TC-WR99ES/WR990

SERVICE MANUAL

US Model
Canadian Model
E Model
TC-WR99ES
AEP Model
TC-WR990

PHOTO:TC-WR990

Dolby noise reduction and HX Pro headroom extension manufactured under license from Dolby Laboratories Licensing Corporation. HX Pro originated by Bang & Olufsen.
"DOLBY", the double-D symbol DD and "HX PRO" are trademarks of Dolby Laboratories Licensing Corporation.

Model Name Using Similar Mechanism	TC-WR97ES/WR970
Tape Transport Mechanism Type	TCM-200R4

SPECIFICATIONS

Recording system: 4-track 2-channel stereo
Fast winding time: Approx. 90 sec. (with Sony C-60 cassette)
Bias: AC bias
Signal-to-noise ratio (at peak level)

Cassette (Dolby NR OFF)	Type IV (Sony Metal-S/Select)	Type II (Sony UX-S)	Type I (Sony HF-S)
	59 dB	58 dB	56dB

Measured at peak level weighted without NR.
The S/N is improved by about 15 dB at 500 Hz and by about 20 dB about 1 kHz with Dolby-C NR on, and by 5 dB at 1 kHz and by 10 dB about 5 kHz with Dolby-B NR on.

Harmonic distortion: 0.4% (with Sony Type I, 160 nWb/m, 315 Hz, 3rd H.D.)
1.8% (with Sony Type IV, 250 nWb/m, 315 Hz, 3rd H.D.)

Frequency response (DOLBY NR OFF)

Type IV cassette (Sony Metal-S/Select)	25 - 19,000 Hz (±3 dB,IEC) 30 - 15,000 Hz [±3 dB (-4 dB) recording]
Type II cassette (Sony UX-S)	25 - 18,000 Hz (±3 dB,IEC)
Type I cassette (Sony HF-S)	25 - 16,000 Hz (±3 dB,IEC)

Wow and flutter: ± 0.09% W.Peak (IEC)
0.06% W.RMS (NAB)
± 0.16% W.Peak (DIN)

Inputs

Line inputs (phono jacks)	Sensitivity	0.16 V
	Input impedance	47 kilohms

Outputs

Line outputs (phono jacks)	Rated output level	0.5 V at a load impedance of 47 kilohms
	Load impedance	Over 10 kilohms
Headphones (stereo phone jack)	Output level	0 — 3 mW at a load impedance of 32 ohms

General

Power requirements:
AEP model :
220 - 230 V AC, 50/60 Hz
US, Canadian model : 120V AC, 60Hz
E model :
120, 220, or 240 V AC adjustable, 50/60 Hz

Power consumption: 30 W

Dimensions:
TC – WR990 :
430 × 135 × 350 mm (w/h/d)
(17 × 5⅜ × 13⅞ inches) including projecting parts and controls
TC-WR99ES:
470 × 135 × 350 mm (w/h/d)
(18⅝ × 5⅜ × 13⅞ inches) including projecting parts and controls

Weight:
TC – WR990 :
6.5 kg (14 lbs 6 oz)
TC-WR99ES:
7.5 kg (16 lbs 9 oz)

Supplied accessories

Audio connecting cords (2)
Wireless remote commander RM-J902 (1) (Except for US/Canadian)
Sony size SUM-3(NS) (2) (Except for US/Canadian)
Screws (M3) (4) (TC-WR99ES only)

Design and specifications subject to change without notice.

Note

This appliance conforms with EEC Directive 87/308/EEC regarding interference suppression.

STEREO CASSETTE DECK

SONY®

TABLE OF CONTENTS

Section	Title	Page
	Specification	1
	Model Identification	2
	Safety Check-out	2
1. GENERAL		
	Identifying the Parts	3
	Hook-up Example	4
2. DISASSEMBLY		5
3. ADJUSTMENTS		
	3-1. Mechanical Adjustment	8
	3-2. Electrical Adjustment	8
4. DIAGRAMS		
	4-1. Block Diagram	12
	4-1-1. Circuit Boards Location	15
	4-2. Printed Wiring Boards	16
	4-3. Schematic Diagram	21
	4-4. Semiconductor Lead Layouts	24
5. EXPLODED VIEWS		29
6. ELECTRICAL PARTS LIST		33

MODEL IDENTIFICATION

— Specification Label —

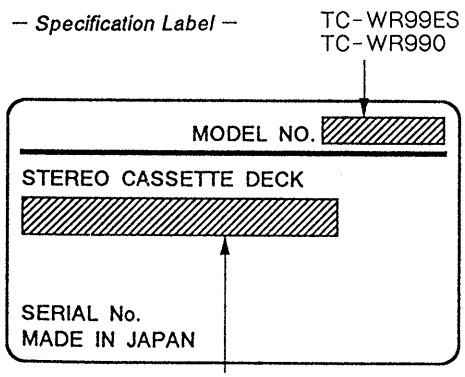

US, Canadian Model : AC : 120V 60Hz 30W
AEP Model : AC : 220 – 230~50/60Hz
E Model : AC : 120, 220, 240V~50/60Hz30W

SAFETY-RELATED COMPONENT WARNING!!

COMPONENTS IDENTIFIED BY MARK ⚠ OR DOTTED LINE WITH MARK ⚠ ON THE SCHEMATIC DIAGRAMS AND IN THE PARTS LIST ARE CRITICAL TO SAFE OPERATION. REPLACE THESE COMPONENTS WITH SONY PARTS WHOSE PART NUMBERS APPEAR AS SHOWN IN THIS MANUAL OR IN SUPPLEMENTS PUBLISHED BY SONY.

SAFETY CHECK-OUT

After correcting the original service problem, perform the following safety check before releasing the set to the customer:
Check the antenna terminals, metal trim, "metallized" knobs, screws, and all other exposed metal parts for AC leakage. Check leakage as described below.

LEAKAGE TEST

The AC leakage from any exposed metal part to earth ground and from all exposed metal parts to any exposed metal part having a return to chassis, must not exceed 0.5 mA (500 microampers). Leakage current can be measured by any one of three methods.

1. A commercial leakage tester, such as the Simpson 229 or RCA WT-540A. Follow the manufacturers' instructions to use these instruments.
2. A battery-operated AC milliammeter. The Data Precision 245 digital multimeter is suitable for this job.
3. Measuring the voltage drop across a resistor by means of a VOM or battery-operated AC voltmeter. The "limit" indication is 0.75 V, so analog meters must have an accurate low-voltage scale. The Simpson 250 and Sanwa SH-63Trd are examples of a passive VOM that is suitable. Nearly all battery operated digital multimeters that have a 2 V AC range are suitable. (See Fig. A)

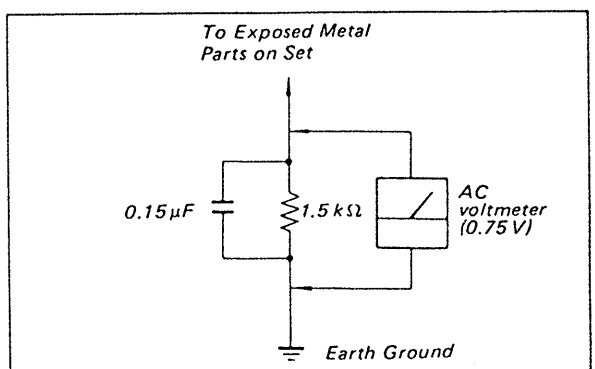

Fig. A. Using an AC voltmeter to check AC leakage.

ATTENTION AU COMPOSANT AYANT RAPPORT À LA SÉCURITÉ!

LES COMPOSANTS IDENTIFIÉS PAR UNE MARQUE ⚠ SUR LES DIAGRAMMES SCHÉMATIQUES ET LA LISTE DES PIÈCES SONT CRITIQUES POUR LA SÉCURITÉ DE FONCTIONNEMENT. NE REMPLACER CES COMPOSANTS QUE PAR DES PIÈCES SONY DONT LES NUMÉROS SONT DONNÉS DANS CE MANUEL OU DANS LES SUPPLÉMENTS PUBLIÉS PAR SONY.

This section is extracted from instruction manual.

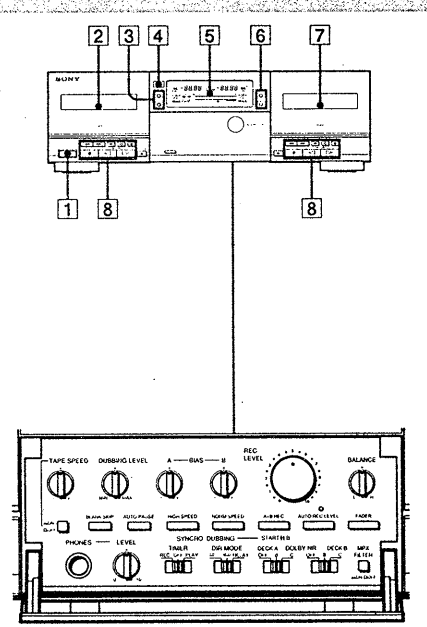

Identifying the Parts

Front Panel

For details, refer to the page number indicated in parenthesis.

(The illustration shows the TC-WR990.)

1 POWER switch
2 Deck A
3 COUNTER buttons (deck A) (36)
RESET button
MEMORY button
4 Remote control sensor
You can remotely control this cassette deck with:
— The supplied remote commander (Except for Canada).
— A remote commander that came with a Sony amplifier or receiver if it has the R mark and cassette deck control capability.
— Any optional Sony remote commander with the R mark and cassette deck control capability.
5 Display panel
6 COUNTER buttons (deck B) (36)
RESET button
MEMORY button
7 Deck B
8 Tape operation buttons
■ (stop) button
◀ (reverse play) button
▶ (forward play) button
◀◀ (leftward fast winding) (Multi-AMS*) button
▶▶ (rightward fast winding) (Multi-AMS*) button
II PAUSE button
O REC MUTE (record muting) button (58)
● REC (recording) button

* AMS is an abbreviation for Automatic Music Sensor.

(Continued on next page.)

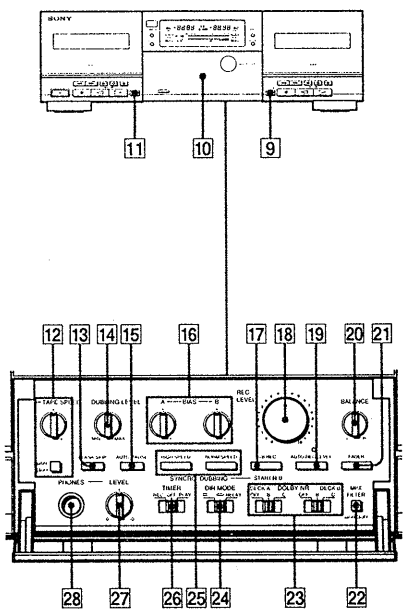

Identifying the Parts

Front Panel

For details, refer to the page number indicated in parenthesis.

(The illustration shows the TC-WR990.)

(Continued from previous page.)

9 ⏏ OPEN/CLOSE button (deck B)
10 Front cover
11 ⏏ OPEN/CLOSE button (deck A)
12 TAPE SPEED control and button (26)
13 BLANK SKIP button (30)
14 DUBBING LEVEL control (66)
15 AUTO PAUSE button (70)
16 BIAS controls (46)
17 A+B REC (simultaneous recording) button (52)
18 REC (recording) LEVEL control (38,44)
19 AUTO REC (automatic recording) LEVEL button and indicator (TC-WR990/WR99ES only) (38)
20 BALANCE control (38)
21 FADER button (TC-WR990/WR99ES only) (60,62)
22 MPX FILTER switch (46)
23 DOLBY NR (Dolby noise reduction) switches (22,28,38,52,56,66)
24 DIR (direction) MODE switch (22,28,38,52,56,66)
25 SYNCHRO DUBBING buttons (66)
HIGH SPEED button
NORM (normal) SPEED button
26 TIMER switch (72)
27 Headphone LEVEL control (24)
28 PHONES (headphones) jack (stereo phone jack)

Hook-up Example

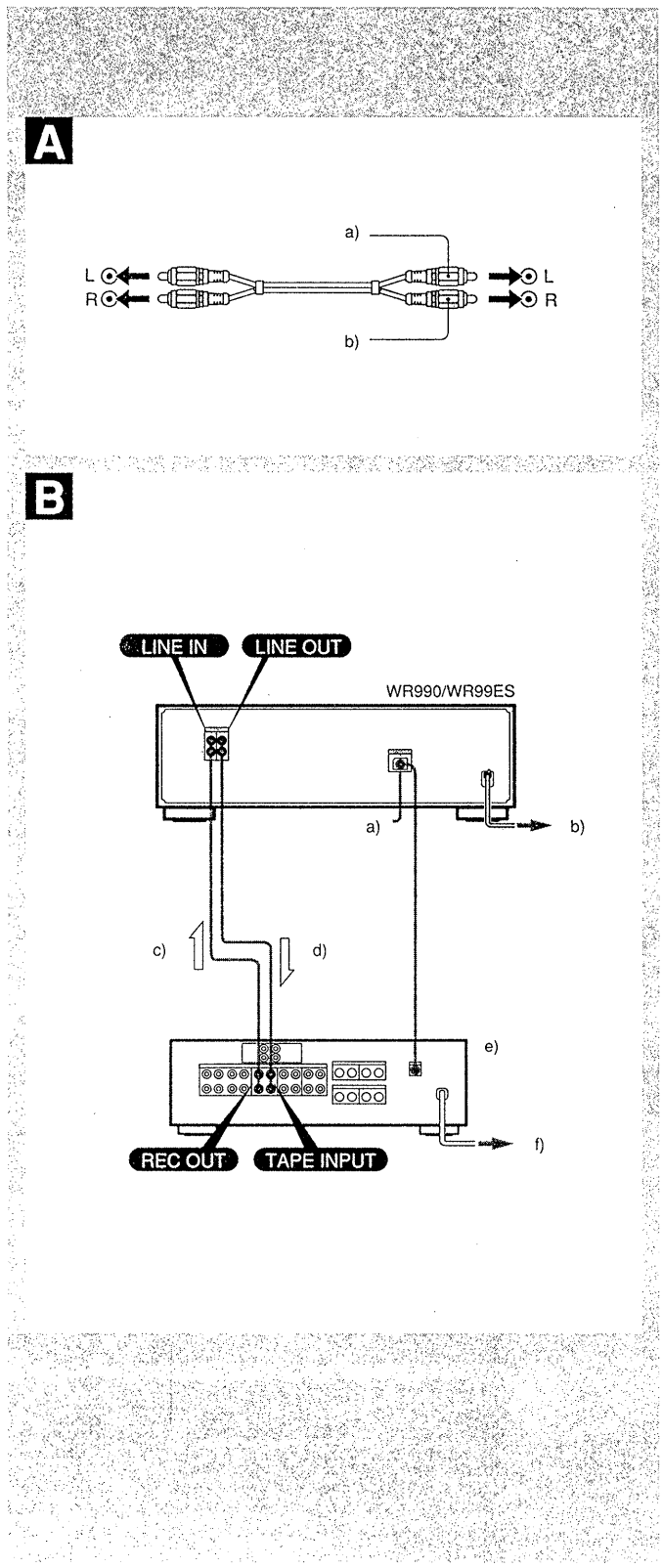

Hooking Up the System

Before You Begin

- Turn off the power to all equipment to be connected before making any connection.
- Note that the red plug of the supplied connecting cord is for right-channel (R) connection and the white plug for left-channel (L) connection.
  See Fig. A .
  a) White
  b) Red
- The connecting cords should be fully inserted into the jacks. A loose connection may cause hum pickup.

Hook-up Example

Fig. B shows how to connect the unit to an amplifier.
a) CONTROL-S input (Canada only)
b) to an AC outlet
c) for recording
d) for playback
e) Amplifier
f) To a wall outlet

The arrow ⇦ shows the direction of the signal flow.

Note
Parts on the back panel will differ depending on the model.

Note on the CONTROL-S input
To remote control this unit through a receiver or amplifier, connect the input on this unit to the CONTROL-S output on a Sony receiver or amplifier, with a CONTROL-S cable. When this connection is used, only remote commands sent through the receiver or amplifier will be executed. The remote sensor on this unit will not function.

SECTION 2
DISASSEMBLY

Note: Follow the disassembly procedure in the numerical order given.

Unscrew four screws (M3 × 8) and remove the upper case.

DOLBY BOARD, MAIN BOARD

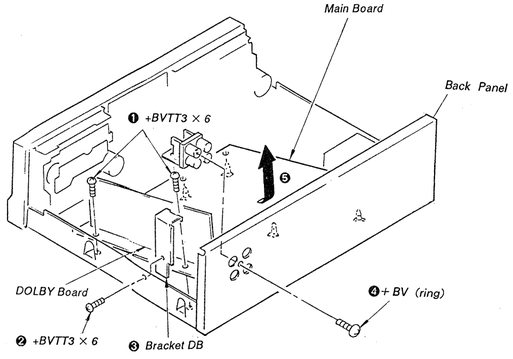

MECANISM

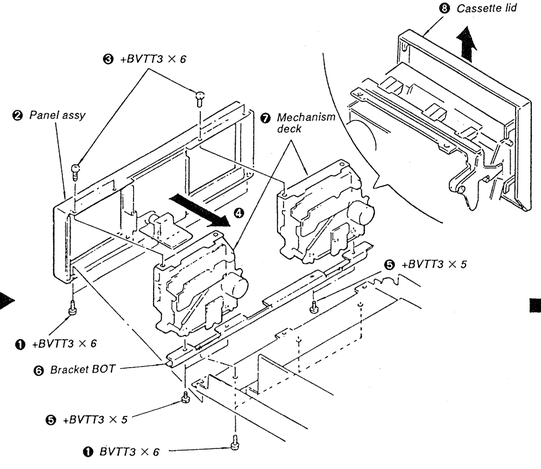

CASSETTE HOLDER

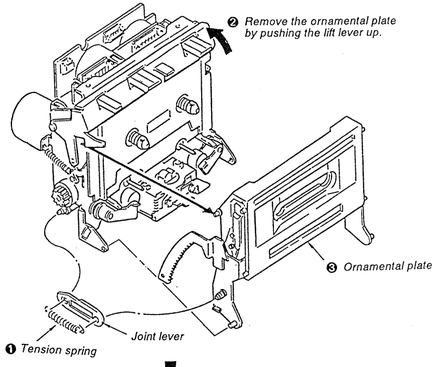

ORNAMENTAL PLATE

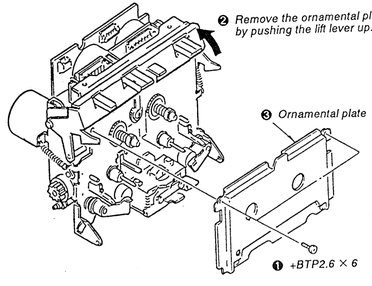

CAPSTAN PLATE, FLYWHEEL

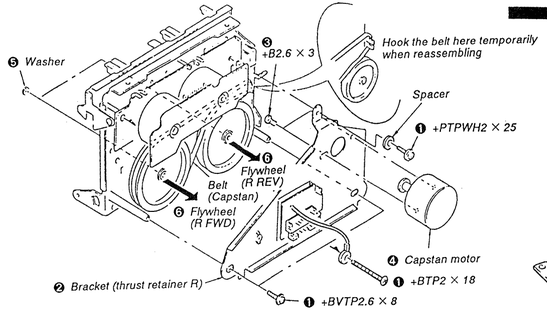

PINCH LEVER, HEAD

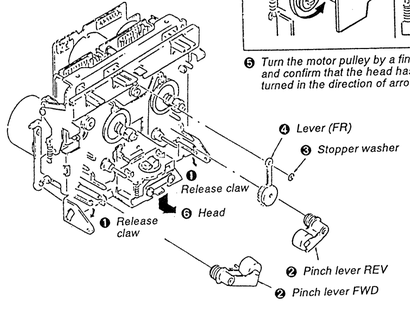

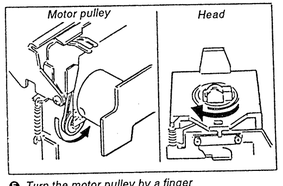

❺ Turn the motor pulley by a finger and confirm that the head has turned in the direction of arrow.

REEL AND ASSIST MOTORS

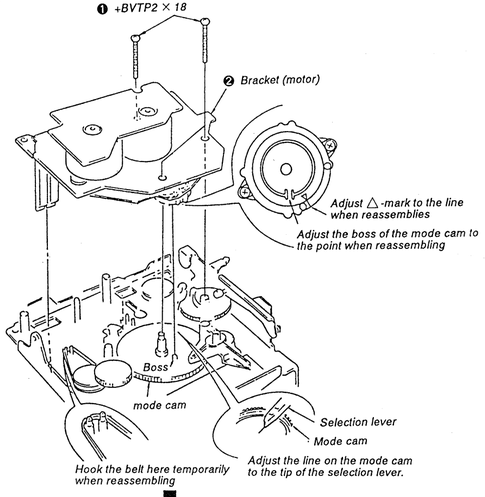

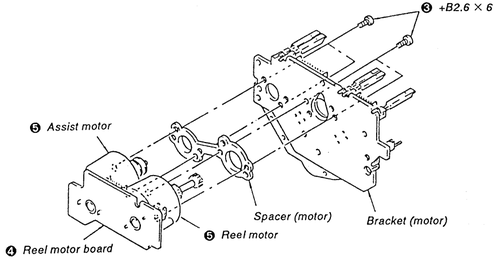

SECTION 3
ADJUSTMENTS

3-1. MECHANICAL ADJUSTMENTS

PRECAUTION

1. Clean the following parts with a denatured-alcohol-moistened swab :
   record/playback head — pinch roller
   erase head — rubber belts
   capstan — idler
2. Demagnetize the record/playback head with a head demagnetizer.
3. Do not use a magnetized screwdriver for the adjustments.
4. After the adjustments, apply suitable locking compound to the parts adjusted.
5. The adjustments should be performed in the rated power supply voltage unless otherwise noted.

Torque Measurement

Torque	Torque meter	Meter reading
FWD	CQ-102C	30 – 60g·cm (0.42 – 0.83oz·inch)
FWD Back tention	CQ-102C	1 – 5g·cm (0.014 – 0.063oz·inch)
REV	CQ-102RC	30 – 60g·cm (0.42 – 0.83oz·inch)
REV Back tention	CQ-102RC	1 – 5g·cm (0.014 – 0.063oz·inch)
FF, REW	CQ-201B	65 – 90 g·cm (0.90 – 1.25 oz·inch)

3-2. ELECTRICAL ADJUSTMENT

Note : The adjustment should be performed in the order given in the service manual. As a rule, adjustments about playback should be performed before those about recording. The adjustments should be performed for both L-CH and R-CH.

- Switches and controls should be set as follows unless otherwise specified.
  DOLBY NR switch : OFF
  DIRECTION switch : ⇄
  TIMER switch : OFF
  MPX FILTER switch : OFF
- Standard Record :
  Deliver the standard input signal level to the input jack and set the REC LEVEL control to obtain the standard output signal level.

–Record Mode–

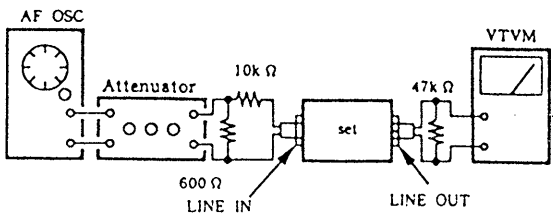

0 dB = 775mV

Standard Input Level

input terminal	LINE IN
source impedance	10k Ω
input level	0.5V (– 3.8dB)

Standard Output Level

output terminal	LINE OUT
load impedance	47k Ω
output level	0.5V (– 3.8dB)

Test tape

Type	Signal	Used for
P-4-A100	10kHz, –10dB	Azimuth Adjustment
P-4-L300	315Hz, 0dB	PB Level Adjustment
WS-48B	3kHz, 0dB	Tape Speed Adjustment

The set will get into TEST MODE by shorting the pins of TP801 (TEST) on Main board before turning the power on, and TEST MODE functions as follows :

1. High speed playback
   Pressing HIGH SPEED (DUBBING) button while playback changes to high speed playback and another press of the button returns the set to normal speed playback.
2. Record memory stop
   When starting recording, tape counter is reset to zero and counter memory turned on.

Record/Playback Head Azimuth Adjustment

DECK A | DECK B

Procedure :

1. Mode : FWD playback

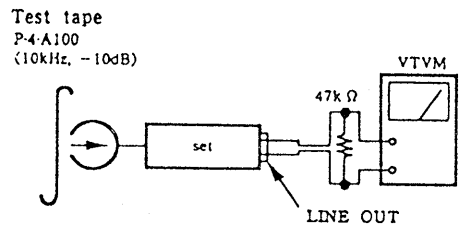

2. Turn the adjustment screw for the maximum output levels. If these levels do not match, turn the adjustment screw until both of output levels match together within 1dB.

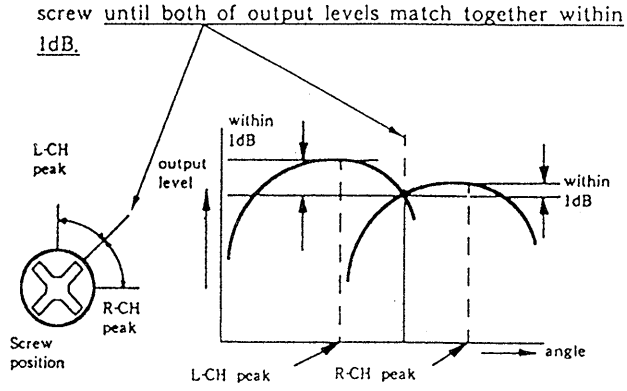

3. Phase Check
   Mode : playback

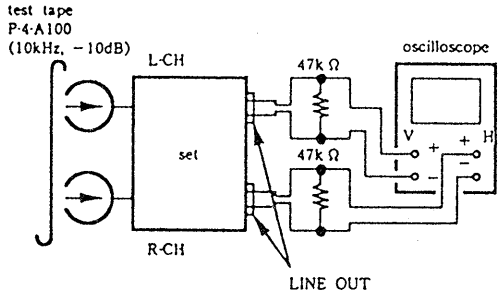

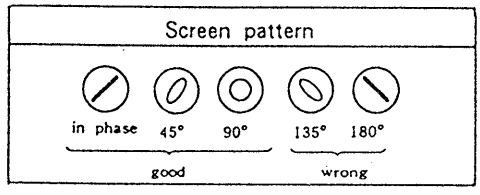

4. Set in the REV mode and repeat the step 1-3.
5. After the adjustment, lock the screws with locking compound.

Adjustment Location : Record/Playback head

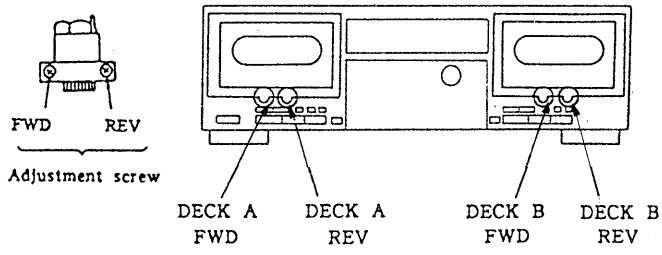

Tape Speed Adjustment DECK A DECK B

Procedure :
Mode : playback

Perform high speed adjustment before mormal speed adjustment

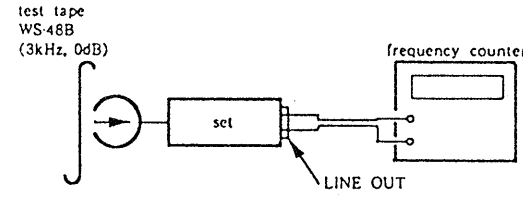

(high speed adjustment)

1. Short test pin TP801 (TEST) on Main board.
2. Set to FWD playback mode.
3. Press the HIGH SPEED DUBBING switch.
4. Adjust RV871 (DECK A) and RV881 (DECK B) on Main board so that the frequency counter reading becomes 6,000 ± 30Hz.
5. After adjustment, disconnect TP801 shorted in step 1.

(normal speed adjustment)

1. Set to FWD playback mode.
2. Adjust RV872 (DECK A) and RV882 (DECK B) on Main board so that the frequency counter reading becomes 3,000 ± 15Hz.

Frequency difference between the begining and the end of the tape should be within 5%.
Frequency difference between deck A and deck B should be within 20 Hz (high speed) or 10 Hz (normal speed).

Adjustment Location: Main board

Pitch Control Speed Adjustment DECK A

1. Set TAPE SPEED (RV901) to the center and turn on S902.
2. Play back DECK A FWD and adjust rv891.
   Adjustment value : 3000Hz ± ISHz
   A, Bdeviation within 10Hz
   Speed difference : VOL MAX 32SOHz ± 70Hz
   : VOL MIN 2710Hz ± 70Hz

Adjustment Location : Main board

Playback Level Adjustment DECK A DECK B

Procedure :

Mode : playback

test tape
P・4・L300
(315Hz, 0dB)

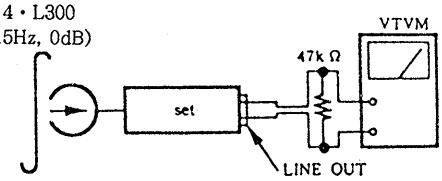

Adjust RV131 (L-ch) and RV231 (R-ch) for DECK A and RV151 (L-ch) and RV251 (R-ch) for DECK B so that the reading on VTVM meter the adjustment limits below.

Adjustment Limits :

LINE OUT level : −8.2dB to −7.2dB (0.301 to 0.338V)

Level difference between channels : less than 0.5dB

Check that the LINE OUT level does not change even if Playback and Stop operation is repeated several times.

Adjustment Location : MAIN board

Bias Current Adjustment

Procedure :

1. Set RV121 and RV221 (DECK A), RV141 and RV241 (DECK B) to mechanical center and turn the set recording mode.
2. Connect digital voltmeter as shown by the following table.
3. Adjust the following transformers for the minimum readings on the digital voltmeter.

DECK		Mesurement Point	Adjustment	Value
A	L	① and ②, TP521	T121	less than 80 mV
	R	② and ③, TP521	T221	
B	L	① and ②, TP541	T141	
	R	② and ③, TP541	T241	

Adjustment Location : MAIN board

Record Bias Adjustment DECK A DECK B

Setting :

REC LEVEL control : standard Record (See page 8.)

test pin TP801 : short

Procedure :

1. Mode : record

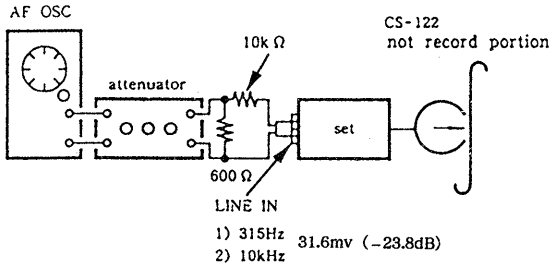

2. Mode : playback

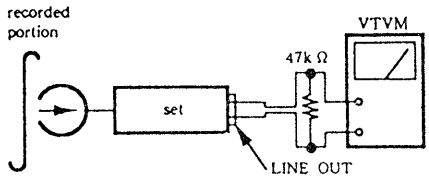

Playback the signal recorded in step 1.

Confirm that the 10kHz playback output is 0 ± 0.5dB relative to the 315Hz output. If necessary, adjust RV121 (L-ch) and RV221 (R-ch) for DECK A and RV141 (L-ch) and RV241 (R-ch) for DECK B, and repeat the steps given above.

Adjustment Location : MAIN board

Record Level Adjustment DECK A DECK B

Setting :

REC LEVEL control : Standard Record (See page 8.)

test pin TP801 : short

Procedure :

1. Mode : record

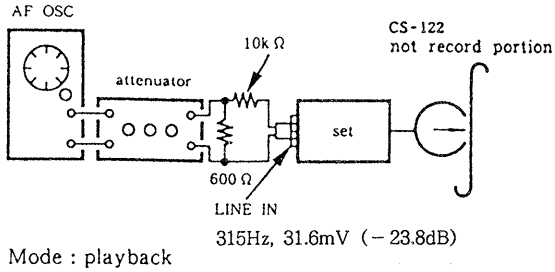

2. Mode : playback

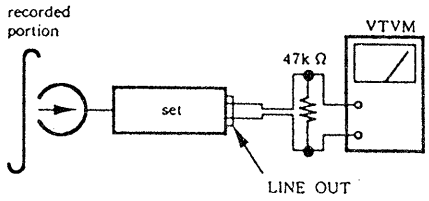

3. Playback the signal recorded in step1.

Confirm that the signal level is within the adjustment limits below. If necessary, adjust RV301 (L-ch) and RV401 (R-ch) for DECK A and RV351 (L-ch) and RV451 (R-ch) for DECK B, and repeat the step1-2.

Adjustment Limits: −23.8dB ± 0.5dB (29 to 33.4mV)

Adjustment Location: Main board

Quick Reverse Sensitivity Adjustment DECK A DECK B

Conditions :

DIRECTION MODE switch : ⇄

Adjustment procedure :

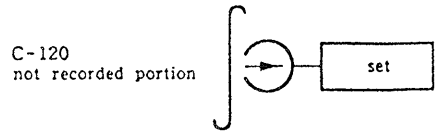

1. Connect the digital voltmeter to test point TP802 (DECK A) / TP803 (DECK B).
2. Load C-120 tape cassette and playback the leading portion in FWD mode.
3. Adjust the RV841 (DECK A), RV831 (DECK B) for 4.5 ± 0.5V reading on the digital voltmeter.
4. Playback C-120 tape cassette in FWD mode again.
5. Confirm that the reading on the digital voltmeter is "L" level at the magnetic portion of the tape.
6. Confirm that the tape stop around the tape end (boder of the leading and the magnetic portions).

Adjustment Location : MAIN board

Adjustment Parts Location Diagram(Component side)

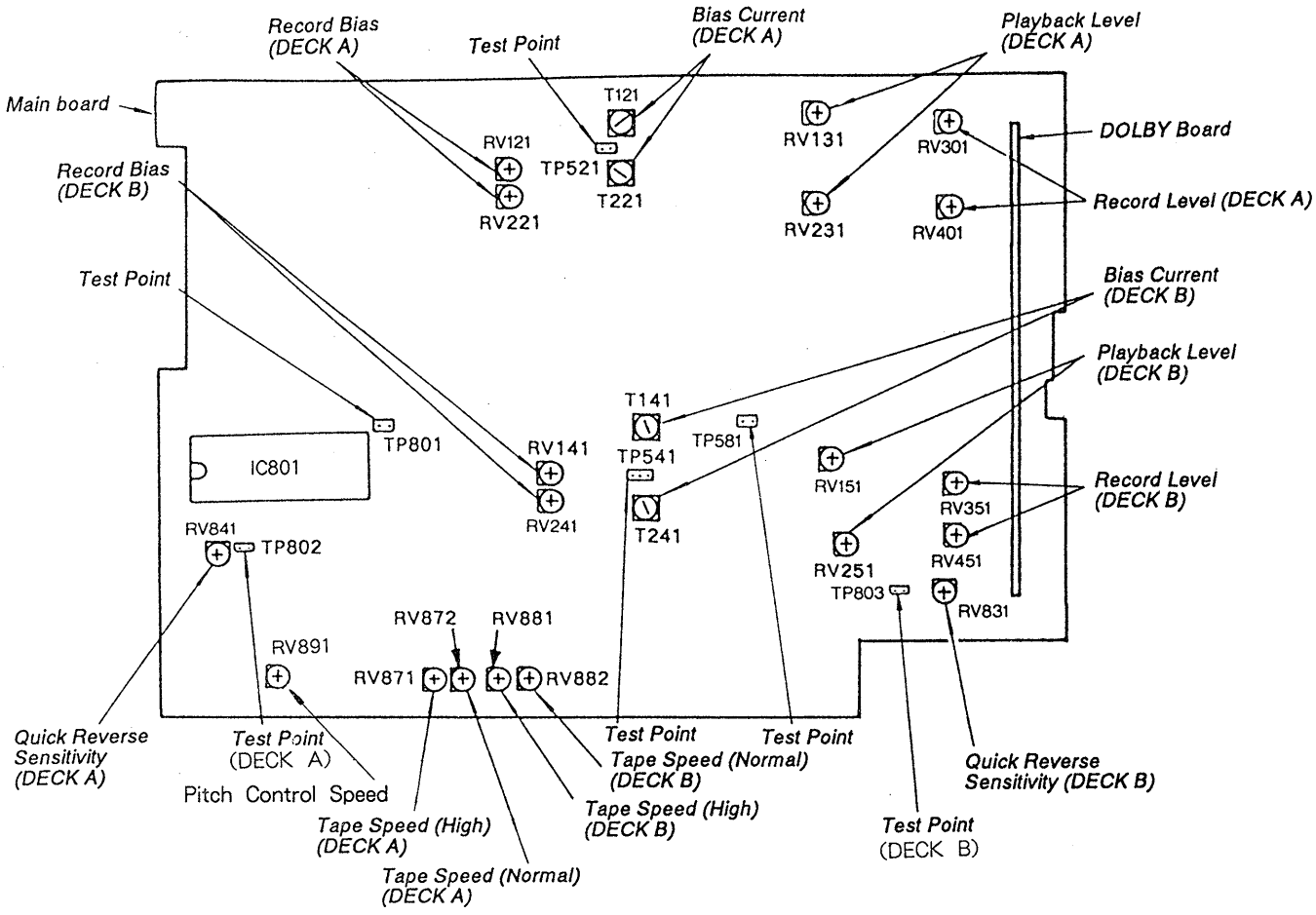

SECTION 4
DIAGRAMS

4-1. BLOCK DIAGRAM

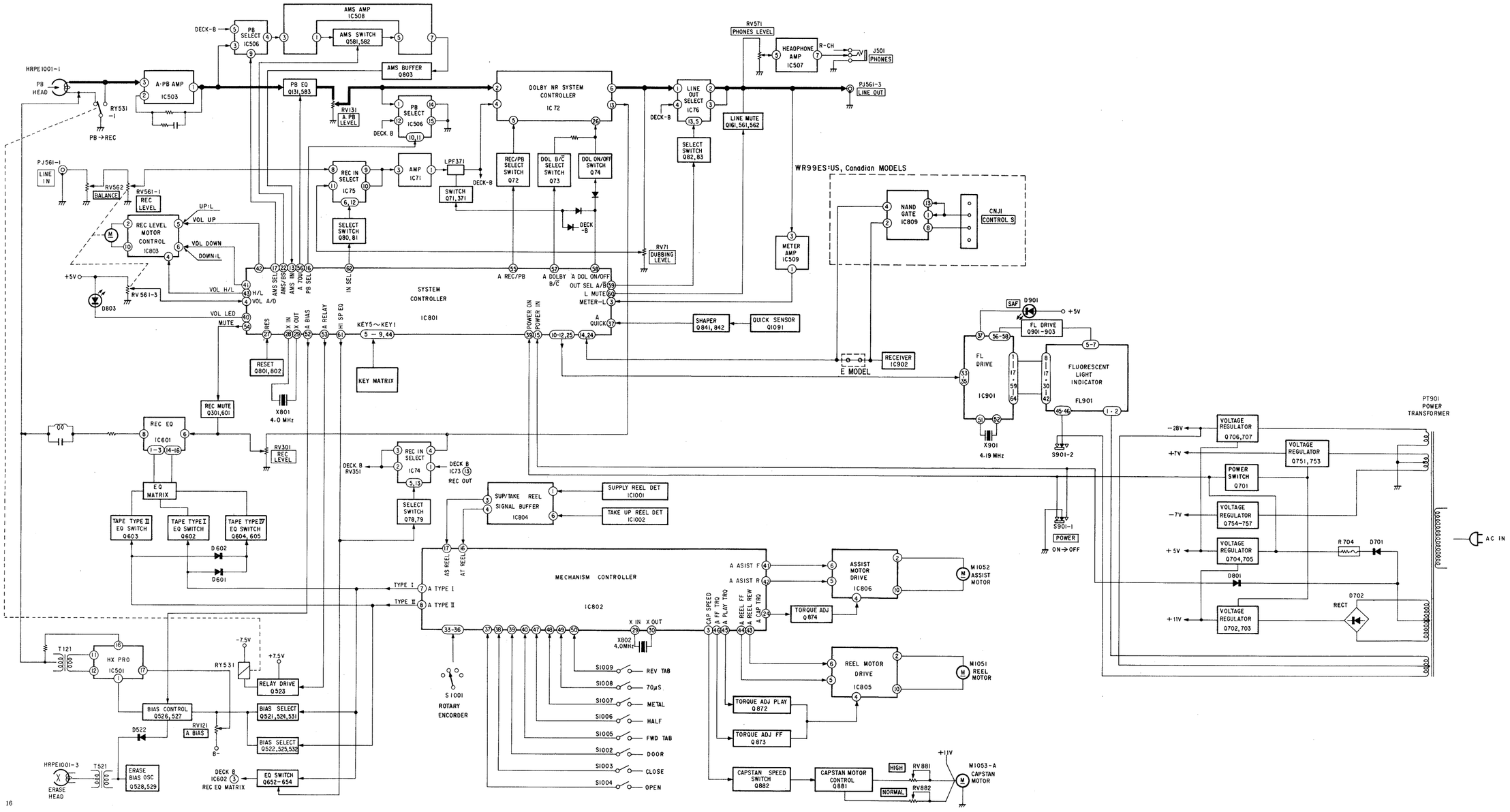

4-1-1. Circuit Boards Location

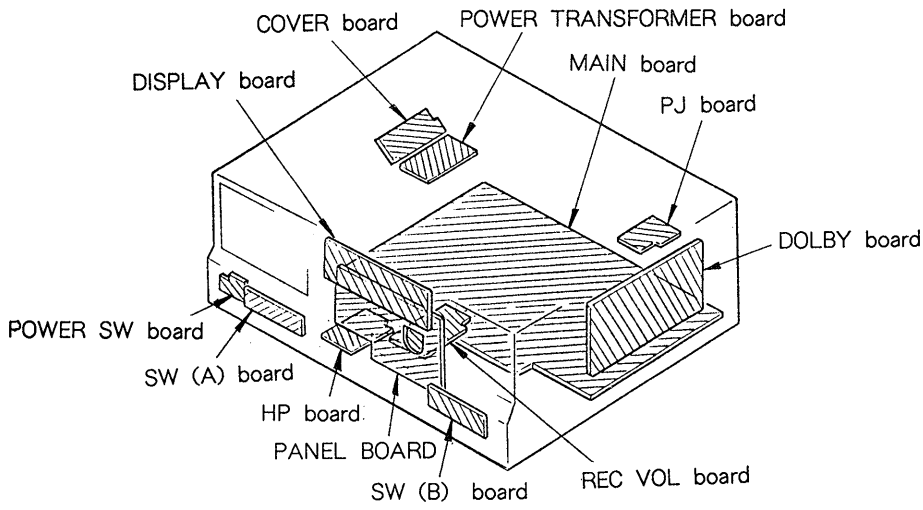

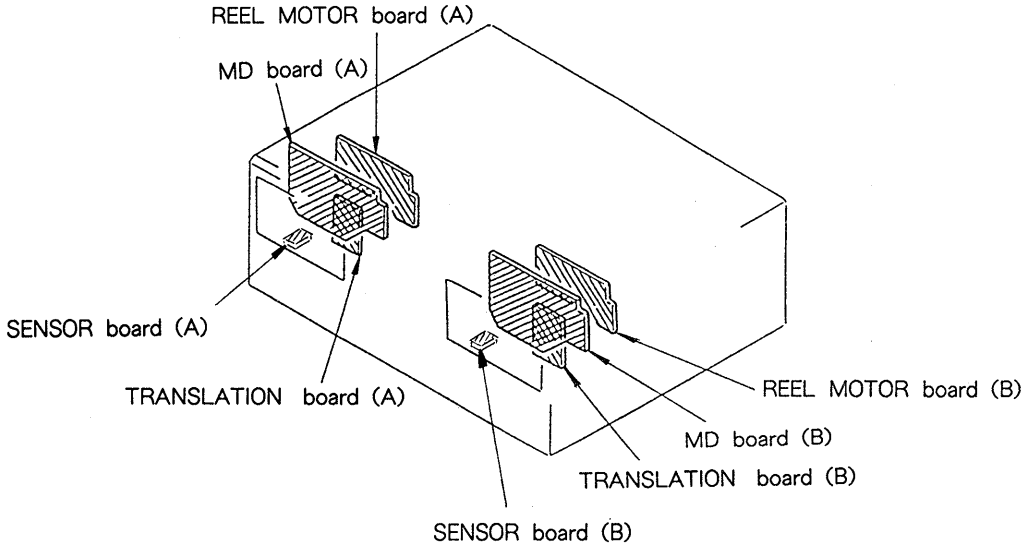

4-2. PRINTED WIRING BOARDS -See Page 15 for Circuit Boards location, Page 24 for Semiconductor Lead Layouts.

● Semiconductor Location

Ref. No.	Location	Ref. No.	Location	Ref. No.	Location
D71	F-2	IC602	H-8	D546	F-14
D72	F-2	IC603	F-8	D547	F-13
D73	A-2	IC801	G-17	D548	H-13
D74	N-2	IC802	H-16	D549	H-13
D75	G-2	IC803	F-18	D551	G-14
D76	H-2	IC804	J-14	D552	G-14
D191	D-8	IC805	H-18	D553	H-9
D291	E-8	IC806	I-18	D561	E-7
D521	C-12	IC807	I-12	D562	E-7
D522	B-15	IC808	J-10	D581	F-15
D541	D-12	IC809	C-16	D582	E-9
D542	H-13	IC901	E-24	D601	B-8
D561	E-7	IC902	F-21	D602	C-7
D601	D-8	IC1001-A	J-22	D603	D-7
D602	D-8	IC1001-B	J-30	D604	C-8
D701	B-17	IC1002-A	J-23	D605	C-7
D702	B-16	IC1002-B	J-31	D651	I-7
D703	E-14			D652	G-8
D704	E-13	Q71	F-2	D653	G-9
D705	B-17	Q72	A-2	D654	G-9
D706	E-14	Q73	B-2	D701	E-14
D707	D-17	Q74	B-2	D702	E-14
D708	D-17	Q75	G-2	D703	I-14
D751	B-16	Q76	H-2	D704	I-14
D752	B-16	Q77	H-2	D705	E-15
D753	B-17	Q78	F-3	D706	D-17
D754	B-17	Q79	F-3	D707	D-17
D755	E-13	Q80	E-4	D751	D-12
D756	E-13	Q81	D-4	D752	D-12
D757	D-12	Q82	D-4	D753	D-12
D758	E-13	Q83	D-4	D754	E-12
D801	I-18	Q131	B-10	D755	E-12
D802	F-19	Q151	G-10	D756	E-13
D804	H-17	Q161	D-7	D757	E-12
D805	H-17	Q231	C-10	D801	G-16
D831	F-16	Q251	H-10	D802	G-17
D841	F-18	Q261	E-7	D803	F-19
D890	B-16	Q301	B-8	D831	F-17
D891	B-17	Q351	G-8	D832	I-7
D892	J-16	Q371	E-2	D841	F-17
D893	J-15	Q401	C-8	D842	G-19
D894	J-17	Q451	H-8	D871	J-16
D895	J-18	Q471	E-2	D872	H-17
D901	B-27	Q521	C-15	D873	I-17
		Q522	C-15	D874	I-18
IC71	E-3	Q523	C-12	D875	J-18
IC72	B-3	Q524	B-15	D876	J-16
IC73	B-3	Q525	C-15	D877	J-16
IC74	F-3	Q526	B-14	D878	J-15
IC75	D-2	Q527	B-14	D879	J-17
IC76	C-4	Q528	B-15	D881	J-14
IC501	C-14	Q529	B-15	D882	J-14
IC502	G-16	Q531	C-16	D883	J-12
IC503	B-11	Q532	C-16	D884	J-12
IC504	G-10	Q533	B-9	D885	J-11
IC506	E-10	Q541	G-14	D901	F-25
IC507	I-3	Q542	G-14	D902	F-26
IC508	E-9	Q543	F-11	D903	F-25
IC509	E-8	Q544	G-14	D1091-A	G-23
IC601	B-8	Q545	G-14	D1091-B	G-31

Note:
● ○——— : parts extracted from the component side.

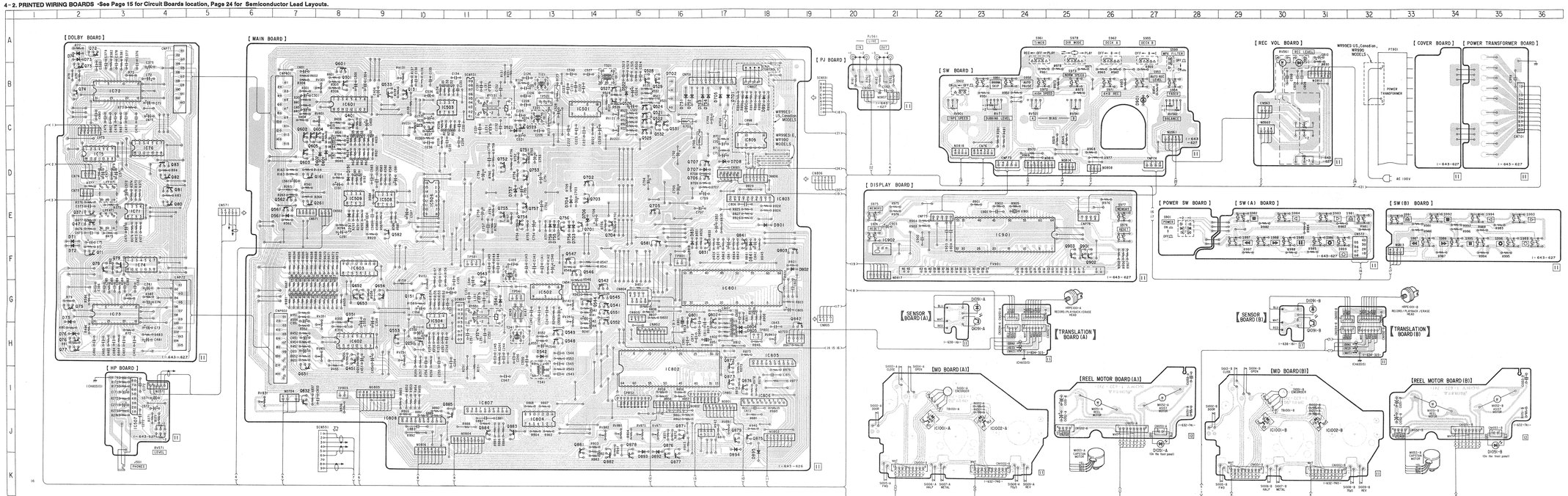

4-3. SCHEMATIC DIAGRAM

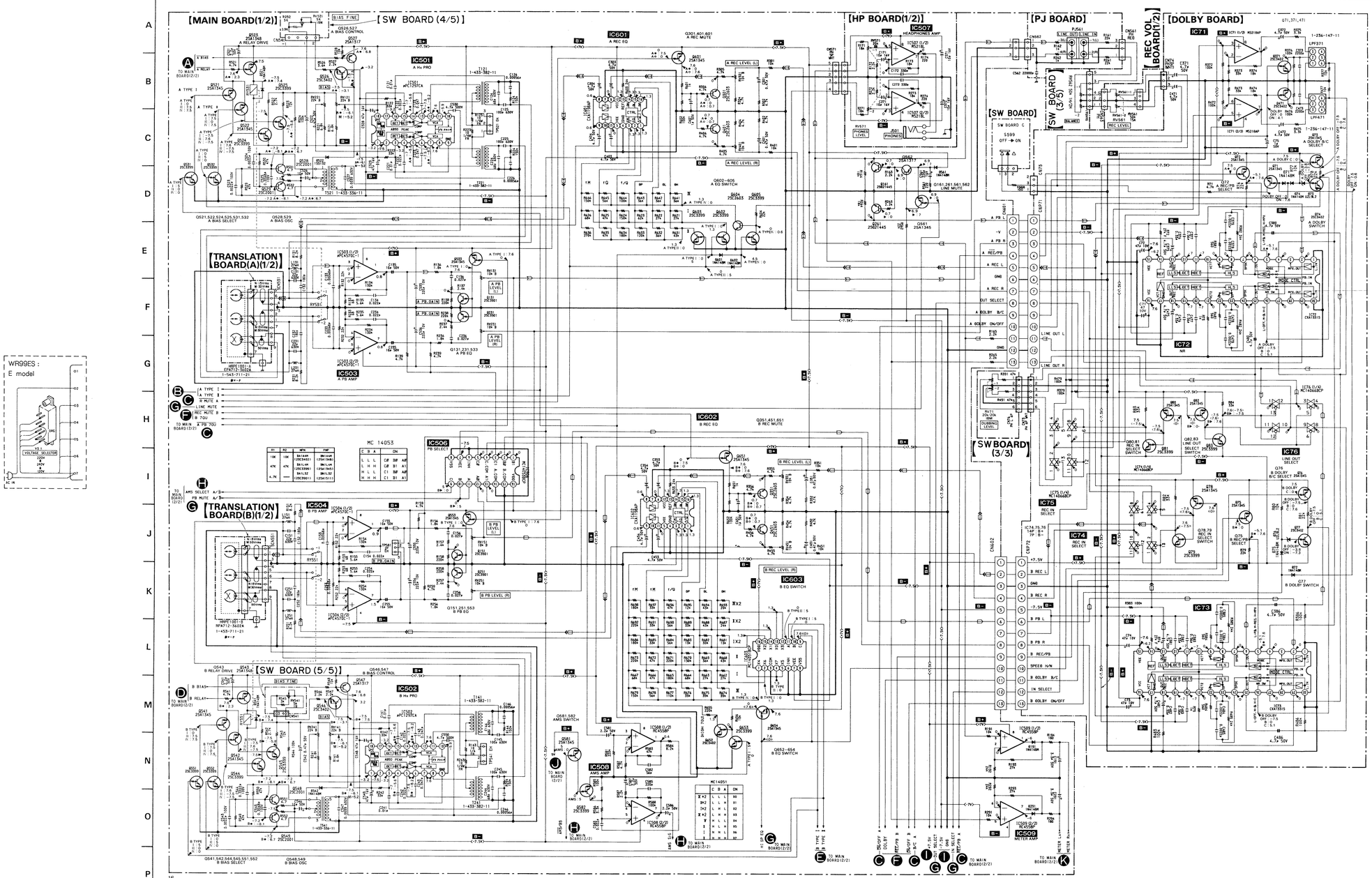

Note:
- All capacitors are in μF unless otherwise noted. pF: μμF 50WV or less are not indicated except for electrolytics and tantalums.
- All resistors are in Ω and ⅙ W or less unless otherwise specified.
- △ : internal component.
- ▭ : fusible resistor.

Note:	Note:
The components identified by mark ⚠ or dotted line with mark ⚠ are critical for safety. Replace only with part number sppecified.	Les composants identifiés par une marque ⚠ sont critiques pour la sécurité. Ne les remplacer que par une pièce portant le numéro spécifié.

- B+ : B + Line
- B− : B − Line
- ▭ : adjustment for repair.
- Voltage and waveforms are dc with respect to ground under no-signal conditions.
  no mark : STOP
  < > : NORMAL SPEED DUBBING
  ≪ ≫ : HIGH SPEED DUBBING
- ▶ : FWD ◀ : REV
- Voltages are taken with a VOM (input impedance 10 MΩ). Voltage variations may be noted due to normal production tolerances.
- Signal path.
  : PB(DECK A)
  : REC(DECK A)
  : PB(DECK B)
  : REC(DECK B)

4-4. Semiconductor Lead Layouts

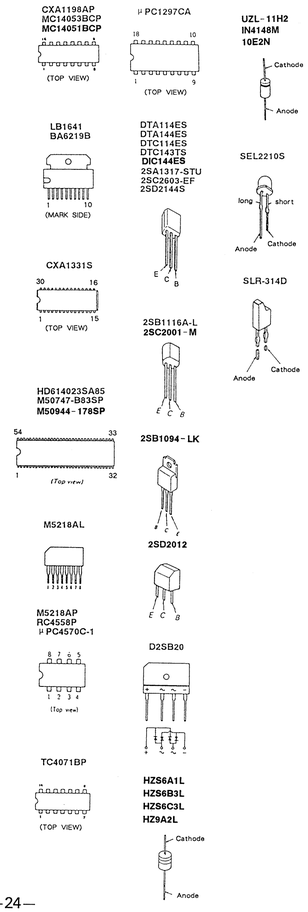

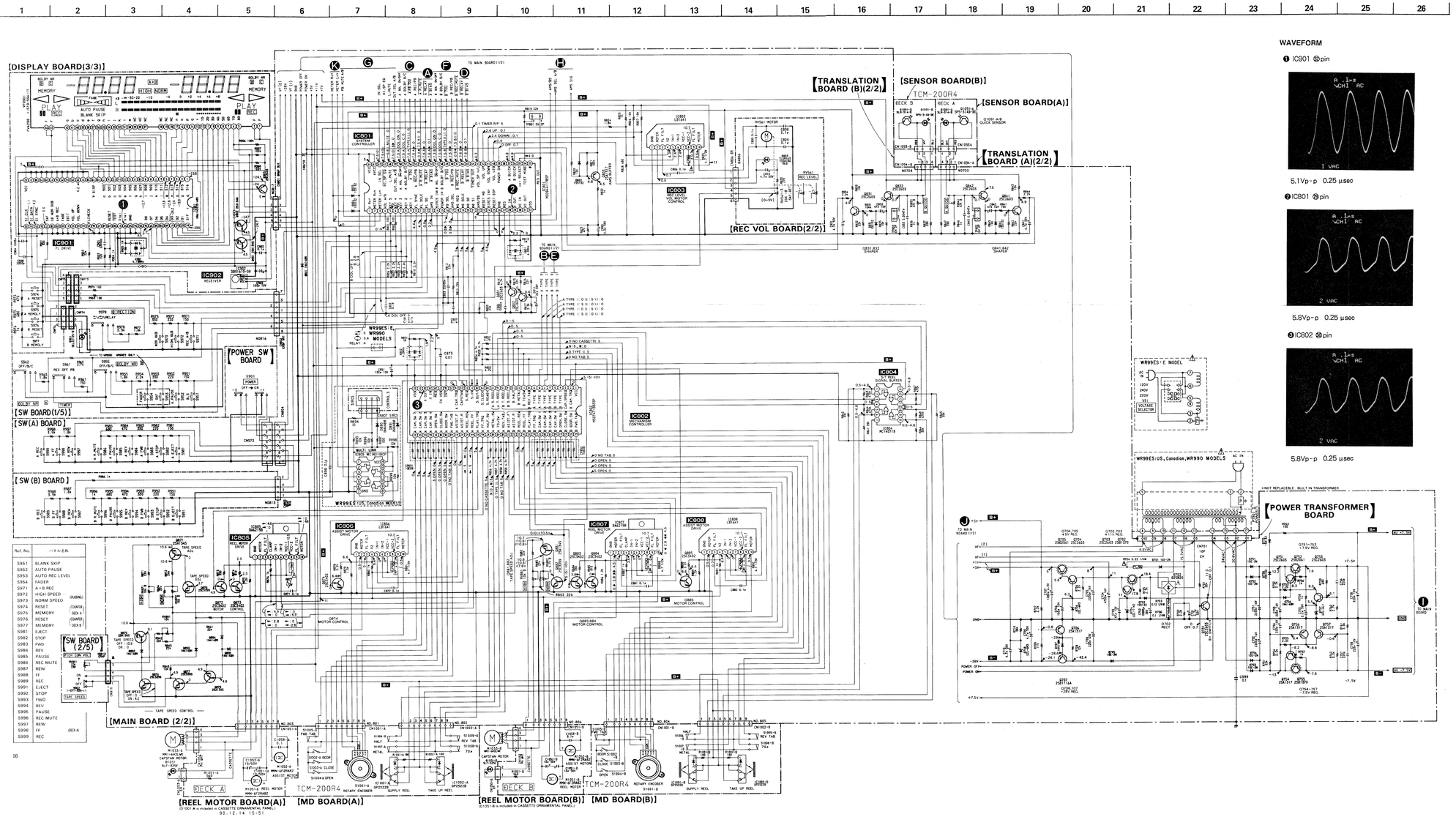

WAVEFORM

❶ IC901 ㉘pin

5.1Vp-p 0.25 μsec

❷ IC801 ㊸pin

5.8Vp-p 0.25 μsec

❸ IC802 ㊷pin

5.8Vp-p 0.25 μsec

• VFD901 Internal Connection

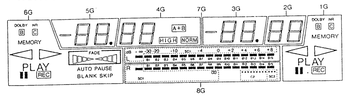

ANODE CONNECTION

	8G	7G	6G	5G	4G	3G	2G	1G
a	SC1	SC1	DOLBY NR	a	a	a	a	DOLBY NR
b	(B1)	(B1)		b	b	b	b	
c	(B4)	(B4)		c	c	c	c	
d	(B5)	(B5)	PLAY	d	d	d	d	PLAY
e	(B5)	(B5)		e	e	e	e	
f	(B2)	(B2)		f	f	f	f	
g	(B3)	(B3)	MEMORY	g	g	g	g	MEMORY
h	(B7)	(B7)						
i	(B8)	(B8)	REC	i	i	i	i	REC
j	(B9)	(B9)	FADER	j	j	j	j	
k	(B12)	(B12)		k	k	k	k	
l	(B14)	(B14)	BLANK SKIP	l	l	l	l	
m	(B13)	(B13)	AUTOPAUSE	m	m	m	m	
n	(B10)	(B10)		n	n	n	n	
o	(B11)	(B11)		o	o	o	o	
p	(B15)	(B15)	• (DP)	A+B	• (DP)			
q	SC3			HIGH				
r	SC2			NORM				

• IC Block Diagram

IC805, 807 BA6219B

IC803, 806, 808 LB1641

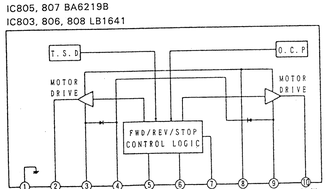

SECTION 5
EXPLODED VIEWS

NOTE:

- −XX, −X mean standardized parts, so they may have some differences from the original one.
- Color Indication of Appearance Parts
  Example :
  KNOB, BALANCE (WHITE)...(RED)
  ↑ Parts color ↑ Cabinet's color
- Items marked "*" are not stocked since they are seldom required for routine service. Some delay should be anticipated when ordering these items.
- The mechanical parts with no reference number in the exploded views are not supplied.
- Hardware (# mark) list is given in the last of this parts list.

The components identified by mark ⚠ or dotted line with mark ⚠ are critical for safety.
Replace only with part number specified.

Les composants identifiés par une marque ⚠ sont critiques pour la sécurité.
Ne les remplacer que par une pièce portant le neméro spécifié.

(1) CASE, FRONT PANEL SECTION

▲A : SW (A) BOARD
▲B : POWER SW BOARD
▲C : FL BOARD
▲D : HP BOARD
▲E : SW (B) BOARD
▲F : REC VOL BOARD

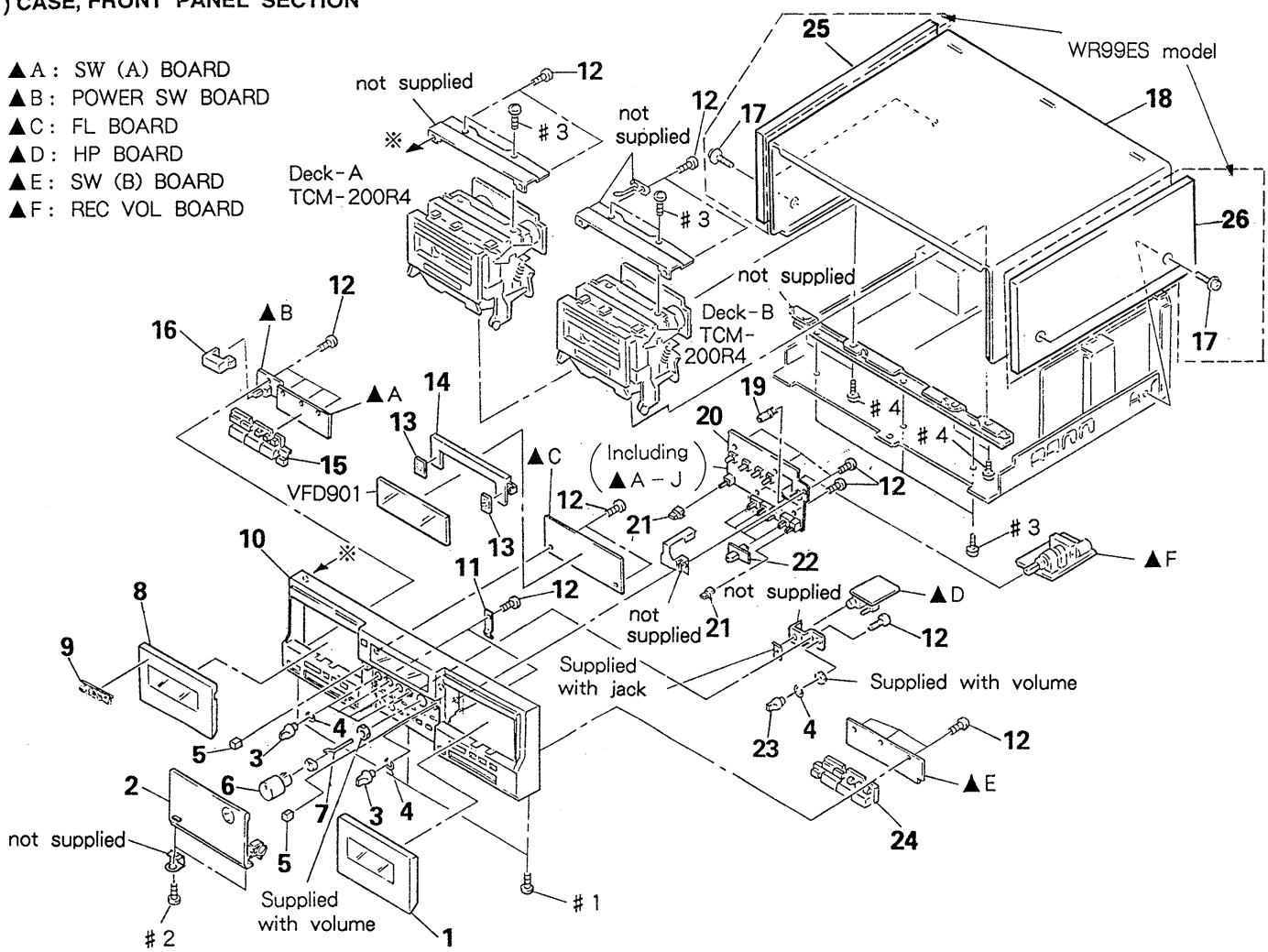

Ref. No.	Part No.	Description	Remarks
1	X-3364-899-1	LID (B) ASSY, CASSETTE	
2	X-3364-888-1	LID (M) ASSY (WR99ES)	
2	X-3364-901-1	LID (M) ASSY (WR990)	
3	3-354-931-11	KNOB (DIA.10)	
4	3-354-981-01	SPRING (SUS), RING	
5	3-322-044-01	SPACER, RUBBER	
6	3-329-983-01	KNOB (REC)	
7	4-922-979-01	INDICATOR	
8	X-3364-898-1	LID (A) ASSY, CASSETTE	
9	4-908-848-01	EMBLEM, SONY	
10	X-3364-919-1	PANEL ASSY, FRONT (WR99ES:US,Canadian)	
10	X-3364-920-1	PANEL ASSY, FRONT (WR99ES:E, WR990)	
11	3-378-283-01	SPRING (M)	
12	4-928-635-01	SCREW, +BV (2.6X8) TAPPING	
13	9-911-844-XX	CUSHION	

Ref. No.	Part No.	Description	Remarks
14	3-365-420-01	HOLDER, FL TUBE	
15	3-378-303-01	BUTTON (CONTROL)	
16	3-354-932-01	BUTTON (POWER)	
17	3-704-366-01	SCREW(CASE)(M3×8)	
17	4-933-446-01	SCREW (SIDE PANEL)(WR99ES)	
18	4-925-039-61	CASE	
19	* 3-362-478-11	HOLDER (T), LED	
20	* A-2006-726-A	PANEL BOARD, COMPLETE	
21	3-378-285-01	BUTTON (CORNER 4)	
22	4-924-444-01	KNOB (TIMER)	
23	3-354-931-01	KNOB (DIA.10)	
24	3-378-303-11	BUTTON (CONTROL)	
25	X-3364-889-1	PANEL (L) ASSY, SIDE(WR99ES)	
26	X-3364-890-1	PANEL (R) ASSY, SIDE(WR99ES)	
VFD901	1-519-594-11	INDICATOR TUBE, FLUORESCENT	

(2) CHASSIS SECTION

▲G : COVER BOARD
▲H : POWER TRANSFORMER BOARD
▲ I : DOLBY BOARD
▲J : PJ BOARD

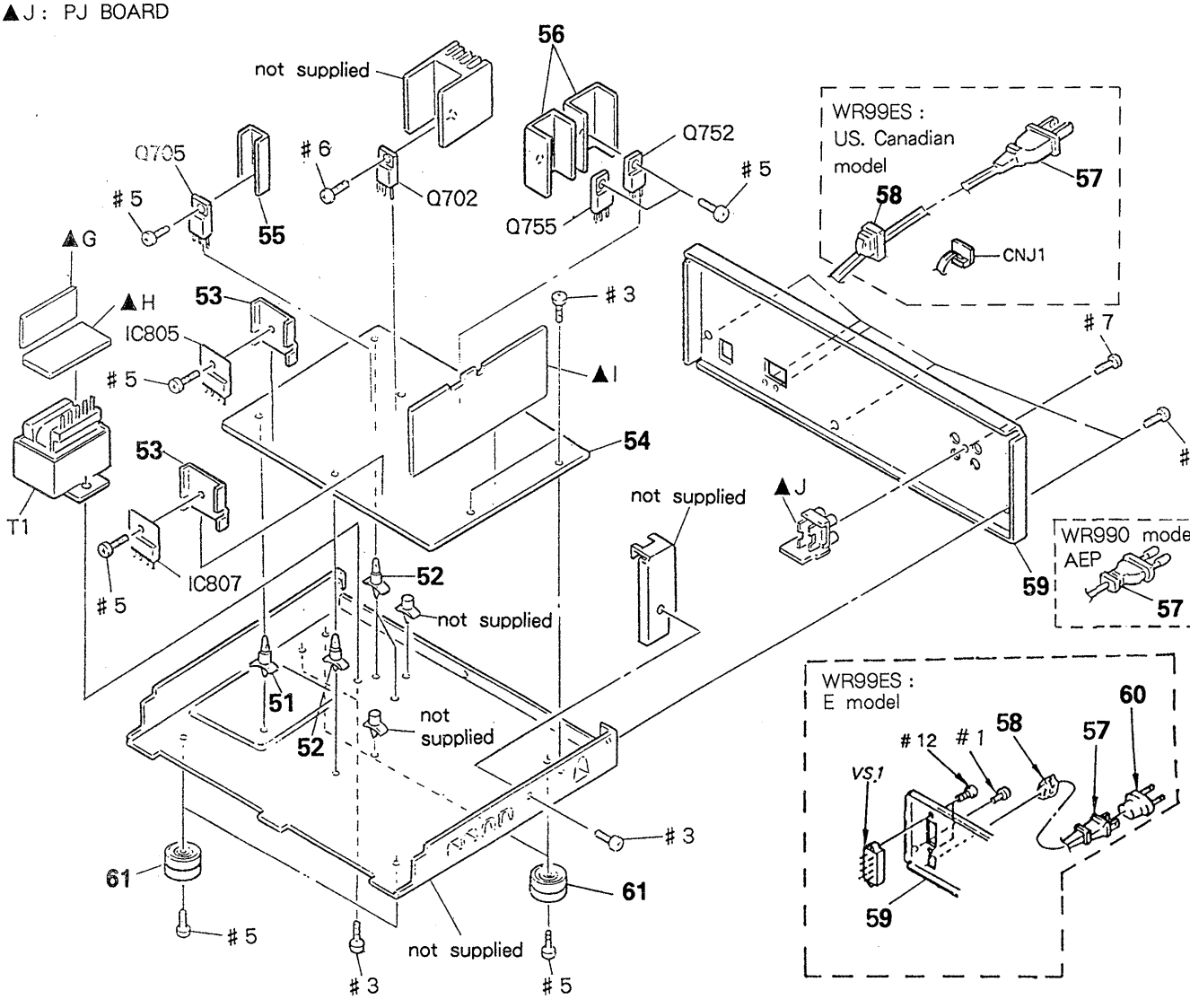

Ref. No.	Part No.	Description	Remarks
51	* 4-924-098-11	HOLDER, PC BOARD	
52	* 3-346-265-11	HOLDER, PC BOARD	
53	* 3-356-925-01	HEAT SINK	
54	* A-2006-725-A	MAIN BOARD, COMPLETE	(WR99ES:E, WR990)
54	* A-2006-727-A	MAIN BOARD, COMPLETE	(WR99ES:US, Canadian)
55	* 3-309-144-21	HEAT SINK	
56	* 4-880-403-11	HEAT SINK	
57	⚠ 1-551-188-XX	CORD, POWER	(WR99ES:E)
57	⚠ 1-555-795-00	CORD, POWER EULO PLUG	(WR990)
57	⚠ 1-590-836-31	CORD, POWER	(WR99ES US, Canadian)
58	* 3-703-244-00	BUSHING (2104), CORD	(WR99ES US, Canadian, WR990)
58	* 3-703-571-11	BUSHING (S) (4516), CORD	(WR99ES:E)
59	* 3-375-668-11	PANEL, BACK	(WR99ES:US, Canadian)
59	* 3-375-668-41	PANEL, BACK	(WR99ES:E)
59	* 3-375-668-21	PANEL, BACK	(WR990)
60	⚠ 1-569-007-11	ADAPTER, CONVERSION 2P	(WR99ES:E)
61	4-943-148-42	FOOT	
T1	⚠ 1-450-446-11	TRANSFORMER, POWER	(WR990)
T1	⚠ 1-450-444-11	TRANSFORMER, POWER	(WR99ES:US, Canadian)
T1	⚠ 1-450-445-11	TRANSFORMER, POWER	(WR99ES:E)
VS1	⚠ 1-692-155-11	SELECTOR, POWER VOLTAGE	(WR99ES:E)
CNJ1	1-558-350-21	CORD (WITH CONNECTOR)	(WR99ES:US, Canadian)

Note:
The components identified by mark ⚠ or dotted line with mark ⚠ are critical for safety. Replace only with part number specified.

Note:
Les composants identifiés par une marque ⚠ sont critiques pour la sécurité. Ne les remplacer que par une pièce portant le numéro spécifié.

(3) MECHANISM DECK SECTION 1 (TCM-200R4)

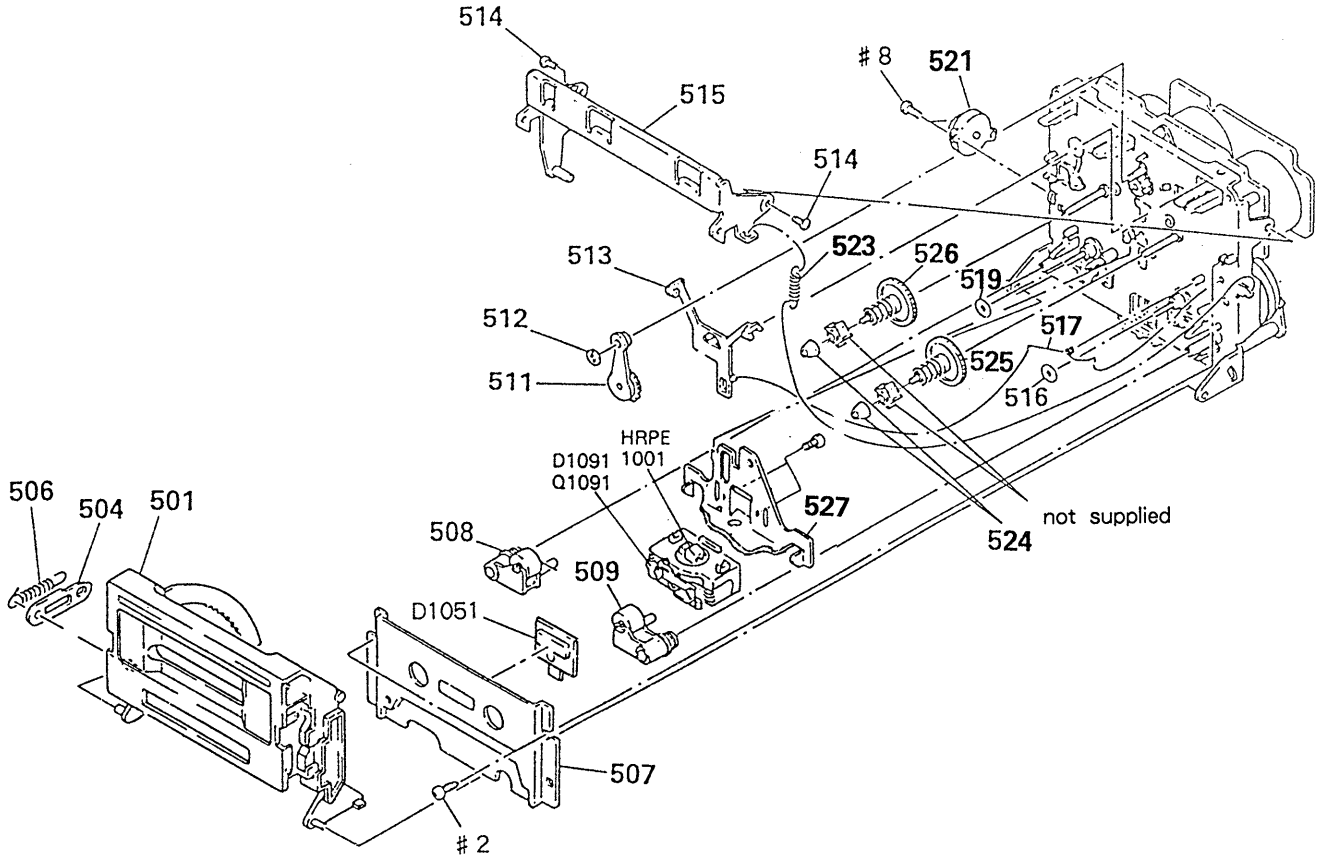

Ref. No.	Part No.	Description	Remarks
501	X-3364-566-1	HOLDER (CD-W) ASSY, CASSETTE	
504	* 3-356-717-01	LEVER (JOINT)	
506	3-356-626-01	SPRING, TENSION	
507	X-3356-613-1	PLATE ASSY, ORNAMENTAL	
508	X-3343-456-1	LEVER (PINCH R) ASSY	
509	X-3343-455-1	LEVER (PINCH F) ASSY	
511	X-3356-641-1	LEVER (FR2) ASSY	
512	3-669-465-11	WASHER (1.5), STOPPER	
513	3-356-614-01	SLIDER (BRAKE)	
514	3-356-601-11	SCREW, STEP	
515	* X-3356-608-1	LEVER (LIFTER) ASSY	
516	3-356-713-01	WASHER	
517	3-356-619-01	SPRING (B), TORSION	

Ref. No.	Part No.	Description	Remarks
519	3-356-714-01	WASHER	
521	3-712-786-01	DAMPER, OIL	
523	3-356-625-01	SPRING, TENSION	
524	3-362-308-01	CAP (REEL)	
525	X-3356-627-1	GEAR (T) ASSY	
526	X-3356-628-1	GEAR (S) ASSY	
527	X-3362-819-2	SLIDER (HEAD CHASSIS R) ASSY	
D1051	8-719-980-85	DIODE SLF325C	
D1091	8-719-950-74	LED SLR314D	
HRPE1001	A-2003-722-A	DECK ASSY, HEAD	
Q1091	8-729-809-43	TRANSISTOR SPS-314B	

(4) MECHANISM DECK SECTION 2 (TCM-200R4)

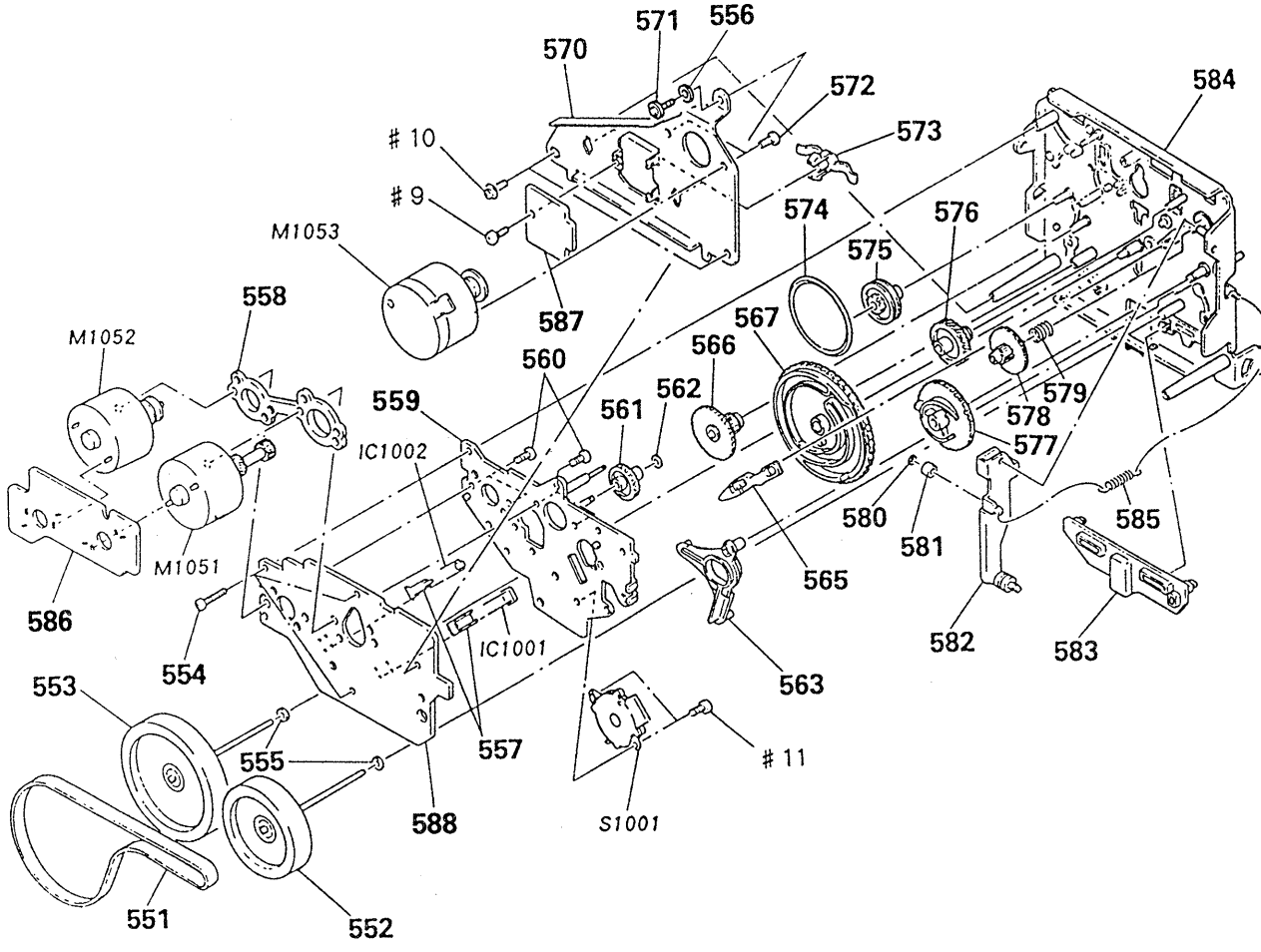

Ref. No.	Part No.	Description	Remarks
551	3-356-604-01	BELT (CAPSTAN)	
552	X-3356-642-1	FLYWHEEL (R FWD) ASSY	
553	X-3356-643-1	FLYWHEEL (R REV) ASSY	
554	3-355-801-01	SCREW (BTP 2X18)	
555	3-356-705-01	WASHER (CAPSTAN)	
556	* 3-356-718-01	SPACER (THRUST RETAINER R)	
557	3-356-631-01	HOLDER (SENSOR)	
558	* 3-356-628-01	SPACER (MOTOR)	
559	* X-3356-602-1	BRACKET (MOTOR R) ASSY	
560	3-363-804-01	SCREW (+P 2.6X6.5)	
561	3-356-702-01	GEAR (COMMUNICATION B)	
562	3-669-465-00	WASHER (1.5), STOPPER	
563	3-356-613-01	LEVER (MODE)	
565	3-356-617-01	LEVER (SELECTION)	
566	3-356-606-01	GEAR (MODE)	
567	3-356-615-01	GEAR (MODE CAM RR)	
570	* 3-356-629-01	BRACKET (THRUST RETAINER R)	
571	3-356-707-01	SCREW (+PTPWH 2X25)	
572	4-885-599-00	SCREW, FITTING, REINFORCEMENT	
573	3-575-321-00	RETAINER, THRUST, CAPSTAN	

Ref. No.	Part No.	Description	Remarks
574	3-356-603-01	BELT (MODE)	
575	3-356-607-01	PULLEY (MODE)	
576	3-356-703-01	GEAR (COMMUNICATION C)	
577	3-356-616-01	GEAR (LOADING CAM)	
578	3-356-609-01	GEAR (LOADING)	
579	3-356-605-01	SPRING, COMPRESSION	
580	3-558-708-11	WASHER, STOPPER	
581	3-356-630-01	ROLLER (LOADING)	
582	* X-3356-606-1	LEVER (LOADING) ASSY	
583	3-356-612-01	SLIDER (REVERSE)	
584	X-3356-634-1	CHASSIS (R2)COMPLETE ASSY, MECH	
585	3-356-624-01	SPRING, TENSION	
586	* 1-632-741-11	REAL MOTOR BOARD	
587	* 1-634-323-11	TRANSLATION BOARD	
588	* 1-632-740-11	MD BOARD	
M1051	X-3356-638-1	MOTOR (REEL R) ASSY	
M1052	X-3356-604-1	MOTOR (ASSIST) ASSY	
M1053	X-3356-605-1	MOTOR (CAPSTAN R) ASSY	
S1001	1-466-525-11	ENCORDER, ROTARY	
IC1001	8-749-920-97	DIODE GP2S22B	
IC1002	8-749-920-97	DIODE GP2S22B	

SECTION 6
ELECTRICAL PARTS LIST

TRANSLATION **MAIN**

NOTE:

The components identified by mark ⚠ or dotted line with mark ⚠ are critical for safety.
Replace only with part number specified.

Les composants identifiés par une marque ⚠ sont critiques pour la sécurité.
Ne les remplacer que par une pièce portant le numéro spéci-fie.

When indicating parts by reference number, please include the board name.

- Due to standardization, replacements in the parts list may be different from the parts specified in the diagrams or the components used on the set.
- −XX, −X mean standardized parts, so they may have some difference from the original one.
- RESISTORS
  All resistors are in ohms.
  METAL : metal-film resistor
  METAL OXIDE : Metal Oxide-film resistor
  F : nonflammable
- Items marked "*" are not stocked since they are seldom required for routine service. Some delay should be anticipated when ordering these items.
- SEMICONDUCTORS
  In each case, u : μ, for example :
  uA... : μA... , uPA... , μPA... , uPB... , μPB... , uPC... , μPC... , uPD..., μPD...
- CAPACITORS :
  uF : μF
- COILS
  uH : μH

Ref. No.	Part No.	Description				Remarks
	* 1-634-323-11	TRANSLATION BOARD				
		**********				
		< CONNECTOR >				
CN1091	* 1-564-709-11	PIN, CONNECTOR (SMALL TYPE) 7P				
CN1092	* 1-564-509-11	PLUG, CONNECTOR 6P				
CN1093	* 1-564-705-11	PIN, CONNECTOR (SMALL TYPE) 3P				
CN1094	* 1-564-506-11	PLUG, CONNECTOR 3P				
**********						
	* A-2006-727-A	MAIN BOARD, COMPLETE (WR99ES:US, Canadian)				
		**********				
	* A-2006-725-A	MAIN BOARD, COMPLETE (WR99ES:E, WR990)				
		**********				
	7-685-646-79	SCREW +BVTP 3X8 TYPE2 IT-3				
	7-682-548-04	SCREW +BVTT 3X8 (S)				
		< CAPACITOR >				
C121	1-136-153-00	FILM	0.01uF	5%	50V	
C122	1-136-157-00	FILM	0.022uF	5%	50V	
C123	1-136-161-00	FILM	0.047uF	5%	50V	
C124	1-136-272-00	FILM	68PF	5%	630V	
C125	1-136-433-11	FILM	100PF	5%	630V	
C126	1-130-468-00	MYLAR	560PF	5%	50V	
C131	1-136-935-11	FILM	22PF	5%	630V	
C132	1-162-285-31	CERAMIC	180PF	10%	50V	
C133	1-130-469-00	MYLAR	680PF	5%	50V	
C134	1-136-157-00	FILM	0.022uF	5%	50V	
C135	1-124-657-00	ELECT	10uF	20%	50V	
C136	1-136-158-00	FILM	0.027uF	5%	50V	
C141	1-136-153-00	FILM	0.01uF	5%	50V	
C142	1-136-157-00	FILM	0.022uF	5%	50V	
C143	1-136-161-00	FILM	0.047uF	5%	50V	
C144	1-136-272-00	FILM	68PF	5%	630V	
C145	1-136-433-11	FILM	100PF	5%	630V	
C146	1-130-468-00	MYLAR	560PF	5%	50V	
C151	1-136-935-11	FILM	22PF	5%	630V	
C152	1-162-285-31	CERAMIC	180PF	10%	50V	
C153	1-130-469-00	MYLAR	680PF	5%	50V	
C154	1-136-157-00	FILM	0.022uF	5%	50V	
C155	1-124-657-00	ELECT	10uF	20%	50V	
C156	1-136-158-00	FILM	0.027uF	5%	50V	
C191	1-123-382-00	ELECT	3.3uF	20%	100V	
C192	1-164-159-11	CERAMIC	0.1uF		50V	
C221	1-136-153-00	FILM	0.01uF	5%	50V	
C222	1-136-157-00	FILM	0.022uF	5%	50V	
C223	1-136-161-00	FILM	0.047uF	5%	50V	
C224	1-136-272-00	FILM	68PF	5%	630V	
C225	1-136-433-11	FILM	100PF	5%	630V	
C226	1-130-468-00	MYLAR	560PF	5%	50V	
C231	1-136-935-11	FILM	22PF	5%	630V	
C232	1-162-285-31	CERAMIC	180PF	10%	50V	
C233	1-130-469-00	MYLAR	680PF	5%	50V	
C234	1-136-157-00	FILM	0.022uF	5%	50V	
C235	1-124-657-00	ELECT	10uF	20%	50V	
C236	1-136-158-00	FILM	0.027uF	5%	50V	
C241	1-136-153-00	FILM	0.01uF	5%	50V	
C242	1-136-157-00	FILM	0.022uF	5%	50V	
C243	1-136-161-00	FILM	0.047uF	5%	50V	
C244	1-136-272-00	FILM	68PF	5%	630V	
C245	1-136-433-11	FILM	100PF	5%	630V	
C246	1-130-468-00	MYLAR	560PF	5%	50V	
C251	1-136-935-11	FILM	22PF	5%	630V	
C252	1-162-285-31	CERAMIC	180PF	10%	50V	
C253	1-130-469-00	MYLAR	680PF	5%	50V	
C254	1-136-157-00	FILM	0.022uF	5%	50V	
C255	1-124-657-00	ELECT	10uF	20%	50V	
C256	1-136-158-00	FILM	0.027uF	5%	50V	
C291	1-123-382-00	ELECT	3.3uF	20%	100V	
C292	1-164-159-11	CERAMIC	0.1uF		50V	
C301	1-124-902-00	ELECT	0.47uF	20%	50V	
C303	1-124-927-11	ELECT	4.7uF	20%	100V	
C304	1-124-927-11	ELECT	4.7uF	20%	100V	
C351	1-124-902-00	ELECT	0.47uF	20%	50V	
C353	1-124-927-11	ELECT	4.7uF	20%	100V	
C354	1-124-927-11	ELECT	4.7uF	20%	100V	
C401	1-124-902-00	ELECT	0.47uF	20%	50V	
C403	1-124-927-11	ELECT	4.7uF	20%	100V	

MAIN

Ref. No.	Part No.	Description				Remarks
C404	1-124-927-11	ELECT	4.7uF	20%	100V	
C451	1-124-902-00	ELECT	0.47uF	20%	50V	
C453	1-124-927-11	ELECT	4.7uF	20%	100V	
C454	1-124-927-11	ELECT	4.7uF	20%	100V	
C521	1-124-925-11	ELECT	2.2uF	20%	100V	
C522	1-124-902-00	ELECT	0.47uF	20%	50V	
C523	1-136-230-00	FILM	0.0022uF	5%	100V	
C524	1-136-230-00	FILM	0.0022uF	5%	100V	
C525	1-130-856-00	FILM	0.0068uF	5%	100V	
C526	1-124-907-11	ELECT	10uF	20%	50V	
C527	1-136-558-11	FILM	0.0039uF	5%	630V	
C528	1-124-477-11	ELECT	47uF	20%	25V	
C529	1-124-477-11	ELECT	47uF	20%	25V	
C530	1-107-046-00	MICA	4.7PF		500V	
C535	1-126-176-11	ELECT	220uF	20%	10V	
C536	1-126-176-11	ELECT	220uF	20%	10V	
C541	1-124-925-11	ELECT	2.2uF	20%	100V	
C542	1-124-902-00	ELECT	0.47uF	20%	50V	
C543	1-136-230-00	FILM	0.0022uF	5%	100V	
C544	1-136-230-00	FILM	0.0022uF	5%	100V	
C545	1-130-856-00	FILM	0.0068uF	5%	100V	
C546	1-124-907-11	ELECT	10uF	20%	50V	
C547	1-136-558-11	FILM	0.0039uF	5%	630V	
C548	1-124-477-11	ELECT	47uF	20%	25V	
C549	1-124-477-11	ELECT	47uF	20%	25V	
C550	1-107-046-00	MICA	4.7PF		500V	
C555	1-126-176-11	ELECT	220uF	20%	10V	
C556	1-126-176-11	ELECT	220uF	20%	10V	
C561	1-124-120-11	ELECT	220uF	20%	25V	
C562	1-161-494-00	CERAMIC	0.022uF		25V	
C581	1-124-925-11	ELECT	2.2uF	20%	100V	
C582	1-162-217-31	CERAMIC	56PF	5%	50V	
C583	1-136-157-00	FILM	0.022uF	5%	50V	
C585	1-162-286-31	CERAMIC	220PF	10%	50V	
C586	1-124-925-11	ELECT	2.2uF	20%	100V	
C587	1-124-925-11	ELECT	2.2uF	20%	100V	
C601	1-124-903-11	ELECT	1uF	20%	50V	
C651	1-124-903-11	ELECT	1uF	20%	50V	
C701	1-124-927-11	ELECT	4.7uF	20%	100V	
C702	1-124-772-11	ELECT	10000uF	20%	25V	
C703	1-124-126-00	ELECT	47uF	20%	10V	
C704	1-124-898-11	ELECT	4700uF	20%	16V	
C705	1-124-556-11	ELECT	2200uF	20%	16V	
C706	1-124-443-00	ELECT	100uF	20%	10V	
C707	1-124-471-00	ELECT	1000uF	20%	6.3V	
C708	1-124-919-11	ELECT	220uF	20%	63V	
C709	1-124-927-11	ELECT	4.7uF	20%	100V	
C710	1-124-927-11	ELECT	4.7uF	20%	100V	
C751	1-124-556-11	ELECT	2200uF	20%	16V	
C752	1-124-556-11	ELECT	2200uF	20%	16V	
C753	1-124-120-11	ELECT	220uF	20%	25V	
C754	1-124-120-11	ELECT	220uF	20%	25V	
C755	1-124-925-11	ELECT	2.2uF	20%	100V	
C756	1-162-286-31	CERAMIC	220PF	10%	50V	
C757	1-162-286-31	CERAMIC	220PF	10%	50V	
C758	1-126-176-11	ELECT	220uF	20%	10V	
C759	1-126-176-11	ELECT	220uF	20%	10V	
C802	1-164-159-11	CERAMIC	0.1uF		50V	
C803	1-161-494-00	CERAMIC	0.022uF		25V	
C804	1-162-306-11	CERAMIC	0.01uF	20%	16V	
C805	1-124-925-11	ELECT	2.2uF	20%	100V	
C806	1-164-159-11	CERAMIC	0.1uF		50V	
C807	1-164-159-11	CERAMIC	0.1uF		50V	
C811	1-126-233-11	ELECT	22uF	20%	50V	
C831	1-124-927-11	ELECT	4.7uF	20%	100V	
C832	1-124-477-11	ELECT	47uF	20%	25V	
C833	1-130-479-00	MYLAR	0.0047uF	5%	50V	
C834	1-124-443-00	ELECT	100uF	20%	10V	
C841	1-124-927-11	ELECT	4.7uF	20%	100V	
C842	1-124-477-11	ELECT	47uF	20%	25V	
C843	1-130-479-00	MYLAR	0.0047uF	5%	50V	
C851	1-124-443-00	ELECT	100uF	20%	10V	
C871	1-164-159-11	CERAMIC	0.1uF		50V	
C872	1-164-159-11	CERAMIC	0.1uF		50V	
C873	1-162-306-11	CERAMIC	0.01uF	20%	16V	
C881	1-164-159-11	CERAMIC	0.1uF		50V	
C882	1-164-159-11	CERAMIC	0.1uF		50V	
C898	1-164-159-11	CERAMIC	0.1uF		50V	
			(WR99ES:US, Canadian)			
C899	1-161-375-00	CERAMIC	0.0022uF	20%	50V	

< CONNECTOR >

CN541	1-506-469-11	CONNECTOR 4P, MALE
CN561	* 1-564-705-11	PIN, CONNECTOR (SMALL TYPE) 3P
CN562	* 1-564-337-00	PIN, CONNECTOR 3P
CN571	* 1-564-707-11	PIN, CONNECTOR (SMALL TYPE) 5P
CN701	* 1-564-513-11	PLUG, CONNECTOR 10P
CN801	* 1-564-340-61	PIN, CONNECTOR 6P
CN802	* 1-568-935-11	PIN, CONNECTOR 8P
CN804	* 1-691-908-11	SOCKET, CONNECTOR
CN805	* 1-564-338-71	PIN, CONNECTOR 4P
CN806	* 1-564-340-00	PIN, CONNECTOR 6P
CN807	1-565-951-11	SOCKET, CONNECTOR (PC BOARD) 4P (WR99ES:US, Canadian)
CN810	1-506-469-11	CONNECTOR 4P, MALE
CNP601	* 1-691-915-11	CONNECTOR, BOARD TO BOARD 15P
CNP602	* 1-691-915-11	CONNECTOR, BOARD TO BOARD 15P

< CONPOSITION CIRCUIT BLOCK >

CP851	1-233-199-11	COMPOSITION CIRCUIT BLOCK
CP852	1-233-199-11	COMPOSITION CIRCUIT BLOCK

< DIODE >

D191	8-719-987-63	DIODE 1N4148M
D291	8-719-987-63	DIODE 1N4148M
D521	8-719-987-63	DIODE 1N4148M
D522	8-719-987-63	DIODE 1N4148M
D541	8-719-987-63	DIODE 1N4148M

MAIN

Ref. No.	Part No.	Description	Remarks
D542	8-719-987-63	DIODE 1N4148M	
D561	8-719-987-63	DIODE 1N4148M	
D601	8-719-987-63	DIODE 1N4148M	
D602	8-719-987-63	DIODE 1N4148M	
D701	8-719-200-77	DIODE 10E2N	
D702	8-719-500-36	DIODE D2SB20	
D703	8-719-987-63	DIODE 1N4148M	
D704	8-719-001-54	DIODE UZL-11H2	
D705	8-719-200-77	DIODE 10E2N	
D706	8-719-933-41	DIODE HZS6C3L	
D707	8-719-987-63	DIODE 1N4148M	
D708	8-719-933-38	DIODE HZS6B3L	
D751	8-719-200-77	DIODE 10E2N	
D752	8-719-200-77	DIODE 10E2N	
D753	8-719-200-77	DIODE 10E2N	
D754	8-719-200-77	DIODE 10E2N	
D755	8-719-987-63	DIODE 1N4148M	
D756	8-719-987-63	DIODE 1N4148M	
D757	8-719-933-33	DIODE HZS6A1L	
D758	8-719-987-63	DIODE 1N4148M	
D801	8-719-987-63	DIODE 1N4148M	
D802	8-719-987-63	DIODE 1N4148M	
D804	8-719-987-63	DIODE 1N4148M	
D805	8-719-987-63	DIODE 1N4148M	
D831	8-719-987-63	DIODE 1N4148M	
D841	8-719-987-63	DIODE 1N4148M	
D890	8-719-987-63	DIODE 1N4148M	(WR99ES:US, Canadian)
D891	8-719-987-63	DIODE 1N4148M	(WR99ES:US, Canadian)
D892	8-719-987-63	DIODE 1N4148M	
D893	8-719-987-63	DIODE 1N4148M	
D894	8-719-987-63	DIODE 1N4148M	
D895	8-719-987-63	DIODE 1N4148M	
		< IC >	
IC501	8-759-106-56	IC uPC1297CA	
IC502	8-759-106-56	IC uPC1297CA	
IC503	8-759-111-44	IC uPC4570C-1	
IC504	8-759-111-44	IC uPC4570C-1	
IC506	8-759-140-53	IC MC14053BCP	
IC508	8-759-945-58	IC RC4558P	
IC509	8-759-945-58	IC RC4558P	
IC601	8-752-060-64	IC CXA1198AP	
IC602	8-752-060-64	IC CXA1198AP	
IC603	8-759-000-47	IC MC14051BCP	
IC801	8-759-059-44	IC M50944-178SP	
IC802	8-759-633-86	IC M50747-B83SP	
IC803	8-759-822-09	IC LB1641	
IC804	8-759-240-71	IC TC4071BP	
IC805	8-759-973-95	IC BA6219B	
IC806	8-759-822-09	IC LB1641	
IC807	8-759-973-95	IC BA6219B	
IC808	8-759-822-09	IC LB1641	
IC809	8-759-140-11	IC uPD4011BC	(WR99ES:US, Canadian)

Ref. No.	Part No.	Description	Remarks
		< COIL >	
L131	1-410-780-11	INDUCTOR 27mH	
L151	1-410-780-11	INDUCTOR 27mH	
L231	1-410-780-11	INDUCTOR 27mH	
L251	1-410-780-11	INDUCTOR 27mH	
		< JACK >	
PJ561	1-573-070-11	JACK, PIN 4P (LINE IN/OUT)	
		< TRANSISTOR >	
Q131	8-729-900-74	TRANSISTOR DTC143TS	
Q151	8-729-900-74	TRANSISTOR DTC143TS	
Q161	8-729-922-37	TRANSISTOR 2SD2144S	
Q231	8-729-900-74	TRANSISTOR DTC143TS	
Q251	8-729-900-74	TRANSISTOR DTC143TS	
Q261	8-729-922-37	TRANSISTOR 2SD2144S	
Q301	8-729-620-05	TRANSISTOR 2SC2603-EF	
Q351	8-729-620-05	TRANSISTOR 2SC2603-EF	
Q401	8-729-620-05	TRANSISTOR 2SC2603-EF	
Q451	8-729-620-05	TRANSISTOR 2SC2603-EF	
Q521	8-729-900-65	TRANSISTOR DTA144ES	
Q522	8-729-900-65	TRANSISTOR DTA144ES	
Q523	8-729-900-61	TRANSISTOR DTA114ES	
Q524	8-729-900-89	TRANSISTOR DTC144ES	
Q525	8-729-900-89	TRANSISTOR DTC144ES	
Q526	8-729-900-80	TRANSISTOR DTC114ES	
Q527	8-729-821-04	TRANSISTOR 2SA1317-STU	
Q528	8-729-142-46	TRANSISTOR 2SC2001-M	
Q529	8-729-142-46	TRANSISTOR 2SC2001-M	
Q531	8-729-900-89	TRANSISTOR DTC144ES	
Q532	8-729-900-89	TRANSISTOR DTC144ES	
Q533	8-729-900-65	TRANSISTOR DTA144ES	
Q541	8-729-900-65	TRANSISTOR DTA144ES	
Q542	8-729-900-65	TRANSISTOR DTA144ES	
Q543	8-729-900-61	TRANSISTOR DTA114ES	
Q544	8-729-900-89	TRANSISTOR DTC144ES	
Q545	8-729-900-89	TRANSISTOR DTC144ES	
Q546	8-729-900-80	TRANSISTOR DTC114ES	
Q547	8-729-821-04	TRANSISTOR 2SA1317-STU	
Q548	8-729-142-46	TRANSISTOR 2SC2001-M	
Q549	8-729-142-46	TRANSISTOR 2SC2001-M	
Q551	8-729-900-89	TRANSISTOR DTC144ES	
Q552	8-729-900-89	TRANSISTOR DTC144ES	
Q553	8-729-900-65	TRANSISTOR DTA144ES	
Q561	8-729-900-65	TRANSISTOR DTA144ES	
Q562	8-729-821-04	TRANSISTOR 2SA1317-STU	
Q581	8-729-900-65	TRANSISTOR DTA144ES	
Q582	8-729-900-89	TRANSISTOR DTC144ES	
Q601	8-729-900-65	TRANSISTOR DTA144ES	
Q602	8-729-900-89	TRANSISTOR DTC144ES	

MAIN

Ref. No.	Part No.	Description		Remarks
Q603	8-729-900-89	TRANSISTOR	DTC144ES	
Q604	8-729-620-05	TRANSISTOR	2SC2603-EF	
Q605	8-729-900-89	TRANSISTOR	DTC144ES	
Q651	8-729-900-65	TRANSISTOR	DTA144ES	
Q652	8-729-900-80	TRANSISTOR	DTC114ES	
Q653	8-729-900-89	TRANSISTOR	DTC144ES	
Q654	8-729-900-65	TRANSISTOR	DTA144ES	
Q701	8-729-620-05	TRANSISTOR	2SC2603-EF	
Q702	8-729-141-83	TRANSISTOR	2SB1094-LK	
Q703	8-729-620-05	TRANSISTOR	2SC2603-EF	
Q704	8-729-620-05	TRANSISTOR	2SC2603-EF	
Q705	8-729-209-15	TRANSISTOR	2SD2012	
Q706	8-729-821-04	TRANSISTOR	2SA1317-STU	
Q707	8-729-140-04	TRANSISTOR	2SB1116A-L	
Q751	8-729-620-05	TRANSISTOR	2SC2603-EF	
Q752	8-729-209-15	TRANSISTOR	2SD2012	
Q753	8-729-620-05	TRANSISTOR	2SC2603-EF	
Q754	8-729-821-04	TRANSISTOR	2SA1317-STU	
Q755	8-729-141-83	TRANSISTOR	2SB1094-LK	
Q756	8-729-821-04	TRANSISTOR	2SA1317-STU	
Q757	8-729-821-04	TRANSISTOR	2SA1317-STU	
Q801	8-729-620-05	TRANSISTOR	2SC2603-EF	
Q802	8-729-620-05	TRANSISTOR	2SC2603-EF	
Q803	8-729-821-04	TRANSISTOR	2SA1317-STU	
Q831	8-729-620-05	TRANSISTOR	2SC2603-EF	
Q832	8-729-620-05	TRANSISTOR	2SC2603-EF	
Q841	8-729-620-05	TRANSISTOR	2SC2603-EF	
Q842	8-729-620-05	TRANSISTOR	2SC2603-EF	
Q871	8-729-900-65	TRANSISTOR	DTA144ES	
Q872	8-729-900-80	TRANSISTOR	DTC114ES	
Q873	8-729-900-80	TRANSISTOR	DTC114ES	
Q874	8-729-900-80	TRANSISTOR	DTC114ES	
Q875	8-729-900-65	TRANSISTOR	DTA144ES	
Q876	8-729-900-89	TRANSISTOR	DTC144ES	
Q877	8-729-900-89	TRANSISTOR	DTC144ES	
Q878	8-729-900-89	TRANSISTOR	DTC144ES	
Q879	8-729-900-65	TRANSISTOR	DTA144ES	
Q881	8-729-900-65	TRANSISTOR	DTA144ES	
Q882	8-729-900-89	TRANSISTOR	DTC144ES	
Q883	8-729-900-80	TRANSISTOR	DTC114ES	
Q884	8-729-900-80	TRANSISTOR	DTC114ES	
Q885	8-729-900-80	TRANSISTOR	DTC114ES	

< RESISTOR >

Ref. No.	Part No.	Description				Remarks
R121	1-249-427-11	CARBON	6.8K	5%	1/4W	
R122	1-249-435-11	CARBON	33K	5%	1/4W	
R123	⚠1-219-153-11	FUSIBLE	10	5%	1/4W	F
R124	1-247-883-00	CARBON	150K	5%	1/4W	
R131	1-249-428-11	CARBON	8.2K	5%	1/4W	
R132	1-249-433-11	CARBON	22K	5%	1/4W	
R133	1-249-403-11	CARBON	68	5%	1/4W	
R134	1-247-882-11	CARBON	130K	5%	1/4W	
R135	1-249-426-11	CARBON	5.6K	5%	1/4W	
R136	1-249-420-11	CARBON	1.8K	5%	1/4W	
R137	1-247-840-00	CARBON	2.4K	5%	1/4W	
R138	1-247-887-00	CARBON	220K	5%	1/4W	
R139	1-249-425-11	CARBON	4.7K	5%	1/4W	
R141	1-249-427-11	CARBON	6.8K	5%	1/4W	
R142	1-249-435-11	CARBON	33K	5%	1/4W	
R143	⚠1-219-153-11	FUSIBLE	10	5%	1/4W	F
R144	1-247-883-00	CARBON	150K	5%	1/4W	
R151	1-249-428-11	CARBON	8.2K	5%	1/4W	
R152	1-249-433-11	CARBON	22K	5%	1/4W	
R153	1-249-403-11	CARBON	68	5%	1/4W	
R154	1-247-882-11	CARBON	130K	5%	1/4W	
R155	1-249-426-11	CARBON	5.6K	5%	1/4W	
R156	1-249-420-11	CARBON	1.8K	5%	1/4W	
R157	1-247-840-00	CARBON	2.4K	5%	1/4W	
R158	1-247-887-00	CARBON	220K	5%	1/4W	
R159	1-249-425-11	CARBON	4.7K	5%	1/4W	
R161	1-249-433-11	CARBON	22K	5%	1/4W	
R162	1-249-417-11	CARBON	1K	5%	1/4W	
R163	1-249-421-11	CARBON	2.2K	5%	1/4W	
R164	1-249-432-11	CARBON	18K	5%	1/4W	
R165	1-249-421-11	CARBON	2.2K	5%	1/4W	
R191	1-249-429-11	CARBON	10K	5%	1/4W	
R192	1-247-864-11	CARBON	24K	5%	1/4W	
R193	1-249-434-11	CARBON	27K	5%	1/4W	
R194	1-249-408-11	CARBON	180	5%	1/4W	
R221	1-249-427-11	CARBON	6.8K	5%	1/4W	
R222	1-249-435-11	CARBON	33K	5%	1/4W	
R223	⚠1-219-153-11	FUSIBLE	10	5%	1/4W	F
R224	1-247-883-00	CARBON	150K	5%	1/4W	
R231	1-249-428-11	CARBON	8.2K	5%	1/4W	
R232	1-249-433-11	CARBON	22K	5%	1/4W	
R233	1-249-403-11	CARBON	68	5%	1/4W	
R234	1-247-882-11	CARBON	130K	5%	1/4W	
R235	1-249-426-11	CARBON	5.6K	5%	1/4W	
R236	1-249-420-11	CARBON	1.8K	5%	1/4W	
R237	1-247-840-00	CARBON	2.4K	5%	1/4W	
R238	1-247-887-00	CARBON	220K	5%	1/4W	
R239	1-249-425-11	CARBON	4.7K	5%	1/4W	
R241	1-249-427-11	CARBON	6.8K	5%	1/4W	
R242	1-249-435-11	CARBON	33K	5%	1/4W	
R243	⚠1-219-153-11	FUSIBLE	10	5%	1/4W	F
R244	1-247-883-00	CARBON	150K	5%	1/4W	
R251	1-249-428-11	CARBON	8.2K	5%	1/4W	
R252	1-249-433-11	CARBON	22K	5%	1/4W	
R253	1-249-403-11	CARBON	68	5%	1/4W	
R254	1-247-882-11	CARBON	130K	5%	1/4W	
R255	1-249-426-11	CARBON	5.6K	5%	1/4W	
R256	1-249-420-11	CARBON	1.8K	5%	1/4W	
R257	1-247-840-00	CARBON	2.4K	5%	1/4W	
R258	1-247-887-00	CARBON	220K	5%	1/4W	
R259	1-249-425-11	CARBON	4.7K	5%	1/4W	
R261	1-249-433-11	CARBON	22K	5%	1/4W	
R262	1-249-417-11	CARBON	1K	5%	1/4W	
R263	1-249-421-11	CARBON	2.2K	5%	1/4W	
R264	1-249-432-11	CARBON	18K	5%	1/4W	

Note:
The components identified by mark ⚠ or dotted line with mark ⚠ are critical for safety.
Replace only with part number specified.

Note:
Les composants identifiés par une marque ⚠ sont critiques pour la sécurité.
Ne les remplacer que par une pièce portant le numéro spécifié.

MAIN

Ref. No.	Part No.	Description				Remarks
R265	1-249-421-11	CARBON	2.2K	5%	1/4W	
R291	1-249-429-11	CARBON	10K	5%	1/4W	
R292	1-247-864-11	CARBON	24K	5%	1/4W	
R293	1-249-434-11	CARBON	27K	5%	1/4W	
R294	1-249-408-11	CARBON	180	5%	1/4W	
R301	1-249-429-11	CARBON	10K	5%	1/4W	
R302	1-249-425-11	CARBON	4.7K	5%	1/4W	
R304	1-249-425-11	CARBON	4.7K	5%	1/4W	
R305	1-249-425-11	CARBON	4.7K	5%	1/4W	
R306	1-249-425-11	CARBON	4.7K	5%	1/4W	
R351	1-249-429-11	CARBON	10K	5%	1/4W	
R352	1-249-425-11	CARBON	4.7K	5%	1/4W	
R354	1-249-425-11	CARBON	4.7K	5%	1/4W	
R355	1-249-425-11	CARBON	4.7K	5%	1/4W	
R356	1-249-425-11	CARBON	4.7K	5%	1/4W	
R401	1-249-429-11	CARBON	10K	5%	1/4W	
R402	1-249-425-11	CARBON	4.7K	5%	1/4W	
R404	1-249-425-11	CARBON	4.7K	5%	1/4W	
R405	1-249-425-11	CARBON	4.7K	5%	1/4W	
R406	1-249-425-11	CARBON	4.7K	5%	1/4W	
R451	1-249-429-11	CARBON	10K	5%	1/4W	
R452	1-249-425-11	CARBON	4.7K	5%	1/4W	
R454	1-249-425-11	CARBON	4.7K	5%	1/4W	
R455	1-249-425-11	CARBON	4.7K	5%	1/4W	
R456	1-249-425-11	CARBON	4.7K	5%	1/4W	
R521	1-249-425-11	CARBON	4.7K	5%	1/4W	
R522	1-249-422-11	CARBON	2.7K	5%	1/4W	
R523	1-249-430-11	CARBON	12K	5%	1/4W	
R524	1-249-441-11	CARBON	100K	5%	1/4W	
R526	1-249-421-11	CARBON	2.2K	5%	1/4W	
R527	1-249-421-11	CARBON	2.2K	5%	1/4W	
R528	1-249-429-11	CARBON	10K	5%	1/4W	
R529	1-249-437-11	CARBON	47K	5%	1/4W	
R530	1-249-437-11	CARBON	47K	5%	1/4W	
R531	1-249-389-11	CARBON	4.7	5%	1/4W	
R532	1-249-389-11	CARBON	4.7	5%	1/4W	
R541	1-249-425-11	CARBON	4.7K	5%	1/4W	
R542	1-249-422-11	CARBON	2.7K	5%	1/4W	
R543	1-249-430-11	CARBON	12K	5%	1/4W	
R544	1-249-441-11	CARBON	100K	5%	1/4W	
R546	1-249-421-11	CARBON	2.2K	5%	1/4W	
R547	1-249-421-11	CARBON	2.2K	5%	1/4W	
R548	1-249-429-11	CARBON	10K	5%	1/4W	
R549	1-249-437-11	CARBON	47K	5%	1/4W	
R550	1-249-437-11	CARBON	47K	5%	1/4W	
R551	1-249-389-11	CARBON	4.7	5%	1/4W	
R552	1-249-389-11	CARBON	4.7	5%	1/4W	
R561	1-249-409-11	CARBON	220	5%	1/4W	
R562	1-249-433-11	CARBON	22K	5%	1/4W	
R581	1-247-887-00	CARBON	220K	5%	1/4W	
R582	1-249-425-11	CARBON	4.7K	5%	1/4W	
R583	1-249-437-11	CARBON	47K	5%	1/4W	
R584	1-249-428-11	CARBON	8.2K	5%	1/4W	
R585	1-249-441-11	CARBON	100K	5%	1/4W	
R586	1-249-423-11	CARBON	3.3K	5%	1/4W	

Ref. No.	Part No.	Description				Remarks
R587	1-249-421-11	CARBON	2.2K	5%	1/4W	
R588	1-249-441-11	CARBON	100K	5%	1/4W	
R601	1-249-417-11	CARBON	1K	5%	1/4W	
R602	1-249-441-11	CARBON	100K	5%	1/4W	
R603	1-247-864-11	CARBON	24K	5%	1/4W	
R604	1-249-433-11	CARBON	22K	5%	1/4W	
R621	1-249-434-11	CARBON	27K	5%	1/4W	
R622	1-249-434-11	CARBON	27K	5%	1/4W	
R623	1-247-874-11	CARBON	62K	5%	1/4W	
R624	1-247-883-00	CARBON	150K	5%	1/4W	
R625	1-249-437-11	CARBON	47K	5%	1/4W	
R626	1-249-439-11	CARBON	68K	5%	1/4W	
R631	1-249-436-11	CARBON	39K	5%	1/4W	
R632	1-247-868-11	CARBON	36K	5%	1/4W	
R633	1-247-880-11	CARBON	110K	5%	1/4W	
R634	1-247-885-00	CARBON	180K	5%	1/4W	
R635	1-249-437-11	CARBON	47K	5%	1/4W	
R636	1-247-889-00	CARBON	270K	5%	1/4W	
R641	1-249-436-11	CARBON	39K	5%	1/4W	
R642	1-249-436-11	CARBON	39K	5%	1/4W	
R643	1-249-439-11	CARBON	68K	5%	1/4W	
R644	1-247-883-00	CARBON	150K	5%	1/4W	
R645	1-247-868-11	CARBON	36K	5%	1/4W	
R646	1-249-441-11	CARBON	100K	5%	1/4W	
R651	1-249-417-11	CARBON	1K	5%	1/4W	
R652	1-249-441-11	CARBON	100K	5%	1/4W	
R653	1-247-864-11	CARBON	24K	5%	1/4W	
R655	1-247-887-00	CARBON	220K	5%	1/4W	
R656	1-249-429-11	CARBON	10K	5%	1/4W	
R662	1-249-434-11	CARBON	27K	5%	1/4W	
R663	1-249-434-11	CARBON	27K	5%	1/4W	
R664	1-249-439-11	CARBON	68K	5%	1/4W	
R665	1-247-885-00	CARBON	180K	5%	1/4W	
R666	1-249-437-11	CARBON	47K	5%	1/4W	
R667	1-249-439-11	CARBON	68K	5%	1/4W	
R668	1-249-436-11	CARBON	39K	5%	1/4W	
R669	1-247-868-11	CARBON	36K	5%	1/4W	
R670	1-247-883-00	CARBON	150K	5%	1/4W	
R671	1-247-887-00	CARBON	220K	5%	1/4W	
R672	1-247-870-11	CARBON	43K	5%	1/4W	
R673	1-247-889-00	CARBON	270K	5%	1/4W	
R674	1-249-436-11	CARBON	39K	5%	1/4W	
R675	1-249-436-11	CARBON	39K	5%	1/4W	
R676	1-249-440-11	CARBON	82K	5%	1/4W	
R677	1-247-885-00	CARBON	180K	5%	1/4W	
R678	1-247-868-11	CARBON	36K	5%	1/4W	
R679	1-249-441-11	CARBON	100K	5%	1/4W	
R681	1-247-858-11	CARBON	13K	5%	1/4W	
R682	1-247-866-11	CARBON	30K	5%	1/4W	
R683	1-247-858-11	CARBON	13K	5%	1/4W	
R684	1-249-438-11	CARBON	56K	5%	1/4W	
R685	1-249-435-11	CARBON	33K	5%	1/4W	
R686	1-247-885-00	CARBON	180K	5%	1/4W	
R687	1-247-864-11	CARBON	24K	5%	1/4W	
R688	1-247-870-11	CARBON	43K	5%	1/4W	

MAIN

Ref. No.	Part No.	Description				Remarks
R689	1-249-435-11	CARBON	33K	5%	1/4W	
R690	1-249-438-11	CARBON	56K	5%	1/4W	
R691	1-247-866-11	CARBON	30K	5%	1/4W	
R692	1-247-887-00	CARBON	220K	5%	1/4W	
R693	1-247-862-11	CARBON	20K	5%	1/4W	
R694	1-247-870-11	CARBON	43K	5%	1/4W	
R695	1-249-429-11	CARBON	10K	5%	1/4W	
R696	1-249-437-11	CARBON	47K	5%	1/4W	
R697	1-249-435-11	CARBON	33K	5%	1/4W	
R698	1-247-885-00	CARBON	180K	5%	1/4W	
R700	⚠1-219-134-11	FUSIBLE	0.1	5%	1/4W	F
R701	1-249-433-11	CARBON	22K	5%	1/4W	
R702	1-249-421-11	CARBON	2.2K	5%	1/4W	
R703	⚠1-219-154-11	FUSIBLE	0.12	10%	1/4W	
R704	⚠1-219-136-11	FUSIBLE	0.22	10%	1/4W	
R705	1-249-422-11	CARBON	2.7K	5%	1/4W	
R706	1-249-421-11	CARBON	2.2K	5%	1/4W	
R707	1-249-421-11	CARBON	2.2K	5%	1/4W	
R708	1-249-430-11	CARBON	12K	5%	1/4W	
R709	1-249-429-11	CARBON	10K	5%	1/4W	
R710	1-249-436-11	CARBON	39K	5%	1/4W	
R751	1-249-433-11	CARBON	22K	5%	1/4W	
R752	1-249-421-11	CARBON	2.2K	5%	1/4W	
R753	1-249-421-11	CARBON	2.2K	5%	1/4W	
R754	1-249-421-11	CARBON	2.2K	5%	1/4W	
R755	1-249-421-11	CARBON	2.2K	5%	1/4W	
R756	1-249-417-11	CARBON	1K	5%	1/4W	
R757	1-249-417-11	CARBON	1K	5%	1/4W	
R758	1-249-417-11	CARBON	1K	5%	1/4W	
R759	1-249-415-11	CARBON	680	5%	1/4W	
R760	1-249-422-11	CARBON	2.7K	5%	1/4W	
R761	1-249-424-11	CARBON	3.9K	5%	1/4W	
R762	1-249-423-11	CARBON	3.3K	5%	1/4W	
R763	1-249-405-11	CARBON	100	5%	1/4W	
R801	1-249-405-11	CARBON	100	5%	1/4W	
R802	1-249-405-11	CARBON	100	5%	1/4W	
R803	1-249-433-11	CARBON	22K	5%	1/4W	
R804	1-249-433-11	CARBON	22K	5%	1/4W	
R806	1-249-421-11	CARBON	2.2K	5%	1/4W	
R807	1-249-421-11	CARBON	2.2K	5%	1/4W	
R808	1-249-421-11	CARBON	2.2K	5%	1/4W	
R809	1-249-421-11	CARBON	2.2K	5%	1/4W	
R810	1-249-421-11	CARBON	2.2K	5%	1/4W	
R811	1-249-433-11	CARBON	22K	5%	1/4W	
R812	1-249-433-11	CARBON	22K	5%	1/4W	
R813	1-247-903-00	CARBON	1M	5%	1/4W	
R814	1-249-425-11	CARBON	4.7K	5%	1/4W	
R815	1-249-433-11	CARBON	22K	5%	1/4W	
R816	1-249-433-11	CARBON	22K	5%	1/4W	
R817	1-249-424-11	CARBON	3.9K	5%	1/4W	
R819	1-249-433-11	CARBON	22K	5%	1/4W	
R820	1-249-429-11	CARBON	10K	5%	1/4W	
R821	1-249-441-11	CARBON	100K	5%	1/4W	
R822	1-249-417-11	CARBON	1K	5%	1/4W	
R823	1-249-437-11	CARBON	47K	5%	1/4W	

Ref. No.	Part No.	Description				Remarks
R824	1-249-420-11	CARBON	1.8K	5%	1/4W	
R825	1-249-417-11	CARBON	1K	5%	1/4W	
R826	1-249-429-11	CARBON	10K	5%	1/4W	
R827	1-249-429-11	CARBON	10K	5%	1/4W	
R828	1-249-415-11	CARBON	680	5%	1/4W	
R829	⚠1-212-950-00	FUSIBLE	4.7	5%	1/2W	F
R831	1-249-429-11	CARBON	10K	5%	1/4W	
R832	1-249-433-11	CARBON	22K	5%	1/4W	
R833	1-249-429-11	CARBON	10K	5%	1/4W	
R834	1-249-421-11	CARBON	2.2K	5%	1/4W	
R835	1-249-429-11	CARBON	10K	5%	1/4W	
R836	1-249-417-11	CARBON	1K	5%	1/4W	
R837	1-249-412-11	CARBON	390	5%	1/4W	
R841	1-249-429-11	CARBON	10K	5%	1/4W	
R842	1-249-433-11	CARBON	22K	5%	1/4W	
R843	1-249-429-11	CARBON	10K	5%	1/4W	
R844	1-249-421-11	CARBON	2.2K	5%	1/4W	
R845	1-249-429-11	CARBON	10K	5%	1/4W	
R846	1-249-417-11	CARBON	1K	5%	1/4W	
R847	1-249-412-11	CARBON	390	5%	1/4W	
R851	1-247-903-00	CARBON	1M	5%	1/4W	
R852	1-249-425-11	CARBON	4.7K	5%	1/4W	
R853	1-249-425-11	CARBON	4.7K	5%	1/4W	
R854	1-249-425-11	CARBON	4.7K	5%	1/4W	
R855	1-249-425-11	CARBON	4.7K	5%	1/4W	
R856	1-249-425-11	CARBON	4.7K	5%	1/4W	
R857	1-249-425-11	CARBON	4.7K	5%	1/4W	
R858	1-249-425-11	CARBON	4.7K	5%	1/4W	
R859	1-249-425-11	CARBON	4.7K	5%	1/4W	
R861	1-249-436-11	CARBON	39K	5%	1/4W	
R862	1-249-436-11	CARBON	39K	5%	1/4W	
R863	1-247-895-00	CARBON	470K	5%	1/4W	
R864	1-247-895-00	CARBON	470K	5%	1/4W	
R865	1-249-436-11	CARBON	39K	5%	1/4W	
R866	1-249-436-11	CARBON	39K	5%	1/4W	
R867	1-247-895-00	CARBON	470K	5%	1/4W	
R868	1-247-895-00	CARBON	470K	5%	1/4W	
R871	1-249-433-11	CARBON	22K	5%	1/4W	
R872	1-247-864-11	CARBON	24K	5%	1/4W	
R873	1-249-411-11	CARBON	330	5%	1/4W	
R874	1-247-830-11	CARBON	910	5%	1/4W	
R875	1-249-418-11	CARBON	1.2K	5%	1/4W	
R876	1-249-417-11	CARBON	1K	5%	1/4W	
R877	⚠1-212-950-00	FUSIBLE	4.7	5%	1/2W	F
R878	1-249-416-11	CARBON	820	5%	1/4W	
R879	1-249-419-11	CARBON	1.5K	5%	1/4W	
R880	1-249-417-11	CARBON	1K	5%	1/4W	
R881	⚠1-212-950-00	FUSIBLE	4.7	5%	1/2W	F
R882	1-249-433-11	CARBON	22K	5%	1/4W	
R883	1-247-864-11	CARBON	24K	5%	1/4W	
R884	1-249-411-11	CARBON	330	5%	1/4W	
R885	1-247-830-11	CARBON	910	5%	1/4W	
R886	1-249-418-11	CARBON	1.2K	5%	1/4W	
R887	1-249-417-11	CARBON	1K	5%	1/4W	
R888	⚠1-212-950-00	FUSIBLE	4.7	5%	1/2W	F

Note:
The components identified by mark ⚠ or dotted line with mark ⚠ are critical for safety. Replace only with part number specified.

Note:
Les composants identifiés par une marque ⚠ sont critiques pour la sécurité. Ne les remplacer que par une pièce portant le numéro spécifié.

PANEL (including SW (A) / (B) /POWER SW/FL/HP/REC VOL/COVER/POWER TRANSFORMER/DOLBY/PJ)

Ref. No.	Part No.	Description	Remarks
R889	1-249-416-11	CARBON 820 5% 1/4W	
R890	1-249-419-11	CARBON 1.5K 5% 1/4W	
R891	1-249-417-11	CARBON 1K 5% 1/4W	
R892	⚠1-212-950-00	FUSIBLE 4.7 5% 1/2W	F
R893	1-249-433-11	CARBON 22K 5% 1/4W	
R894	1-249-393-11	CARBON 10 5% 1/4W	
R895	1-249-429-11	CARBON 10K 5% 1/4W	(WR99ES:US, Canadian)
R896	1-249-429-11	CARBON 10K 5% 1/4W	(WR99ES:US, Canadian)
R897	1-249-405-11	CARBON 100 5% 1/4W	(WR99ES:US, Canadian)
R898	1-249-429-11	CARBON 10K 5% 1/4W	(WR99ES:US, Canadian)
R899	1-249-429-11	CARBON 10K 5% 1/4W	(WR99ES:US, Canadian)
R941	1-249-433-11	CARBON 22K 5% 1/4W	
R942	1-247-862-11	CARBON 20K 5% 1/4W	
R943	1-249-429-11	CARBON 10K 5% 1/4W	
R945	1-249-433-11	CARBON 22K 5% 1/4W	
		< VARIABLE RESISTOR >	
RV121	1-238-601-11	RES, ADJ, CARBON 22K	
RV131	1-238-600-11	RES, ADJ, CARBON 10K	
RV141	1-238-601-11	RES, ADJ, CARBON 22K	
RV151	1-238-600-11	RES, ADJ, CARBON 10K	
RV221	1-238-601-11	RES, ADJ, CARBON 22K	
RV231	1-238-600-11	RES, ADJ, CARBON 10K	
RV241	1-238-601-11	RES, ADJ, CARBON 22K	
RV251	1-238-600-11	RES, ADJ, CARBON 10K	
RV301	1-238-600-11	RES, ADJ, CARBON 10K	
RV351	1-238-600-11	RES, ADJ, CARBON 10K	
RV401	1-238-600-11	RES, ADJ, CARBON 10K	
RV451	1-238-600-11	RES, ADJ, CARBON 10K	
RV831	1-238-602-11	RES, ADJ, CARBON 47K	
RV841	1-238-602-11	RES, ADJ, CARBON 47K	
RV871	1-238-600-11	RES, ADJ, CARBON 10K	
RV872	1-238-600-11	RES, ADJ, CARBON 10K	
RV881	1-238-600-11	RES, ADJ, CARBON 10K	
RV882	1-238-600-11	RES, ADJ, CARBON 10K	
RV891	1-238-600-11	RES, ADJ, CARBON 10K	
		< RELAY >	
RY531	1-515-683-11	RELAY	
RY551	1-515-683-11	RELAY	
		< TRANSFORMER >	
T121	1-433-382-11	TRANSFORMER, BIAS OSCILLATION	
T141	1-433-382-11	TRANSFORMER, BIAS OSCILLATION	
T221	1-433-382-11	TRANSFORMER, BIAS OSCILLATION	
T241	1-433-382-11	TRANSFORMER, BIAS OSCILLATION	
T521	1-433-336-11	TRANSFORMER, BIAS OSCILLATION	
T541	1-433-336-11	TRANSFORMER, BIAS OSCILLATION	

Ref. No.	Part No.	Description	Remarks
		< TEST PIN >	
TP521	* 1-564-506-11	PLUG, CONNECTOR 3P	
TP541	* 1-564-506-11	PLUG, CONNECTOR 3P	
TP581	* 1-564-506-11	PLUG, CONNECTOR 3P	
TP801	* 1-564-505-11	PLUG, CONNECTOR 2P	
TP802	* 1-564-505-11	PLUG, CONNECTOR 2P	
TP803	* 1-564-505-11	PLUG, CONNECTOR 2P	
		< VIBRATOR >	
X801	1-577-358-21	VIBRATOR, CERAMIC 4MHZ	
X802	1-577-358-21	VIBRATOR, CERAMIC 4MHZ	

****

*	1-632-740-11	MD BOARD
		********
	3-356-631-01	HOLDER (SENSOR)
		< CONNECTOR >
CN1001	1-506-615-11	PIN, CONNECTOR 9P
CN1002 *	1-564-502-11	PIN, CONNECTOR 10P
		< DIODE >
IC1001	8-749-920-97	DIODE GP2S22B
IC1002	8-749-920-97	DIODE GP2S22B
		< RESISTOR >
R1001	1-249-408-11	CARBON 180 5% 1/4W
R1002	1-249-408-11	CARBON 180 5% 1/4W
		< SWITCH >
S1002	1-570-953-11	SWITCH, PUSH (1 KEY) (DOOR)
S1003	1-571-958-11	SWITCH, PUSH (1 KEY) (CLOSE)
S1004	1-572-126-11	SWITCH, PUSH (1 KEY) (OPEN)
S1005	1-572-125-11	SWITCH, LEAF (FWD)
S1006	1-572-202-11	SWITCH, LEAF (HALF)
S1007	1-572-125-11	SWITCH, LEAF (METAL)
S1008	1-572-125-11	SWITCH, LEAF (70uS)
S1009	1-572-125-11	SWITCH, LEAF (REV)
		< TERMINAL >
TB1001 *	1-694-018-11	TERMINAL (5P)

****

*	A-2006-726-A	PANEL BOARD, COMPLETE
		**********
	9-911-844-XX	CUSHION
*	3-362-478-11	HOLDER (T), LED
	3-365-420-01	HOLDER, FL TUBE

Note:
The components identified by mark ⚠ or dotted line with mark ⚠ are critical for safety. Replace only with part number specified.

Note:
Les composants identifiés par une marque ⚠ sont critiques pour la sécurité. Ne les remplacer que par une pièce portant le numéro spécifié.

PANEL (including SW (A) / (B) / POWER SW/FL/HP/REC VOL/COVER/POWER TRANSFORMER/DOLBY/PJ)

Ref. No.	Part No.	Description				Remarks
		< CAPACITOR >				
C71	1-124-126-00	ELECT	47uF	20%	10V	
C72	1-124-126-00	ELECT	47uF	20%	10V	
C73	1-124-126-00	ELECT	47uF	20%	10V	
C74	1-124-126-00	ELECT	47uF	20%	10V	
C75	1-124-903-11	ELECT	1uF	20%	50V	
C171	1-126-157-11	ELECT	10uF	20%	16V	
C172	1-162-288-31	CERAMIC	330PF	10%	50V	
C271	1-126-157-11	ELECT	10uF	20%	16V	
C272	1-162-288-31	CERAMIC	330PF	10%	50V	
C371	1-124-927-11	ELECT	4.7uF	20%	100V	
C372	1-124-927-11	ELECT	4.7uF	20%	100V	
C373	1-161-375-00	CERAMIC	0.0022uF	20%	50V	
C375	1-124-927-11	ELECT	4.7uF	20%	100V	
C376	1-136-171-00	FILM	0.33uF	5%	50V	
C377	1-136-174-00	FILM	0.56uF	5%	50V	
C378	1-130-475-00	MYLAR	0.0022uF	5%	50V	
C379	1-130-475-00	MYLAR	0.0022uF	5%	50V	
C380	1-124-768-11	ELECT	4.7uF	20%	50V	
C381	1-124-927-11	ELECT	4.7uF	20%	100V	
C382	1-136-171-00	FILM	0.33uF	5%	50V	
C383	1-136-174-00	FILM	0.56uF	5%	50V	
C384	1-130-475-00	MYLAR	0.0022uF	5%	50V	
C385	1-130-475-00	MYLAR	0.0022uF	5%	50V	
C386	1-124-768-11	ELECT	4.7uF	20%	50V	
C471	1-124-927-11	ELECT	4.7uF	20%	100V	
C472	1-124-927-11	ELECT	4.7uF	20%	100V	
C473	1-161-375-00	CERAMIC	0.0022uF	20%	50V	
C475	1-124-927-11	ELECT	4.7uF	20%	100V	
C476	1-136-171-00	FILM	0.33uF	5%	50V	
C477	1-136-174-00	FILM	0.56uF	5%	50V	
C478	1-130-475-00	MYLAR	0.0022uF	5%	50V	
C479	1-130-475-00	MYLAR	0.0022uF	5%	50V	
C480	1-124-768-11	ELECT	4.7uF	20%	50V	
C481	1-124-927-11	ELECT	4.7uF	20%	100V	
C482	1-136-171-00	FILM	0.33uF	5%	50V	
C483	1-136-174-00	FILM	0.56uF	5%	50V	
C484	1-130-475-00	MYLAR	0.0022uF	5%	50V	
C485	1-130-475-00	MYLAR	0.0022uF	5%	50V	
C486	1-124-768-11	ELECT	4.7uF	20%	50V	
C571	1-126-157-11	ELECT	10uF	20%	16V	
C572	1-126-157-11	ELECT	10uF	20%	16V	
C808	1-164-159-11	CERAMIC	0.1uF		50V	
C809	1-164-159-11	CERAMIC	0.1uF		50V	
C810	1-124-927-11	ELECT	4.7uF	20%	100V	
C899	1-164-159-11	CERAMIC	0.1uF		50V	
C901	1-161-494-00	CERAMIC	0.022uF		25V	
C902	1-164-159-11	CERAMIC	0.1uF		50V	
C903	1-124-443-00	ELECT	100uF	20%	10V	
C904	1-161-375-00	CERAMIC	0.0022uF	20%	50V	
C905	1-161-375-00	CERAMIC	0.0022uF	20%	50V	
C999	1-164-159-11	CERAMIC	0.1uF		50V	

Ref. No.	Part No.	Description	Remarks
		< CONNECTOR >	
CN73	* 1-564-708-11	PIN, CONNECTOR (SMALL TYPE) 6P	
CN74	* 1-564-705-11	PIN, CONNECTOR (SMALL TYPE) 3P	
CN75	1-506-468-11	CONNECTOR 3P, MALE	
CN76	1-564-722-11	PIN, CONNECTOR (SMALL TYPE) 6P	
CN563	* 1-564-705-11	PIN, CONNECTOR (SMALL TYPE) 3P	
CN572	1-691-909-11	SOCKET, CONNECTOR 8P	
CNP71	* 1-691-914-11	CONNECTOR, BOARD TO BOARD 15P	
CNP72	* 1-691-914-11	CONNECTOR, BOARD TO BOARD 15P	
CNP73	* 1-691-469-11	CONNECTOR (PC BOARD) (PLUG) 5P	
CNP74	* 1-691-007-11	CONNECTOR (PC BOARD) (PLUG) 4P	
CNP76	1-573-105-11	CONNECTOR, PC BOARD(RECEPTACLE)	
		< DIODE >	
D71	8-719-987-63	DIODE 1N4148M	
D72	8-719-987-63	DIODE 1N4148M	
D73	8-719-933-54	DIODE HZS9A2L	
D74	8-719-987-63	DIODE 1N4148M	
D75	8-719-987-63	DIODE 1N4148M	
D76	8-719-933-54	DIODE HZS9A2L	
D901	8-719-301-39	DIODE SEL2210S	
		< IC >	
IC71	8-759-634-51	IC M5218AP	
IC72	8-752-059-55	IC CXA1331S	
IC73	8-752-059-55	IC CXA1331S	
IC74	8-759-000-49	IC uPD4066BC	
IC75	8-759-000-49	IC uPD4066BC	
IC76	8-759-000-49	IC uPD4066BC	
IC507	8-759-634-50	IC M5218AL	
IC901	8-759-323-40	IC HD614023SA85	
IC902	8-741-100-48	IC SBX1610-59	
		< JACK >	
J501	1-507-796-71	JACK (PHONES)	
		< FILTER >	
LPF371	1-236-147-11	FILTER, LOW PASS	
LPF471	1-236-147-11	FILTER, LOW PASS	
		< TRANSISTOR >	
Q71	8-729-900-65	TRANSISTOR DTA144ES	
Q72	8-729-900-65	TRANSISTOR DTA144ES	
Q73	8-729-900-65	TRANSISTOR DTA144ES	
Q74	8-729-900-80	TRANSISTOR DTC114ES	
Q75	8-729-900-65	TRANSISTOR DTA144ES	
Q76	8-729-900-65	TRANSISTOR DTA144ES	
Q77	8-729-900-80	TRANSISTOR DTC114ES	
Q78	8-729-900-65	TRANSISTOR DTA144ES	
Q79	8-729-900-89	TRANSISTOR DTC144ES	
Q80	8-729-900-65	TRANSISTOR DTA144ES	
Q81	8-729-900-89	TRANSISTOR DTC144ES	
Q82	8-729-900-65	TRANSISTOR DTA144ES	

PANEL (including SW (A) / (B) / POWER SW/FL/HP/REC VOL/COVER/POWER TRANSFORMER/DOLBY/PJ)

Ref. No.	Part No.	Description				Remarks
Q83	8-729-900-89	TRANSISTOR	DTC144ES			
Q371	8-729-900-80	TRANSISTOR	DTC114ES			
Q471	8-729-900-80	TRANSISTOR	DTC114ES			
Q901	8-729-900-61	TRANSISTOR	DTA114ES			
Q902	8-729-900-61	TRANSISTOR	DTA114ES			
Q903	8-729-620-05	TRANSISTOR	2SC2603-EF			
		< RESISTOR >				
R71	1-249-425-11	CARBON	4.7K	5%	1/4W	
R72	1-215-455-00	METAL	27K	1%	1/6W	
R73	1-249-417-11	CARBON	1K	5%	1/4W	
R74	1-215-455-00	METAL	27K	1%	1/6W	
R75	1-249-417-11	CARBON	1K	5%	1/4W	
R76	1-249-433-11	CARBON	22K	5%	1/4W	
R77	1-249-429-11	CARBON	10K	5%	1/4W	
R78	1-249-433-11	CARBON	22K	5%	1/4W	
R79	1-249-433-11	CARBON	22K	5%	1/4W	
R80	1-249-429-11	CARBON	10K	5%	1/4W	
R81	1-249-433-11	CARBON	22K	5%	1/4W	
R82	1-249-435-11	CARBON	33K	5%	1/4W	
R83	1-249-435-11	CARBON	33K	5%	1/4W	
R84	1-249-435-11	CARBON	33K	5%	1/4W	
R001	1-249-673-11	CARBON	1K	5%	1/2W	
R002	1-249-417-11	CARBON	1K	5%	1/4W	
R171	1-249-432-11	CARBON	18K	5%	1/4W	
R172	1-249-421-11	CARBON	2.2K	5%	1/4W	
R173	1-249-432-11	CARBON	18K	5%	1/4W	
R174	1-249-409-11	CARBON	220	5%	1/4W	
R271	1-249-432-11	CARBON	18K	5%	1/4W	
R272	1-249-421-11	CARBON	2.2K	5%	1/4W	
R273	1-249-432-11	CARBON	18K	5%	1/4W	
R274	1-249-409-11	CARBON	220	5%	1/4W	
R372	1-249-441-11	CARBON	100K	5%	1/4W	
R373	1-249-435-11	CARBON	33K	5%	1/4W	
R374	1-249-432-11	CARBON	18K	5%	1/4W	
R375	1-249-423-11	CARBON	3.3K	5%	1/4W	
R376	1-249-441-11	CARBON	100K	5%	1/4W	
R377	1-249-428-11	CARBON	8.2K	5%	1/4W	
R379	1-249-441-11	CARBON	100K	5%	1/4W	
R381	1-249-414-11	CARBON	560	5%	1/4W	
R382	1-247-864-11	CARBON	24K	5%	1/4W	
R383	1-249-441-11	CARBON	100K	5%	1/4W	
R384	1-249-414-11	CARBON	560	5%	1/4W	
R385	1-247-864-11	CARBON	24K	5%	1/4W	
R386	1-249-441-11	CARBON	100K	5%	1/4W	
R391	1-249-437-11	CARBON	47K	5%	1/4W	
R472	1-249-441-11	CARBON	100K	5%	1/4W	
R473	1-249-435-11	CARBON	33K	5%	1/4W	
R474	1-249-432-11	CARBON	18K	5%	1/4W	
R475	1-249-423-11	CARBON	3.3K	5%	1/4W	
R476	1-249-441-11	CARBON	100K	5%	1/4W	
R477	1-249-428-11	CARBON	8.2K	5%	1/4W	
R479	1-249-441-11	CARBON	100K	5%	1/4W	
R481	1-249-414-11	CARBON	560	5%	1/4W	

Ref. No.	Part No.	Description				Remarks
R482	1-247-864-11	CARBON	24K	5%	1/4W	
R483	1-249-441-11	CARBON	100K	5%	1/4W	
R484	1-249-414-11	CARBON	560	5%	1/4W	
R485	1-247-864-11	CARBON	24K	5%	1/4W	
R486	1-249-441-11	CARBON	100K	5%	1/4W	
R491	1-249-437-11	CARBON	47K	5%	1/4W	
R525	1-247-842-11	CARBON	3K	5%	1/4W	
R545	1-247-842-11	CARBON	3K	5%	1/4W	
R830	1-249-410-11	CARBON	270	5%	1/4W	
R901	1-249-411-11	CARBON	330	5%	1/4W	
R902	1-249-433-11	CARBON	22K	5%	1/4W	
R903	1-249-433-11	CARBON	22K	5%	1/4W	
R904	1-249-417-11	CARBON	1K	5%	1/4W	
R905	1-247-903-00	CARBON	1M	5%	1/4W	
R906	1-249-441-11	CARBON	100K	5%	1/4W	
R907	1-249-441-11	CARBON	100K	5%	1/4W	
R908	1-249-441-11	CARBON	100K	5%	1/4W	
R951	1-249-407-11	CARBON	150	5%	1/4W	
R952	1-249-409-11	CARBON	220	5%	1/4W	
R953	1-249-411-11	CARBON	330	5%	1/4W	
R954	1-249-421-11	CARBON	2.2K	5%	1/4W	
R955	1-249-420-11	CARBON	1.8K	5%	1/4W	
R961	1-249-407-11	CARBON	150	5%	1/4W	
R962	1-249-422-11	CARBON	2.7K	5%	1/4W	
R963	1-249-420-11	CARBON	1.8K	5%	1/4W	
R968	1-249-405-11	CARBON	100	5%	1/4W	
R969	1-249-405-11	CARBON	100	5%	1/4W	
R970	1-249-405-11	CARBON	100	5%	1/4W	
R971	1-249-407-11	CARBON	150	5%	1/4W	
R972	1-249-409-11	CARBON	220	5%	1/4W	
R973	1-249-411-11	CARBON	330	5%	1/4W	
R974	1-249-413-11	CARBON	470	5%	1/4W	
R975	1-249-415-11	CARBON	680	5%	1/4W	
R976	1-249-417-11	CARBON	1K	5%	1/4W	
R977	1-249-420-11	CARBON	1.8K	5%	1/4W	
R978	1-249-424-11	CARBON	3.9K	5%	1/4W	
R981	1-249-407-11	CARBON	150	5%	1/4W	
R982	1-249-409-11	CARBON	220	5%	1/4W	
R983	1-249-411-11	CARBON	330	5%	1/4W	
R984	1-249-413-11	CARBON	470	5%	1/4W	
R985	1-249-415-11	CARBON	680	5%	1/4W	
R986	1-249-417-11	CARBON	1K	5%	1/4W	
R987	1-249-420-11	CARBON	1.8K	5%	1/4W	
R988	1-249-424-11	CARBON	3.9K	5%	1/4W	
R991	1-249-407-11	CARBON	150	5%	1/4W	
R992	1-249-409-11	CARBON	220	5%	1/4W	
R993	1-249-411-11	CARBON	330	5%	1/4W	
R994	1-249-413-11	CARBON	470	5%	1/4W	
R995	1-249-415-11	CARBON	680	5%	1/4W	
R996	1-249-417-11	CARBON	1K	5%	1/4W	
R997	1-249-420-11	CARBON	1.8K	5%	1/4W	
R998	1-249-424-11	CARBON	3.9K	5%	1/4W	

REEL MOTOR

PANEL (including SW (A) / (B) / POWER SW/FL/HP/REC VOL/COVER/POWER TRANSFORMER/DOLBY/PJ)

Ref. No.	Part No.	Description	Remarks
		< VARIABLE RESISTOR >	
RV71	1-241-898-11	RES, VAR, CARBON 10K/10K (DUBBING LEVEL)	
RV521	1-241-895-11	RES, VAR, CARBON 5K (BIAS A)	
RV541	1-241-895-11	RES, VAR, CARBON 5K (BIAS B)	
RV561	1-238-908-11	RES, VAR, CARBON 20K/50K/50K (REC LEVEL)	
RV562	1-241-897-11	RES, VAR, CARBON 50K/50K (BALANCE)	
RV571	1-238-085-11	REA, VAR, CARBON 20K/20K (LEVLEL PHONES)	
		< SWITCH >	
S599	1-554-118-00	SWITCH, PUSH (1 KEY) (MPX FILTER)	
S901	1-554-118-00	SWITCH, PUSH (1 KEY) (POWER)	
S902	1-554-118-00	SWITCH, PUSH (1 KEY) (TAPE SPEED)	
S951	1-554-303-21	SWITCH, TACTILE (BLANK SKIP)	
S952	1-554-303-21	SWITCH, TACTILE (AUTO PAUSE)	
S953	1-554-303-21	SWITCH, TACTILE (AUTO REC LEVEL)	
S954	1-554-303-21	SWITCH, TACTILE (FADER)	
S955	1-571-452-11	SWITCH, SLIDE (DECK B)	
S961	1-571-452-11	SWITCH, SLIDE (TIMER)	
S962	1-571-452-11	SWITCH, SLIDE (DECK A)	
S971	1-554-303-21	SWITCH, TACTILE (A+B REC)	
S972	1-554-303-21	SWITCH, TACTILE (HIGH SPEED)	
S973	1-554-303-21	SWITCH, TACTILE (NORM SPEED)	
S974	1-554-303-21	SWITCH, TACTILE (RESET A)	
S975	1-554-303-21	SWITCH, TACTILE (MEMORY A)	
S976	1-554-303-21	SWITCH, TACTILE (RESET B)	
S977	1-554-303-21	SWITCH, TACTILE (MEMORY B)	
S978	1-571-452-11	SWITCH, SLIDE (DIR MODE)	
S981	1-554-303-21	SWITCH, TACTILE (▲) A DECK	
S982	1-554-303-21	SWITCH, TACTILE (■) A DECK	
S983	1-554-303-21	SWITCH, TACTILE (▷) A DECK	
S984	1-554-303-21	SWITCH, TACTILE (◁) A DECK	
S985	1-554-303-21	SWITCH, TACTILE (❚❚) A DECK	
S986	1-554-303-21	SWITCH, TACTILE (●) A DECK	
S987	1-554-303-21	SWITCH, TACTILE (◀◀) B DECK	
S988	1-554-303-21	SWITCH, TACTILE (▶▶) B DECK	
S989	1-554-303-21	SWITCH, TACTILE (•) B DECK	
S991	1-554-303-21	SWITCH, TACTILE (▲) B DECK	
S992	1-554-303-21	SWITCH, TACTILE (■) B DECK	
S993	1-554-303-21	SWITCH, TACTILE (▷) B DECK	
S994	1-554-303-21	SWITCH, TACTILE (◁) B DECK	
S995	1-554-303-21	SWITCH, TACTILE (❚❚) B DECK	
S996	1-554-303-21	SWITCH, TACTILE (●) B DECK	
S997	1-554-303-21	SWITCH, TACTILE (◀◀) A DECK	
S998	1-554-303-21	SWITCH, TACTILE (▶▶) A DECK	
S999	1-554-303-21	SWITCH, TACTILE (•) A DECK	
		< FLUORESCENT INDICATOR >	
VFD901	1-519-594-11	INDICATOR TUBE, FLUORESCENT	
		< VIBRATOR >	
X901	1-577-359-21	VIBRATOR, CERAMIC 4.19MHZ	

****

Ref. No.	Part No.	Description	Remarks
*	1-632-741-11	REEL MOTOR BOARD	
		**********	
		< CAPACITOR >	
C1051	1-124-907-11	ELECT 10uF 20% 50V	
C1052	1-124-907-11	ELECT 10uF 20% 50V	
C1053	1-164-159-11	CERAMIC 0.1uF 50V	
		< CONNECTOR >	
CN1051	1-564-501-11	PIN, CONNECTOR 8P	
CN1052 *	1-564-720-11	PIN, CONNECTOR (SMALL TYPE) 4P	
CN1053 *	1-564-718-11	PIN, CONNECTOR (SMALL TYPE) 2P	
		< RESISTOR >	
R1051	1-249-414-11	CARBON 560 5% 1/4W	

****

		MISCELLANEOUS	
		**********	
TI	⚠1-450-446-11	TRANSFORMER, POWER(WR990)	
CNJ1	1-558-350-21	CORD (WITH CONNECTOR)(WR99ES:US,Canadian)	
T1	⚠1-450-444-11	TRANSFORMER, POWER (WR99ES:US,Canadian)	
T1	⚠1-450-445-11	TRANSFORMER, POWER (WR99ES:E)	
VS1	⚠1-692-155-11	SELECTOR, POWER VOLTAGE (WR99ES:E)	
D1051	8-719-980-85	DIODE SLF325C	
D1091	8-719-950-74	LED SLR314D	
Q1091	8-729-809-43	TRANSISTOR SPS-314B	
S1001	1-466-525-11	ENCORDER, ROTARY	
57	⚠1-551-188-XX	CORD, POWER (WR99ES:E)	
57	⚠1-590-836-31	CORD, POWER (WR99ES:US,Canadian)	
57	⚠1-555-795-00	CORD, POWER EULOPLUG (WR990)	
60	⚠1-569-007-11	ADAPTER, CONVERSION 2P (WR99ES:E)	

****

Note:
The components identified by mark ⚠ or dotted line with mark ⚠ are critical for safety. Replace only with part number specified.

Note:
Les composants identifiés par une marque ⚠ sont critiques pour la sécurité. Ne les remplacer que par une pièce portant le numéro spécifié.

ACCESSORIES & PACKING MATERIALS
****

Ref. No.	Part No.	Description	Remarks
	1-465-369-11	COMMANDER, REMOTE (RM-J902)(WR99ES:E, WR990)	
	1-558-271-11	CORD, CONNECTION	
	1-558-271-11	CORD, CONNECTION	
	2-181-754-01	COVER, BATTERY (FOR RM-J902)(WR99ES:E WR990)	
*	3-354-915-01	CUSHION(WR99ES)	
*	3-354-913-01	CUSHION(WR990)	
*	3-354-919-41	INDIVIDUAL CARTON(WR99ES)	
*	3-366-699-61	INDIVIDUAL CARTON(WR990)	
	3-677-503-00	SHEET (LARGE), PROTECTION	(WR99ES:US, Canadian)
	3-704-366-01	SCREW (CASE) (M3X8)	
	3-754-915-11	MANUAL, INSTRUCTION (ENGLISH, FRENCH, SPANISH, PORTUGUESE)(WR99ES:Canadian, E, WR990)	
	3-754-915-21	MANUAL, INSTRUCTION (ENGLISH)(WR99ES:US)	
	3-754-915-41	MANUAL, INSTRUCTION (GERMAN, DUTCH, SWEDISH ITALIAN)(WR990)	
	9-910-999-33	INSTRUCTION (WR99ES:US)	

****

HARDWARE LIST
****

Ref. No.	Part No.	Description	Remarks
#1	7-682-548-09	SCREW +BVTT 3X8 (S)	
#2	7-685-133-19	SCREW +BTP 2.6X6 TYPE2 N-S	
#3	7-682-547-04	SCREW +BVTT 3X6 (S)	
#4	7-685-870-01	SCREW +BVTT 3X5 (S)	
#5	7-682-548-04	SCREW +BVTT 3X8 (S)	
#6	7-685-646-79	SCREW +BVTP 3X8 TYPE2 IT-3	
#7	7-621-849-00	SCREW (BV/RING)	
#8	7-621-255-20	SCREW +BVTT 2X4 (S)	
#9	7-621-770-67	SCREW +BVTT 2.6X6 (S)	
#10	7-685-131-19	SCREW +BTP 2.6X4 TYPE2 N-S	
#11	7-621-255-35	SCREW +BVTT 2X5 (S)	
#12	7-685-534-19	SCREW +BTP 2.6X8 (E)	

9-956-971-11

Sony Corporation
Audio Group

English
92D1650-1
Printed in Japan
©1992.4
Published by Customer Relations and Service Group