TC-V33R/V55R

SERVICE MANUAL

TC-V33R:
Canadian Model
AEP Model

TC-V55R:
AEP Model

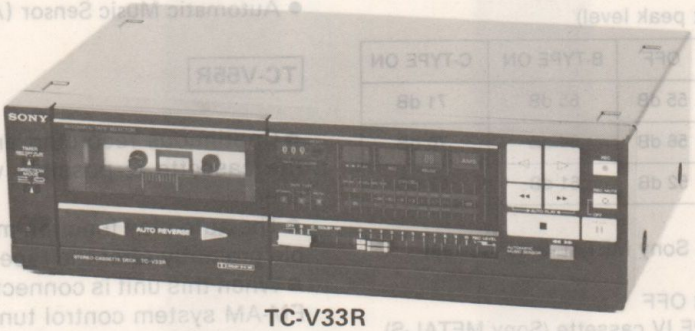

TC-V33R

Note: TC-V33R is a stereo cassette deck unit in LBT-V33R.

TC-V55R

SPECIFICATIONS

TC-V33R

Recording system	4-track 2-channel stereo
Frequency response	DOLBY NR OFF (DIN) With TYPE IV cassette (Sony METAL-S) 30 – 16,000 Hz (±3 dB) With TYPE II cassette (Sony UCX) 30 – 16,000 Hz (±3 dB) With TYPE I cassette (Sony HF-S) 30 – 15,000 Hz (±3 dB)
Wow and flutter	0.055% WRMS (NAB) ±0.17% (DIN)
Dimensions	Approx. 355 x 105 x 245 mm (w/h/d) (14 x 4 1/8 x 9 1/4 inches) incl. projecting parts and controls
Weight	Approx. 3.1 kg (6 lb 14 oz) net

— Continued on next page —

'Dolby' and the double-D symbol are the trade marks of Dolby Laboratories Licensing Corporation. Noise reduction system manufactured under license from Dolby Laboratories Licensing Corporation.

CAUTION:
TC-V33R model cannot repair by itself. Repair it in a component system.

Tape Transport Mechanism Type	TCM-150R6

SAFETY-RELATED COMPONENT WARNING!!

COMPONENTS IDENTIFIED BY SHADING AND MARK ⚠ ON THE SCHEMATIC DIAGRAMS AND IN THE PARTS LIST ARE CRITICAL TO SAFE OPERATION. REPLACE THESE COMPONENTS WITH SONY PARTS WHOSE PART NUMBERS APPEAR AS SHOWN IN THIS MANUAL OR IN SUPPLEMENTS PUBLISHED BY SONY.

ATTENTION AU COMPOSANT AYANT RAPPORT A LA SÉCURITÉ!

LES COMPOSANTS IDENTIFIÉS PAR UNE TRAME ET UNE MARQUE ⚠ SUR LES DIAGRAMMES SCHÉMATIQUES ET LA LISTE DES PIÈCES SONT CRITIQUES POUR LA SÉCURITÉ DE FONCTIONNEMENT. NE REMPLACER CES COMPOSANTS QUE PAR DES PIÈCES SONY DONT LES NUMÉROS SONT DONNÉS DANS CE MANUEL OU DANS LES SUPPLÉMENTS PUBLIÉS PAR SONY.

MICROFILM

STEREO CASSETTE DECK

SONY®

TC

TC-V55R

Recording system
4-track 2-channel stereo

Fast-forward and rewind time
Approx. 90 sec. (with C-60 cassette)

Bias frequency 105 kHz

Signal-to-noise ratio (NAB, at peak level)

Cassette \ Dolby NR switch	OFF	B-TYPE ON	C-TYPE ON
TYPE IV (Sony METAL-S)	55 dB	65 dB	71 dB
TYPE II (Sony UCX)	56 dB	64 dB	70 dB
TYPE I (Sony HF-S)	52 dB	61 dB	67 dB

Total harmonic distortion
1.0% (with Sony METAL-S cassettes)

Frequency response
DOLBY NR OFF
- With TYPE IV cassette (Sony METAL-S)
  20 – 18,000 Hz
  30 – 17,000 Hz (±3 dB)
  30 – 13,000 Hz (±3 dB, 0 VU recording)
  30 – 16,000 Hz (DIN)
- With TYPE II cassette (Sony UCX)
  20 – 18,000 Hz
  30 – 17,000 Hz (±3 dB)
  30 – 16,000 Hz (DIN)
- With TYPE I cassette (Sony HF-S)
  20 – 16,000 Hz
  30 – 15,000 Hz (DIN)

Wow and flutter 0.055% WRMS (NAB)
±0.17% (DIN)

Inputs Line inputs (phono jacks)
Sensitivity 245 mV (−10 dB)
Input impedance 47 k ohms

Outputs Line outputs (phono jacks)
Output level 0.44 V (−5 dB) at load impedance 47 k ohms
Load impedance over 10 k ohms

General

Power requirements
220 V ac, 50/60 Hz
(240 V ac adjustable by authorized Sony personnel)

Power consumption
16 watts

Dimensions Approx. 355 × 105 × 245 mm (w/h/d)
(14 × 4 1/8 × 9 3/4 inches)
including projecting parts and controls

Weight Approx. 3.9 kg (8 lbs 10 oz)

Note

This appliance conforms with EEC Directives 76/889 and 82/499 regarding interference suppression.

FEATURES

TC-V33R

- The B-type and C-type Dolby NR circuit incorporated.
- Automatic tape select system.
- Automatic Music Sensor (AMS).

TC-V55R

- Continuous recording and playback of both sides of the cassette is possible without turning the cassette over.
- The auto play function makes automatic replay possible promptly after the tape is rewound to the beginning.
- When this unit is connected to the optional FM stereo/FM-AM system control tuner ST-V77/V77L, total system remote control and direct function* are possible. For details, refer to the ST-V77/V77L Operating Instructions.
- Synchronized operation with the optional Sony PS-FL770, PS-LX550 turntable system
- Fine feather touch operation
- AMS (Automatic Music Sensor)
- C-type Dolby NR (noise reduction) system
- Automatic tape select system
- Timer-activated recording or playback

*With the direct function, the amplifier operation mode will automatically be changed simply by pressing the operation key of the required equipment. For example, when you want to change to listen to a taped program during FM listening, press the ▷ or ◁ key. The operation mode of the amplifier is automatically set to TAPE and tape playback starts.

FUNCTION OF CONTROLS

A

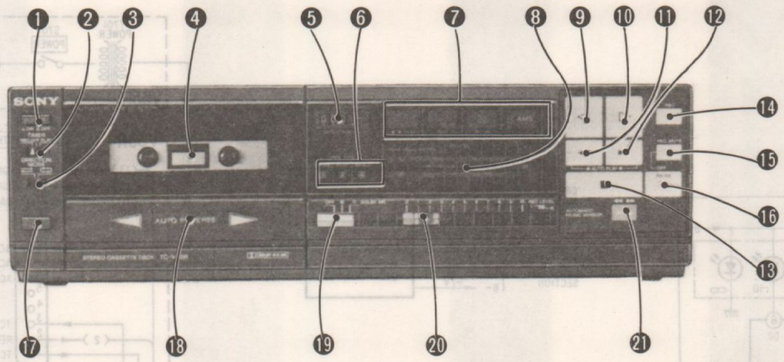

Photo: TC-V55R

B

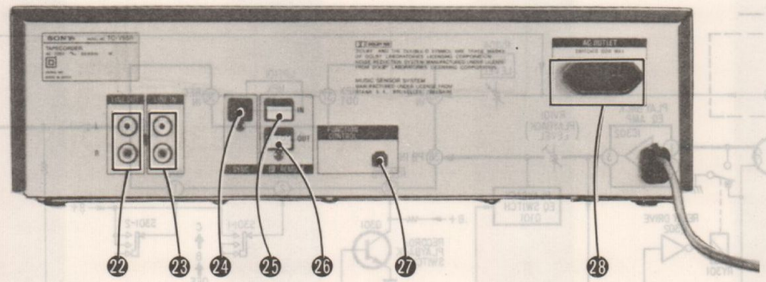

Photo: TC-V55R

TC-V33R/V55R

Front panel (Photo A)

❶ POWER switch : TC-V55R only

❷ TIMER switch
You can set the unit to record or playback at a predetermined time by connecting any commercially available timer.

❸ DIRECTION MODE switch
⟲ : for recording both sides or repeat playback of both sides of a cassette. If the switch is set to this position when the reverse side of the cassette is being recorded, the tape will stop at the end of that side.
⇄ : for recording or playing back one side of the cassette.

❹ Cassette holder

❺ TAPE COUNTER and RESET button
The tape counter provides a numerical reference point while recording which can be used to index a recorded cassette. To reset to zero, press the RESET button.

❻ TAPE type indicators
When a cassette is inserted, the appropriate TAPE type indicator lights and the optimum recording and playback settings of the tape are set by the automatic tape select system.

❼ Function indicators

❽ PEAK LEVEL METERs
These meters show the peak input level of each channel during recording, and recorded levels in the playback mode.

❾ ◁ (reverse play) key
Press this key to play back the reverse side of the cassette. To record on the reverse side, press this key while holding the ● key down. The tape will be transported to the left.

❿ ▷ (forward) key
Press this key to play the front side of the cassette. To record, press this key while holding the ● key down. The tape is transported to the right.

⓫ ◀◀ (fast-reverse) key
Press this key to advance the tape rapidly to the left. It is also used for the auto play and the AMS functions.

⓬ ▶▶ (fast-forward) key
Press this key to advance the tape rapidly to the right. It is also used for the auto play and the AMS functions.

⓭ ■ (stop) key

⓮ ● (record) key
Press this key together with the ▷ or ◁ key to start recording.

⓯ ○ (record muting) key
Press this key to eliminate unwanted material and to insert a blank space during recording.

⓰ ❚❚ (pause) key
Press this key to stop the tape running for a moment during recording or playback.

⓱ ⏏ (eject) button
Press this button to open the cassette holder.

⓲ Direction indicators
FWD ▷ (forward) indicator: Lights to show that the front side of the cassette is being played back or recorded on.
REV ◁ (reverse) indicator: Lights to show that the reverse side of the cassette is being played back or recorded on.

⓳ DOLBY NR switch
For recording or playback with Dolby B-type system, set the DOLBY NR switch to B. For recording or playback with Dolby C-type NR system, set it to C. For recording without Dolby NR system, set it to OFF.

*The Dolby NR system reduces tape hiss and improves the signal-to-noise ratio at low-level high-frequency signals.

"Dolby" and the double-D symbol are trade marks of the Dolby Laboratories Licensing Corporation. Noise reduction system manufactured under license from Dolby Laboratories Licensing Corporation.

⓴ REC LEVEL (recording level) controls
These controls adjust the recording level.

㉑ AMS key
To activate the AMS function, press this key. The AMS indicator lights. To cancel this function, press it again. The indicator goes off.

TC-V55R

Rear panel (Fig. B)

㉒ LINE OUT (line output) jacks (phono jack)
Accepts tape inputs from an amplifier for playing back a tape and line inputs from another tape deck for duplicating a tape onto that unit.

㉓ LINE IN (line input) jacks (phono jack)
Accepts tape outputs from an amplifier for tape recording and line outputs from another tape deck when duplicating a tape from that unit.

㉔ SYNC connector
For synchro recording, connect to the SYNC connector of the turntable. For further details, refer to the instruction manual of the Sony turntable system PS-FL770 or PS-LX550.

㉕ REMOTE IN (remote control input) connector
Use this connector for total audio system remote control. For details, refer to the Operating Instructions of the optional Sony ST-V77/V77L system control tuner.

㉖ REMOTE OUT (remote control output) connector
Use this connector for total audio system remote control. For details, refer to the Operating Instructions of the optional Sony ST-V77/V77L system control tuner.

㉗ FUNCTION CONTROL connector
Connect this connector to the TAPE RECORDER direct function connector of the ST-V77/V77L system control tuner for direct operation.

㉘ AC OUTLET

SECTION 1
OUTLINE

1-1. BLOCK DIAGRAM

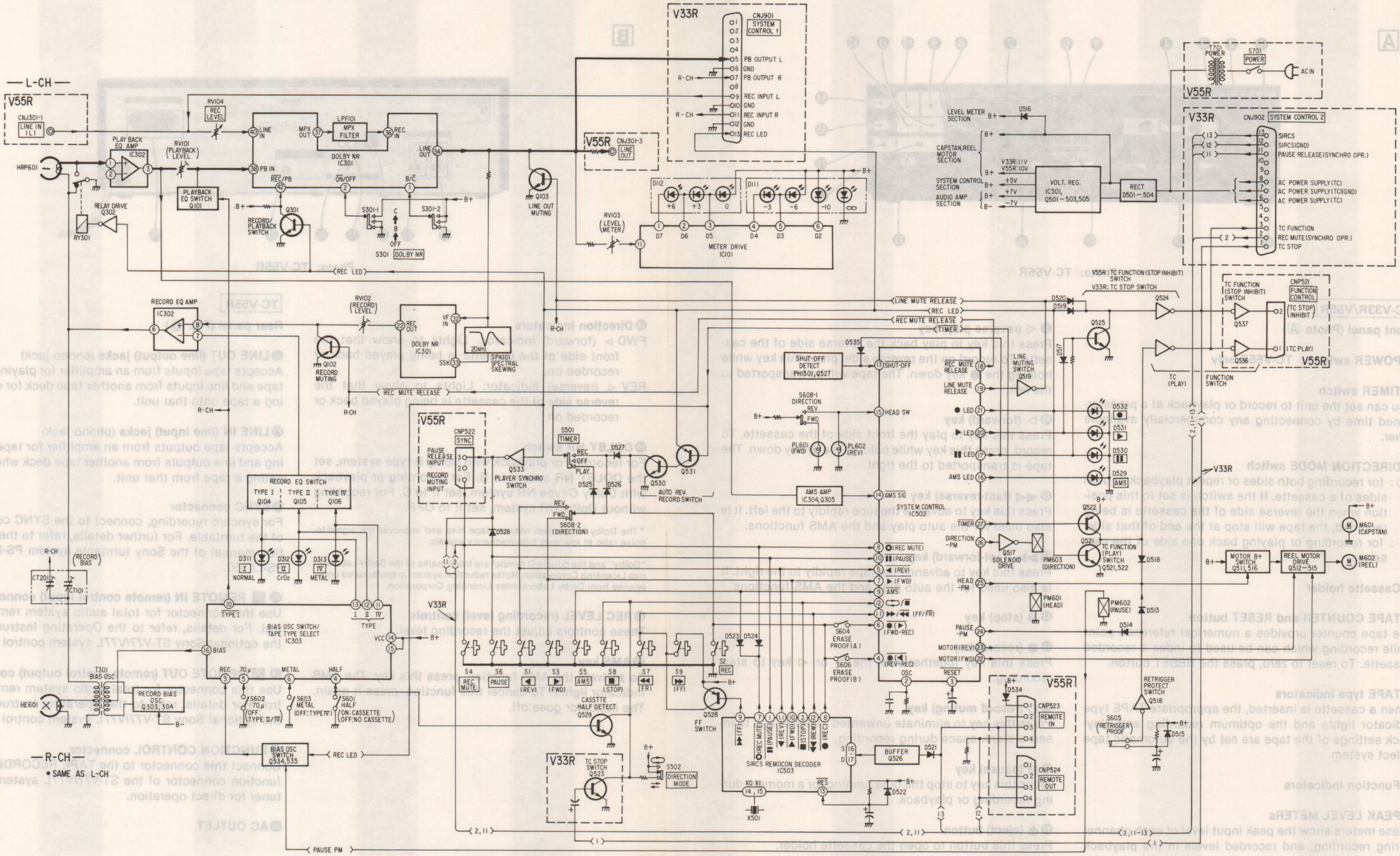

1-2. CIRCUIT DESCRIPTION

TC9312N-001 (IC502) FUNCTION OF EACH TERMINAL

Terminal No.	Name	In/Out	Function
1	GND	–	Grounding terminal of power supply.
2	OSC	–	Clock oscillator terminal. (approx. 6.3 kHz in this set.) 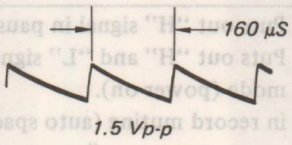
3	$\overline{\text{RESET}}$	Input	Signal input to put all of the operation of the set into the initial state.
4	$\overline{\bullet}$ (◀) (REV-REC)	Input	Signal input to command the set to become in reverse-record mode.
5	$\overline{\text{◀ (REV)}}$	Input	Signal input to command the set to reverse playback the tape.
6	$\overline{\bullet}$ (▶) (FWD-REC)	Input	Signal input to command the set to become in forward-record mode.
7	$\overline{\text{▶ (FWD)}}$	Input	Signal input to command the set to forward playback the tape.
8	$\overline{\text{o}}$ (REC MUTE)	Input	Command-signal input to mute record signal and effective only in record and record-pause mode. When this signal is in "L", pause operation is reset. Muting operation is maintained for four seconds after disappearance of this signal (auto-space operation). Auto space operation is released on receipt of $\overline{\text{PAUSE}}$ input in "L" when this input is in "H".
9	$\overline{\text{AMS}}$	Input	Signal input to put the set into AMS mode.
10	$\overline{\text{II}}$ (PAUSE)	Input	Command-signal input to make the set in stop operation temporarily, i.e., pause, or restart operation during playback and record mode. In auto-space operation, this terminal is command-signal input to release record muting mode in case $\overline{\text{REC MUTE}}$ is in "H".
11	▶▶/◀◀ (FF/$\overline{\text{FR}}$)	Input	This terminal has 3 state value. Signal input to command the mechanism to set in fast-forward or fast-reverse mode. Signal: "H" pulse (⎍ 2.6 V): fast-forward mode "L" pulse (⎌ 2.6 V): fast-reverse mode Middle potential (+2.6 V): otherwise mode
12	⟲/■	Input	This terminal has 3 state value. Signal input to command the DIRECTION MODE (⟲ or ⇄) and to release a mode designated by other input switches. Signal: "H" potential (+5 V): DIRECTION MODE ⟲ Middle potential (+2.6 V): DIRECTION MODE ⇄ "L" pulse (⎌ 2.6 V or 5 V): stop mode
13	$\overline{\text{SHUT-OFF}}$	Input	Pulse signal is put into this terminal during playback, record, fast-forward and fast-reverse mode. In those mode, the mechanism is shut off in two seconds after the stop-page of tape travel.
14	$\overline{\text{AMS SIG}}$	Input	Tape blank space detection signal input terminal.

Terminal No.	Name	In/Out	Function
15	HEAD SW	Input	Signal input to detect the direction of head. "L": forward direction "H": reverse direction
16	AMS LED	Output	Puts out "H" signal in AMS mode. Otherwise; L
17	▮▮ LED	Output	Puts out "H" signal in pause mode. Puts out "H" and "L" signals alternatly during record muting and reset mode (power on). in record muting (auto space) 4 sec. pause mode record mute on more than four seconds in reset (power on) power on
18	REC MUTE RELEASE	Output	Puts out "L" signal in record mode. Otherwise; H.
19	LINE MUTE RELEASE	Output	Puts out "H" signal in playback and record mode. Otherwise; L.
20	▶ LED	Output	Puts out "H" signal in playback and record mode. Otherwise; L.
21	● LED	Output	Puts out "H" signal in record mode. Otherwise; L.
22	MOTOR (FWD)	Output	This terminal puts out for motor rotating signal to forward. "H": forward-playback, forward-record, fast-forward. Otherwise; L.
23	MOTOR (REV)	Output	This terminal puts out for motor rotating signal to reverse. "H": reverse-playback, fast-reverse, reverse-record. Otherwise; L.
24	PAUSE-PM	Output	Puts out "H" signal in playback, record, fast-forward, fast-reverse, play-pause, and record-pause mode to release the brake. Otherwise; L.
25	HEAD-PM	Output	Puts out "H" signal in playback and record mode. Otherwise; L.
26	DIRECTION-PM	Output	Puts out "H" pulse (5 V / 0 V) signal when the head rotates. (head direction: forward to reverse or reverse to forward)
27	$\overline{\text{TIMER}}$	Output	This terminal puts out signal as shown below. TAPE FUNCTION signal 0.67 sec. stop playback TIMER PLAY/REC signal 2 sec. 0.67 sec. power on
28	VDD	–	5 V power supply terminal.

SECTION 2
DISASSEMBLY

Note: Follow the disassembly procedure in the numerical order given.

CASE REMOVAL

Remove case by taking out four screws securing case.

CASSETTE WINDOW REMOVAL

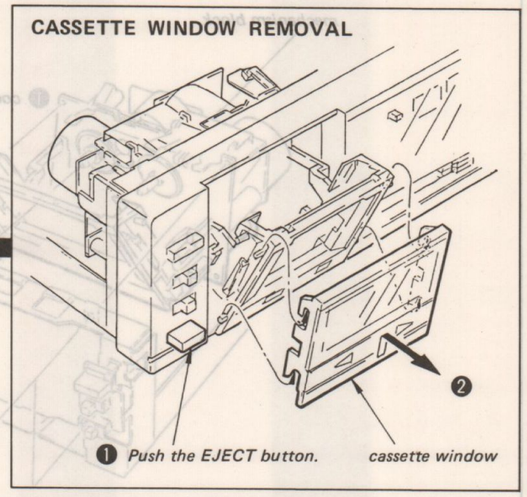

FRONT PANEL REMOVAL

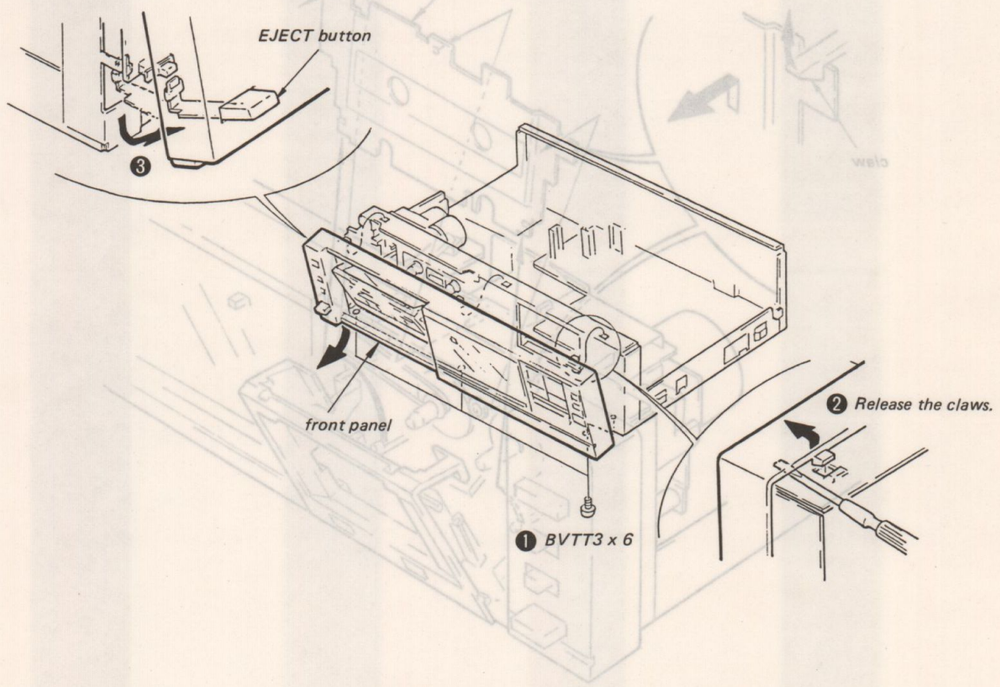

MECHANISM BLOCK AND COUNTER BELT

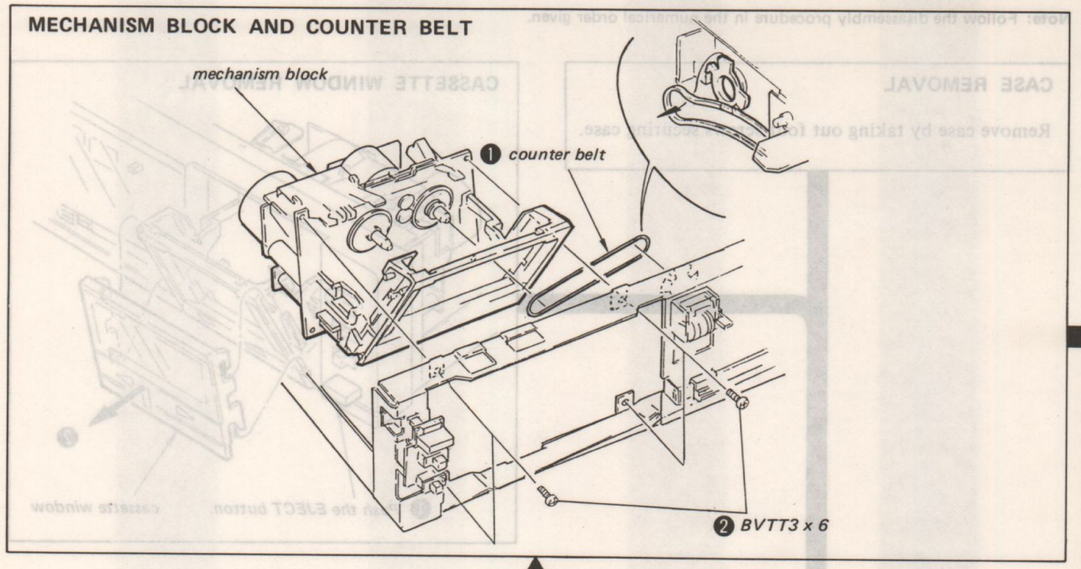

ORNAMENTAL PLATE REMOVAL

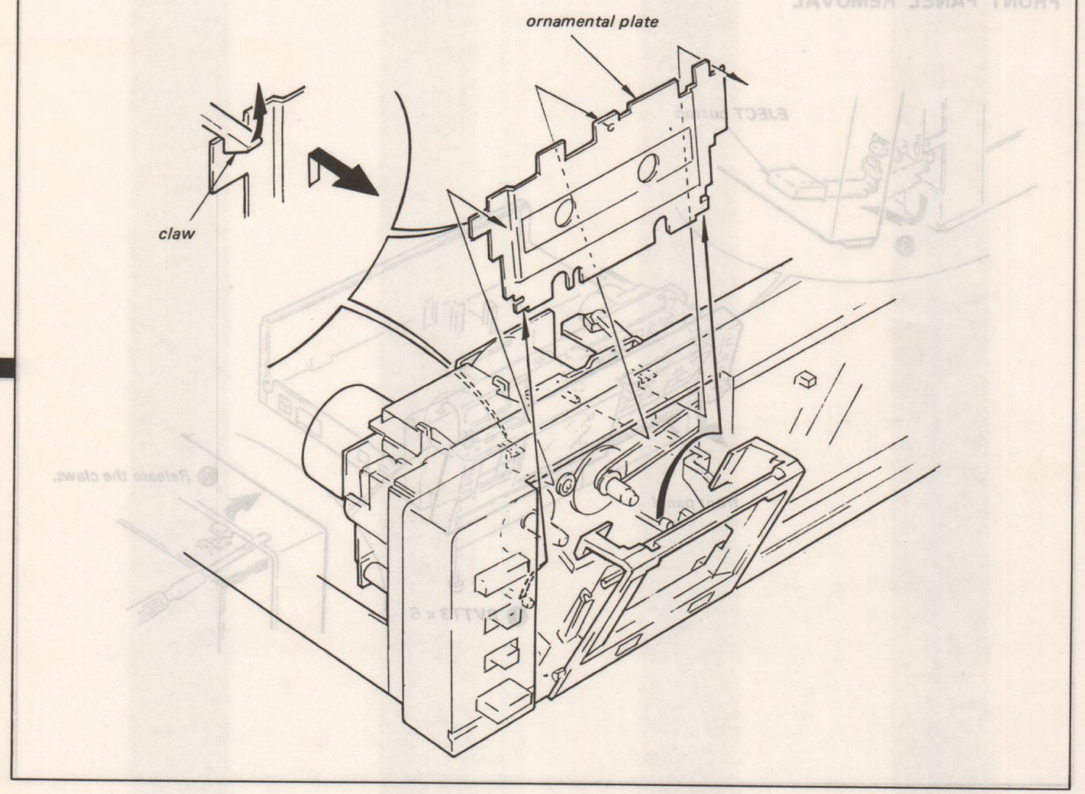

CAPSTAN MOTOR AND CAPSTAN BELT

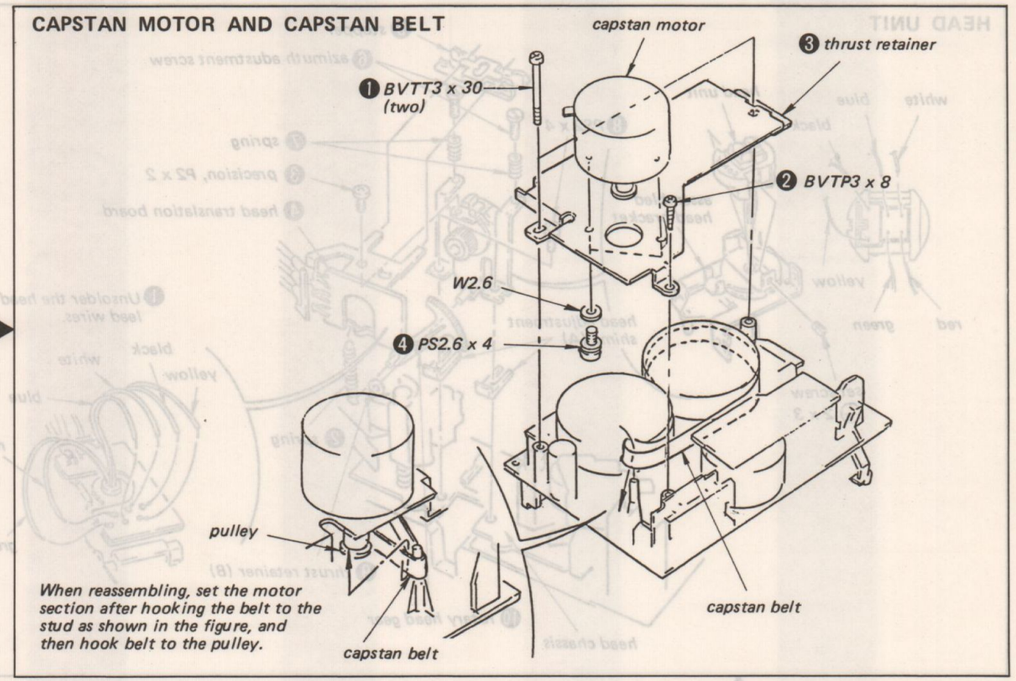

When reassembling, set the motor section after hooking the belt to the stud as shown in the figure, and then hook belt to the pulley.

CASSETTE HOLDER

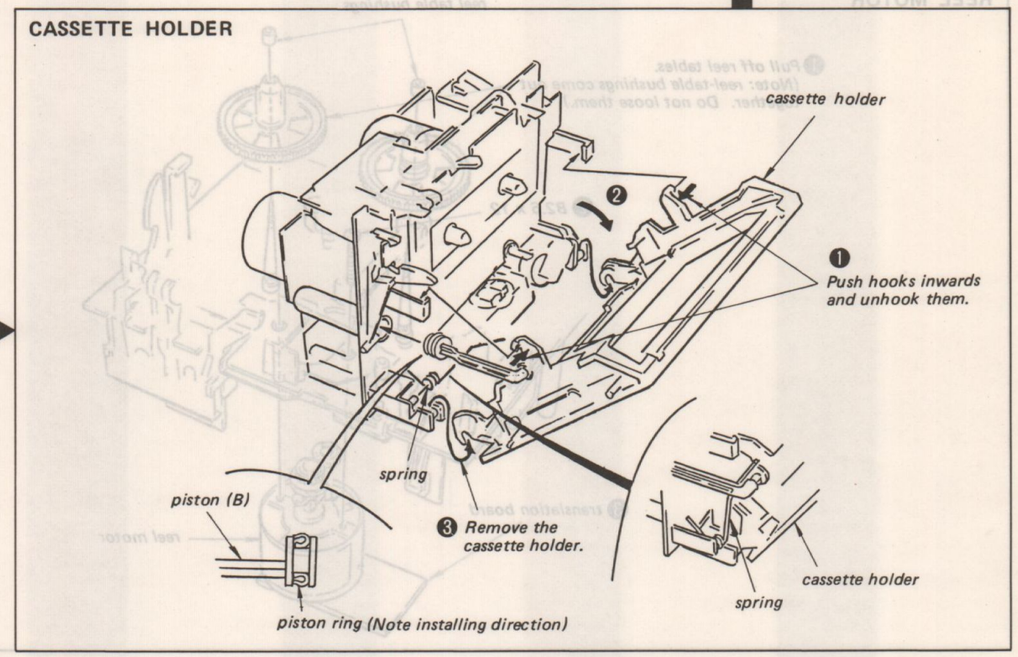

HEAD UNIT

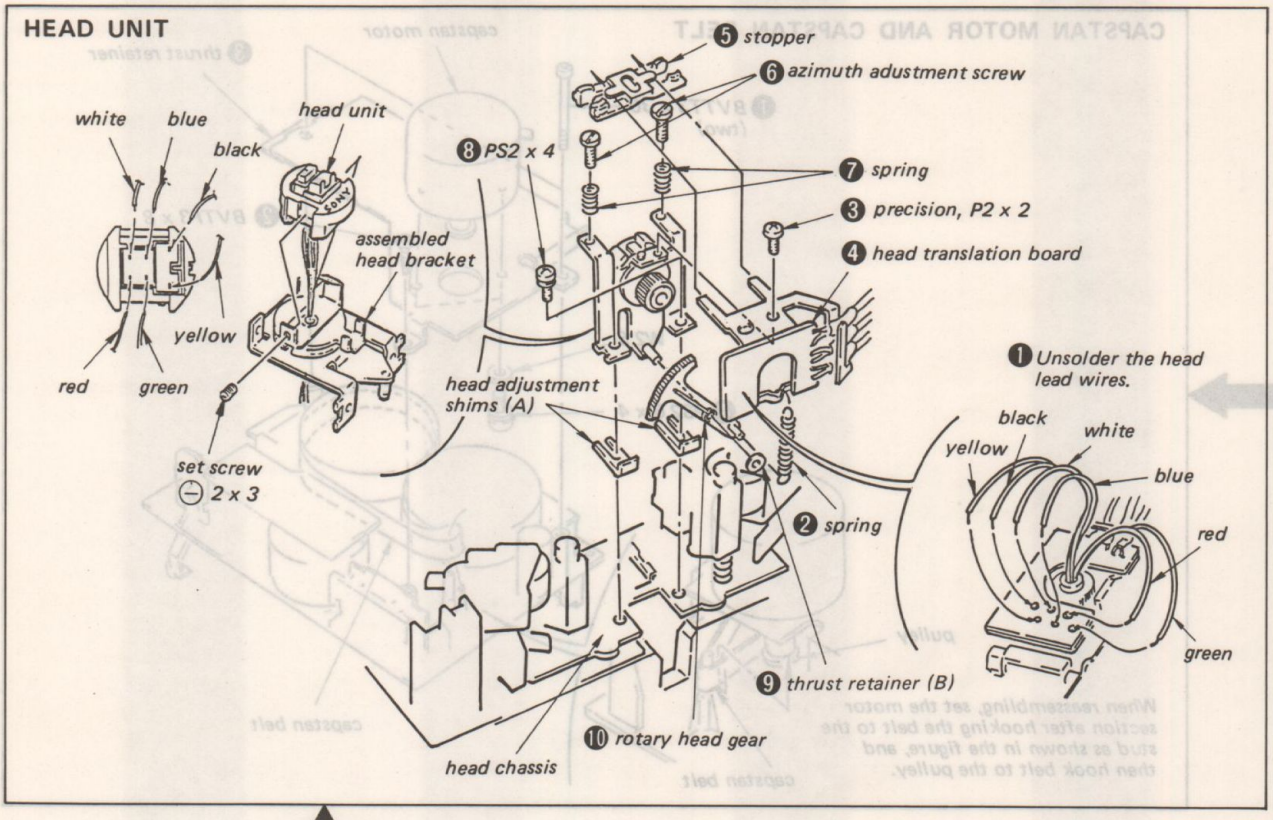

REEL MOTOR

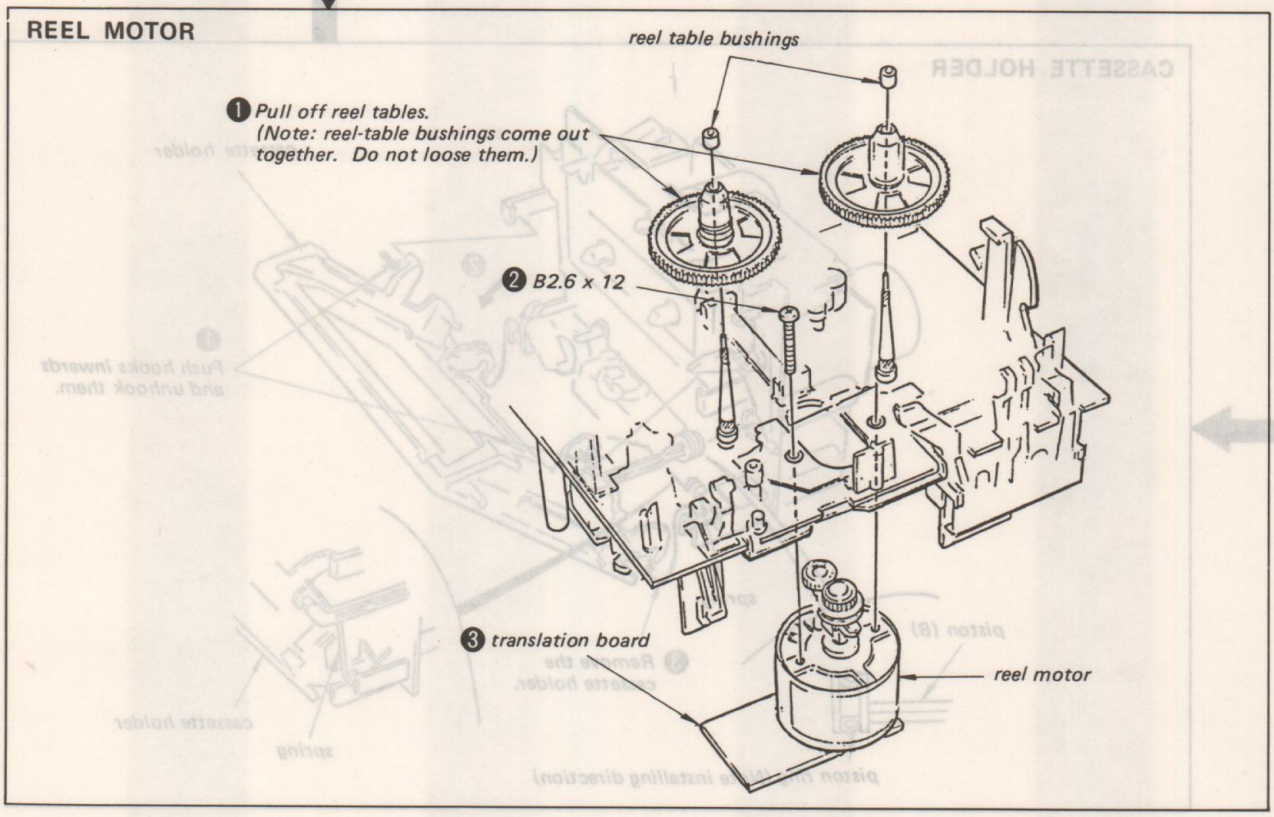

SECTION 3
ADJUSTMENTS

3-1. MECHANICAL ADJUSTMENTS

PRECAUTION

1. Clean the following parts with a denatured-alcohol-moistened swab:
   record/playback/erase head rubber belts
   capstan
   pinch roller
2. Demagnetize the head with a head demagnetizer.
3. Do not use a magnetized screwdriver for the adjustments.
4. After the adjustments, apply suitable locking compound to the parts adjusted.
5. The adjustments should be performed with the rated power supply voltage unless otherwise noted.

Torque Measurement

Torque	Torque meter	Meter reading
Forward	CQ-102C	28 – 60 g·cm (0.39 – 0.82 oz·inch)
Reverse	CQ-102RB	
Fast Forward and Rewind	CQ-201B	80 – 150 g·cm (1.1 – 2.07 oz·inch)
Forward Back Tension	CQ-102C	2.5 – 5.5 g·cm (0.03 – 0.07 oz·inch)
Reverse Back Tension	CQ-102RB	2.5 – 7 g·cm (0.03 – 0.09 oz·inch)

BACK TENSION ADJUSTMENT
– Forward and Reverse Playback Modes –

Forward: Torque Meter CQ-102C, Torque 2.5 – 5.5 g·cm (0.03 – 0.07 oz·inch)

Reverse : Torque Meter CQ-102RB, Torque 2.5 – 7 g·cm (0.03 – 0.09 oz·inch)

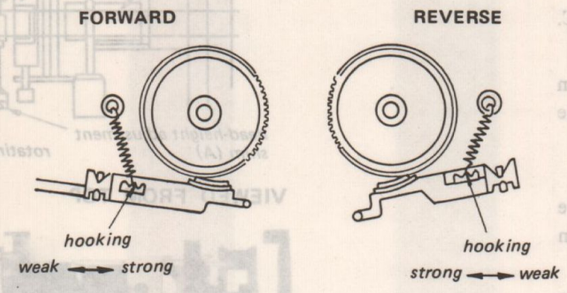

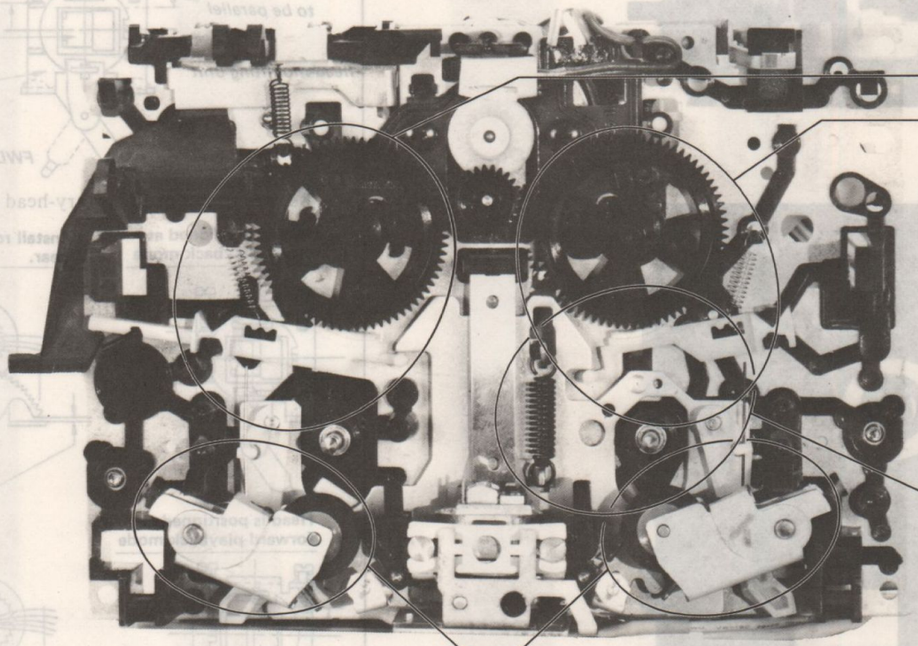

Pinch Roller Pressure Measurement

– Playback Mode –

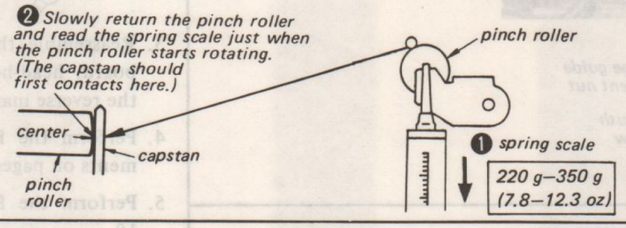

Head Position Adjustment in AMS mode

1. Prepare an adjustment cassette as shown below.

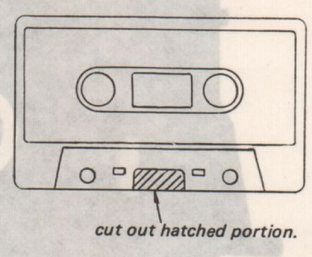

2. In AMS mode, comfirm that the the distance between top of head and bottom of cassette is 2 mm ±0.1 mm (3/32 inch).

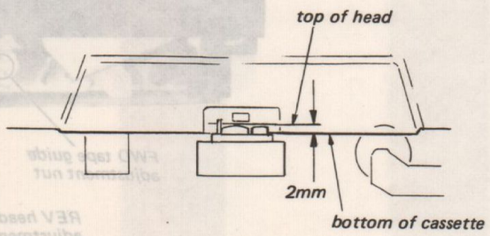

If it is not, insert a small screwdriver to the adjustment hole and adjust the head position by bending a head-base so that the distance between top of head and bottom of cassette is 2 mm±0.1 mm.

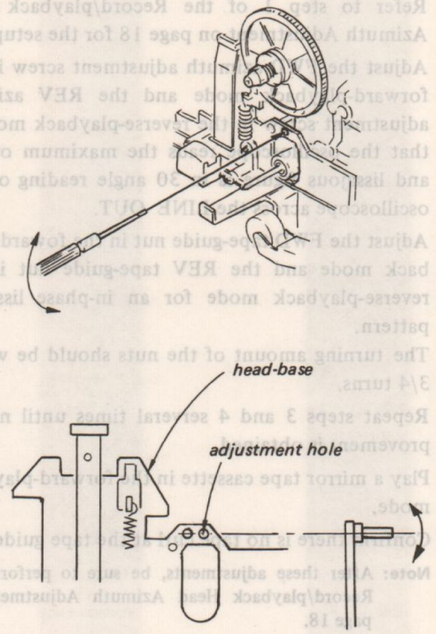

Precaution on Replacing

As the head center adjustment and the tape path adjustment are affected each other, do not perform them at the same time.

Note: When the record/playback/erase head is replaced, be sure to perform the preliminary adjustment first.

Head Center Adjustment

1. Insert a mirror tape cassette, CQ-009C or CQ-012C.
2. Place the unit in forward playback mode.
3. When the lower part of the tape is warped, loosen the head center adjustment screw. (Loosen the screw within one turn.)
4. Place the unit in reverse-playback mode.
5. When the upper part of the tape is warped, secure the adjustment screw. (Secure the screw within one turn.)
6. Repeat steps 2 to 5 several times until there is no warp both in forward and reverse mode.
7. If the warp is not disappeared, repeat steps 2 to 6 after adding or removing the head height adjustment shim (A).
8. After adjustment, lock the head center adjustment screw with locking compound.

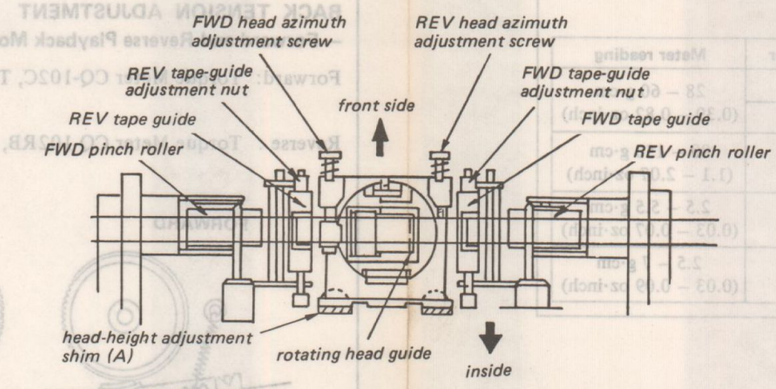

VIEWED FROM TOP

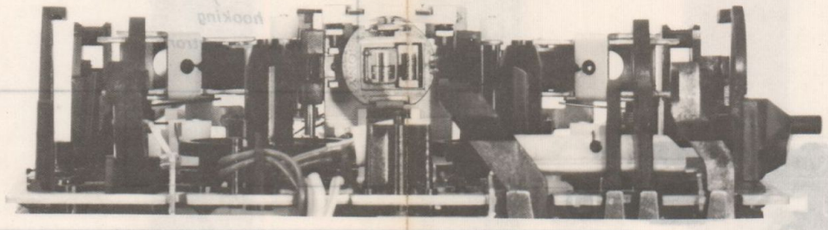

Tape Path Adjustment

1. Clean the pinch roller and the record/playback/erase head with soft cloth moistened with alcohol.
2. Mode: playback
   Refer to step 1 of the Record/playback Head Azimuth Adjustment on page 18 for the setup.
3. Adjust the FWD azimuth adjustment screw in the forward-playback mode and the REV azimuth adjustment screw in the reverse-playback mode so that the oscilloscope reads the maximum output and lissajous figure is in 30 angle reading on the oscilloscope across the LINE OUT.
4. Adjust the FWD tape-guide nut in the foward-playback mode and the REV tape-guide nut in the reverse-playback mode for an in-phase lissajous pattern.
   The turning amount of the nuts should be within 3/4 turns.
5. Repeat steps 3 and 4 serveral times until no improvement is obtained.
6. Play a mirror tape cassette in the forward-playback mode.
7. Confirm there is no tape curl at the tape guide.

Note: After these adjustments, be sure to perform the Record/playback Head Azimuth Adjustment on page 18.

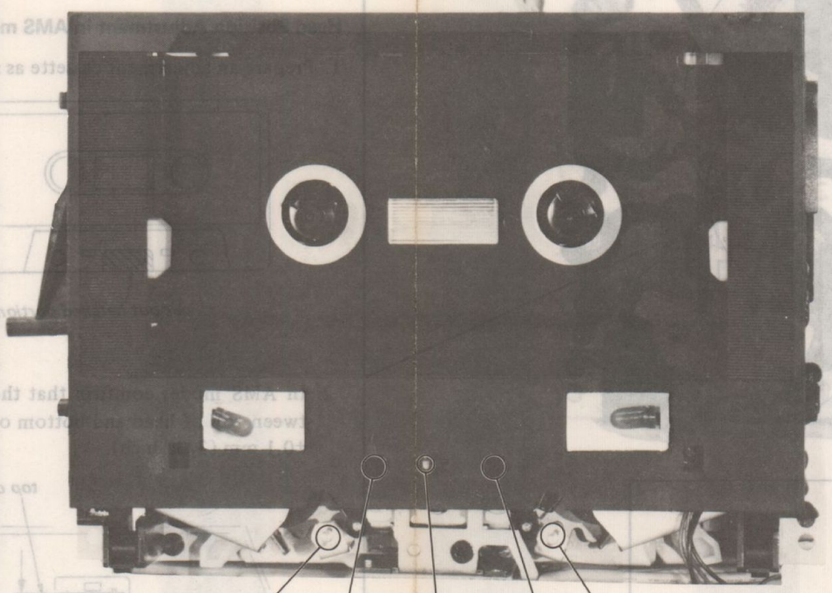

HEAD UNIT ADJUSTMENT WHEN REPLACED

Perform the following preliminary adjustments before proceeding to the Head Center and Tape Path Adjustments.

Preliminary Adjustment

1. Install head-mounting unit on the head-mounting base by threading head lead wires through the round hole in the head-mounting base. Also refer to page 12.
2. By adjusting both head-azimuth adjustment screws in both forward-playback and reverse-playback mode head positions, align the head-compartment edge line in parallel with the edge line of the head-mounting unit at the azimuth adjustment screws. (visual adjustment)

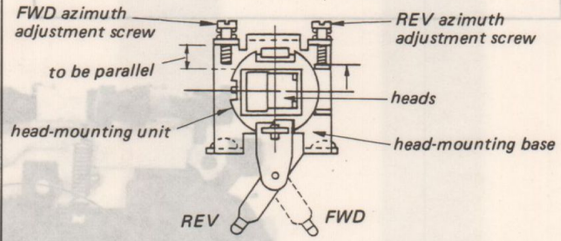

Be sure to orient the rotary-head gear as shown below.

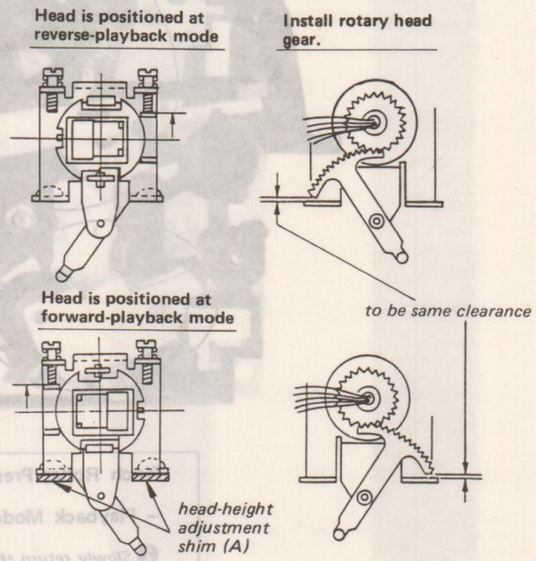

3. Reassemble the head assembly, head translation board, head-height adjustment shims (A), etc, in the reverse manner of disassembly on page 12.
4. Perform the Head-Center and Tape-Path Adjustments on pages 15 and 16.
5. Perform the Head-Azimuth Adjustment on page 18.

3-2. ELECTRICAL ADJUSTMENTS

Note: The adjustment should be performed in the order given in this service manual.
The adjustments should be performed for both L-CH and R-CH.

- Switches and controls should be set as follows unless otherwise specified.
  DOLBY NR switch: OFF
  TIMER switch: OFF
- Standard Record:
  Deliver the standard input signal level to the input jack and set the REC LEVEL control to obtain the standard output signal level.

– Record Mode –

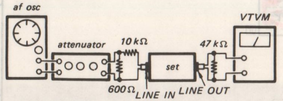

Standard Input Level

	LINE IN
source impedance	10 kΩ
input level	0.25 V (−10 dB)

Standard Output Level

	LINE OUT
load impedance	47 kΩ
output level	0.44 V (−5 dB)

Locations of LINE IN and LINE OUT for TC-V33R

	CNJ901 terminal No.		
	L-CH	R-CH	GND
LINE IN	9	11	10
LINE OUT	5	7	6

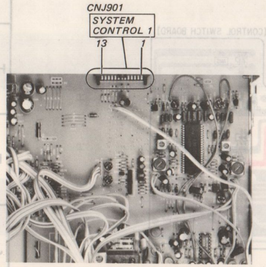

Tape Speed Adjustment

Procedure:

See the left for locations of LINE IN and LINE OUT for TC-V33R.

Mode: forward-playback

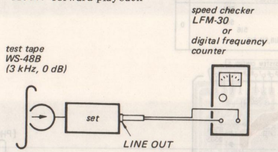

Specification:

Speed checker	Digital frequency counter
−1 ~ +1 %	2,970 Hz to 3,030 Hz

Frequency difference between the beginning and the end of the tape should be within 0.8% (25Hz).

Adjustment Location: Motor (M602)

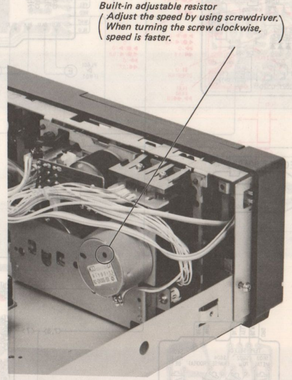

PHOTO: TC-V33R

Record/playback Head Azimuth Adjustment

Procedure:

See page 17 for locations of LINE IN and LINE OUT for TC-V33R.

1. Mode: forward-playback

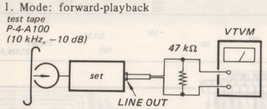

2. Turn the adjustment screw for the maximum output levels. If these levels do not match, turn the adjustment screws until both of output levels match together within 1 dB.

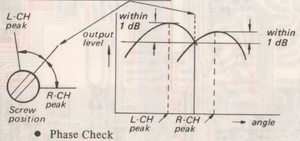

- Phase Check

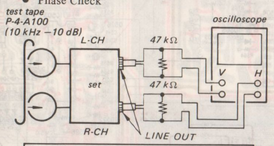

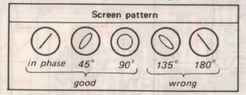

3. Set in the reverse-playback mode and repeat the steps 1 – 2.
4. After the adjustment, lock the screws with locking compound.

Adjustment Location:

PHOTO: TC-V33R

Playback Level Adjustment

Procedure:

See page 17 for locations of LINE IN and LINE OUT for TC-V33R.

Mode: playback

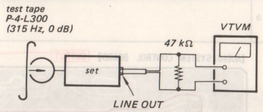

Adjust the RV101 (L-CH) and RV201 (R-CH) so that the specification is met.

Specification:

LINE OUT level: 0.41 to 0.46 V
(−5.5 to −4.5 dB)

Level difference between channels:
less than 0.5 dB

Check that the LINE OUT level does not change in playback mode while changing the mode from playback to stop several times.

Adjustment Location: audio board

PHOTO: TC-V33R

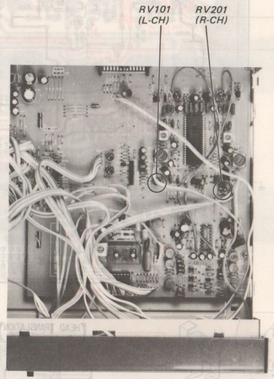

Record Bias Adjustment

Setting:

REC LEVEL control: standard record
(See page 17.)

Procedure:

See page 17 for locations of LINE IN and LINE OUT for TC-V33R.

1. Mode: record

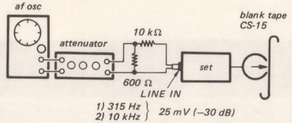

2. Mode: playback

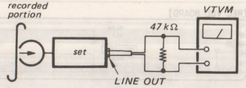

Confirm that the 10 kHz playback output is 0 dB relative to the 315 Hz output. If necessary, adjust CT101 (L-CH), CT201 (R-CH) and repeat the steps given above.

Adjustment Location: audio board

PHOTO: TC-V33R

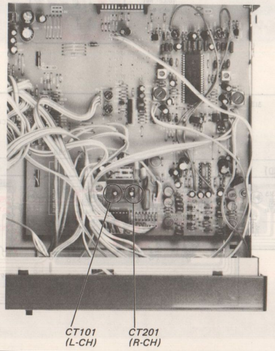

Record Level Adjustment

Setting:

REC LEVEL control: standard record
(See page 17.)

Procedure:

See page 17 for locations of LINE IN and LINE OUT for TC-V33R.

1. Mode: record

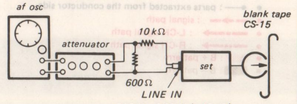

2. Mode: playback

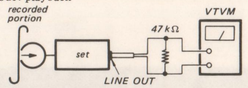

3. Play back the signal recorded in step 1.
Confirm that the signal level is within the specification below. If necessary, adjust RV102 (L-CH), RV202 (R-CH) and repeat the steps 1 – 3.

Specification:

LINE OUT level: 0.41–0.46 V
(−5.5 to −4.5 dB)

Adjustment Location: audio board

PHOTO: TC-V33R

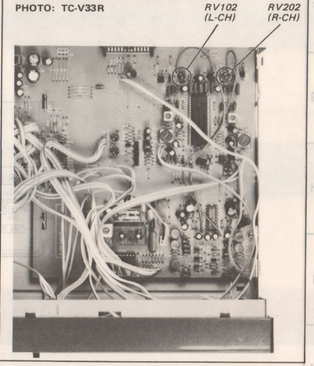

Level Meter Calibration

Procedure:

See page 17 for locations of LINE IN and LINE OUT for TC-V33R.

1. Mode: record

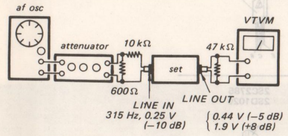

2. Set the REC LEVEL control so that the LINE OUT level is 0.44 V (−5 dB).
3. Adjust RV103 (L-CH), RV203 (R-CH) so that the 0VU (−3 dB) segment of the level meter goes on.
   Note: The adjustment should be made while increasing the level.
4. Set the REC LEVEL control so that the LINE OUT level is 1.7 V (+7 dB). Make sure that all the lights in the segments go on.

Adjustment Location: audio board

PHOTO: TC-V33R

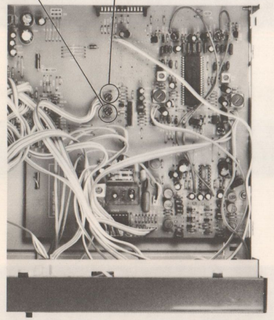

SECTION 4
DIAGRAMS

- Semiconductor Lead Layouts

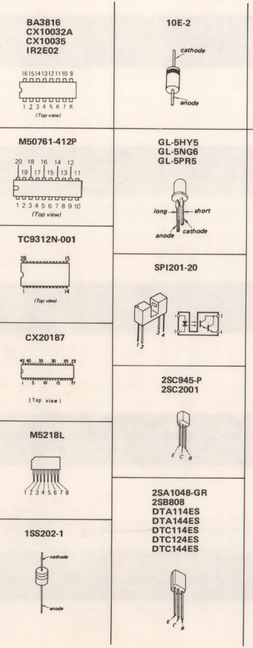

4-1. MOUNTING DIAGRAM (TC-V33R)

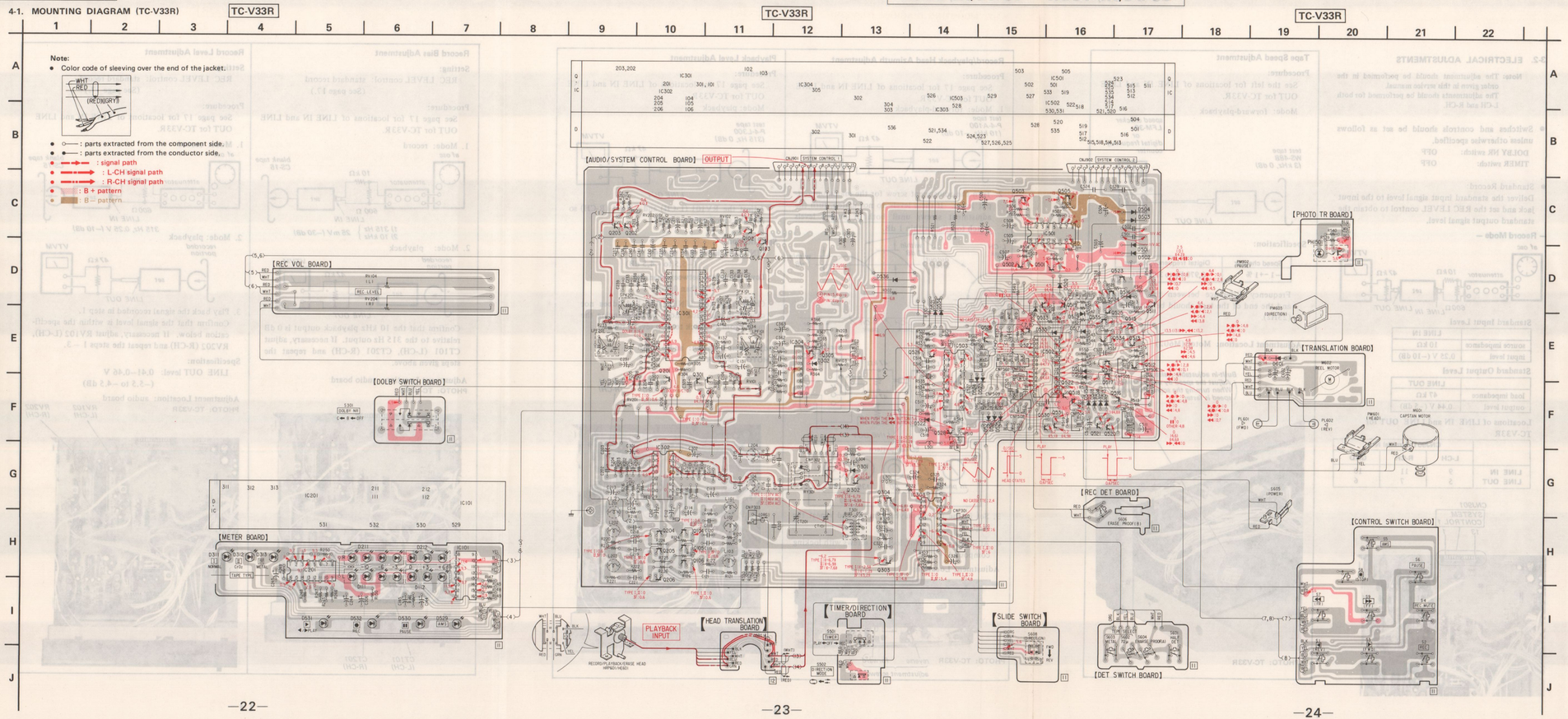

TC-V33R/V55R TC-V33R/V55R

4-2. SCHEMATIC DIAGRAM (TC-V33R)

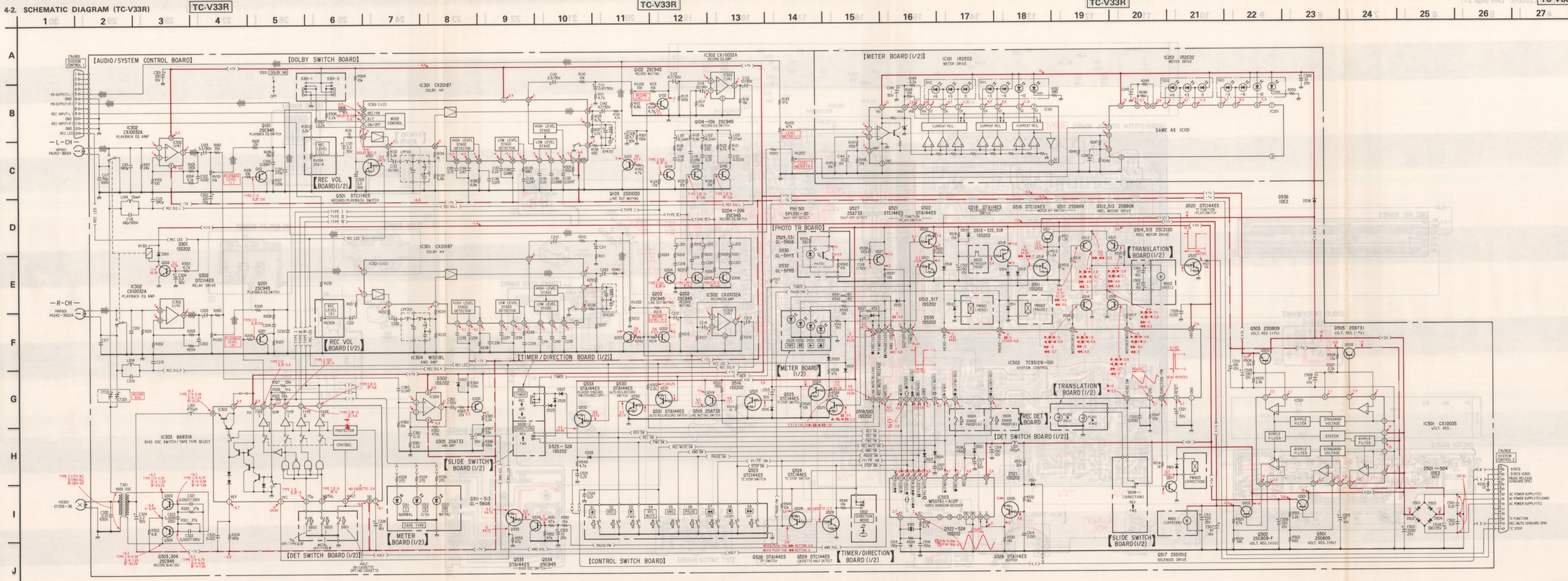

Note:

- All capacitors are in μF unless otherwise noted. pF: μμF 50WV or less are not indicated except for electrolytics and tantalums.
- All resistors are in Ω and ¼W or less unless otherwise specified.
- ▷ : signal path.
- Components for right channel have same values as for left channel. Reference numbers are coded from 200.
- △ : internal component.
- Switch

Ref. No.	Switch	Position
S1	◀ (REV)	OFF
S2	REC	OFF
S3	▶ (FWD)	OFF
S4	REC MUTE	OFF
S5	AMS	OFF
S6	PAUSE	OFF
S7	◀◀ (FR)	OFF
S8	■ (STOP)	OFF
S9	▶▶ (FF)	OFF
S301	DOLBY NR	OFF
S501	TIMER	OFF
S502	DIRECTION MODE	⇄
S601	HALF DET	OFF
S602	70 μ	OFF
S603	METAL	OFF
S604	ERASE PROOF (A)	OFF
S605	POWER	OFF
S606	ERASE PROOF (B)	OFF
S608	DIRECTION	FWD

- ▬▬ : B+ bus.
- ▬▬ : B− bus.
- ▭ : adjustment for repair.
- AC voltage readings in the bias oscillator with a VTVM.
- Voltages are dc with respect to ground unless otherwise noted.
- Readings are taken under no-signal conditions with a VOM (50 kΩ/V).
  no mark : STOP mode
  ( ) : play mode
  (( )) : record mode
  [ ] : Measured with VTVM in record mode.
  ▶ : FWD
  ◀ : REV
  ▶▶ : fast-forward
  ◀◀ : fast-reverse
  ■ : PAUSE
  ●/▶ : REC/FWD
  ●/◀ : REC/REV
- Waveforms are taken to ground in STOP mode by using oscilloscope.
  Voltage variations may be noted due to normal production tolerances.

4-3. MOUNTING DIAGRAM (TC-V55R) ● Semiconductor Lead Layouts. (See page 21)

Note:
- Color code of sleeving over the end of the jacket.

- ○—: parts extracted from the component side.
- ●—: parts extracted from the conductor side.
- : signal path
- : L-CH signal path
- : R-CH signal path
- : B + pattern
- : B − pattern

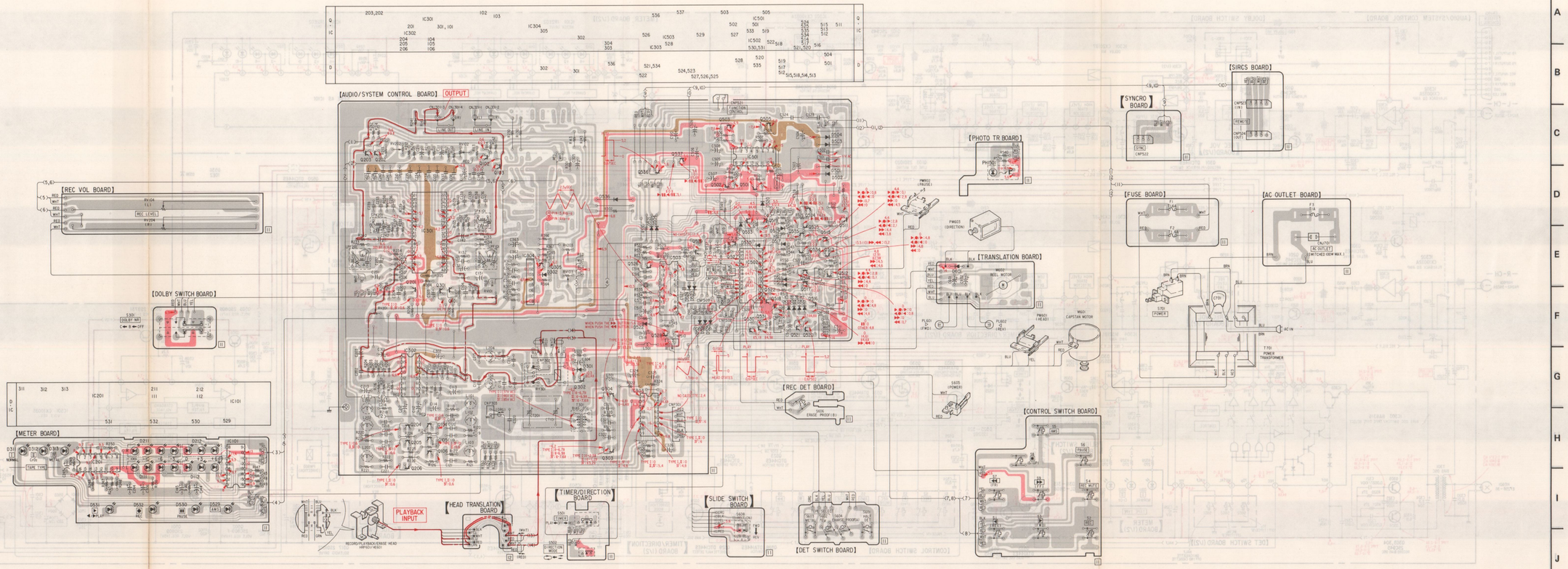

4-4. SCHEMATIC DIAGRAM (TC-V55R)

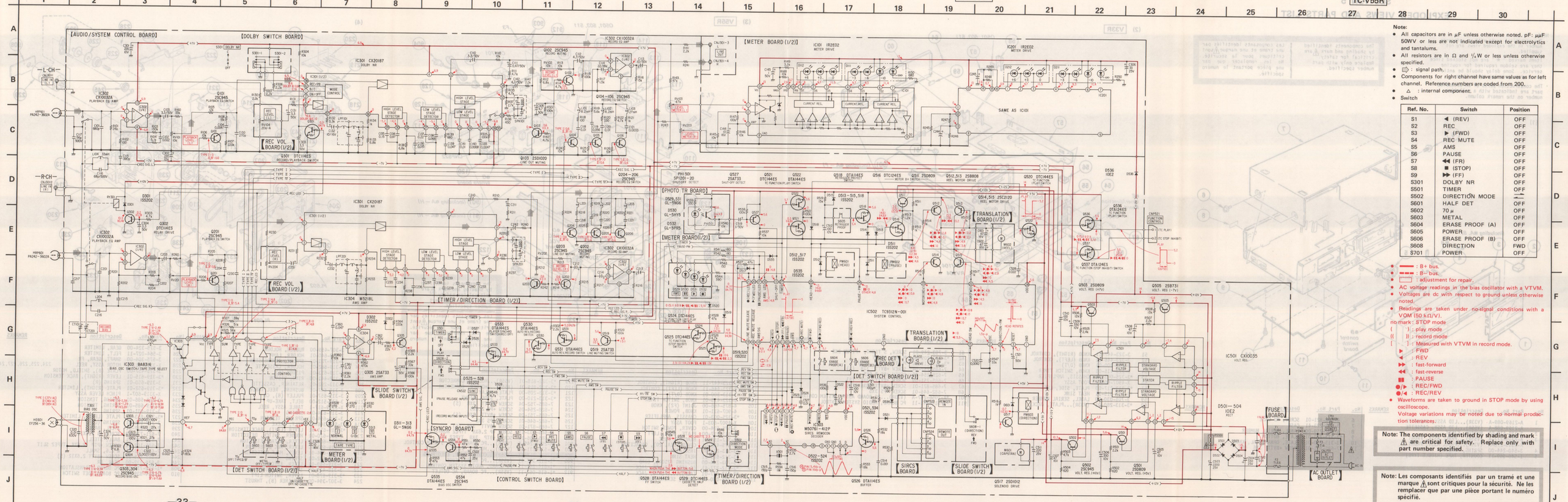

Note:

- All capacitors are in μF unless otherwise noted. pF: $\mu\mu$F 50WV or less are not indicated except for electrolytics and tantalums.
- All resistors are in Ω and 1/4 W or less unless otherwise specified.
- ⇨ : signal path.
- Components for right channel have same values as for left channel. Reference numbers are coded from 200.
- △ : internal component.
- Switch

Ref. No.	Switch	Position
S1	◀ (REV)	OFF
S2	REC	OFF
S3	▶ (FWD)	OFF
S4	REC MUTE	OFF
S5	AMS	OFF
S6	PAUSE	OFF
S7	◀◀ (FR)	OFF
S8	■ (STOP)	OFF
S9	▶▶ (FF)	OFF
S301	DOLBY NR	OFF
S501	TIMER	OFF
S502	DIRECTION MODE	⇄
S601	HALF DET	OFF
S602	70 μ	OFF
S603	METAL	OFF
S604	ERASE PROOF (A)	OFF
S605	POWER	OFF
S606	ERASE PROOF (B)	OFF
S608	DIRECTION	FWD
S701	POWER	OFF

- ━━ : B+ bus.
- ━ ━ ━ : B– bus.
- ▭ : adjustment for repair.
- AC voltage readings in the bias oscillator with a VTVM.
- Voltages are dc with respect to ground unless otherwise noted.
- Readings are taken under no-signal conditions with a VOM (50 kΩ/V).

no mark : STOP mode
( ) : play mode
(( )) : record mode
[ ] : Measured with VTVM in record mode.
▶ : FWD
◀ : REV
▶▶ : fast-forward
◀◀ : fast-reverse
▮▮ : PAUSE
●/▶ : REC/FWD
●/◀ : REC/REV

- Waveforms are taken to ground in STOP mode by using oscilloscope.

Voltage variations may be noted due to normal prodaction tolerances.

Note: The components identified by shading and mark ⚠ are critical for safety. Replace only with part number specified.

Note: Les composants identifiés par un tramé et une marque ⚠ sont critiques pour la sécurité. Ne les remplacer que par une pièce portant le numéro spécifié.

SECTION 5
EXPLODED VIEWS AND PARTS LIST

NOTE:
- The mechanical parts with no reference number in the exploded views are not supplied.
- Items marked " ★ " are not stocked since they are seldom required for routine service. Some delay should be anticipated when ordering these items.
- The construction parts of an assembled part are indicated with a collation number on the remark column.

The components identified by shading and mark ⚠ are critical for safety. Replace only with part number specified.

Les composants identifiés par une trame et une marque ⚠ sont critiques pour la sécurité. Ne les remplacer que par une pièce portant le numéro spécifié.

(1)

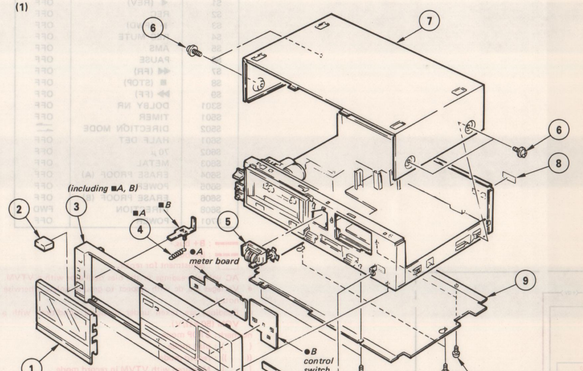

No.	Part No.	Description	REMARKS
1	A-2169-089-A	(V33R)...LID ASSY, CASSETTE	
	A-2169-088-A	(V55R)...LID ASSY, CASSETTE	
2	3-323-410-01	BUTTON, EJECT	
3	A-2310-277-A	(V55R)...PANEL ASSY, FRONT	4
	A-2310-278-A	(V33R)...PANEL ASSY, FRONT	4
4	3-540-244-00	SPRING, TENSION	
5	1-548-589-11	COUNTER, TAPE (MIDDLE TYPE)	
6	4-886-821-01	SCREW, M3 CASE	
7	3-313-223-41	CASE	
8	4-302-759-00	LABEL, SERIAL NUMBER	
9	*3-313-293-01	PLATE, BOTTOM	
10	3-313-290-01	PLATE, ORNAMENTAL, KNOB	
11	7-685-871-01	SCREW +BVTT 3X6 (S)	

(2) V33R

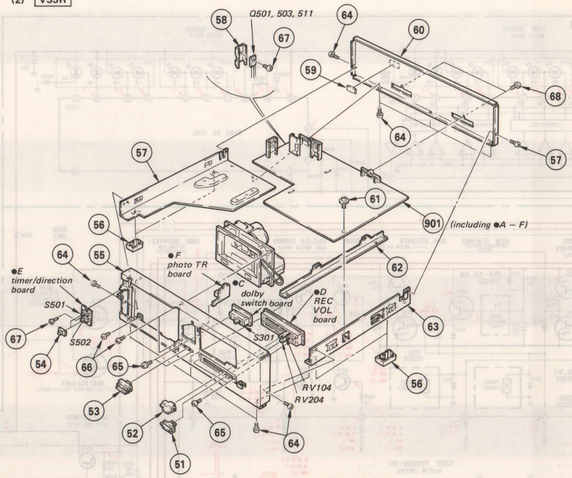

No.	Part No.	Description	REMARKS
51	3-323-447-11	KNOB (RIGHT), CONTROL	
52	3-323-446-11	KNOB (LEFT), CONTROL	
53	3-313-300-01	KNOB (D/T)	
54	3-323-415-01	KNOB, SWITCH TIMER	
55	*3-325-003-01	CHASSIS, AMPLIFIER	
56	X-4907-603-1	FOOT ASSY	
57	*3-313-217-00	PLATE, SIDE, LEFT	
58	*3-312-615-31	HEAT SINK	
59	3-701-030-00	LABEL, SERIAL NUMBER	
60	*3-313-280-01	(V33R)...PLATE, JACK	
61	3-703-249-01	SCREW, S TIGHT, +PTTWH 3X6	
62	*3-313-209-00	PLATE, RELAY	
63	*3-313-210-00	PLATE, SIDE, RIGHT	
64	7-685-752-04	SCREW +BVTT 3X8 (S)	
65	7-628-254-05	SCREW +PS 2.6X5	
66	7-685-751-09	SCREW +BVTT 3X6 (S)	
67	7-685-871-01	SCREW +BVTT 3X6 (S)	
68	7-682-646-01	SCREW +PS 3X5	
901	*A-2056-247-A	(V33R)...PC BOARD ASSY, SYSTEM CONTROL	
911	*1-614-841-11	PC BOARD, AUDIO SYSTEM CONTROL	

(3) V55R

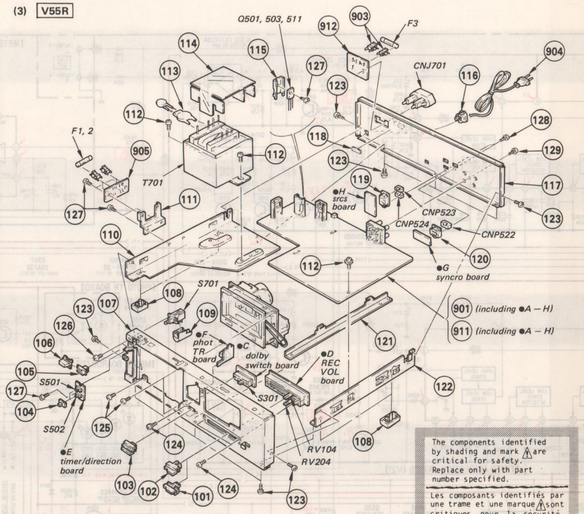

The components identified by shading and mark ⚠ are critical for safety. Replace only with part number specified.

Les composants identifiés par une trame et une marque ⚠ sont critiques pour la sécurité. Ne les remplacer que par une pièce portant le numéro spécifié.

No.	Part No.	Description	REMARKS
101	3-323-447-11	KNOB (RIGHT), CONTROL	
102	3-323-446-11	KNOB (LEFT), CONTROL	
103	3-313-300-01	KNOB (D/T)	
104	3-323-415-01	KNOB, SWITCH TIMER	
105	4-875-466-00	JOINT (F2), KNOB	
106	4-907-611-01	KNOB, POWER	
107	*3-325-003-01	CHASSIS, AMPLIFIER	
108	X-4907-603-1	FOOT ASSY	
109	3-575-524-00	COVER, POWER SWITCH	
110	*3-313-217-00	PLATE, SIDE, LEFT	
111	*3-317-156-01	BRACKET, FUSE	
113	4-875-455-01	COVER (DIA. 20), CAPACITOR	
114	*3-313-276-01	INSULATOR	
115	*3-312-615-31	HEAT SINK	
116	3-703-244-00	BUSHING (2104), CORD	
117	*3-312-277-41	(G-AEP)...PLATE, JACK	
	*3-313-277-01	(AEP)....PLATE, JACK	
118	3-701-030-00	LABEL, SERIAL NUMBER	
119	*3-322-818-01	(V55R)...HOLDER, CONNECTOR	
120	*3-322-819-01	(V55R)...HOLDER, CONNECTOR	
121	*3-313-209-00	PLATE, RELAY	
122	*3-313-210-00	PLATE, SIDE, RIGHT	
123	7-685-752-04	SCREW +BVTT 3X8 (S)	
124	7-628-254-05	SCREW +PS 2.6X5	
125	7-685-751-09	SCREW +BVTT 3X6 (S)	
126	7-682-646-01	SCREW +PS 3X5	
127	7-685-871-01	SCREW +BVTT 3X6 (S)	
128	7-685-133-19	SCREW +P 2.6X6 TYPE2 NON-SLIT	
129	7-685-146-19	SCREW +BTP 3X8 TYPE2 N-S	
901	*A-2056-245-A	(V55R)...PC BOARD ASSY, SYSTEM CONTROL	
903	*1-533-131-00	(V55R)...HOLDER, FUSE	
904	A-1534-817-A	(V55R)...CORD, POWER, EULO PLUG	
905	*1-612-397-41	(V55R)...PC BOARD, FUSE	
911	*1-614-841-11	PC BOARD, AUDIO SYSTEM CONTROL	
912	*1-615-062-11	(V55R)...PC BOARD, AC OUTLET	

(4)

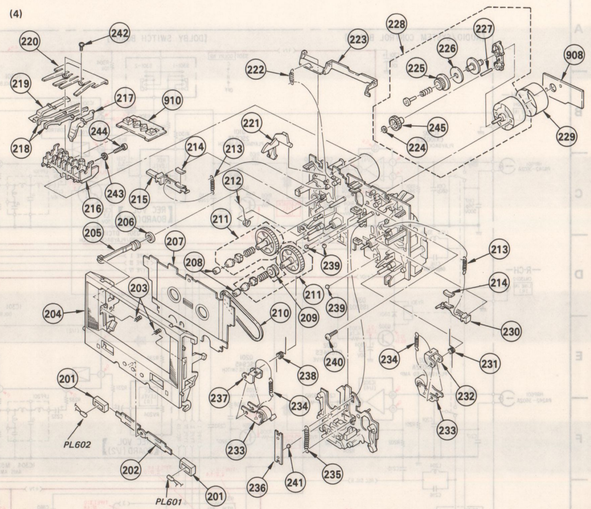

No.	Part No.	Description	REMARKS
201	3-307-459-00	RUBBER, HOLDER	
202	3-319-640-01	HOLDER, LAMP	
203	3-319-721-01	SPRING, COMPRESSION	
204	3-319-682-01	HOLDER, CASSETTE	
205	3-319-613-01	PISTON (B)	
206	3-312-441-00	RING, PISTON	
207	3-313-292-01	RETAINER, CASSETTE	
208	3-319-607-01	BUSHING, REEL TABLE	
209	3-319-657-01	PULLEY (B), CB	
210	3-578-512-00	BELT, TAKE-UP	
211	X-3319-617-1	TABLE ASSY, REEL	
212	3-319-614-01	SPRING	
213	3-319-684-01	SPRING, TENSION	
214	3-575-346-01	FELT, BREKE	
215	*3-319-611-01	LEVER (LEFT), BACK TENSION	
216	3-319-670-01	HOLDER, SWITCH, DETECTION	
217	3-319-605-01	LEVER, METAL DETECTION	
218	3-319-603-01	LEVER, REC DETECTION	
219	3-319-604-01	LEVER, HALF DETECTION	
220	3-319-602-01	SPRING	
221	3-319-669-01	LEVER, EJECT	
222	3-312-432-00	SPRING, TENSION	
223	*3-319-678-01	LEVER, SWITCH LIFT	
224	3-307-394-00	RETAINER (B), THRUST	
225	3-575-324-00	GEAR, LIMITER	
226	3-564-027-11	FELT, LIMITER	
227	3-575-304-00	SHAFT, GEAR, FR	
228	*X-3319-612-1	MOTOR ASSY, REEL	224,225,226,227,245
229	3-575-457-00	PLATE (B), SHIELD, MOTOR	
230	*3-319-615-01	LEVER (RIGHT), BACK TENSION	
231	3-319-650-01	SPRING (R)	
232	*3-319-652-01	PLATE (RIGHT), LIMITER	
233	X-3319-607-1	PINCH LEVER ASSY	
234	3-319-686-01	SPRING, TENSION	
235	3-319-685-01	SPRING, TENSION	
236	3-319-601-01	SPRING	
237	*3-319-653-01	PLATE (LEFT), LIMITER	
238	3-319-651-01	SPRING (L)	
239	7-671-112-01	STEEL, BALL	
240	7-621-775-60	SCREW +B 2.6X12	
241	7-671-112-11	BALL, STEEL	
242	7-685-102-21	SCREW +PTP 2.6X4 TYPE2 SLIT	
243	7-688-002-01	W 2.6, SMALL	
244	7-685-865-01	SCREW +BVTT 2.6X12 (S)	
245	3-575-332-00	GEAR, FR	
908	*1-612-730-11	PC BOARD, TRANSLATION	
910	*1-614-839-11	PC BOARD, DET SWITCH	

(5)

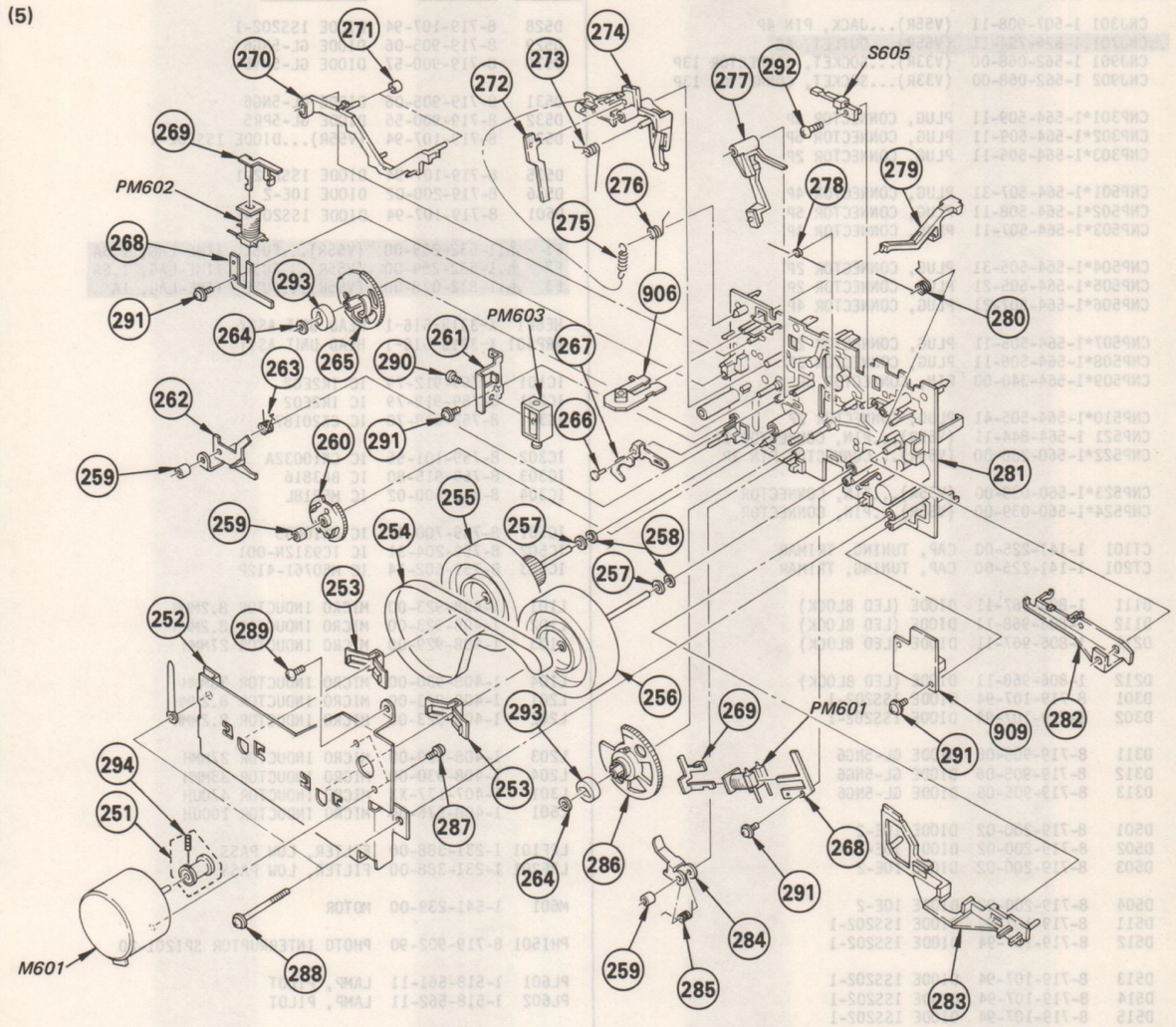

No.	Part No.	Description	REMARKS
251	X-3319-617-1	PULLEY ASSY, MOTOR	294
252	*3-319-665-01	RETAINER, THRUST	
253	3-319-608-01	RETAINER, THRUST	
254	3-319-630-01	BELT (R), CAPSTAN	
255	X-3319-606-1	FLYWHEEL (T) ASSY	
256	X-3319-601-1	FLYWHEEL ASSY	
257	3-701-438-11	WASHER, 2.5	
258	3-307-482-00	WASHER, LUMILER	
259	3-319-607-01	BUSHING, REEL TABLE	
260	3-319-674-01	GEAR, REVERSE CAM	
261	*3-319-639-01	BRACKET, TRIGGER PM	
262	*3-319-628-01	LEVER, REVERSE TRIGGER	
263	3-319-648-01	SPRING	
264	3-307-394-00	RETAINER (B), THRUST	
265	3-319-688-01	GEAR, PAUSE CAM	
266	*3-319-664-01	SHAFT, CONTROL LEVER	
267	*3-319-683-01	LEVER, CONTROL, TRIGGER	
268	3-307-332-00	ARBOR, FIXED	
269	3-307-333-00	ARBOR, TRIGGER	
270	*3-319-668-01	PLATE, BRAKE	
271	3-319-662-01	RUBBER, BRAKE	
272	3-319-612-01	SPRING	
273	3-319-606-01	SPRING	

No.	Part No.	Description	REMARKS
274	*X-3319-614-1	LEVER ASSY, PAUSE	
275	3-555-124-00	SPRING, TENSION	
276	3-319-637-01	SPRING (R)	
277	*X-3319-615-1	LEVER ASSY, FWD LOCK	
278	3-319-649-01	SPRING	
279	3-319-666-01	LEVER (RIGHT), REC DETECTION	
280	3-319-633-01	SPRING	
281	X-3319-611-1	CHASSIS ASSY, MECHANICAL	
282	*3-319-676-01	LEVER, FWD	
283	*3-319-681-01	SLIDER, REVERSE	
284	*3-319-658-01	LEVER, TRIGGER KICK	
285	3-319-660-01	SPRING	
286	3-319-689-01	GEAR, FWD CAM	
287	7-628-253-95	SCREW +PS 2.6X4	
288	7-685-879-01	SCREW +BVTT 3X30 (S)	
289	7-685-646-21	SCREW +BVTP 3X8 (S)	
290	7-685-850-01	SCREW +BVTT 2X3 (S)	
291	7-687-204-11	TOTSU PTPWH 2X6 NON-SLIT, TYPE2	
292	7-685-792-01	SCREW +PTT 2.6X5	
293	1-452-202-00	MAGNET	
294	7-621-733-08	SET-SCT, HEX 2X4 FLAT POINT	
906	*1-612-727-11	PC BOARD, REC DET	
909	*1-614-396-11	PC BOARD, SLIDE SW	

(6)

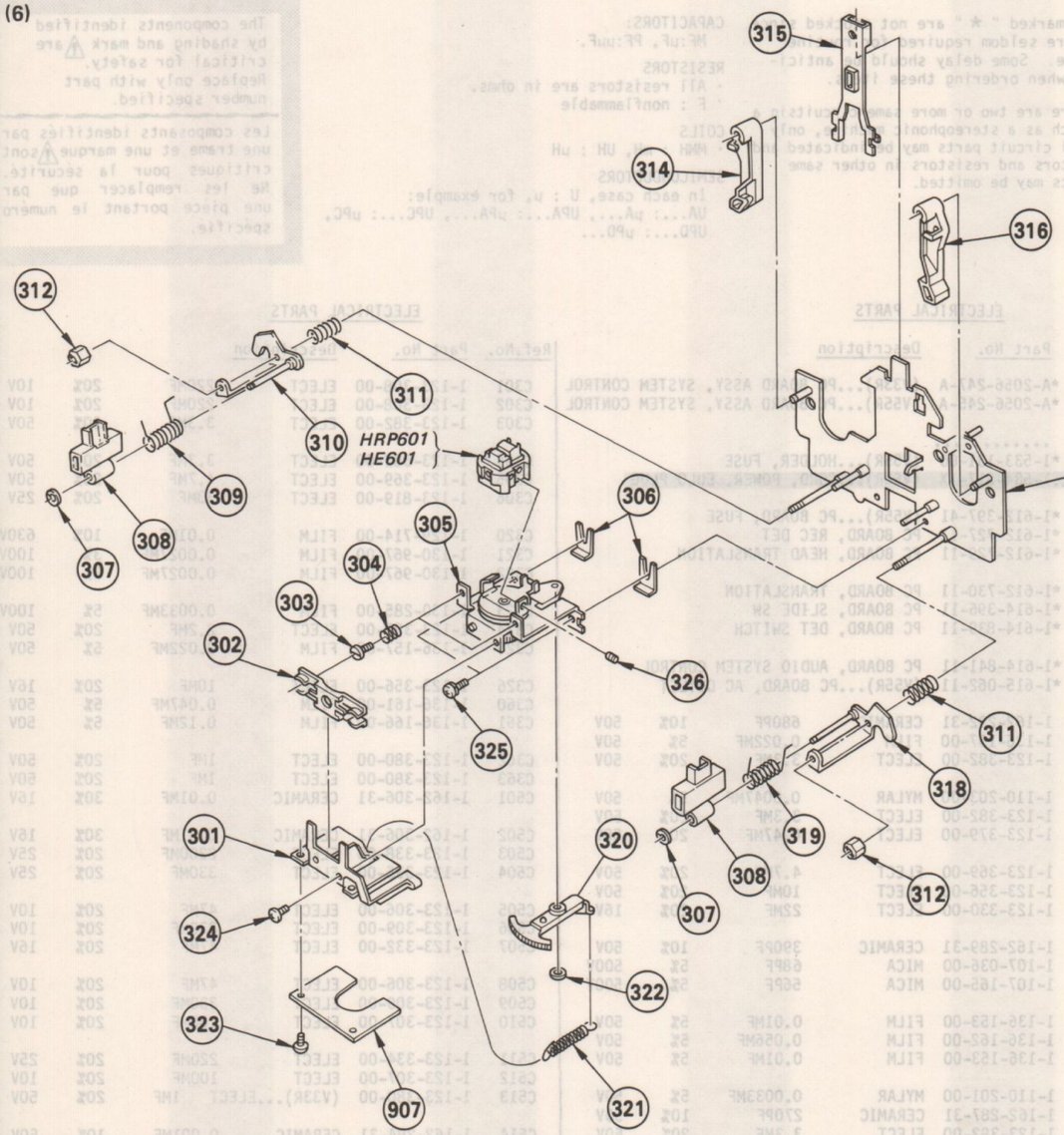

No.	Part No.	Description	REMARKS
301	3-319-620-01	PLATE, ORNAMENTAL, HEAD	
302	3-319-644-01	STOPPER	
303	3-319-663-01	SCREW, ADJUSTMENT, AZIMUTH	
304	3-307-460-00	SPRING, COMPRESSION	
305	X-3319-613-1	BRACKET COMPLETE ASSY, HEAD	
306	3-307-477-01	SEAM (A), HEAD ADJUSTMENT	
	3-307-477-11	SEAM (A), HEAD ADJUSTMENT	
	3-307-477-21	SEAM (A), HEAD ADJUSTMENT	
	3-307-477-31	SEAM (A), HEAD ADJUSTMENT	
	3-307-477-41	SEAM (A), HEAD ADJUSTMENT	
307	3-307-394-00	RETAINER (B), THRUST	
308	3-306-269-01	GUIDE, TAPE	
309	3-306-249-00	SPRING (LEFT)	
310	*X-3319-609-1	LEVER (LEFT) ASSY, GUIDE	
311	3-537-215-00	SPRING, COMPRESSION	

No.	Part No.	Description	REMARKS
312	3-319-638-01	NUT, ADJUSTMENT	
314	3-319-643-01	LEVER (L), P ROLLER SELECTION	
315	3-319-684-01	PROTECTOR, EDGE	
316	3-319-642-01	LEVER (R), P ROLLER SELECTION	
317	*X-3319-610-1	CHASSIS ASSY, REVERSE HEAD	
318	*X-3319-608-1	LEVER (RIGHT) ASSY, GUIDE	
319	3-306-250-00	SPRING (RIGHT)	
320	3-319-625-01	GEAR, ROTARY HEAD	
321	3-306-258-01	SPRING, TENSION	
322	7-624-102-04	STOP RING 1.5	
323	7-685-850-01	SCREW +BVTT 2X3 (S)	
324	7-627-553-17	SCREW, PRECISION +P 2X2	
325	7-628-253-05	SCREW +PS 2X4	
326	7-621-710-26	SET-SCREW, SLOT 2X3 FLAT POINT	
907	*1-612-729-11	PC BOARD, HEAD TRANSLATION	

NOTE:
- Items marked " ★ " are not stocked since they are seldom required for routine service. Some delay should be anticipated when ordering these items.
- If there are two or more same circuitsin a set such as a stereophonic machine, only typical circuit parts may be indicated and capacitors and resistors in other same circuits may be omitted.

CAPACITORS:
MF:μF, PF:μμF.

RESISTORS
- All resistors are in ohms.
- F : nonflammable

COILS
- MMH : mH, UH : μH

SEMICONDUCTORS
In each case, U : μ, for example:
UA...: μA..., UPA...: μPA..., UPC...: μPC, UPD...: μPD...

The components identified by shading and mark ⚠ are critical for safety. Replace only with part number specified.

Les composants identifiés par une trame et une marque ⚠ sont critiques pour la sécurité. Ne les remplacer que par une pièce portant le numéro spécifié.

ELECTRICAL PARTS

Ref.No.	Part No.	Description
901	*A-2056-247-A	(V33R)...PC BOARD ASSY, SYSTEM CONTROL
901	*A-2056-245-A	(V55R)...PC BOARD ASSY, SYSTEM CONTROL
902	.....	
903	*1-533-131-00	(V55R)...HOLDER, FUSE
904	⚠.1-534-817-XX	(V55R)...CORD, POWER, EULO PLUG
905	*1-612-397-41	(V55R)...PC BOARD, FUSE
906	*1-612-727-11	PC BOARD, REC DET
907	*1-612-729-11	PC BOARD, HEAD TRANSLATION
908	*1-612-730-11	PC BOARD, TRANSLATION
909	*1-614-396-11	PC BOARD, SLIDE SW
910	*1-614-839-11	PC BOARD, DET SWITCH
911	*1-614-841-11	PC BOARD, AUDIO SYSTEM CONTROL
912	*1-615-062-11	(V55R)...PC BOARD, AC OUTLET
C101	1-162-292-31	CERAMIC 680PF 10% 50V
C102	1-136-157-00	FILM 0.022MF 5% 50V
C103	1-123-382-00	ELECT 3.3MF 20% 50V
C104	1-110-203-00	MYLAR 0.0047MF 5% 50V
C110	1-123-382-00	ELECT 3.3MF 20% 50V
C111	1-123-379-00	ELECT 0.47MF 20% 50V
C112	1-123-369-00	ELECT 4.7MF 20% 50V
C113	1-123-356-00	ELECT 10MF 20% 50V
C114	1-123-330-00	ELECT 22MF 20% 16V
C115	1-162-289-31	CERAMIC 390PF 10% 50V
C116	1-107-036-00	MICA 68PF 5% 500V
C117	1-107-165-00	MICA 56PF 5% 500V
C118	1-136-153-00	FILM 0.01MF 5% 50V
C119	1-136-162-00	FILM 0.056MF 5% 50V
C120	1-136-153-00	FILM 0.01MF 5% 50V
C121	1-110-201-00	MYLAR 0.0033MF 5% 50V
C130	1-162-287-31	CERAMIC 270PF 10% 50V
C131	1-123-382-00	ELECT 3.3MF 20% 50V
C132	1-123-356-00	ELECT 10MF 20% 16V
C133	1-110-203-00	MYLAR 0.0047MF 5% 50V
C134	1-136-173-00	FILM 0.47MF 5% 50V
C135	1-136-167-00	FILM 0.15MF 5% 50V
C136	1-136-155-00	FILM 0.015MF 5% 50V
C137	1-136-169-00	FILM 0.22MF 5% 50V
C138	1-136-163-00	FILM 0.068MF 5% 50V
C139	1-136-161-00	FILM 0.047MF 5% 50V
C140	1-110-205-00	MYLAR 0.0068MF 5% 50V
C141	1-136-153-00	FILM 0.01MF 5% 50V
C142	1-123-369-00	ELECT 4.7MF 20% 50V
C144	1-123-617-00	ELECT 10MF 20% 16V
C145	1-123-611-00	ELECT 1MF 20% 50V

ELECTRICAL PARTS

Ref.No.	Part No.	Description
C301	1-123-308-00	ELECT 220MF 20% 10V
C302	1-123-308-00	ELECT 220MF 20% 10V
C303	1-123-382-00	ELECT 3.3MF 20% 50V
C304	1-123-382-00	ELECT 3.3MF 20% 50V
C305	1-123-369-00	ELECT 4.7MF 20% 50V
C306	1-123-819-00	ELECT 33MF 20% 25V
C320	1-129-714-00	FILM 0.01MF 10% 630V
C321	1-130-967-00	FILM 0.0027MF 3% 100V
C322	1-130-967-00	FILM 0.0027MF 3% 100V
C323	1-130-285-00	FILM 0.0033MF 5% 100V
C324	1-123-381-00	ELECT 2.2MF 20% 50V
C325	1-136-157-00	FILM 0.022MF 5% 50V
C326	1-123-356-00	ELECT 10MF 20% 16V
C360	1-136-161-00	FILM 0.047MF 5% 50V
C361	1-136-166-00	FILM 0.12MF 5% 50V
C362	1-123-380-00	ELECT 1MF 20% 50V
C363	1-123-380-00	ELECT 1MF 20% 50V
C501	1-162-306-31	CERAMIC 0.01MF 30% 16V
C502	1-162-306-31	CERAMIC 0.01MF 30% 16V
C503	1-123-338-00	ELECT 2200MF 20% 25V
C504	1-123-335-00	ELECT 330MF 20% 25V
C505	1-123-306-00	ELECT 47MF 20% 10V
C506	1-123-309-00	ELECT 330MF 20% 10V
C507	1-123-332-00	ELECT 47MF 20% 16V
C508	1-123-306-00	ELECT 47MF 20% 10V
C509	1-123-309-00	ELECT 330MF 20% 10V
C510	1-123-307-00	ELECT 100MF 20% 10V
C511	1-123-334-00	ELECT 220MF 20% 25V
C512	1-123-307-00	ELECT 100MF 20% 10V
C513	1-123-380-00	(V33R)...ELECT 1MF 20% 50V
C514	1-162-294-31	CERAMIC 0.001MF 10% 50V
C515	1-162-284-31	CERAMIC 150PF 10% 50V
C516	1-162-284-31	CERAMIC 150PF 10% 50V
C517	1-123-381-00	ELECT 2.2MF 20% 50V
C518	1-123-307-00	ELECT 100MF 20% 10V
C519	1-123-380-00	ELECT 1MF 20% 50V
C520	1-110-206-00	MYLAR 0.0082MF 5% 50V
C521	1-123-380-00	ELECT 1MF 20% 50V
C522	1-123-356-00	ELECT 10MF 20% 25V
C523	1-162-306-31	CERAMIC 0.01MF 30% 16V
C524	1-162-306-31	CERAMIC 0.01MF 30% 16V
C527	1-162-306-31	CERAMIC 0.01MF 30% 16V
C528	1-161-494-00	CERAMIC 0.022MF 30% 25V
C601	1-123-332-00	ELECT 47MF 20% 16V
C602	1-123-332-00	ELECT 47MF 20% 16V
C701	⚠.1-161-744-00	(V55R)...CERAMIC 10000PF 400V

ELECTRICAL PARTS

Ref.No.	Part No.	Description
CNJ301	1-507-908-11	(V55R)...JACK, PIN 4P
⚠CNJ701	.1-526-794-11	(V55R)...OUTLET, AC
CNJ901	1-562-068-00	(V33R)...SOCKET, CONNECTOR 13P
CNJ902	1-562-068-00	(V33R)...SOCKET, CONNECTOR 13P
CNP301	*1-564-509-11	PLUG, CONNECTOR 6P
CNP302	*1-564-509-11	PLUG, CONNECTOR 6P
CNP303	*1-564-505-11	PLUG, CONNECTOR 2P
CNP501	*1-564-507-31	PLUG, CONNECTOR 4P
CNP502	*1-564-508-11	PLUG, CONNECTOR 5P
CNP503	*1-564-507-11	PLUG, CONNECTOR 4P
CNP504	*1-564-505-31	PLUG, CONNECTOR 2P
CNP505	*1-564-505-21	PLUG, CONNECTOR 2P
CNP506	*1-564-507-21	PLUG, CONNECTOR 4P
CNP507	*1-564-505-11	PLUG, CONNECTOR 2P
CNP508	*1-564-506-11	PLUG, CONNECTOR 3P
CNP509	*1-564-340-00	PIN, CONNECTOR 6P
CNP510	*1-564-505-41	PLUG, CONNECTOR 2P
CNP521	1-564-844-11	(V55R)...PIN, CONNECTOR 2P
CNP522	*1-560-280-00	(V55R)...CONNECTOR PIN 3P
CNP523	*1-560-039-00	(V55R)...PIN, CONNECTOR
CNP524	*1-560-039-00	(V55R)...PIN, CONNECTOR
CT101	1-141-225-00	CAP, TUNING, TRIMAR
CT201	1-141-225-00	CAP, TUNING, TRIMAR
D111	1-806-967-11	DIODE (LED BLOCK)
D112	1-806-968-11	DIODE (LED BLOCK)
D211	1-806-967-11	DIODE (LED BLOCK)
D212	1-806-968-11	DIODE (LED BLOCK)
D301	8-719-107-94	DIODE 1SS202-1
D302	8-719-107-94	DIODE 1SS202-1
D311	8-719-905-06	DIODE GL-5NG6
D312	8-719-905-06	DIODE GL-5NG6
D313	8-719-905-06	DIODE GL-5NG6
D501	8-719-200-02	DIODE 10E-2
D502	8-719-200-02	DIODE 10E-2
D503	8-719-200-02	DIODE 10E-2
D504	8-719-200-02	DIODE 10E-2
D511	8-719-107-94	DIODE 1SS202-1
D512	8-719-107-94	DIODE 1SS202-1
D513	8-719-107-94	DIODE 1SS202-1
D514	8-719-107-94	DIODE 1SS202-1
D515	8-719-107-94	DIODE 1SS202-1
D516	8-719-107-94	(V33R)...DIODE 1SS202-1
D517	8-719-107-94	DIODE 1SS202-1
D518	8-719-107-94	DIODE 1SS202-1
D519	8-719-107-94	DIODE 1SS202-1
D520	8-719-107-94	DIODE 1SS202-1
D521	8-719-107-94	DIODE 1SS202-1
D522	8-719-107-94	DIODE 1SS202-1
D523	8-719-107-94	DIODE 1SS202-1
D524	8-719-107-94	DIODE 1SS202-1
D525	8-719-107-94	DIODE 1SS202-1
D526	8-719-107-94	DIODE 1SS202-1
D527	8-719-107-94	DIODE 1SS202-1

The components identified by shading and mark ⚠ are critical for safety. Replace only with part number specified.

Les composants identifiés par une trame et une marque ⚠ sont critiques pour la sécurité. Ne les remplacer que par une pièce portant le numéro spécifié.

ELECTRICAL PARTS

Ref.No.	Part No.	Description
D528	8-719-107-94	DIODE 1SS202-1
D529	8-719-905-06	DIODE GL-5NG6
D530	8-719-900-57	DIODE GL-5HY5
D531	8-719-905-06	DIODE GL-5NG6
D532	8-719-900-56	DIODE GL-5PR5
D534	8-719-107-94	(V55R)...DIODE 1SS202-1
D535	8-719-107-94	DIODE 1SS202-1
D536	8-719-200-02	DIODE 10E-2
D601	8-719-107-94	DIODE 1SS202-1
F1	⚠.1-532-259-00	(V55R)...FUSE, TIME-LAG, 1.6A
F2	⚠.1-532-259-00	(V55R)...FUSE, TIME-LAG, 1.6A
F3	⚠.1-532-078-00	(V55R)...FUSE, TIME-LAG, 1A
HE601	X-3319-616-1	HEAD UNIT ASSY
HRP601	X-3319-616-1	HEAD UNIT ASSY
IC101	8-759-912-79	IC IR2E02
IC201	8-759-912-79	IC IR2E02
IC301	8-752-018-70	IC CX20187
IC302	8-759-101-55	IC CX10032A
IC303	8-759-915-80	IC BA3816
IC304	8-759-600-02	IC M5218L
IC501	8-759-700-47	IC CX10035
IC502	8-759-204-31	IC TC9312N-001
IC503	8-759-602-14	IC M50761-412P
L101	1-408-923-00	MICRO INDUCTOR 8.2MMH
L102	1-408-923-00	MICRO INDUCTOR 8.2MMH
L103	1-408-929-00	MICRO INDUCTOR 27MMH
L104	1-408-930-00	MICRO INDUCTOR 33MMH
L201	1-408-923-00	MICRO INDUCTOR 8.2MMH
L202	1-408-923-00	MICRO INDUCTOR 8.2MMH
L203	1-408-929-00	MICRO INDUCTOR 27MMH
L204	1-408-930-00	MICRO INDUCTOR 33MMH
L301	1-407-177-XX	MICRO INDUCTOR 470UH
L501	1-408-575-00	MICRO INDUCTOR 100UH
LPF101	1-231-388-00	FILTER, LOW PASS
LPF201	1-231-388-00	FILTER, LOW PASS
M601	1-541-239-00	MOTOR
PHI501	8-719-902-90	PHOTO INTERRUPTOR SPI201-20
PL601	1-518-561-11	LAMP, PILOT
PL602	1-518-562-11	LAMP, PILOT
PM601	1-454-316-00	SOLENOID, PLUNGER
PM602	1-454-316-00	SOLENOID, PLUNGER
PM603	1-454-374-11	SOLENOID, PLUNGER
PS501	⚠.1-532-637-00	(V55R)....LINK, IC
Q101	8-729-194-57	TRANSISTOR 2SC945-P
Q102	8-729-194-57	TRANSISTOR 2SC945-P
Q103	8-729-101-13	TRANSISTOR 2SC2001
Q104	8-729-194-57	TRANSISTOR 2SC945-P
Q105	8-729-194-57	TRANSISTOR 2SC945-P
Q106	8-729-194-57	TRANSISTOR 2SC945-P
Q201	8-729-194-57	TRANSISTOR 2SC945-P
Q202	8-729-194-57	TRANSISTOR 2SC945-P
Q203	8-729-101-13	TRANSISTOR 2SC2001
Q204	8-729-194-57	TRANSISTOR 2SC945-P
Q205	8-729-194-57	TRANSISTOR 2SC945-P
Q206	8-729-194-57	TRANSISTOR 2SC945-P
Q301	8-729-900-80	TRANSISTOR DTC114ES
Q302	8-729-900-80	TRANSISTOR DTC114ES
Q303	8-729-194-57	TRANSISTOR 2SC945-P

ELECTRICAL PARTS

Ref.No.	Part No.	Description
Q304	8-729-194-57	TRANSISTOR 2SC945-P
Q305	8-729-204-83	TRANSISTOR 2SA1048-GR
Q501	8-729-180-93	TRANSISTOR 2SD809
Q502	8-729-194-57	(V33R)...TRANSISTOR 2SC945-P
Q502	8-729-178-54	(V55R)...TRANSISTOR 2SC2785
Q503	8-729-180-93	TRANSISTOR 2SD809
Q505	8-729-173-13	TRANSISTOR 2SB731
Q511	8-729-180-93	TRANSISTOR 2SD809
Q512	8-729-800-83	TRANSISTOR 2SB808
Q513	8-729-800-83	TRANSISTOR 2SB808
Q514	8-729-100-13	TRANSISTOR 2SC2001
Q515	8-729-100-13	TRANSISTOR 2SC2001
Q516	8-729-900-36	TRANSISTOR DTC124ES
Q517	8-729-102-03	TRANSISTOR 2SD1020
Q518	8-729-900-61	TRANSISTOR DTA114ES
Q519	8-729-204-83	TRANSISTOR 2SA1048-GR
Q520	8-729-900-89	TRANSISTOR DTC144ES
Q521	8-729-900-89	TRANSISTOR DTC144ES
Q522	8-729-900-65	TRANSISTOR DTA144ES
Q523	8-729-900-89	(V33R)...TRANSISTOR DTC144ES
Q524	8-729-900-89	TRANSISTOR DTC144ES
Q525	8-729-900-89	TRANSISTOR DTC144ES
Q526	8-729-900-65	TRANSISTOR DTA114ES
Q527	8-729-204-83	TRANSISTOR 2SA1048-GR
Q528	8-729-900-65	TRANSISTOR DTA144ES
Q529	8-729-900-89	TRANSISTOR DTC144ES
Q530	8-729-900-89	TRANSISTOR DTC144ES
Q531	8-729-900-89	TRANSISTOR DTA144ES
Q533	8-729-900-65	TRANSISTOR DTA144ES
Q534	8-729-194-57	TRANSISTOR 2SC945-P
Q535	8-729-900-65	TRANSISTOR DTA144ES
Q536	8-729-900-63	(V55R)...TRANSISTOR DTA124ES
Q537	8-729-900-63	(V55R)...TRANSISTOR DTA124ES
R101	1-247-864-00	CARBON 24K 5% 1/6W
R102	1-247-807-00	CARBON 100 5% 1/6W
R103	1-247-882-00	CARBON 130K 5% 1/6W
R104	1-247-848-00	CARBON 5.1K 5% 1/6W
R105	1-247-857-00	CARBON 12K 5% 1/6W
R106	1-247-855-00	CARBON 10K 5% 1/6W
R107	1-247-887-00	CARBON 220K 5% 1/6W
R108	1-247-861-00	CARBON 18K 5% 1/6W
R110	1-247-855-00	CARBON 10K 5% 1/6W
R111	1-247-847-00	CARBON 4.7K 5% 1/6W
R112	1-247-851-00	CARBON 6.8K 5% 1/6W
R113	1-247-855-00	CARBON 10K 5% 1/6W
R114	1-247-847-00	CARBON 4.7K 5% 1/6W
R115	1-247-879-00	CARBON 100K 5% 1/6W
R116	1-247-859-00	CARBON 15K 5% 1/6W
R117	1-247-835-00	CARBON 1.5K 5% 1/6W
R118	1-247-807-00	CARBON 100 5% 1/6W
R119	1-247-849-00	CARBON 5.6K 5% 1/6W
R120	1-247-819-00	CARBON 330 5% 1/6W
R121	1-247-831-00	CARBON 1K 5% 1/6W
R122	1-247-847-00	CARBON 4.7K 5% 1/6W

ELECTRICAL PARTS

Ref.No.	Part No.	Description
R124	1-247-855-00	CARBON 10K 5% 1/6W
R125	1-247-855-00	CARBON 10K 5% 1/6W
R126	1-247-855-00	CARBON 10K 5% 1/6W
R130	1-247-863-00	CARBON 22K 5% 1/6W
R131	1-247-831-00	CARBON 1K 5% 1/6W
R132	1-247-843-00	CARBON 3.3K 5% 1/6W
R133	1-247-851-00	CARBON 6.8K 5% 1/6W
R134	1-247-831-00	CARBON 1K 5% 1/6W
R135	1-247-847-00	CARBON 4.7K 5% 1/6W
R136	1-247-822-00	CARBON 430 5% 1/6W
R137	1-247-841-00	CARBON 2.7K 5% 1/6W
R138	1-247-851-00	CARBON 6.8K 5% 1/6W
R139	1-247-827-00	CARBON 680 5% 1/6W
R140	1-247-839-00	(V55R)...CARBON 2.2K 5% 1/6W
R140	1-247-847-00	(V33R)...CARBON 4.7K 5% 1/6W
R141	1-247-839-00	(V55R)...CARBON 2.2K 5% 1/6W
R142	1-247-847-00	CARBON 4.7K 5% 1/6W
R143	1-247-871-00	CARBON 47K 5% 1/6W
R145	1-247-855-00	CARBON 10K 5% 1/6W
R146	1-247-855-00	CARBON 10K 5% 1/6W
R147	1-247-879-00	CARBON 100K 5% 1/6W
R148	1-247-855-00	CARBON 10K 5% 1/6W
R149	1-247-843-00	CARBON 3.3K 5% 1/6W
R150	1-247-827-00	CARBON 680 5% 1/6W
R160	1-247-867-00	CARBON 33K 5% 1/6W
R301	1-247-879-00	CARBON 100K 5% 1/6W
R302	1-247-839-00	CARBON 2.2K 5% 1/6W
R303	1-247-847-00	CARBON 4.7K 5% 1/6W
R304	1-247-855-00	CARBON 10K 5% 1/6W
R305	1-247-879-00	CARBON 100K 5% 1/6W
R306	1-247-839-00	CARBON 2.2K 5% 1/6W
R307	1-247-839-00	CARBON 2.2K 5% 1/6W
R320	1-247-865-00	CARBON 27K 5% 1/6W
R321	1-247-865-00	CARBON 27K 5% 1/6W
R322	1-247-081-00	CARBON 6.8 5% 1/4W
R324	1-247-885-00	CARBON 180K 5% 1/6W
R325	1-247-873-00	CARBON 56K 5% 1/6W
R326	1-247-872-00	CARBON 51K 5% 1/6W
R327	1-247-869-00	CARBON 39K 5% 1/6W
R328	1-247-817-00	CARBON 270 5% 1/6W
R329	1-247-817-00	CARBON 270 5% 1/6W
R330	1-247-817-00	CARBON 270 5% 1/6W
R360	1-247-855-00	CARBON 10K 5% 1/6W
R361	1-247-839-00	CARBON 2.2K 5% 1/6W
R362	1-247-895-00	CARBON 470K 5% 1/6W
R363	1-247-863-00	CARBON 22K 5% 1/6W
R364	1-247-887-00	CARBON 220K 5% 1/6W
R365	1-247-839-00	CARBON 2.2K 5% 1/6W
R366	1-247-879-00	CARBON 100K 5% 1/6W
R367	1-247-867-00	CARBON 33K 5% 1/6W
R501	1-247-839-00	CARBON 2.2K 5% 1/6W
R502	1-247-826-00	CARBON 620 5% 1/6W
R503	1-247-847-00	CARBON 4.7K 5% 1/6W
R504	1-247-825-00	(V33R)...CARBON 560 5% 1/6W
R504	1-247-826-00	(V55R)...CARBON 620 5% 1/6W

ELECTRICAL PARTS

Ref.No.	Part No.	Description
R505	1-247-840-00	CARBON 2.4K 5% 1/6W
R506	1-247-857-00	CARBON 12K 5% 1/6W
R507	1-247-839-00	CARBON 2.2K 5% 1/6W
R508	1-247-858-00	CARBON 13K 5% 1/6W
R511	1-247-831-00	(V55R)...CARBON 1K 5% 1/6W
R511	1-247-833-00	(V33R)...CARBON 1.2K 5% 1/6W
R512	1-247-831-00	CARBON 1K 5% 1/6W
R513	1-247-833-00	CARBON 1.2K 5% 1/6W
R514	1-247-831-00	CARBON 1K 5% 1/6W
R515	1-247-831-00	CARBON 1K 5% 1/6W
R516	1-247-831-00	CARBON 1K 5% 1/6W
R517	1-247-831-00	CARBON 1K 5% 1/6W
R518	1-247-831-00	CARBON 1K 5% 1/6W
R519	1-247-859-00	CARBON 15K 5% 1/6W
R520	1-247-879-00	CARBON 100K 5% 1/6W
R521	1-247-855-00	(V33R)...CARBON 10K 5% 1/6W
R522	1-247-879-00	CARBON 100K 5% 1/6W
R523	1-247-831-00	(V33R)...CARBON 1K 5% 1/6W
R524	1-247-831-00	(V33R)...CARBON 1K 5% 1/6W
R525	1-247-855-00	(V33R)...CARBON 10K 5% 1/6W
R526	1-247-847-00	CARBON 4.7K 5% 1/6W
R527	1-247-871-00	CARBON 47K 5% 1/6W
R528	1-247-871-00	CARBON 47K 5% 1/6W
R529	1-247-807-00	(V55R)...CARBON 100 5% 1/6W
R530	1-247-783-00	CARBON 10 5% 1/6W
R531	1-247-861-00	CARBON 18K 5% 1/6W
R532	1-247-857-00	CARBON 12K 5% 1/6W
R533	1-247-861-00	CARBON 18K 5% 1/6W
R534	1-247-903-00	CARBON 1M 5% 1/6W
R535	1-247-841-00	CARBON 2.7K 5% 1/6W
R536	1-247-879-00	CARBON 100K 5% 1/6W
R537	1-247-855-00	CARBON 10K 5% 1/6W
R538	1-247-879-00	CARBON 100K 5% 1/6W
R539	1-247-819-00	CARBON 330 5% 1/6W
R540	1-247-855-00	CARBON 10K 5% 1/6W
R541	1-247-813-00	CARBON 180 5% 1/6W
R542	1-247-813-00	CARBON 180 5% 1/6W
R543	1-247-811-00	CARBON 150 5% 1/6W
R544	1-247-821-00	CARBON 390 5% 1/6W
R545	1-247-855-00	CARBON 10K 5% 1/6W
R546	1-247-855-00	CARBON 10K 5% 1/6W
R547	1-247-867-00	CARBON 33K 5% 1/6W
R549	1-247-847-00	CARBON 4.7K 5% 1/6W
R550	1-247-855-00	CARBON 10K 5% 1/6W
R551	1-247-871-00	CARBON 47K 5% 1/6W
R552	1-247-871-00	CARBON 47K 5% 1/6W
R553	1-247-871-00	CARBON 47K 5% 1/6W
RV101	1-228-994-00	RES, ADJ, CARBON 10K
RV102	1-228-994-00	RES, ADJ, CARBON 10K
RV103	1-228-996-00	RES, ADJ, CARBON 47K
RV104	1-230-713-11	RES, VAR, SLIDE 20K/20K(REC LEVEL)
RV201	1-228-994-00	RES, ADJ, CARBON 10K
RV202	1-228-994-00	RES, ADJ, CARBON 10K

ELECTRICAL PARTS

Ref.No.	Part No.	Description
RV203	1-228-996-00	RES, ADJ, CARBON 47K
RV204	1-230-713-11	RES, VAR, SLIDE 20K/20K(REC LEVEL)
RY301	1-515-473-00	RELAY
S1	1-554-303-00	SWITCH, KEY BOARD (REV)
S2	1-554-303-00	SWITCH, KEY BOARD (REC)
S3	1-554-303-00	SWITCH, KEY BOARD (FWD)
S4	1-554-303-00	SWITCH, KEY BOARD (REC MUTE)
S5	1-554-303-00	SWITCH, KEY BOARD (AMS)
S6	1-554-303-00	SWITCH, KEY BOARD (PAUSE)
S7	1-554-303-00	SWITCH, KEY BOARD (REW)
S8	1-554-303-00	SWITCH, KEY BOARD (STOP)
S9	1-554-303-00	SWITCH, KEY BOARD (FF)
S301	1-554-691-00	SWITCH, SLIDE (DOLBY NR)
S501	1-554-168-00	SWITCH, SLIDE (TIMER)
S502	1-554-165-00	SWITCH, SLIDE (DIRECTION MODE)
S601	1-553-856-00	SWITCH, KEY BOARD (HALF)
S602	1-553-856-00	SWITCH, KEY BOARD (70U)
S603	1-553-856-00	SWITCH, KEY BOARD (METAL)
S604	1-553-856-00	SWITCH, KEY BOARD (ERASE PROOF (A))
S605	1-554-410-00	SWITCH, LEAF (POWER)
S606	1-553-856-00	SWITCH, KEY BOARD (ERASE PROOF (B))
S608	1-554-883-11	SWITCH, SLIDE (DIRECTION)
S701 ⚠	1-553-318-00	(V55R)...SWITCH, PUSH (AC POWER)(1 KEY)
SPK101	1-235-186-00	ENCAPSULATED COMPONENT
SPK201	1-235-186-00	ENCAPSULATED COMPONENT
T301	1-433-283-11	TRANSFORMER, BIAS OSCILLATION
T701 ⚠	1-448-047-11	(V55R)...TRANSFORMER, POWER
X501	1-527-532-00	OSCILLATOR, CERAMIC

ACCESSORY & PACKING MATERIAL

Part No.	Description
1-556-793-31	(V55R)...CORD, CONNECTION
3-312-970-00	SHEET, PROTECTION
3-313-230-00	(V55R)...CUSHION (LEFT) (A), LOWER
3-313-231-00	(V55R)...CUSHION (RIGHT) (B), LOWER
3-313-232-00	(V55R)...CUSHION (LEFT) (C), UPPER
3-313-233-00	(V55R)...CUSHION (RIGHT) (D), UPPER
3-325-004-01	(V55R)...INDIVIDUAL CARTON
3-701-630-00	(V55R)...BAG, POLYETHYLENE
3-760-340-11	(V55R:AEP)...MANUAL, INSTRUCTION
3-760-340-41	(V55R).....MANUAL, INSTRUCTION

The components identified by shading and mark ⚠ are critical for safety. Replace only with part number specified.

Les composants identifiés par une trame et une marque ⚠ sont critiques pour la sécurité. Ne les remplacer que par une pièce portant le numéro spécifié.

English
85B0550-1
Printed in Japan

9-951-688-11

Sony Corporation

SONY Service Bulletin

Date	Ref.	Model
23 April 1986	TC-01586	TC-V11/V33/V270/118/157/158R 177R/W5

Subject	Codification
Squeaking Thrust Retainer Grincement du palier de butée Quietschendes Drucklager Fiador de empuje chirriante	010, 323

English

SYMPTOM: the thrust retainer of the flywheel squeaks.

CAUSE: almost all the grease on the surface of the thrust retainer flows to the flywheel shaft and vanishes.

REMEDY: replace the flywheel with the original, part number of which is listed in the Service Manual.

Français

SYMPTOME: le palier de butée du volant grince.

CAUSE: presque tout le lubrificant de la surface du palier s'écoule sur l'axe du volant et disparaît.

REMEDE: remplacer le volant par la pièce originale dont le code pièce est mentionné dans le manuel de service.

Deutsch

SYMPTOM: das Drucklager des Schwungrads quietscht.

URSACHE: die Schmiere fließt vom Drucklager auf die Schwungradwelle und entschwindet.

ABHILFE: das Schwungrad gegen das Original austauschen, dessen Ersatzteilnummer in der Kundendienstanleitung angegeben ist.

Español

SINTOMA: el fiador de empuje del volante chirría.

CAUSA: casi todo el lubricante en el fiador de empuje se derrama al eje del volante y se desvanece.

REMEDIO: sustituir el volante por el original, cuyo código se alista en el manual de servicio.

	DESCRIPTION	PART NUMBER	
		USED IN SET	REPLACEMENT (ORIGINAL)
ONE WAY TIPE	FLYWHEEL (T), ASSY	X-3319-630-1	X-3319-606-1
REVERSE TYPE	FLYWHEEL (T), ASSY FLYWHEEL, ASSY	X-3319-630-1 X-3319-631-1	X-3319-606-1 X-3319-601-1

Apply SONY grease(SGL-501;P/N 7-662-001-62)