# TC-KE200/KE300/KE400S/RX300

# SERVICE MANUAL

**Ver 1.1 2001. 05**

*US Model*
*TC-KE400S*

*Canadian Model*
*TC-RX300*

*AEP Model*
*TC-KE200/KE300/KE400S*

*UK Model*
*TC-KE200/KE400S*

*E Model*
*TC-KE300*

*Australian Model*
*TC-KE300/KE400S*

**Photo : TC-KE400S**

• Dolby noise reduction and HX Pro headroom extension manufactured under license from Dolby Laboratories Licensing Corporation. HX Pro originated by Bang & Olufsen.

"DOLBY", the double-D symbol DD and "HX PRO" are trademarks of Dolby Laboratories Licensing Corporation.

| | |
|---|---|
| Model Name Using Similar Mechanism | TC-K215/K361/K461S/RX361 |
| Tape Transport Mechanism Type | TC-KE200 : TCM-190VB22CS<br>TC-KE300/KE400S : TCM-190VB12CS<br>TC-RX300 : TCM-190RB12C |

## SPECIFICATIONS

### System

**Recording system**
4-track 2-channel stereo

**Fast winding time (approx.)**
90 sec. (with Sony C-60 cassette)

**Bias**
AC bias

**Heads**
Erasing head × 1 (F&F head)
Playing/Recording head × 1 (SD head)

**Motors**
Capstan motor × 1 (DC servo motor)
Reel motor × 1 (DC motor)

**Signal-to-noise ratio (at peak level, weighted, and with Dolby NR off)**
Type I tape, Sony Type I (NORMAL): 55 dB
Type II tape, Sony Type II (HIGH): 57 dB
Type IV tape, Sony Type IV (METAL): 58 dB

**S/N ratio improvement (approximate values)**
With Dolby B NR on: 5 dB at 1 kHz, 10 dB at 5 kHz
With Dolby C NR on: 15 dB at 500 Hz, 20 dB at 1 kHz

**Harmonic distortion**
0.4% (with Type I tape, Sony Type I (NORMAL): 160n Wb/m 315 Hz, 3rd H.D.)
1.8% (with Type IV tape, Sony Type IV (METAL): 250n Wb/m 315 Hz, 3rd H.D.)

**Frequency response (Dolby NR off)**
Type I tape, Sony Type I (NORMAL) :
EXCEPT KE200
30 - 15,000 Hz ( ± 3 dB, IEC)
20 - 16,000 Hz ( ± 6 dB)
KE200
30 - 14,000 Hz ( ± 3 dB, IEC)
20 - 15,000 Hz ( ± 6 dB)
Type II tape, Sony Type II (HIGH) :
EXCEPT KE200
30 - 16,000 Hz ( ± 3 dB, IEC)
20 - 17,000 Hz ( ± 6 dB)
KE200
30 - 15,000 Hz ( ± 3 dB, IEC)
20 - 16,000 Hz ( ± 6 dB)

— Continued on page 2 —

## STEREO CASSETTE DECK

SONY®

Type IV tape, Sony Type IV (METAL) :
EXCEPT KE200
30 - 18,000 Hz ( ± 3 dB, IEC)
30 - 13,000 Hz ( ± 3 dB, − 4 dB recording)
20 - 19,000 Hz ( ± 6 dB)
KE200
30 - 15,000 Hz ( ± 3 dB, IEC)
30 - 13,000 Hz ( ± 3 dB, − 4 dB recording)
20 - 16,000 Hz ( ± 6 dB)

**Wow and flutter**
± 0.13% W. Peak (IEC)
0.07% W. RMS (NAB)
±0.18% W. Peak (DIN)

## Inputs

**Line inputs (phono jacks)**
Sensitivity: 0.16 V
Input impedance: 47 kilohms

## Outputs

**Line outputs (phono jacks)**
Rated output level: 0.5 V at a load impedance of 47 kilohms
Load impedance: Over 10 kilohms

**Headphones (stereo phone jack)**
Output level: 0.25 mW at a load impedance of 32 ohms

## General

**Power requirements**

| Where purchased | Power requirements |
|---|---|
| US, Canadian model : | 120 V AC, 60 Hz |
| AEP, UK, German, Malaysia, Singapore model : | 220 - 230 V AC, 50/60 Hz |
| Australian model : | 240 V AC, 50/60 Hz |
| E model : | 110 - 120 V or 220 - 240 V AC, 50/60 Hz adjustable with the voltage selector |

**Power consumption**
19 W (EXCEPT KE400S)
20 W (KE400S)

**Dimensions (approx.) (w/h/d)**
430 × 120 × 310 mm (17 × 4 3/4 × 12 1/4 inches)
incl. projecting parts and controls

**Mass (approx.)**
3.5 kg (7 lbs 11 oz)

## Supplied accessories
Audio connecting cords (2)

Design and specifications are subject to change without notice.

# TABLE OF CONTENTS


Specifications ····· 1

**1. GENERAL**
Identifying the Parts on the Front Panel ····· 4

**2. DISASSEMBLY**
2-1. Front Panel Removal ····· 5
2-2. Mechanism Deck Section Removal ····· 5
2-3. Head and Pinch Roller Removal ····· 6
2-4. Fitting Base Block Removal ····· 6
2-5. Motor Removal ····· 6

**3. ADJUSTMENTS**
3-1. Mechanical Adjustments ····· 7
3-2. Electrical Adjustments ····· 7

**4. EXPLANATION OF IC TERMINALS** ····· 10

**5. DIAGRAMS**
5-1. Printed Wiring Boards − Main Section − (TC-KE200/KE300/RX300) ····· 12
5-2. Schematic Diagram − Main Section − (TC-KE200/KE300/RX300) ····· 15
5-3. Schematic Diagram − Main Section − (TC-KE400S) ····· 20
5-4. Printed Wiring Boards − Main Section − (TC-KE400S) ····· 25
5-5. Circuit Boards Location ····· 28
5-6. Printed Wiring Boards − Audio Section − ····· 29
5-7. Schematic Diagram − Audio Section − ····· 33

**6. EXPLODED VIEWS**
6-1. Chassis Section ····· 37
6-2. Front Panel Section ····· 39
6-3. Mechanism Section 1 ····· 40
6-4. Mechanism Section 2 ····· 41

**7. ELECTRICAL PARTS LIST** ····· 42

TC-KE200
TC-KE300
TC-KE400S
TC-RX300

**MODEL IDENTIFICATION**

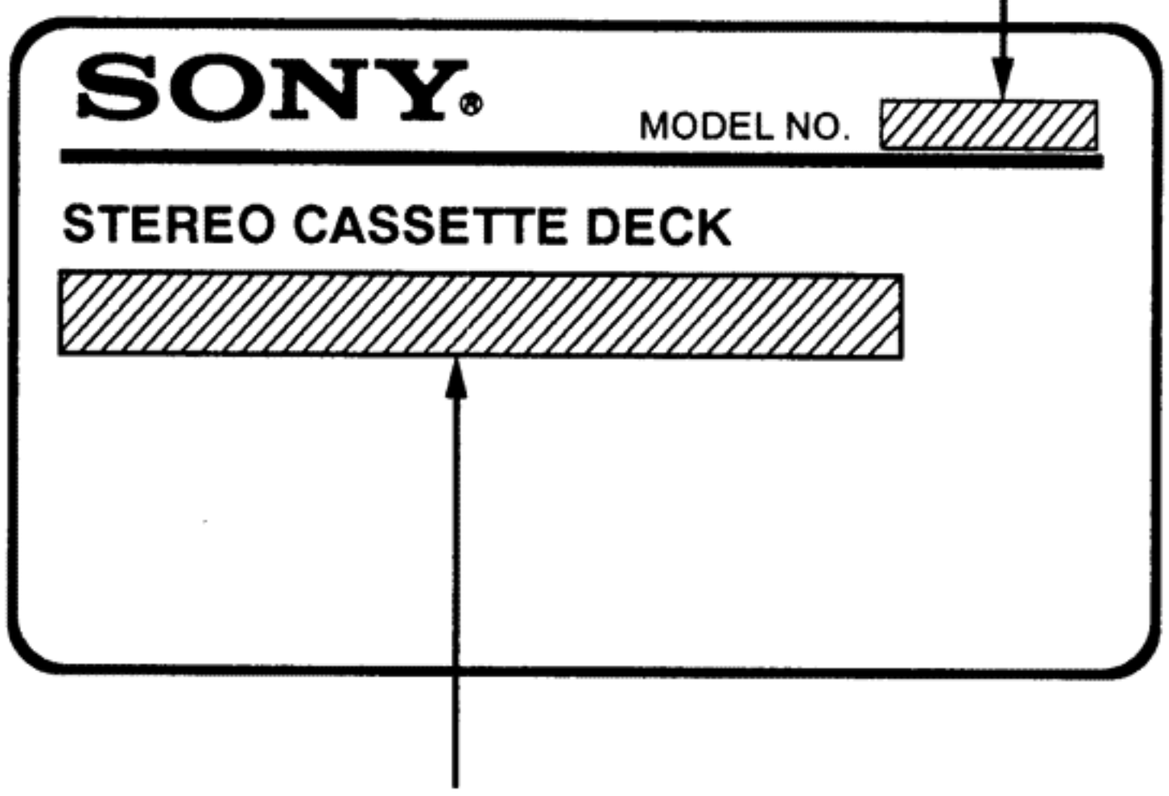


US, Canadian model : AC 120V 60Hz
Australian model : AC 240V~50/60Hz
AEP, UK, German, Malaysia,
Singapore model : AC 220-230V~50/60Hz
E model : AC 110-120V or 220-240V~50/60Hz

**SAFETY-RELATED COMPONENT WARNING!!**

**COMPONENTS IDENTIFIED BY MARK ⚠ OR DOTTED LINE WITH MARK ⚠ ON THE SCHEMATIC DIAGRAMS AND IN THE PARTS LIST ARE CRITICAL TO SAFE OPERATION. REPLACE THESE COMPONENTS WITH SONY PARTS WHOSE PART NUMBERS APPEAR AS SHOWN IN THIS MANUAL OR IN SUPPLEMENTS PUBLISHED BY SONY.**

**ATTENTION AU COMPOSANT AYANT RAPPORT À LA SÉCURITÉ!**

**LES COMPOSANTS IDENTIFIÉS PAR UNE MARQUE ⚠ SUR LES DIAGRAMMES SCHÉMATIQUES ET LA LISTE DES PIÈCES SONT CRITIQUES POUR LA SÉCURITÉ DE FONCTIONNEMENT. NE REMPLACER CES COMPOSANTS QUE PAR DES PIÈCES SONY DONT LES NUMÉROS SONT DONNÉS DANS CE MANUEL OU DANS LES SUPPLÉMENTS PUBLIÉS PAR SONY.**

# SAFETY CHECK-OUT

After correcting the original service problem, perform the following safety check before releasing the set to the customer:
Check the antenna terminals, metal trim, "metallized" knobs, screws, and all other exposed metal parts for AC leakage. Check leakage as described below.

## LEAKAGE TEST

The AC leakage from any exposed metal part to earth ground and from all exposed metal parts to any exposed metal part having a return to chassis, must not exceed 0.5 mA (500 microampers). Leakage current can be measured by any one of three methods.

1. A commercial leakage tester, such as the Simpson 229 or RCA WT-540A. Follow the manufacturers' instructions to use these instruments.
2. A battery-operated AC milliammeter. The Data Precision 245 digital multimeter is suitable for this job.
3. Measuring the voltage drop across a resistor by means of a VOM or battery-operated AC voltmeter. The "limit" indication is 0.75 V, so analog meters must have an accurate low-voltage scale. The Simpson 250 and Sanwa SH-63Trd are examples of a passive VOM that is suitable. Nearly all battery operated digital multimeters that have a 2 V AC range are suitable. (See Fig. A)

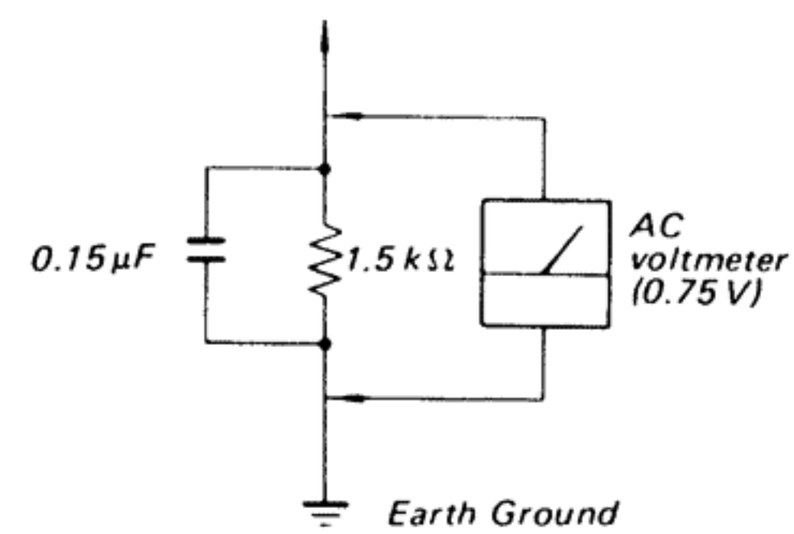


*Fig. A. Using an AC voltmeter to check AC leakage.*

# SECTION 1
# GENERAL

## IDENTIFYING THE PARTS ON THE FRONT PANEL

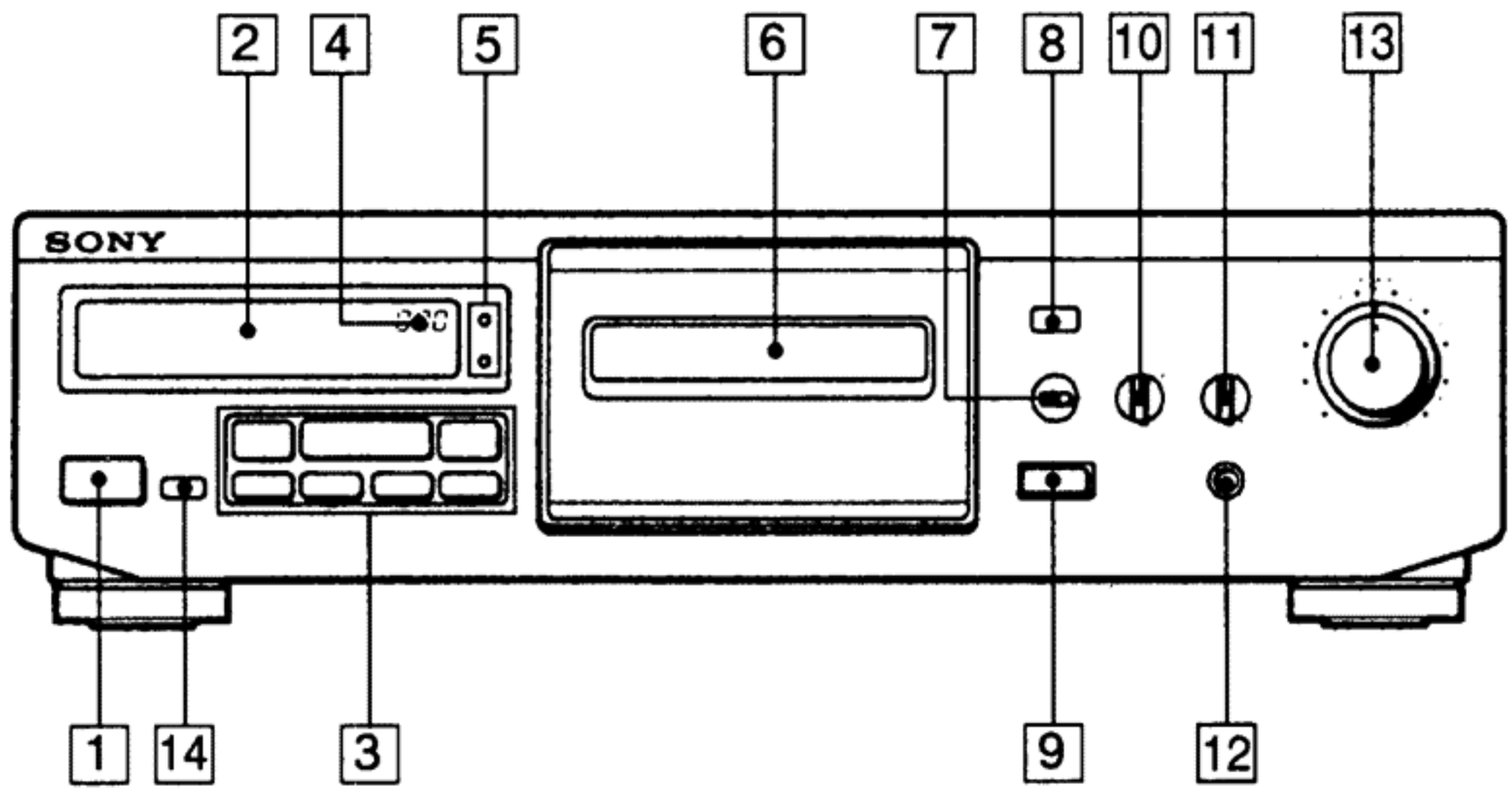


1 POWER switch
2 Display panel
3 Tape operation buttons
- ◀◀ (rewind) (Multi-AMS**) button
- ▷ (play) button (KE200/KE300/KE400S)
- ◁/▷ (forward play and reverse play) button (RX300)
- ▶▶ (fast-forward) (Multi-AMS**) button
- ■ (stop) button
- ❚❚ PAUSE button
- ○ REC MUTE (record muting) button
- ● REC (record) button

4 Tape counter
5 Counter buttons
RESET button
MEMORY button
6 Cassette holder
7 AUTO CAL button (EXCEPT KE200)
8 Remote control sensor
9 ≜ (eject) button
10 DOLBY NR (noise reduction) button
11 BALANCE control
12 PHONES jack (stereo phone jack)
13 REC (recording) LEVEL control
14 DIRECTION MODE switch (RX300 only)

**AMS is an abbreviation for Automatic Music Sensor

# SECTION 2
# DISASSEMBLY

**Note** : Follow the disassembly procedure in the numerical order given.

**CASE**
Unscrew the four case attachment screws M3 × 8 and remove the case.

## 2-1. FRONT PANEL REMOVAL

FRONT PANEL ❶ – ❼
VOLTAGE SELECTOR 1 – 2

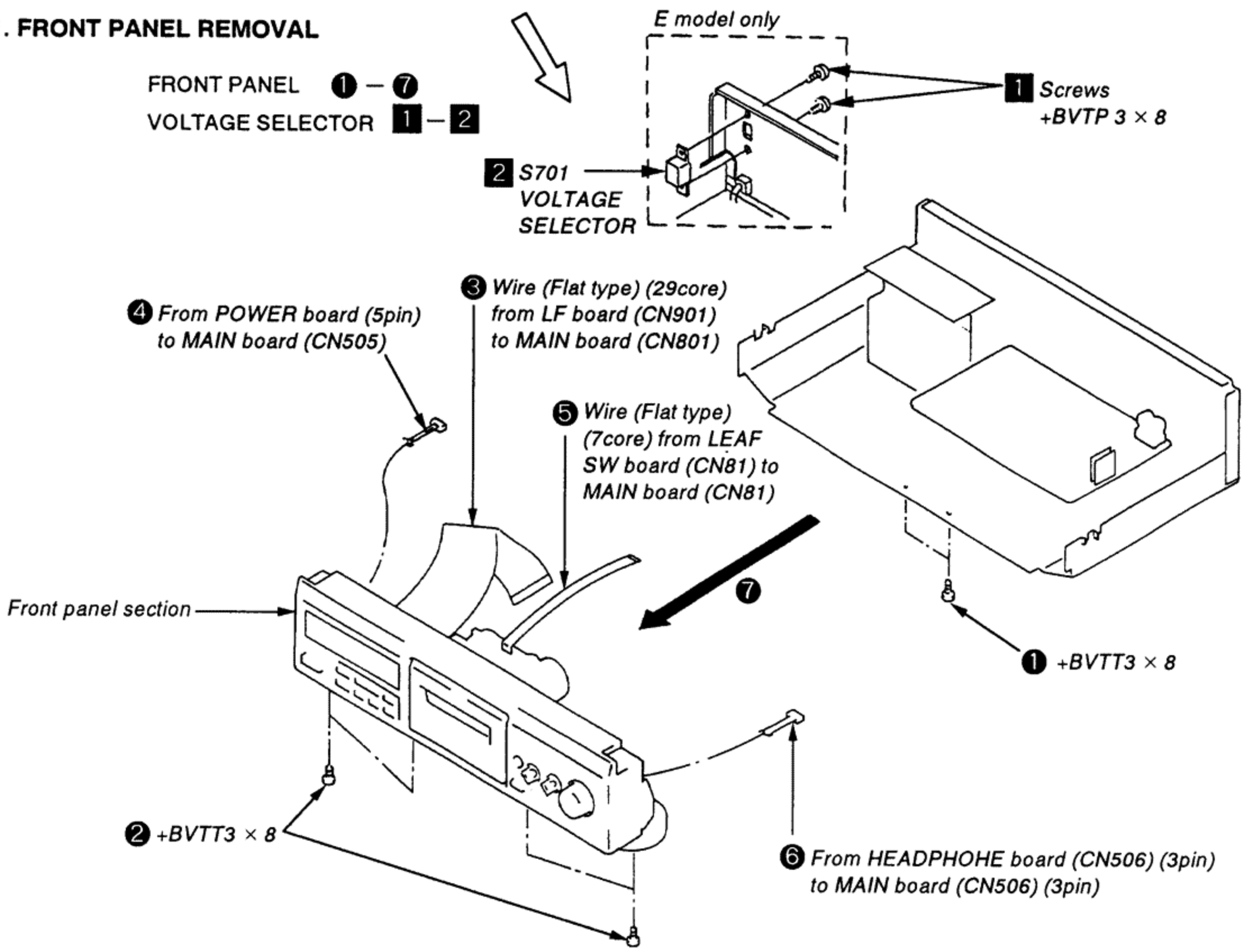


## 2-2. MECHANISM DECK SECTION REMOVAL

❶ Press the EJECT button.

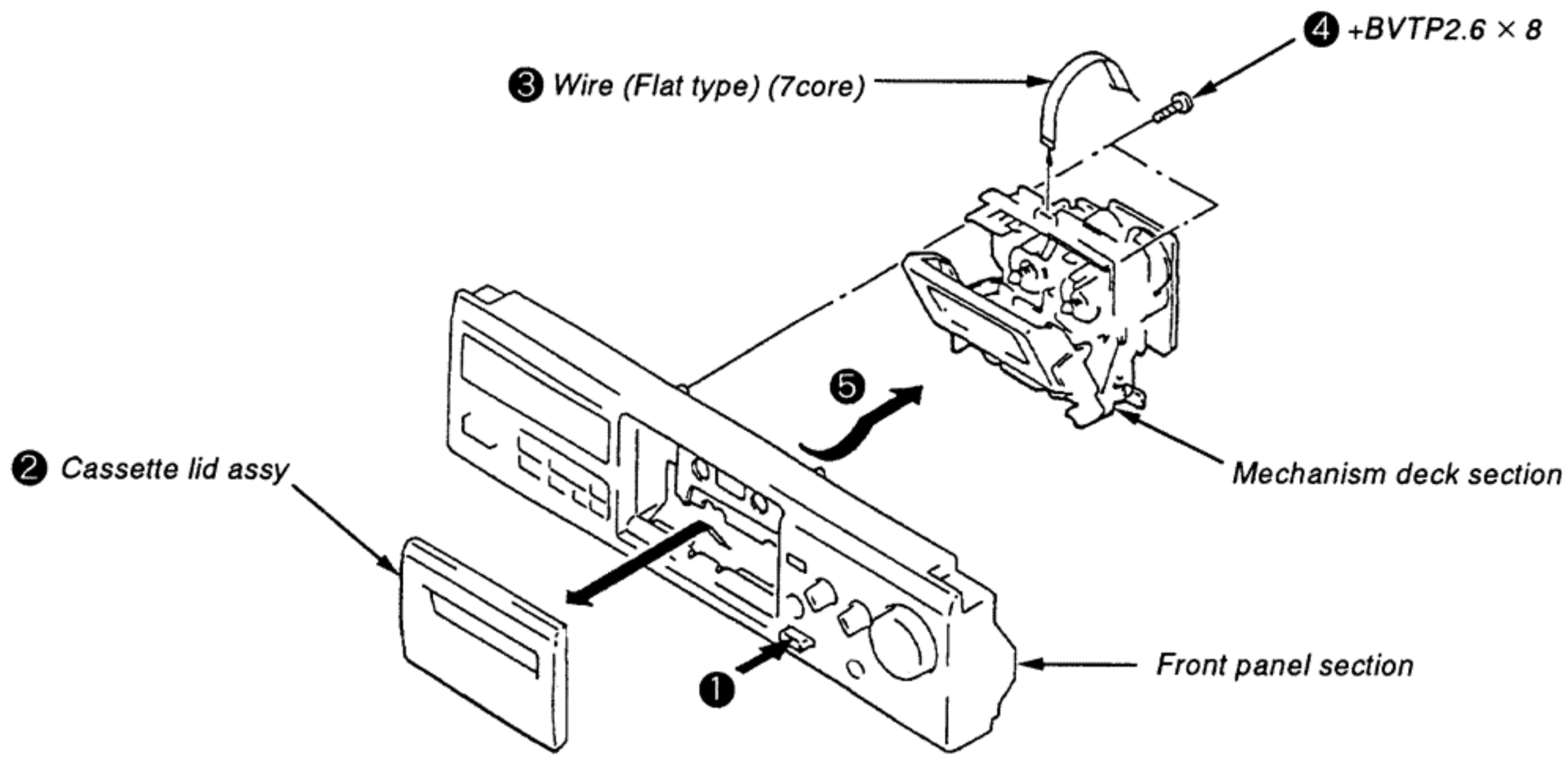

## 2-3. HEAD AND PINCH ROLLER REMOVAL

**EXCEPT TC-RX300 :**

❻ Erase head (HE901)

❺ +B 2 × 10

❸ Screw (adjimuth)

❷ Lever (pinch F) assy

❹ REC/PB head (HRP901)

❶ Claw

**TC-RX300 :**

❸ Claw

❹ Lever (pinch lever REV) assy

❶ Claw

❻ Head base assy (HRPE901)

❺ Torsion spring

❷ Lever (pinch lever FWD) assy

## 2-4. FITTING BASE BLOCK REMOVAL

❶ Screws (PTPWH2 × 23)

❷ Fitting base block

**TC-RX300**

When installing, pull the FR belt and put around the claws.

When installing, pull the capstan belt and put around the claws.

## 2-5. MOTOR REMOVAL

❷ Motor flexible board (CNP72)

Ground plate

❶ Connectors (CNP71)

❻ Capstan motor (M2)

❹ Audio board

❺ +B2.6 × 3

❸ Claw

Square belt (FR)

❽ Reel motor (M1)

❼ +P2.6 × 2.8

# SECTION 3
# ADJUSTMENTS

## 3-1. MECHANICAL ADJUSTMENTS

### PRECAUTION

1. Clean the following parts with a denatured alcohol-moistened swab:
   record/playback/erase head  pinch roller
   rubber belts  capstan
2. Demagnetize the record/playback head with a head demagnetizer.
3. Do not use a magnetized screwdriver for the adjustment.
4. After the adjustments, apply suitable locking compound to the parts adjusted.
5. The adjustments should be performed with the rated power supply voltage unless otherwise noted.

**Torque Measurement**

| Mode | Torque meter | Meter reading |
|---|---|---|
| Forward | CQ-102C | 35 to 60g • cm (0.48 to 0.83 oz • inch) |
| Forward back tension | CQ-102C | 2 to 60g • cm (0.03 to 0.08 oz • inch) |
| Reverse (RX300 only) | CQ-102RC | 35 to 60g • cm (0.48 to 0.83 oz • inch) |
| Reverse back tension (RX300 only) | CQ-102RC | 2 to 6g • cm (0.03 to 0.08 oz • inch) |
| FF/REW | CQ-201B | 70 to 110g•cm (0.98 to 1.52 oz•inch) |

## 3-2. ELECTRICAL ADJUSTMENTS

### PRECAUTION

1. The adjustment should be performed in the publication.
   (Be sure to male playback adjustment at first.)
2. The adjustments and measurement should be performed for both L-CH and R-CH.
   - Position of switches and controls knobs
     DOLBY NR switch : OFF
   - Standard record position:
     Deliver the standard input signal level to input jack and set the REC LEVEL control to obtain the standard output signal level as follows.

– Record Mode –

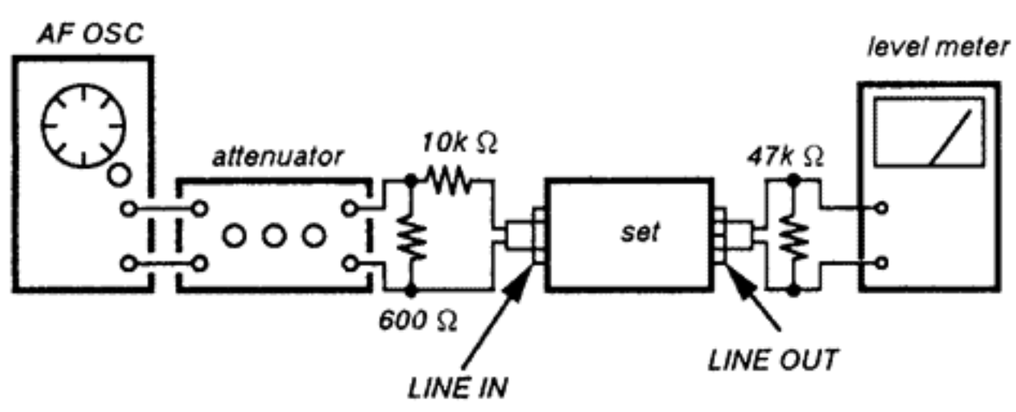


**Standard Input Level**

| Input terminal | LINE IN |
|---|---|
| source impedance | 10k Ω |
| input signal level | 0.5V ( − 3.8dB) |

**Standard Output Level**

| Output terminal | LINE OUT |
|---|---|
| load impedance | 47k Ω |
| output signal level | 0.5V ( − 3.8dB) |

**Test Tape**

| Tape | Contents | Use |
|---|---|---|
| P-4-A100 | 10kHz, − 10dB | Azimuth Adjustment |
| P-4-L300 | 315Hz, 0dB | PB Level Adjustment |
| WS-48B | 3kHz, 0dB | Tape Speed Adjustment |

0dB=0.775V

### Test Mode

1. Insert a short-circuit plug into TP801 (2P) and turn ON the power switch. (Earth pin ⑲ of IC801 and turn ON the power switch.)
   At first, all the fluorescent tubes light up, then the system returns to normal display. (However, "00 00" is not displayed on the counter.)
2. To release the test mode, remove the short plug and turn off the power switch.
3. Remove the short plug after completion of adjustment.

### Record/Playback Head Azimuth Adjustment

**Procedure :**

1. playback Mode

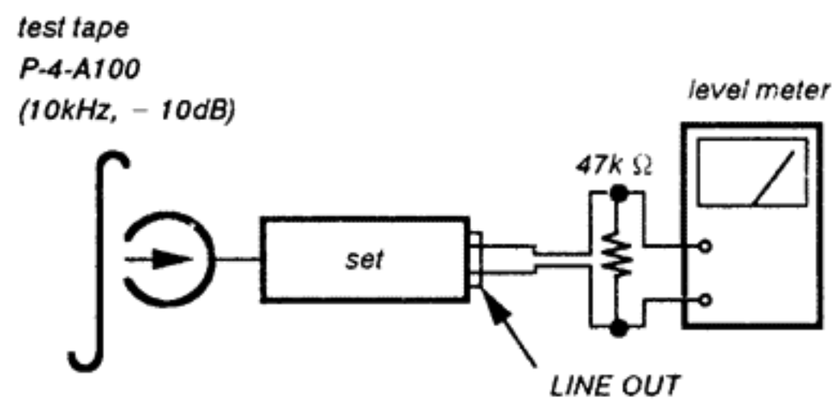


2. Turn the adjustment screw for the maximum output levels. If these levels do not match, turn the adjustment screw until both of output levels match together within 1dB.

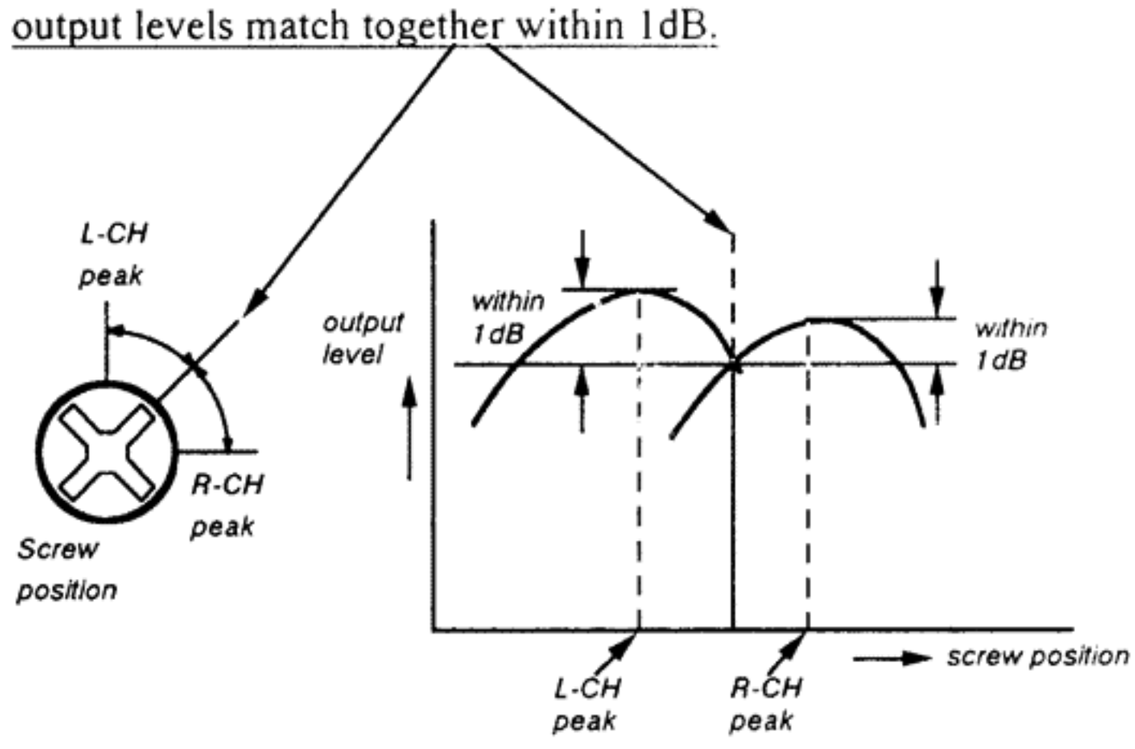

3. Phase check
   Playback Mode

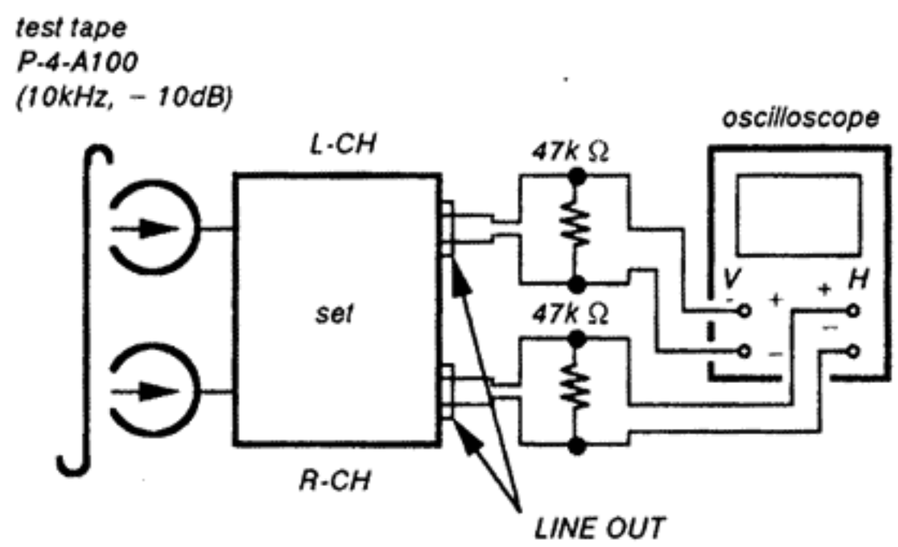


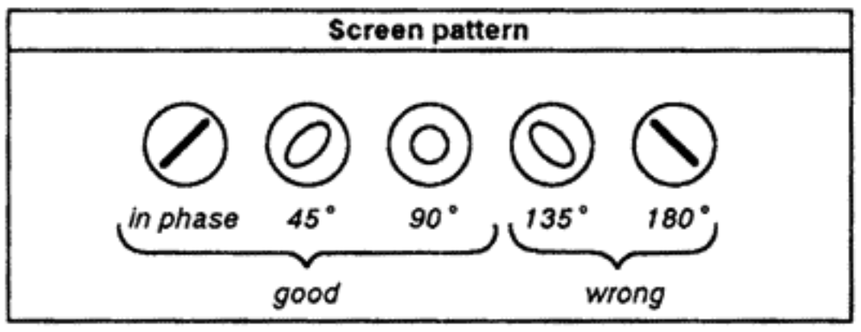


4. After the adjustment, lock the adjustment screws with suitable locking compound.

**Adjustment Location :** − record/playback head −

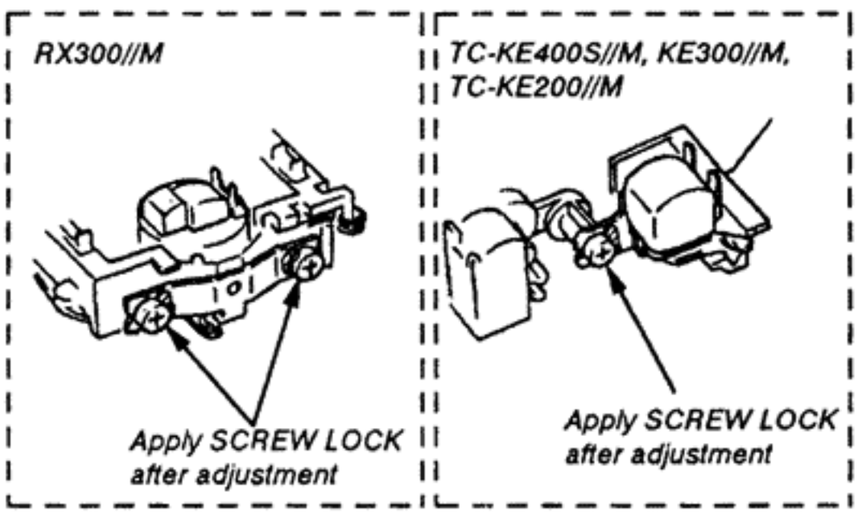


## Tape Speed Adjustment

**Procedure :**

− Playback Mode −

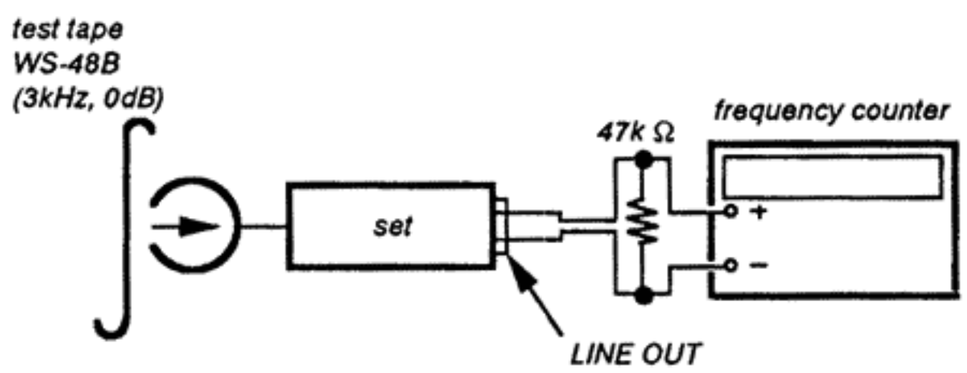


1. Adjust RV71 so that the frequency counter reading becomes 3,000 ± 10Hz.
2. If, the frequency conter reading does not become 3,000 ± 10Hz. Turn RV72 and back to 1st. step again.

**Note :**

Turn RV72 to clockwise − Tape speed becomes fast.
Turn RV72 to counter clockwise − Tape speed becomes slow.

Frequency difference between the beginning and the end of the tape should be within 1%.

**Adjustment Location :** AUDIO board (Page 9)

## Playback Level Adjustment

**Procedure :**

− Playback Mode −

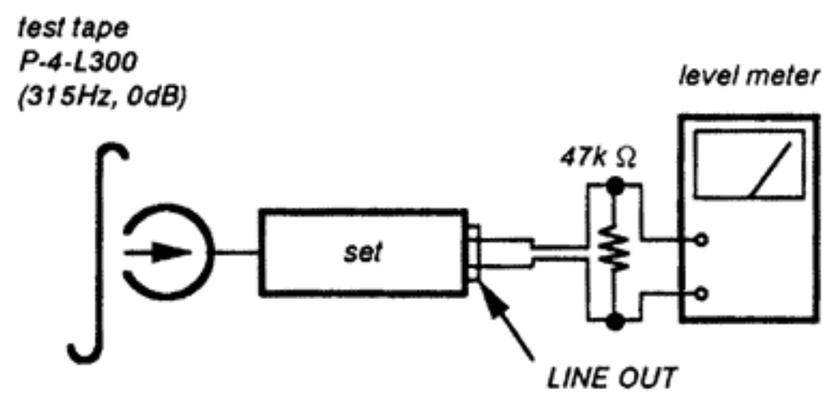


Adjust RV11 (L-CH) and RV21 (R-CH) so the level meter reading becomes the adjustment limits below.

**Adjustment Value :**

LINE OUT level : − 7.7 ± 0.5dB (0.301 to 0.338V)

Level difference between channels : within 0.5dB

Confirm the LINE OUT level does not change in playback mode while changing the mode from playback to stop several times

**Adjustment Location :** AUDIO board (Page 9)

## Bias Consumption Current Adjustment

This adjustment should be performed when replacing the head assy or the bias oscillating transformer (T81, T91).

**Procedure :**

− Record Mode −

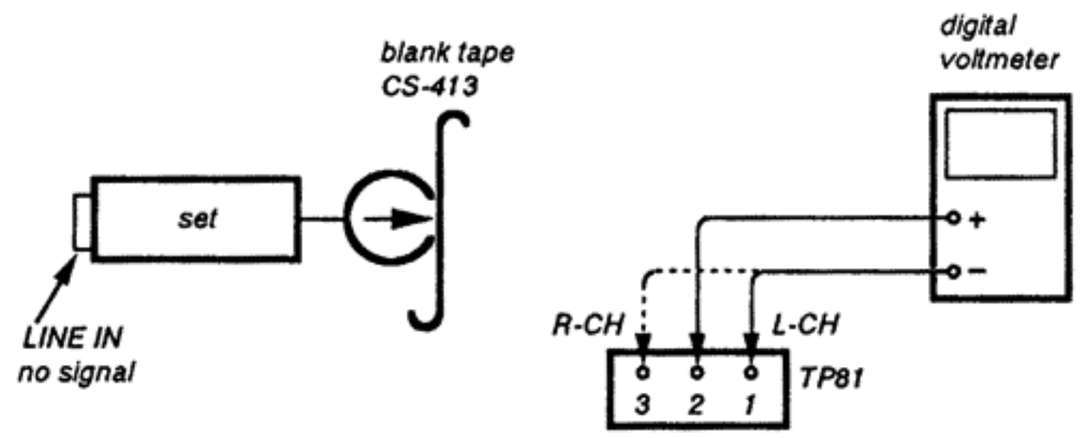


1. Connect the digital voltmeter to test point TP81.
2. Set RV81 (L-CH) and RV91 (R-CH) to mechanical center.
3. Set to record mode.
4. Adjust T81 (L-CH) and T91 (R-CH) so that the digital voltmeter reading becomes minimum.

**Adjustment Location :** AUDIO board (Page 9)

## Record Bias Adjustment

**Setting :**

REC LEVEL control : standard record position (Refer to page 7)

**Procedure :**

1. Record Mode

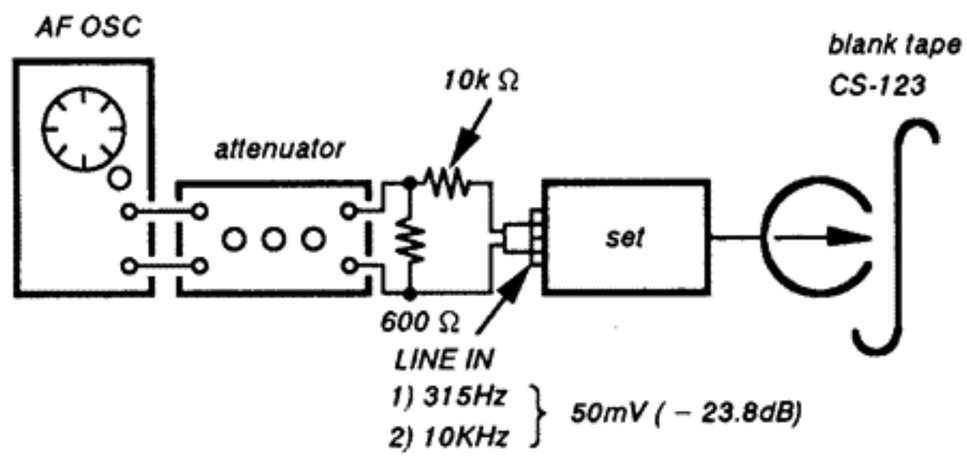


2. Playback Mode

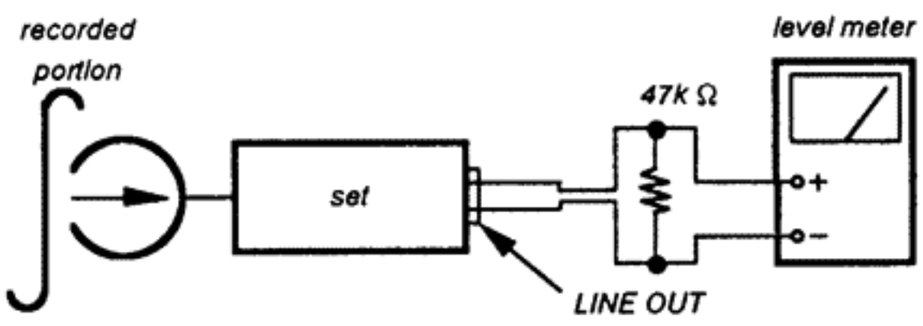


Confirm that the 10kHz playback output is 0 ± 0.5dB relative to the 315Hz output. If necessary, adjust semi-fixed resistor as shown below and repeat the steps gibven above.

TC-KE200 : RV12 (L-CH), RV22 (R-CH)

TC-KE300/KE400S/RX300 : RV81 (L-CH), RV91 (R-CH)

**Adjustment Location :** AUDIO board

## Record Level Adjustment

**Setting :**

REC LEVEL control : standard record position (Refer to page 7)

**Procedure :**

1. Record Mode

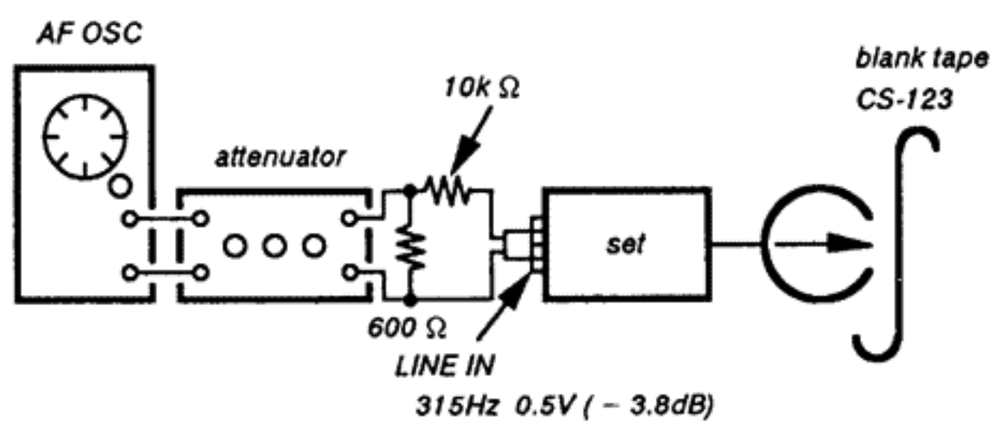


2. Playback Mode

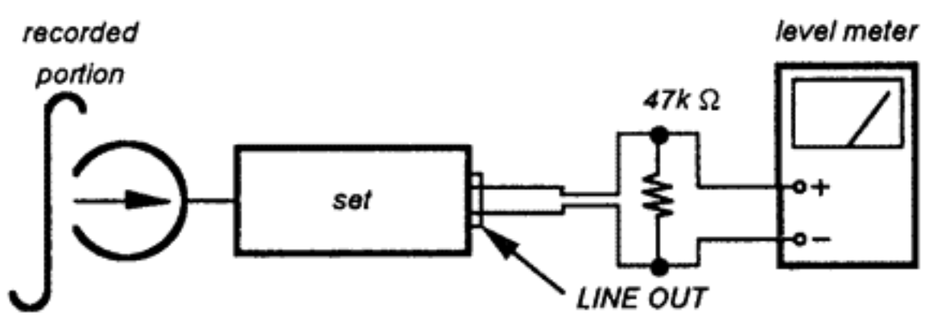


Confirm playback the tape recorded become adjustment level as follows.

If necessary, adjust RV111 (L-CH), RV211 (R-CH) and repeat the steps 1 and 2.

**Adjustment Value :**

LINE OUT level : − 3.8 ± 0.5dB (0.47 to 0.53V)

**Adjustment Location :** MAIN board

**− Adjustment Parts Location Diagrams −**

**[MAIN BOARD]**

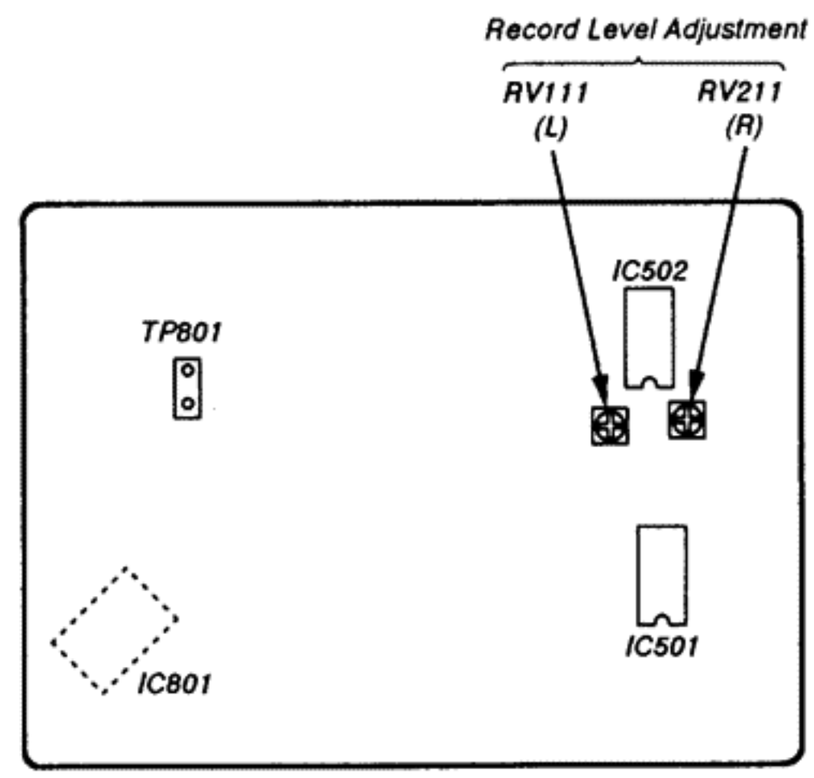


**[AUDIO BOARD]**

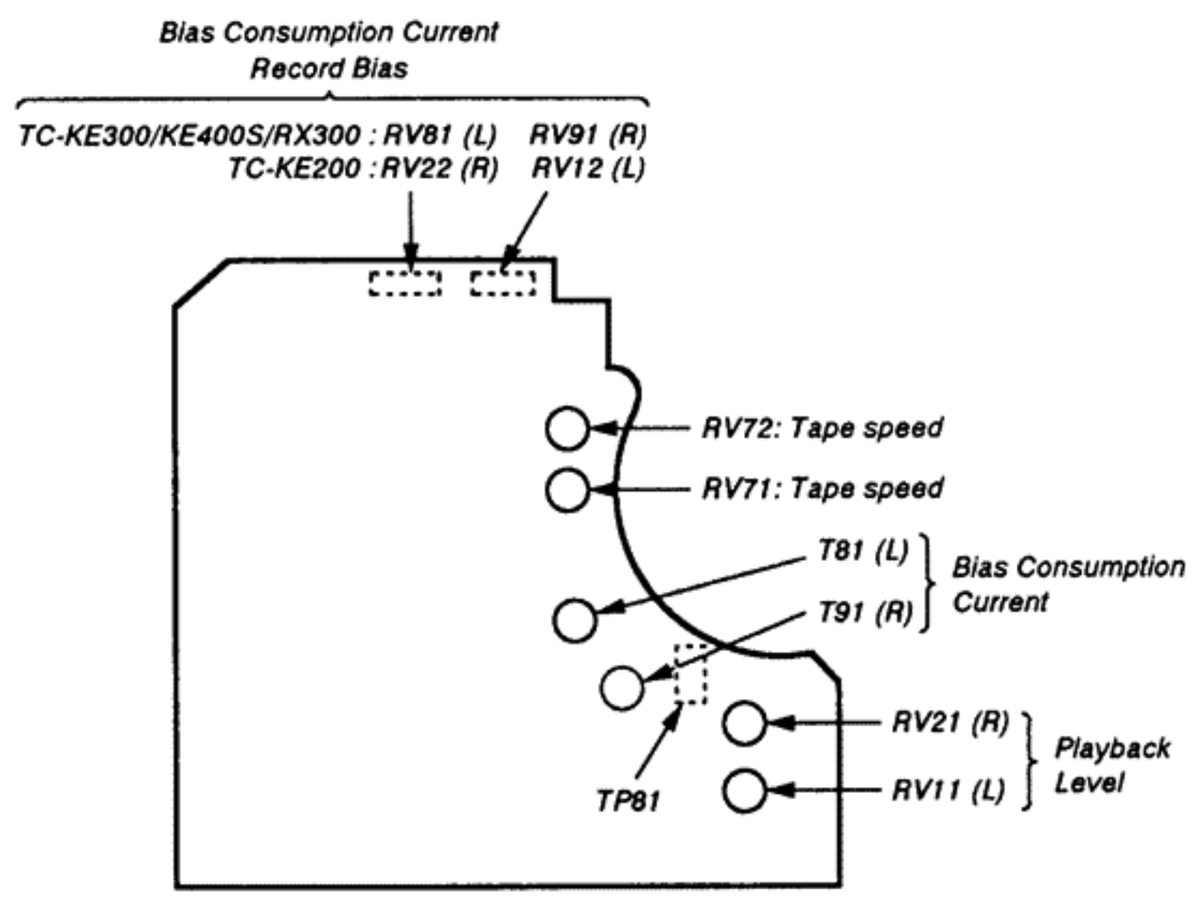

# SECTION 4
# EXPLANATION OF IC TERMINALS

### IC801 CXP82612-022Q (SYSTEM CONTROL)

| Pin No. | Pin name | I/O | Description |
|---|---|---|---|
| 1 | STOP SW | I | Mechanism stop switch input terminal. |
| 2 | SIRCS IN | I | SIRCS signal input terminal. |
| 3 | VRSION 2 | I | Version selector. |
| 4 | NC | – | Not used. |
| 5 | NC | – | Not used. |
| 6 | NC | – | Not used. |
| 7 | MPX ON/$\overline{\text{OFF}}$ | O | MPX filter ON/OFF control terminal. OFF=L |
| 8 | CAL ON/$\overline{\text{OFF}}$ | O | Calibration ON/OFF control terminal. |
| 9 | REC CAL 0 | I | REC calibration terminal. |
| 10 | REC CAL 1 | O | REC calibration terminal. |
| 11 | GP CAL 0 | O | GP calibration terminal. |
| 12 | GP CAL 1 | I | GP calibration terminal. |
| 13 | $\overline{\text{LINE MUTE}}$ | O | Line mute ON/OFF. 0V=Mute |
| 14 | AMS IN | I | AMS signal input terminal. |
| 15 | NC | – | Not used. |
| 16 | REC MUTE | O | REC out mute terminal. |
| 17 | REEL – | O | Reel motor – control terminal. |
| 18 | REEL + | O | Reel motor+ control terminal. |
| 19 | BIAS | O | Bias ON/OFF. |
| 20 | $\overline{\text{RELAY}}$ | O | Relay selector terminal. |
| 21 | CAL KEY | I | Calibration ON/OFF switch input terminal. |
| 22 | METER L | I | Meter level L ch. |
| 23 | KEY X | I | Key switch input terminal. |
| 24 | KEY Y | I | Key switch input terminal. |
| 25 | METER R | I | Meter level R ch. |
| 26 | DOLBY AD | I | Dolby OFF/B/C/S select terminal. |
| 27 | HALF | I | Half pawl input terminal. |
| 28 | METAL CHROM | I | Metal, $CrO_2$ tape selector terminal. "H" : Metal, $CrO_2$ |
| 29 | S. REEL | I | Supply pulse input terminal. |
| 30 | RESET | I | Reset terminal. |
| 31 | XO | O | System clock input terminal. |
| 32 | XI | I | System clock output terminal. |
| 33 | $V_{SS}$ | – | Ground. |
| 34 | BIAS CAL 0 | O | Bias calibration terminal. |
| 35 | BIAS CAL 1 | O | Bias calibration terminal. |
| 36 | BIAS CAL 2 | O | Bias calibration terminal. |
| 37 | BIAS CAL 3 | O | Bias calibration terminal. |
| 38 | CAP. M ON/$\overline{\text{OFF}}$ | O | Capstan motor ON/OFF terminal. |
| 39 | OSC $\overline{\text{H}}$/L | O | OSC H/L control. |
| 40 | OSC $\overline{\text{ON}}$/OFF | O | OSC ON/OFF control. |

| Pin No. | Pin name | I/O | Description |
|---|---|---|---|
| 41 | BC/$\overline{S}$ | O | Dolby B, C/S select terminal. |
| 42 | DOLCON | O | Dolby B/C control terminal. |
| 43 | $\overline{REC}$/PB | O | Recording/Playback selector for dolby IC. |
| 44 | NC | – | Not used. |
| 45 | NC | – | Not used. |
| 46 | S1 | O | Fluorescent indicator tube segment output. |
| 47 | S2 | O | Fluorescent indicator tube segment output. |
| 48 | S3 | O | Fluorescent indicator tube segment output. |
| 49 | S4 | O | Fluorescent indicator tube segment output. |
| 50 | S5 | O | Fluorescent indicator tube segment output. |
| 51 | S6 | O | Fluorescent indicator tube segment output. |
| 52 | S7 | O | Fluorescent indicator tube segment output. |
| 53 | S8 | O | Fluorescent indicator tube segment output. |
| 54 | S9 | O | Fluorescent indicator tube segment output. |
| 55 | S10 | O | Fluorescent indicator tube segment output. |
| 56 | S11 | O | Fluorescent indicator tube segment output. |
| 57 | S12 | O | Fluorescent indicator tube segment output. |
| 58 | S13 | O | Fluorescent indicator tube segment output. |
| 59 | S14 | O | Fluorescent indicator tube segment output. |
| 60 | S15 | O | Fluorescent indicator tube segment output. |
| 61 | S16 | O | Fluorescent indicator tube segment output. |
| 62 | S17 | O | Fluorescent indicator tube segment output. |
| 63 | NC | – | Not used. |
| 64 | NC | – | Not used. |
| 65 | NC | – | Not used. |
| 66 | G5 | O | Fluorescent indicator tube grid output. |
| 67 | G4 | O | Fluorescent indicator tube grid output. |
| 68 | G3 | O | Fluorescent indicator tube grid output. |
| 69 | G2 | O | Fluorescent indicator tube grid output. |
| 70 | G1 | O | Fluorescent indicator tube grid output. |
| 71 | V-DISP | – | Fluorescent indicator tube power supply. ( – 20V) |
| 72 | $V_{DD}$ | – | Power supply. (+5V) |
| 73 | NC | – | Not used. |
| 74 | NC | – | Not used. |
| 75 | $V_{DD}$ | – | Power supply. (+5V) |
| 76 | POWER IN | I | 0V= Power OFF |
| 77 | POWER OUT | O | Power ON/OFF. ON=0V |
| 78 | $V_{DD}$ | – | Power supply. (+5V) |
| 79 | TEST MODE | I | Test mode selector. 0V= Test mode |
| 80 | VERSION 1 | I | Version slector. |

## SECTION 5
## DIAGRAMS

### • SEMICONDUCTOR LOCATION

| Ref. No. | Location | Ref. No. | Location | |
|---|---|---|---|---|
| D131 | D-11 | IC511 | F-16 | |
| D132 | D-11 | IC601 | B-9 | |
| D231 | D-11 | IC701 | G-10 | |
| D232 | D-12 | IC801 | C-8 | |
| D511 | B-13 | IC802 | E-8 | |
| D512 | B-13 | | | |
| D513 | F-13 | Q101 | B-14 | |
| D551 | B-11 | Q102 | C-14 | |
| D701 | H-8 | Q121 | G-12 | |
| D702 | H-8 | Q122 | D-13 | |
| | | Q201 | A-14 | |
| D703 | G-8 | | | |
| D704 | G-8 | Q202 | C-16 | |
| D705 | G-8 | Q221 | G-12 | |
| D706 | G-8 | Q222 | E-13 | |
| D707 | G-8 | Q503 | G-14 | |
| | | Q504 | G-14 | |
| D708 | H-9 | | | |
| D709 | H-11 | Q505 | F-14 | |
| D710 | G-9 | Q511 | C-13 | |
| D711 | G-10 | Q512 | C-13 | |
| D712 | F-9 | Q521 | G-14 | |
| | | Q531 | C-11 | |
| D713 | G-7 | | | |
| D714 | F-9 | Q532 | C-11 | |
| D715 | G-10 | Q551 | B-11 | |
| D801 | E-8 | Q572 | F-13 | |
| D802 | E-8 | Q573 | D-13 | |
| | | Q601 | C-10 | |
| IC501 | D-15 | Q701 | H-12 | |
| IC502 | G-15 | Q702 | H-11 | |
| IC503 | D-13 | Q703 | H-9 | |
| IC504 | D-11 | Q704 | H-10 | |
| IC505 | D-11 | Q705 | G-10 | |
| IC506 | B-15 | Q706 | G-9 | |
| IC507 | C-13 | Q707 | F-9 | |
| IC508 | B-10 | Q708 | F-8 | |
| IC509 | D-10 | Q803 | B-7 | |
| IC510 | C-12 | Q805 | E-8 | |

**Note:**

- ○— : parts extracted from the component side.
- △ : internal component.
- ▒ : Pattern from the side which enables seeing. (The other layers' patterns are not indicated)

**Caution :**

Pattern face side : Parts on the pattern face side seen from
(Conductor Side) the pattern face are indicated.
Parts face side : Parts on the parts face side seen from the
(Component side) parts face are indicated.

• Abbreviation
CND : Canadian

5-1. PRINTED WIRING BOARDS – MAIN SECTION – (TC-KE200/KE300/RX300) • Refer to page 28 for Circuit Boards Location.

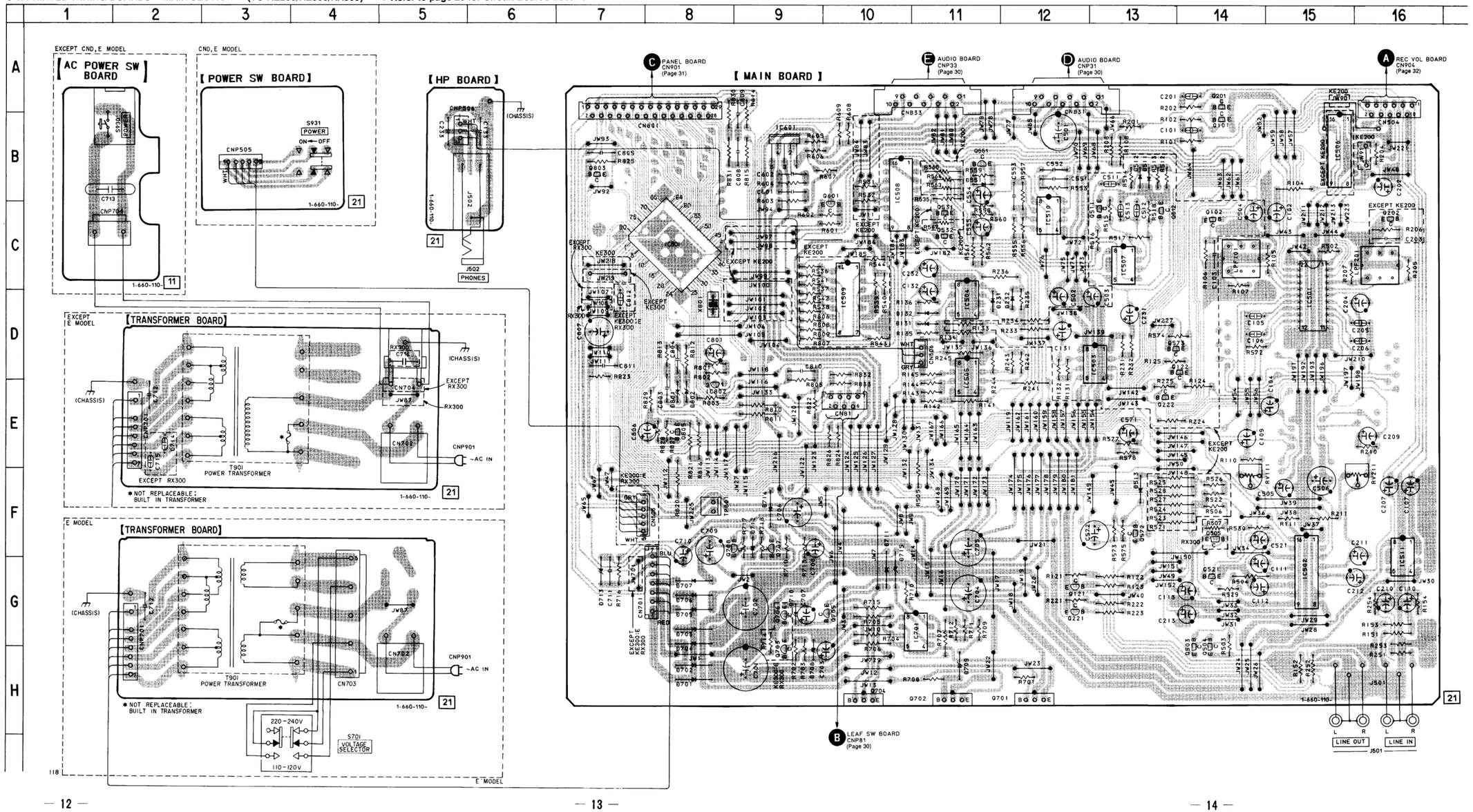

## 5-2. SCHEMATIC DIAGRAM – MAIN SECTION – (TC-KE200/KE300/RX300)

● Refer to page 28 for IC Block Diagram.

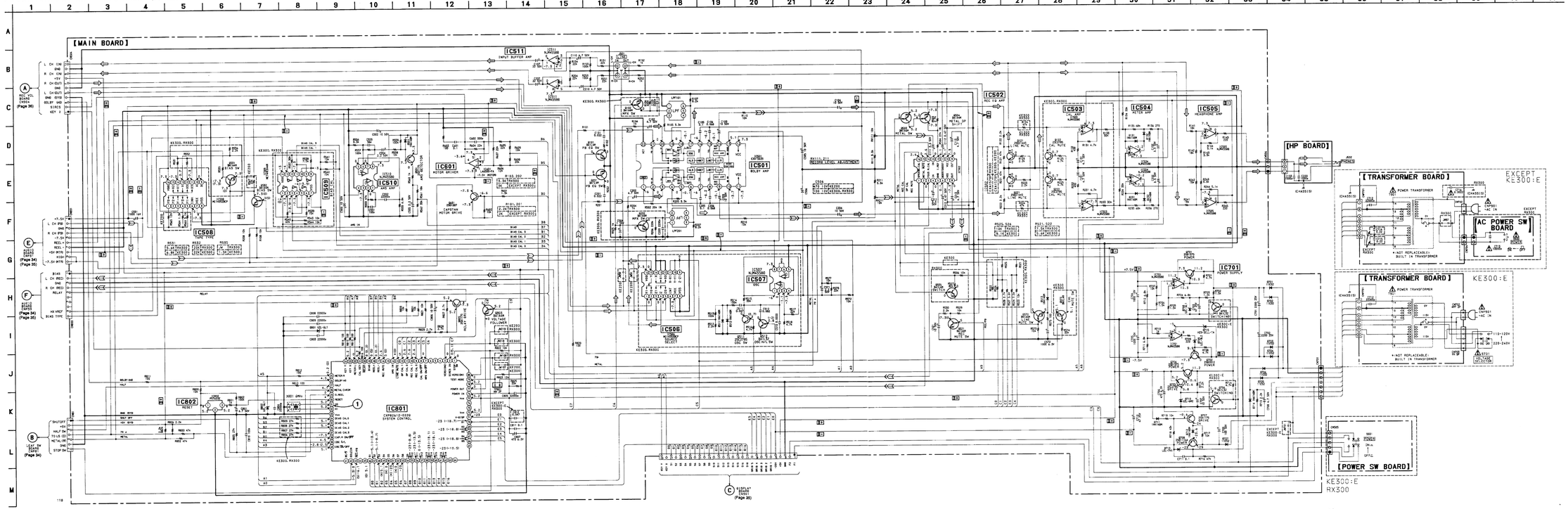


● WAVEFORM

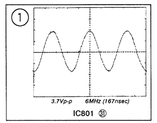


**Note :**

- All capacitors are in μ F unless otherwise noted. pF: μ μ F 50WV or less are not indicated except for electrolytics and tantalums.
- All resistors are in Ω and ¼W or less unless otherwise specified.
- % : indicates tolerance.
- △ : internal component.
- ▭ : panel designation.
- B+ : B+ Line
- B− : B − Line
- ▭ : adjustment for repair.
- Voltage and waveforms are dc with respect to ground under no-signal conditions.
  no mark : PLAYBACK
  ( ) : REC
  ✱ : can not be measured.
- Voltages are taken with a VOM ( Input impedance 10M Ω ). Voltage variations may be noted due to normal production tolerances.
- Waveforms are taken with a oscilloscope. Voltage variations may be noted due to normal production tolerances.
- Circled numbers refer to waveforms.
- Signal path.
  ⇨ : LINE
  ⇨ : PB
  ⇨ : REC
- Abbreviation
  GND : Canadian

5-3. SCHEMATIC DIAGRAM – MAIN SECTION – (TC-KE400S) ● Refer to page 28 for IC Block Diagram.

● WAVEFORM

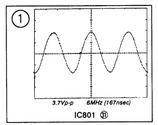


Note :

- All capacitors are in μ F unless otherwise noted. pF: μ μ F 50WV or less are not indicated except for electrolytics and tantaliums.
- All resistors are in Ω and ¼W or less unless otherwise specified.
- % : indicates tolerance.
- △ : internal component.
- ▭ : panel designation.
- B+ : B+ Line
- B− : B − Line
- ▭ : adjustment for repair.
- Voltage and waveforms are dc with respect to ground under no-signal conditions.
  no mark : PLAYBACK
  ( ) : REC
  ＊ : can not be measured.
- Voltages are taken with a VOM ( Input impedance 10M Ω ). Voltage variations may be noted due to normal production tolerances.
- Waveforms are taken with a oscilloscope. Voltage variations may be noted due to normal production tolerances.
- Circled numbers refer to waveforms.
- Signal path.
  ⇨ : LINE
  ⇦ : PB
  ⇨⇦ : REC

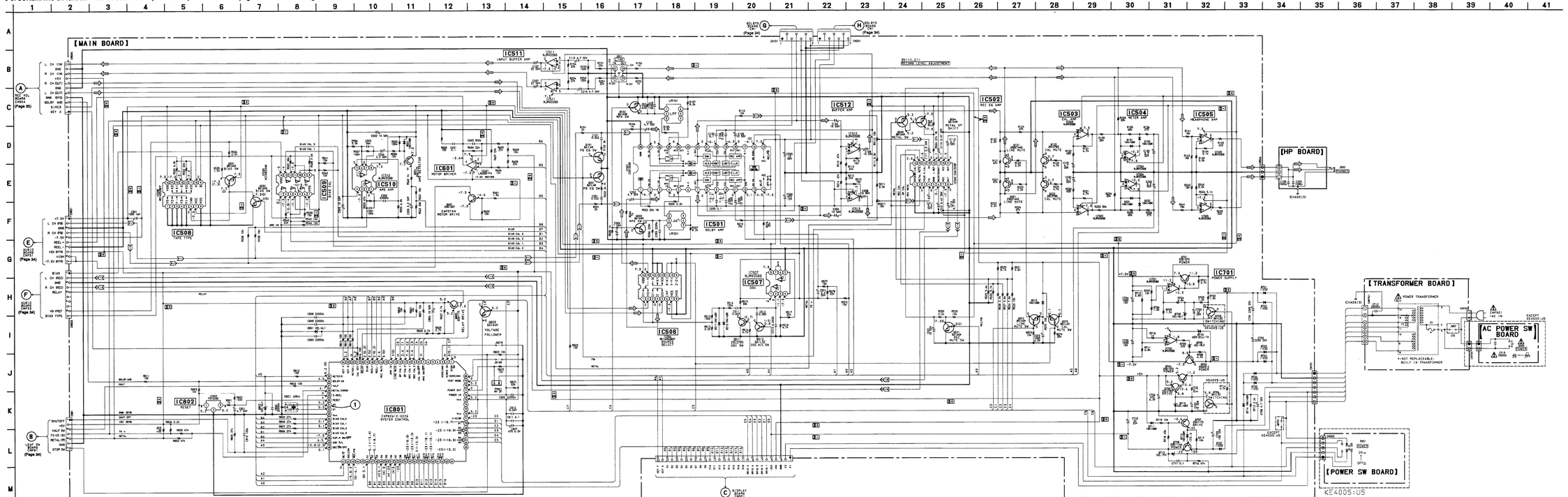

## 5-4. PRINTED WIRING BOARDS – MAIN SECTION – (TC-KE400S)

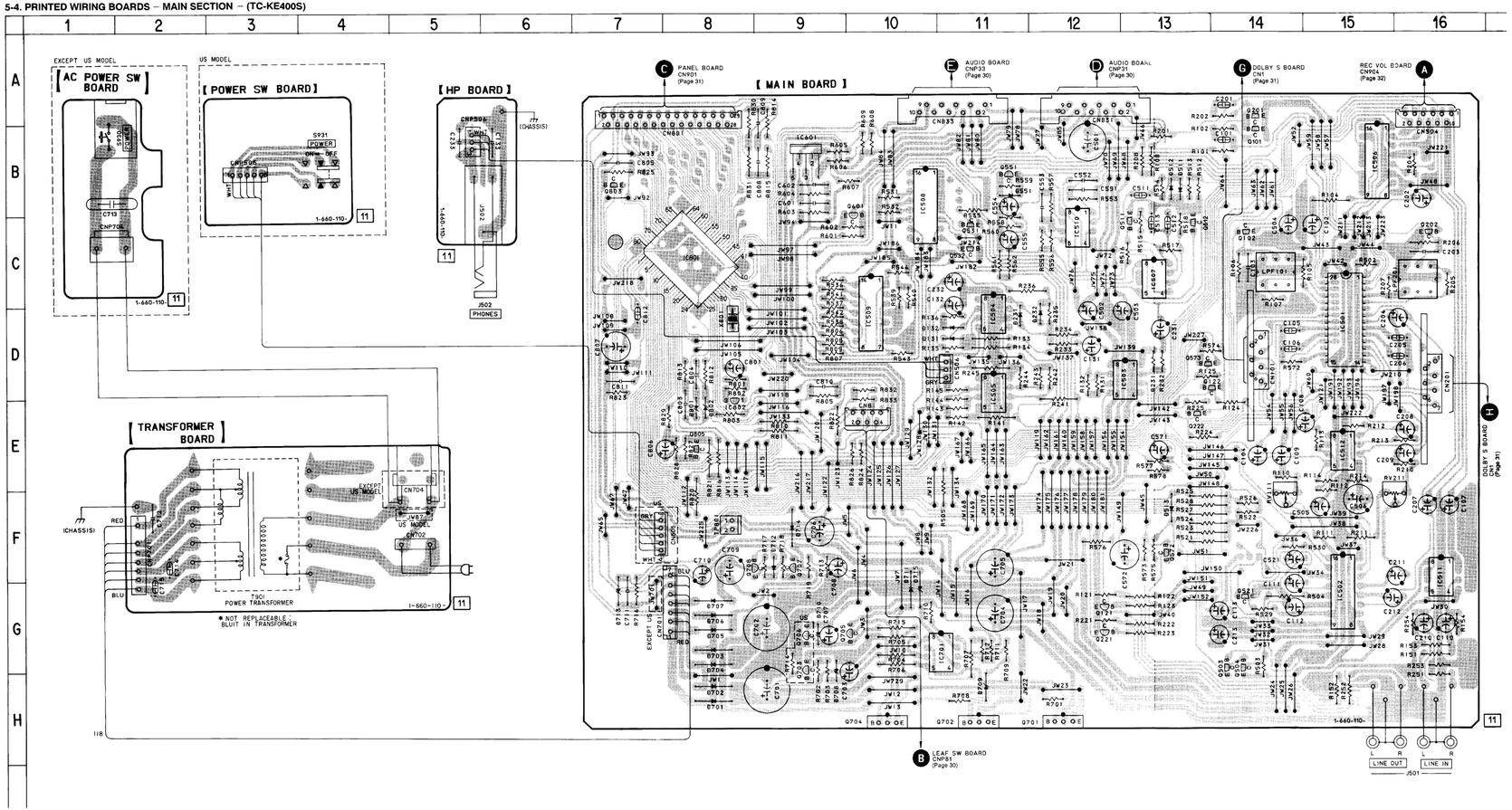


### ● SEMICONDUCTOR LOCATION

| Ref. No. | Location | Ref. No. | Location |
|---|---|---|---|
| D131 | D - 11 | IC512 | E - 15 |
| D132 | D - 11 | IC601 | B - 9 |
| D231 | D - 11 | IC701 | G - 11 |
| D232 | D - 12 | IC801 | C - 8 |
| D511 | B - 13 | IC802 | E - 8 |
| D512 | B - 13 | | |
| D513 | F - 13 | Q101 | B - 14 |
| D551 | B - 11 | Q102 | C - 14 |
| D701 | H - 8 | Q121 | G - 12 |
| D702 | H - 8 | Q122 | D - 13 |
| | | Q201 | A - 14 |
| D703 | G - 8 | | |
| D704 | G - 8 | Q202 | C - 16 |
| D705 | G - 8 | Q221 | G - 12 |
| D706 | G - 8 | Q222 | E - 13 |
| D707 | G - 8 | Q503 | G - 14 |
| | | Q504 | G - 14 |
| D708 | H - 9 | | |
| D709 | H - 11 | Q505 | |
| D710 | G - 9 | Q511 | C - 13 |
| D711 | G - 10 | Q512 | C - 13 |
| D712 | F - 9 | Q521 | G - 14 |
| | | Q531 | C - 11 |
| D713 | G - 7 | | |
| D714 | F - 9 | Q532 | C - 11 |
| D715 | G - 10 | Q551 | B - 11 |
| D801 | E - 8 | Q572 | F - 13 |
| D802 | E - 8 | Q573 | D - 13 |
| | | Q601 | B - 10 |
| IC501 | D - 15 | Q701 | H - 12 |
| IC502 | G - 15 | Q702 | H - 11 |
| IC503 | D - 13 | Q703 | G - 9 |
| IC504 | D - 11 | Q704 | H - 10 |
| IC505 | D - 11 | Q705 | G - 10 |
| IC506 | B - 15 | Q706 | G - 9 |
| IC507 | C - 13 | Q707 | F - 9 |
| IC508 | B - 10 | Q708 | F - 8 |
| IC509 | D - 10 | Q803 | B - 7 |
| IC510 | C - 12 | Q805 | E - 8 |
| IC511 | F - 16 | | |

**Note:**

- ○— : parts extracted from the component side.
- △ : internal component.
- ▒ : Pattern from the side which enables seeing. (The other layers' patterns are not indicated)

**Caution :**

Pattern face side : (Conductor Side) Parts on the pattern face side seen from the pattern face are indicated.
Parts face side : (Component side) Parts on the parts face side seen from the parts face are indicated.

## 5-5. CIRCUIT BOARDS LOCATION

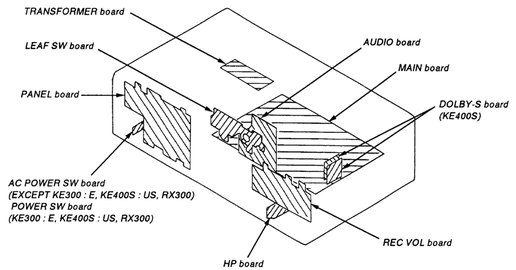


### ● IC BLOCK DIAGRAM

**IC502 CXA1579P (EXCEPT TC-RX300)**
**IC502 CXA1578P (TC-RX300 only)**

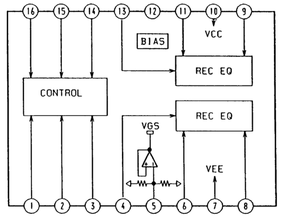

## 5-6. PRINTED WIRING BOARDS – AUDIO SECTION –

### • SEMICONDUCTOR LOCATION

| Ref. No. | Location |
|---|---|
| D31 | H - 1 |
| IC1 | I - 2 |
| IC81 | H - 7 (LEAF SW BOARD) |
| Q51 | H - 2 |
| Q52 | G - 2 |
| Q53 | H - 2 |
| Q71 | H - 3 |

### • SEMICONDUCTOR LOCATION

| Ref. No. | Location |
|---|---|
| D31 | C - 1 |
| IC1 | G - 16 (KE400S) |
| IC31 | C - 2 |
| IC81 | B - 3 (AUDIO BOARD) |
| IC81 | H - 7 (LEAF SW BOARD) |
| IC901 | B - 23 (KE400S) |
| IC901 | G - 23 (KE200/KE300/RX300) |
| Q51 | B - 2 |
| Q52 | B - 2 |
| Q53 | B - 1 |
| Q71 | C - 3 |

**Note:**

- O— : parts extracted from the component side.
- ▒▒▒ : Pattern from the side which enables seeing. (The other layers' patterns are not indicated)

**Caution :**

Pattern face side : (Conductor Side) Parts on the pattern face side seen from the pattern face are indicated.
Parts face side : (Component side) Parts on the parts face side seen from the parts face are indicated.

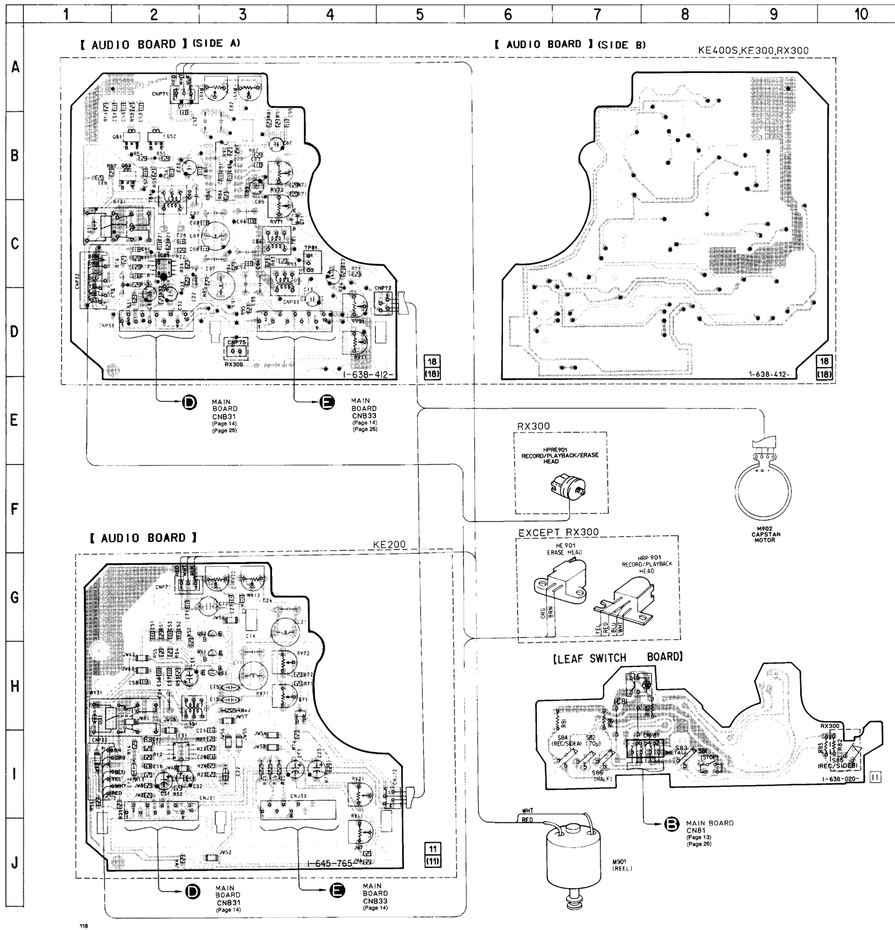


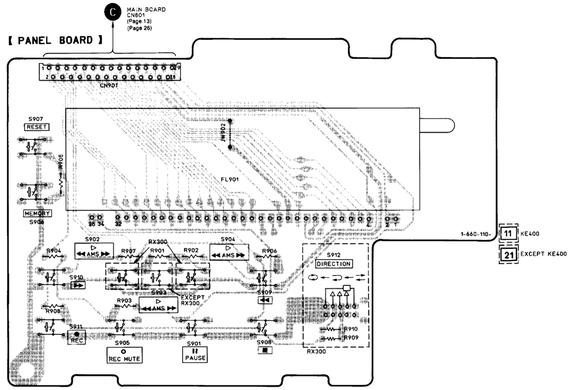


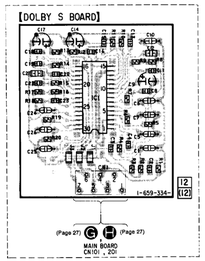


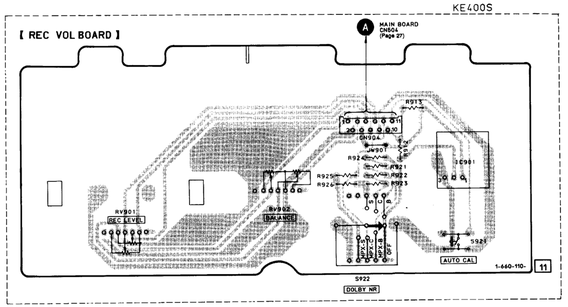


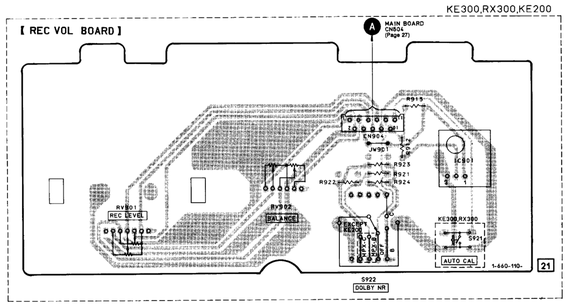

## 5-7. SCHEMATIC DIAGRAM – AUDIO SECTION –

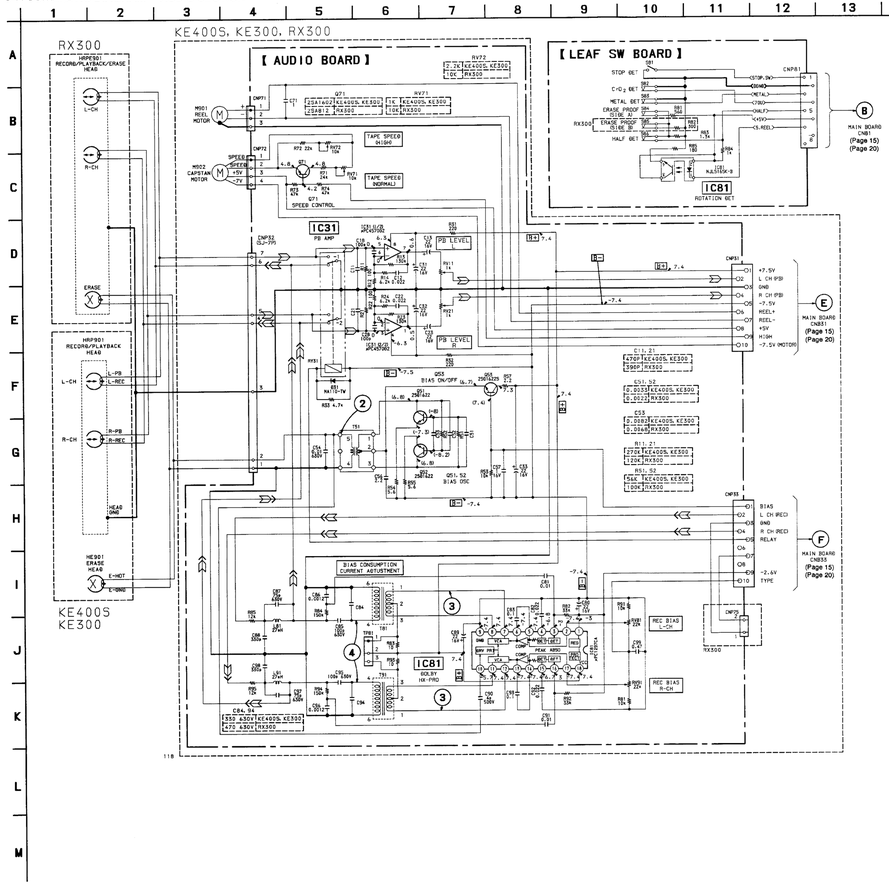


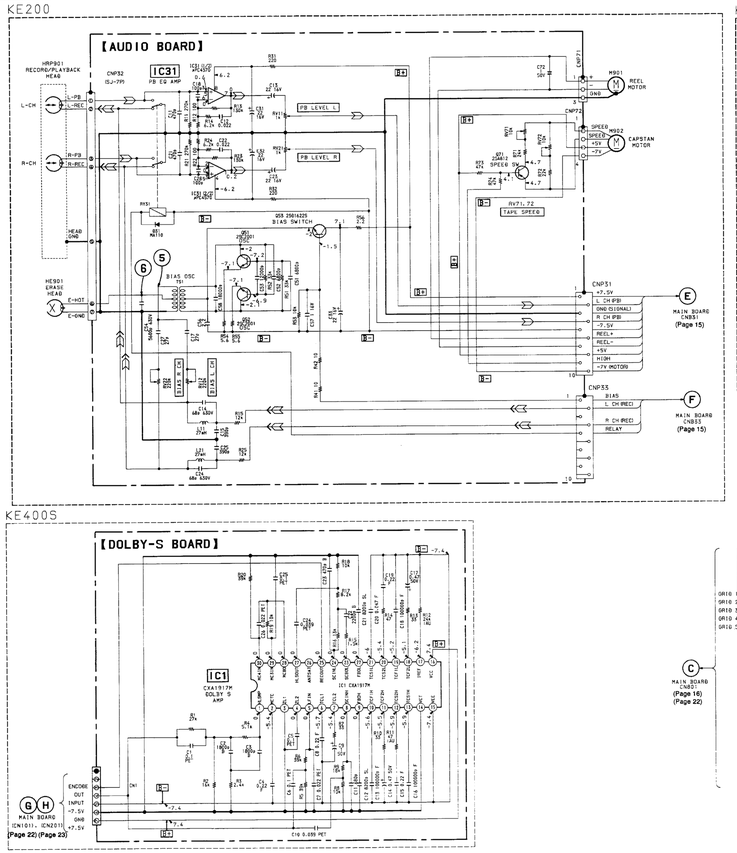


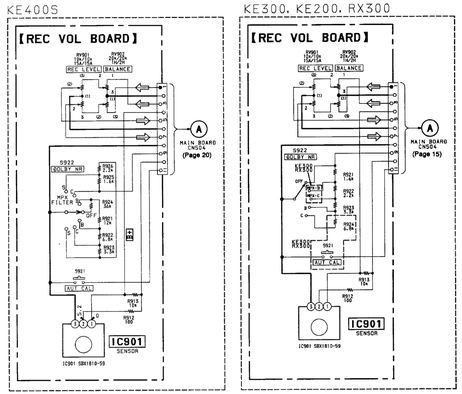


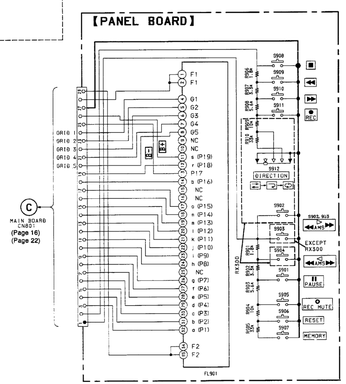


● WAVEFORMS

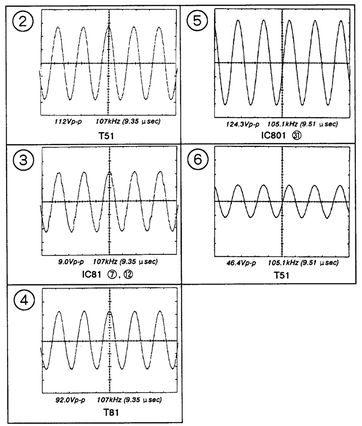


**Note :**

- All capacitors are in μ F unless otherwise noted. pF: μ μ F 50WV or less are not indicated except for electrolytics and tantalums.
- All resistors are in Ω and ¼W or less unless otherwise specified.
- ▭ : panel designation.

| Note : | Note : |
|---|---|
| The components identified by mark ⚠ or dotted line with mark ⚠ are critical for safety. Replace only with part number specified. | Les composants identifiés par une marque ⚠ sont critiques pour la sécurité. Ne les remplacer que par une pièce portant le numéro spécifié. |

- B+ : B+ Line
- B− : B − Line
- ▭ : adjustment for repair.
- Voltage and waveforms are dc with respect to ground under no-signal conditions.
- Voltages are taken with a VOM ( Input impedance 10M Ω ). Voltage variations may be noted due to normal production tolerances.
- Waveforms are taken with a oscilloscope. Voltage variations may be noted due to normal production tolerances.
- Circled numbers refer to waveforms.
- Signal path.
  ▷ : PB
  ▷▷ : REC

# SECTION 6
# EXPLODED VIEWS

**NOTE :**

- -XX, -X mean standardized parts, so they may have some difference from the original one.
- Items marked " * "are not stocked since they are seldom required for routine service. Some delay should be anticipated when ordering these items.
- Color indication of Appearance Parts
  Example :
  KNOB, BALANCE (WHITE) ••• (RED)
  ↑ Parts color ↑ Cabinet's color

- The mechanical parts with no reference number in the exploded views are not supplied.
- Hardware (# mark) list and accessories and packing materials are given in the last of this parts list.
- Abbreviation

| | | | |
|---|---|---|---|
| CND | : Canadian | SP | : Singapore |
| AUS | : Australian | MY | : Malaysia |
| G | : German | | |

The components identified by mark ⚠ or dotted line with mark ⚠ are critical for safety.
Replace only with part number specified.

Les composants identifiés par une marque ⚠ sont critiques pour la sécurité.
Ne les remplacer que par une pièce portant le numéro spécifié.

## 6-1. CHASSIS SECTION

▲A :TRANS board

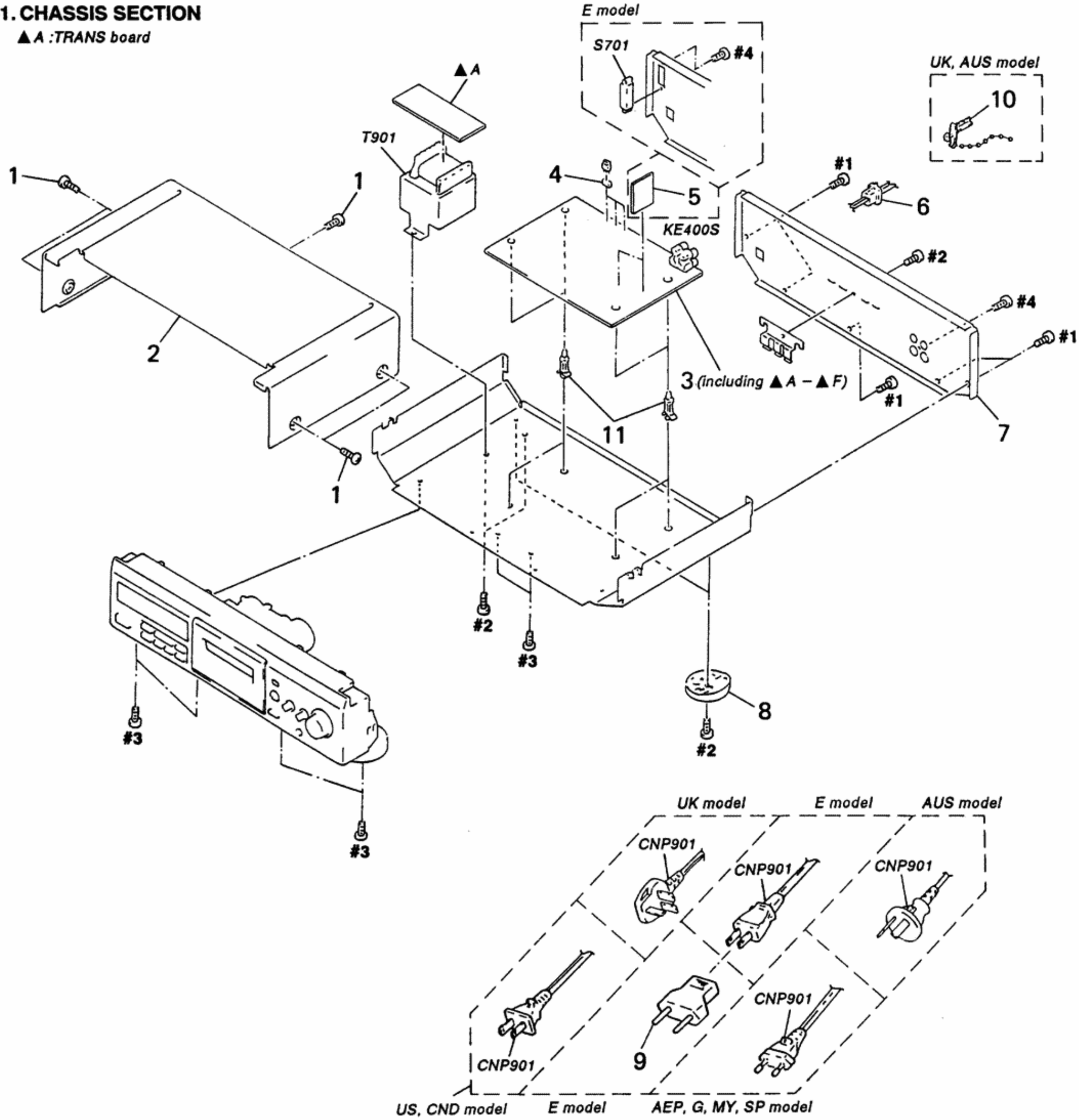

| Ref. No. | Part No. | Description | Remark |
|---|---|---|---|
| 1 | 3-704-366-01 | SCREW (CASE) (M3X8)...(BLACK) | |
| 1 | 3-704-366-71 | SCREW (CASE) (M3X8)...(SILVER) (KE400S) | |
| * 2 | 3-931-432-01 | CASE (410726)...(BLACK) | |
| * 2 | 3-931-432-21 | CASE (410726)...(SILVER) (KE400S) | |
| * 3 | A-2007-523-A | MAIN BOARD, COMPLETE (KE200) | |
| * 3 | A-2007-524-A | MAIN BOARD, COMPLETE (KE400S:EXCEPT US) | |
| * 3 | A-2007-525-A | MAIN BOARD, COMPLETE (KE400S:US) | |
| * 3 | A-2007-526-A | MAIN BOARD, COMPLETE (KE300:EXCEPT E) | |
| * 3 | A-2007-527-A | MAIN BOARD, COMPLETE (KE300:E) | |
| * 3 | A-2007-591-A | MAIN BOARD, COMPLETE (RX300) | |
| * 4 | 3-923-762-11 | HOLDER (TR) | |
| * 5 | A-2007-481-A | DOLBY-S BOARD, COMPLETE (KE400S) | |
| * 6 | 3-703-244-00 | BUSHING (2104), CORD (EXCEPT US,E,CND) | |
| 6 | 3-703-571-11 | BUSHING (S) (4516), CORD (US,E,CND) | |
| * 7 | 3-933-281-01 | PANEL, BACK (KE400S:US) | |
| * 7 | 3-933-281-12 | PANEL, BACK (KE400S:AEP,G) | |
| * 7 | 3-933-281-21 | PANEL, BACK (KE400S:UK) | |
| * 7 | 3-933-281-31 | PANEL, BACK (KE400S:AUS) | |
| * 7 | 3-933-281-41 | PANEL, BACK (KE300:AEP,G,MY,SP) | |
| * 7 | 3-933-281-51 | PANEL, BACK (KE300:AUS) | |
| * 7 | 3-933-281-61 | PANEL, BACK (KE300:E) | |
| * 7 | 3-933-281-81 | PANEL, BACK (RX300) | |

| Ref. No. | Part No. | Description | Remark |
|---|---|---|---|
| * 7 | 3-933-307-01 | PANEL, BACK (KE200:AEP,G) | |
| * 7 | 3-933-307-11 | PANEL, BACK (KE200:UK) | |
| 8 | X-4947-207-1 | FOOT ASSY (F50150S) (EXCEPT US,CND) | |
| 8 | X-4947-208-1 | FOOT ASSY (F50150S) (US,CND) | |
| ⚠9 | 1-569-007-11 | ADAPTER, CONVERSION 2P (E) | |
| 10 | 4-956-370-12 | BAND, PLUG FIXED (UK,AUS) | |
| * 11 | 3-346-265-31 | HOLDER, PC BOARD | |
| ⚠CNP901 | 1-558-945-21 | CORD, POWER (POLAR.SPT-1) (US,CND) | |
| ⚠CNP901 | 1-575-651-21 | CORD, POWER (AEP,G,MY,SP) | |
| ⚠CNP901 | 1-696-027-11 | CORD, POWER (E) | |
| ⚠CNP901 | 1-696-586-11 | CORD, POWER (UK) | |
| ⚠CNP901 | 1-696-845-11 | CORD, POWER (AUS) | |
| ⚠CNP901 | 1-751-523-11 | CORD, POWER (UK) | |
| ⚠S701 | 1-570-046-21 | SWITCH, VOLTAGE CHANGE (E) | |
| ⚠T901 | 1-426-651-11 | TRANSFORMER, POWER | (KE200,KE300:EXCEPT E) |
| ⚠T901 | 1-426-652-11 | TRANSFORMER, POWER (KE300:E) | |
| ⚠T901 | 1-427-743-11 | TRANSFORMER, POWER (RX300) | |
| ⚠T901 | 1-427-751-11 | TRANSFORMER, POWER (KE400S:EXCEPT US) | |
| ⚠T901 | 1-427-752-11 | TRANSFORMER, POWER (KE400S:US) | |

## 6-2. FRONT PANEL SECTION

▲B : PANEL board
▲C : POWER SW board (US, CND, E)
▲D : REC VOL board
▲E : HP board
▲F : AC POWER SW board (EXCEPT US, CND, E)

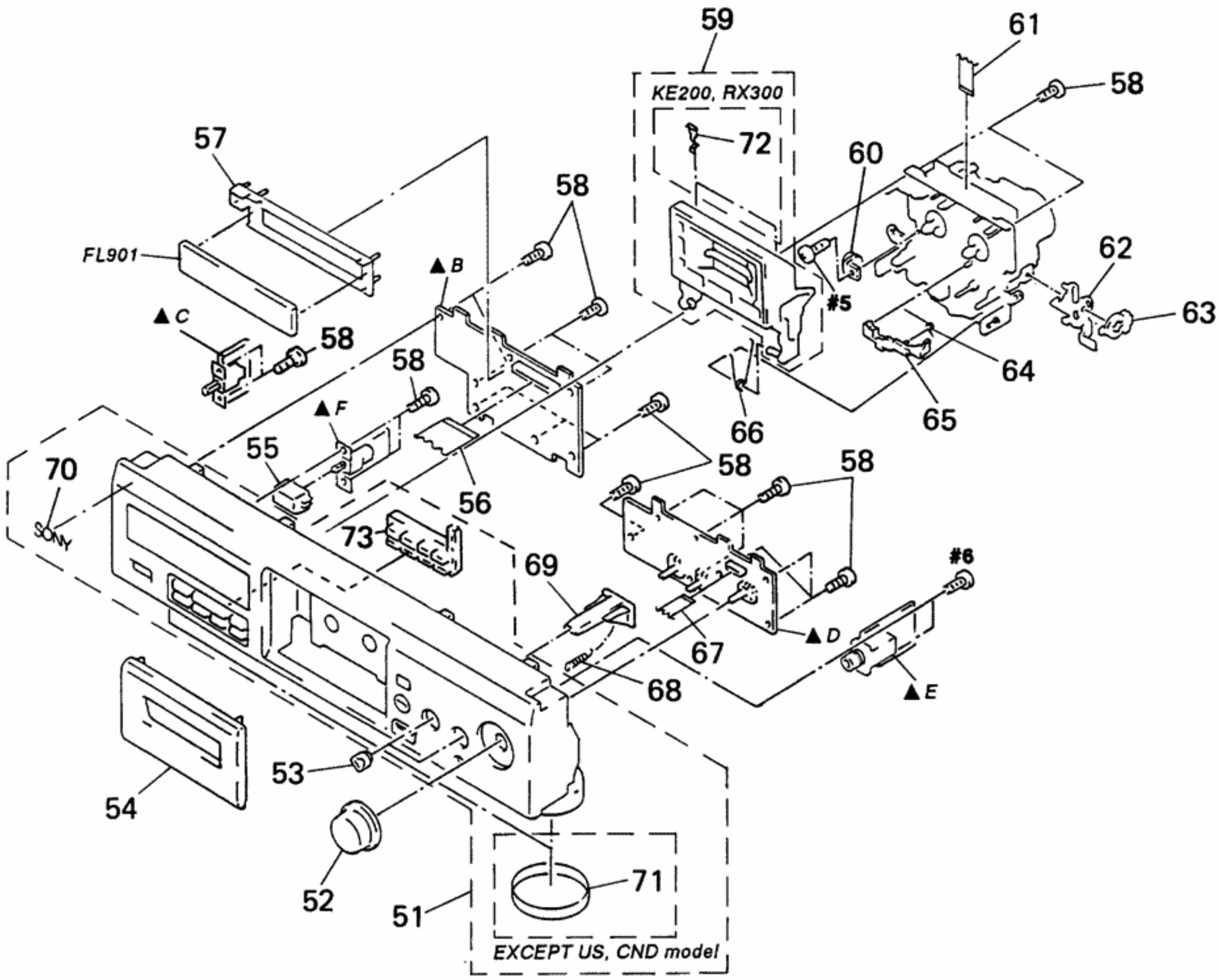


| Ref. No. | Part No. | Description | Remark |
|---|---|---|---|
| 51 | X-3371-687-1 | PANEL ASSY, FRONT...(SILVER) (KE400S) | |
| 51 | X-3371-687-2 | PANEL ASSY, FRONT...(BLACK) (KE400S: EXCEPT US) | |
| 51 | X-3371-688-2 | PANEL ASSY, FRONT...(BLACK) (KE300) | |
| 51 | X-3371-690-2 | PANEL ASSY, FRONT...(BLACK) (KE200) | |
| 51 | X-3371-694-2 | PANEL ASSY, FRONT...(BLACK) (KE400S: US) | |
| 51 | X-3371-696-2 | PANEL ASSY, FRONT...(BLACK) (RX300) | |
| 52 | 3-939-300-11 | KNOB (REC)...(BLACK) | |
| 52 | 3-939-300-21 | KNOB (REC)...(SILVER) (KE400S) | |
| 53 | 3-933-299-01 | KNOB (DIA. 12)...(BLACK) | |
| 53 | 3-933-299-11 | KNOB (DIA. 12)...(SILVER) (KE400S) | |
| 54 | X-3371-686-1 | LID ASSY, CASSETTE...(SILVER) (KE400S) | |
| 54 | X-3371-691-2 | LID ASSY, CASSETTE...(BLACK) (KE400S,KE300) | |
| 54 | X-3371-692-2 | LID ASSY, CASSETTE...(BLACK) (RX300) | |
| 54 | X-3371-693-2 | LID ASSY, CASSETTE...(BLACK) (KE200) | |
| 55 | 3-931-429-01 | BUTTON (POWER) | |
| 56 | 1-773-287-11 | WIRE (FLAT TYPE) (29 CORE) | |
| * 57 | 3-377-337-11 | HOLDER (FL) | |
| 58 | 4-951-620-01 | SCREW (2.6X8), +BVTP | |
| 59 | A-4325-164-A | HOLDER (R) ASSY, CASSETTE (KE200,RX300) | |
| 59 | X-3368-119-1 | HOLDER (R) ASSY, CASSETTE (KE300,KE400S) | |
| 60 | 3-354-963-01 | DAMPER | |

| Ref. No. | Part No. | Description | Remark |
|---|---|---|---|
| 61 | 1-765-318-11 | WIRE (FLAT TYPE) (7 CORE) | |
| * 62 | 3-354-954-01 | LEVER (LOCK LEVER R) | |
| 63 | 3-354-957-01 | JOINT (LOCK LEVER) | |
| 64 | 3-354-962-01 | SPRING (EJ SAFTY SPRING R) | |
| 65 | 3-354-956-01 | LEVER (EJ SAFTY LEVER R) | |
| 66 | 3-354-960-01 | SPRING (LOADING R), TORSION | |
| 67 | 1-769-947-11 | WIRE (FLAT TYPE) (11 CORE) | |
| 68 | 3-937-169-01 | SPRING, TENSION | |
| 69 | 3-933-295-01 | BUTTON (EJECT) | |
| 70 | 4-963-404-21 | EMBLEM (5-A), SONY | |
| 71 | 4-977-593-11 | RING (DIA 50), ORNAMENTAL (EXCEPT US,CND) | |
| 72 | 3-308-823-11 | DETENT, CASSETTE (KE200,RX300) | |
| 73 | 3-933-293-01 | BUTTON (FWD) (EXCEPT RX300) | |
| 73 | 3-933-294-01 | BUTTON (REV) (RX300) | |
| FL901 | 1-517-173-11 | INDICATOR TUBE, FLUORESCENT (KE200,KE300,RX300) | |
| FL901 | 1-517-374-11 | INDICATOR TUBE, FLUORESCENT (KE400S) | |

## 6-3. MECHANISM SECTION 1
**TC-KE200 : TCM-190VB22CS**
**TC-KE300/KE400S : TCM-190VB12CS**
**TC-RX300 : TCM-190RB12C**

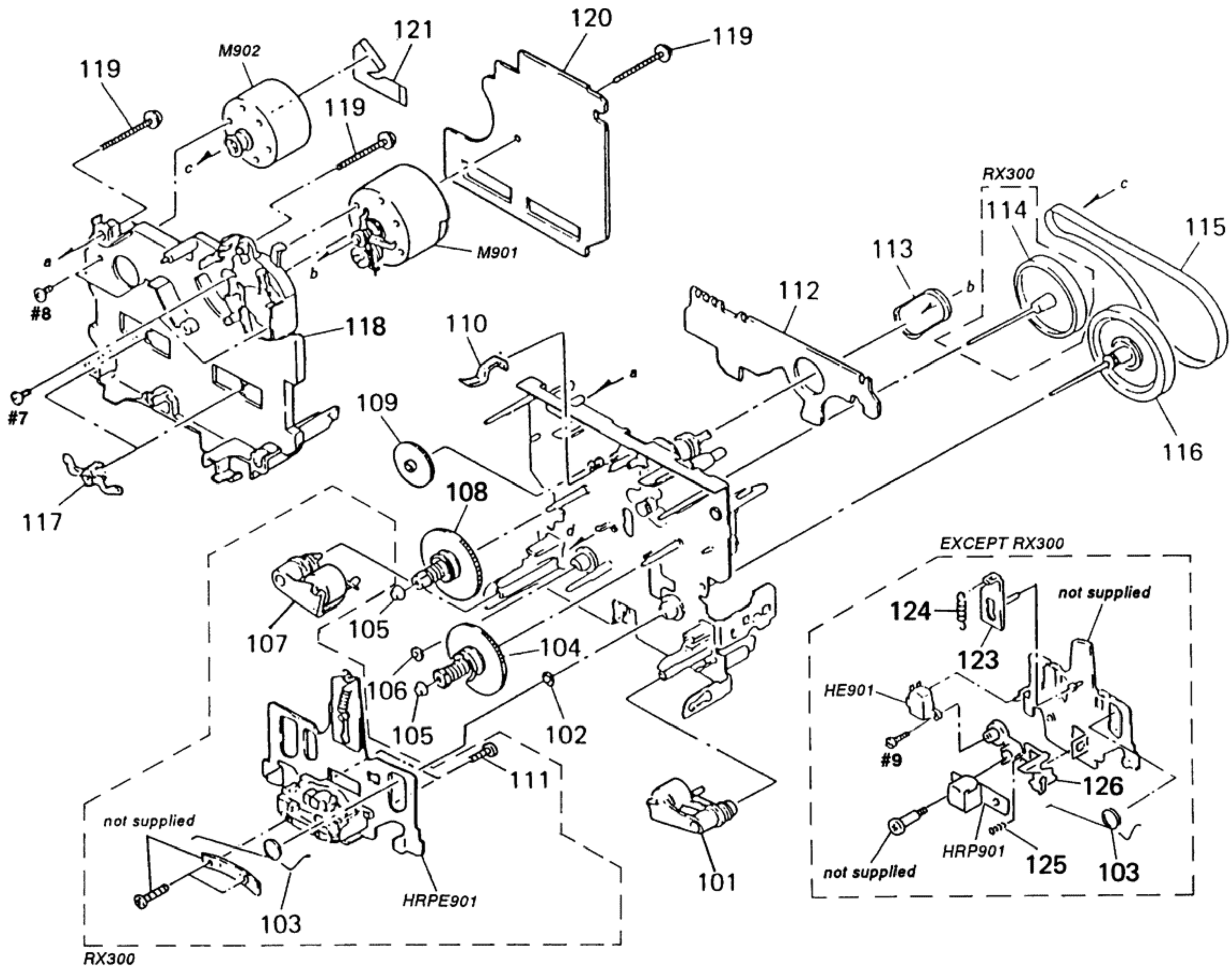


| Ref. No. | Part No. | Description | Remark |
|---|---|---|---|
| 101 | X-3366-047-1 | LEVER (PINCH F) ASSY | |
| 102 | 3-356-713-01 | WASHER | |
| 103 | 3-907-362-01 | SPRING, TORSION | |
| 104 | X-3366-970-1 | TABLE ASSY, REEL | |
| 105 | 3-362-308-01 | CAP (REEL) | |
| 106 | 3-356-714-01 | WASHER (RX300) | |
| 107 | X-3366-048-1 | LEVER (PINCH R) ASSY (RX300) | |
| 108 | X-3366-971-1 | TABLE ASSY (B), REEL | |
| 109 | 3-359-424-01 | GEAR (REV GEAR) | |
| 110 | 3-359-430-01 | SPRING(CASSETTE RETAINER),LEAF | |
| 111 | 3-388-848-01 | SCREW (P2X6) (B TIGHT)(RX300) | |
| * 112 | 1-638-020-11 | LEAF SW BOARD | |
| 113 | 3-359-466-01 | BELT (FR), SQUARE | |
| 114 | X-3367-630-1 | FLYWHEEL (REV) ASSY (RX300) | |
| 115 | 3-359-417-01 | BELT (FLAT), CAPSTAN (RX300) | |
| 115 | 3-359-467-01 | BELT (1 WAY FLAT BELT) (EXCEPT RX300) | |
| 116 | X-3367-629-1 | FLYWHEEL (1WD) ASSY | |
| 117 | 3-575-321-00 | RETAINER, THRUST, CAPSTAN | |

| Ref. No. | Part No. | Description | Remark |
|---|---|---|---|
| 118 | 3-359-436-11 | BASE (THRUST RETAINER),FITTING | |
| 119 | 3-359-414-01 | SCREW (+PTPWH 2X23) | |
| * 120 | A-2006-890-A | AUDIO BOARD, COMPLETE (KE400S,KE300) | |
| * 120 | A-2007-040-A | AUDIO BOARD, COMPLETE (RX300) | |
| * 120 | A-2007-171-A | AUDIO BOARD, COMPLETE (KE200) | |
| 121 | 1-638-983-11 | MOTOR FLEXIBLE BOARD | |
| * 123 | X-3368-865-1 | SLIDER (LIMITER) ASSY (EXCEPT RX300) | |
| 124 | 3-363-868-01 | SPRING (HEAD CHASSIS), TENSION | (EXCEPT RX300) |
| 125 | 3-343-484-01 | SPRING, COMPRESSION (EXCEPT RX300) | |
| * 126 | 3-359-445-11 | HOLDER (1 WAY HEAD)(EXCEPT RX300) | |
| HE901 | 1-543-673-11 | HEAD, MAGNETIC (ERASE)(EXCEPT RX300) | |
| HRP901 | 1-543-919-11 | HEAD,MAGNETIC(RECORD/PLAYBACK) | (EXCEPT RX300) |
| HRPE901 | A-2004-527-A | DECK ASSY, HEAD (RECORD/PLAYBACK/ERASE) | (RX300) |
| M901 | X-3363-501-1 | MOTOR ASSY,REEL (REEL) | |
| M902 | X-3365-377-2 | MOTOR ASSY,CAPSTAN (CAPSTAN) | |

## 6-4. MECHANISM SECTION 2
**TC-KE200 : TCM-190VB22CS**
**TC-KE300/KE400S : TCM-190VB12CS**
**TC-RX300 : TCM-190RB12C**

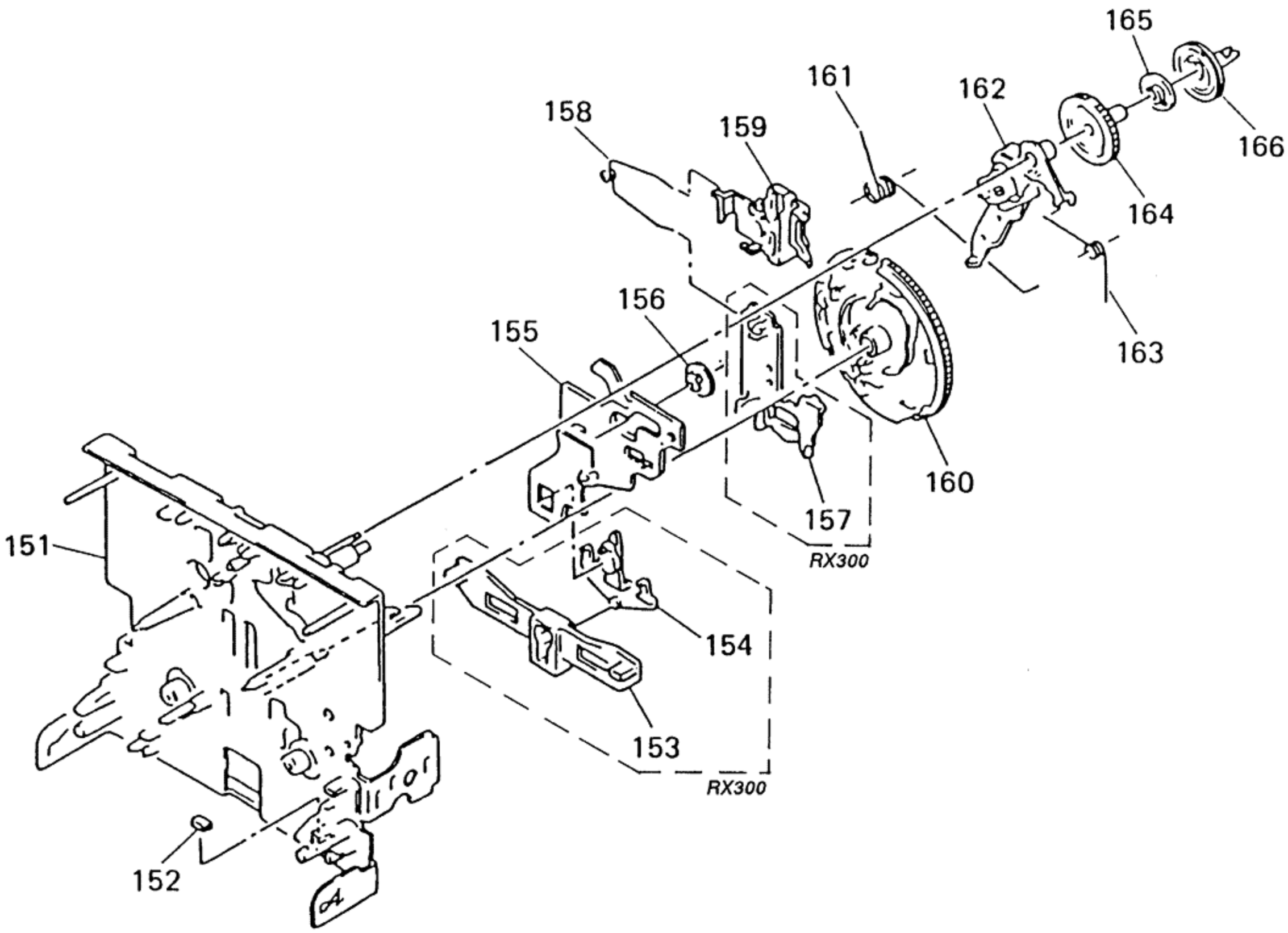


| Ref. No. | Part No. | Description | Remark |
|---|---|---|---|
| 151 | X-3359-415-1 | CHASSIS ASSY, MECHANICAL | |
| 152 | 3-359-469-01 | SPACER | |
| 153 | 3-359-425-01 | SLIDER (REVERSE SLIDER)(RX300) | |
| 154 | 3-359-426-01 | LEVER (REVERSE LEVER)(RX300) | |
| * 155 | 3-359-415-01 | SLIDER (TRIGGER SLIDER) | |
| 156 | 3-359-448-01 | GEAR (TRIGGER) | |
| 157 | 3-359-427-01 | SLIDER (LEVERSE SLIDER)(RX300) | |
| 158 | 3-359-454-01 | SPRING, TORSION | |
| 159 | 3-359-429-01 | SLIDER (BRAKE PLATE) | |

| Ref. No. | Part No. | Description | Remark |
|---|---|---|---|
| 160 | 3-359-420-01 | GEAR (CAM GEAR)(KE200) | |
| 160 | 3-936-483-01 | GEAR (CAM GEAR)(EXCEPT KE200) | |
| 161 | 3-359-456-01 | SPRING(TRIGGER SPRING),TORSION | |
| 162 | X-3366-569-1 | ARM ASSY, FR | |
| 163 | 3-924,187-11 | S+RING (FR ARM), TORSION | |
| 164 | 3-359-419-11 | GEAR (FR GEAR) | |
| 165 | 3-359-421-01 | CLUTCH (REEL DISK) | |
| 166 | 3-359-418-01 | PULLEY (FR PULLEY) | |

AUDIO

# SECTION 7
# ELECTRICAL PARTS LIST

**NOTE:**

- Due to standardization, replacements in the parts list may be different from the parts specified in the diagrams or the components used on the set.
- -XX, -X mean standardized parts, so they may have some difference from the original one.
- RESISTORS
  All resistors are in ohms
  METAL : Metal-film resistor
  METAL OXIDE :Metal oxide-film resistor
  F : nonflammable
- Items marked " * "are not stocked since they are seldom required for routine service. Some delay should be anticipated when ordering these items.

- SEMICONDUCTORS
  In each case, u : μ , for example :
  uA.... : μ A.... , uPA.... : μ PA....
  uPB.... : μ PB.... , uPC.... : μ PC....
  uPD.... : μ PD....
- CAPACITORS
  uF : μ F
- COILS
  uH : μ H
- Abbreviation
  CND : Canadian SP : Singapore
  AUS : Australian MY : Malaysia
  G : German

The components identified by mark ⚠ or dotted line with mark ⚠ are critical for safety.
Replace only with part number specified.

Les composants identifiés par une marque ⚠ sont critiques pour la sécurité.
Ne les remplacer que par une pièce portant le numéro spécifié.

When indicating parts by reference number, please include the board.

| Ref. No. | Part No. | Description | | | Remark |
|---|---|---|---|---|---|
| * | A-2006-890-A | AUDIO BOARD, COMPLETE (KE300,KE400S) | | | |
| * | A-2007-040-A | AUDIO BOARD, COMPLETE (RX300) | | | |
| * | A-2007-171-A | AUDIO BOARD, COMPLETE (KE200) | | | |
| | | ********** | | | |
| | | < CAPACITOR > | | | |
| C11 | 1-163-133-00 | CERAMIC CHIP | 470PF | 5% | 50V (KE200,KE300,KE400S) |
| C11 | 1-163-131-00 | CERAMIC CHIP | 390PF | 5% | 50V (RX300) |
| C12 | 1-136-157-00 | FILM | 0.022uF | 5% | 50V |
| C13 | 1-124-234-00 | ELECT | 22uF | 20% | 16V |
| C14 | 1-136-272-00 | FILM | 68PF | 5% | 630V (KE200) |
| C15 | 1-102-113-00 | CERAMIC | 390PF | 10% | 50V (KE200) |
| C17 | 1-163-237-11 | CERAMIC CHIP | 27PF | 5% | 50V (KE200) |
| C18 | 1-163-251-11 | CERAMIC CHIP | 100PF | 5% | 50V |
| C21 | 1-163-133-00 | CERAMIC CHIP | 470PF | 5% | 50V (KE200,KE300,KE400S) |
| C21 | 1-163-131-00 | CERAMIC CHIP | 390PF | 5% | 50V (RX300) |
| C22 | 1-136-157-00 | FILM | 0.022uF | 5% | 50V |
| C23 | 1-124-234-00 | ELECT | 22uF | 20% | 16V |
| C24 | 1-136-272-00 | FILM | 68PF | 5% | 630V (KE200) |
| C25 | 1-102-113-00 | CERAMIC | 390PF | 10% | 50V (KE200) |
| C27 | 1-163-237-11 | CERAMIC CHIP | 27PF | 5% | 50V (KE200) |
| C28 | 1-163-251-11 | CERAMIC CHIP | 100PF | 5% | 50V |
| C31 | 1-124-234-00 | ELECT | 22uF | 20% | 16V |
| C32 | 1-124-234-00 | ELECT | 22uF | 20% | 16V |
| C33 | 1-124-234-00 | ELECT | 22uF | 20% | 16V |
| C51 | 1-164-182-11 | CERAMIC CHIP | 0.0033uF | 10% | 50V (KE300,KE400S) |
| C51 | 1-163-019-00 | CERAMIC CHIP | 0.0068uF | 10% | 50V (KE200) |
| C51 | 1-164-161-11 | CERAMIC CHIP | 0.0022uF | 10% | 100V (RX300) |
| C52 | 1-164-182-11 | CERAMIC CHIP | 0.0033uF | 10% | 50V (KE300,KE400S) |
| C52 | 1-163-019-00 | CERAMIC CHIP | 0.0068uF | 10% | 50V (KE200) |
| C52 | 1-164-161-11 | CERAMIC CHIP | 0.0022uF | 10% | 100V (RX300) |
| C53 | 1-163-020-00 | CERAMIC CHIP | 0.0082uF | 10% | 50V (KE300,KE400S) |
| C53 | 1-163-022-00 | CERAMIC CHIP | 0.012uF | 10% | 50V (KE200) |
| C53 | 1-163-019-00 | CERAMIC CHIP | 0.0068uF | 10% | 50V (RX300) |
| C54 | 1-136-601-11 | FILM | 0.01uF | 5% | 630V (EXCEPT KE200) |
| C54 | 1-136-560-11 | FILM | 0.0056uF | 5% | 630V (KE200) |
| C56 | 1-164-505-11 | CERAMIC CHIP | 2.2uF | | 16V |
| C57 | 1-164-346-11 | CERAMIC CHIP | 1uF | | 16V |
| C58 | 1-163-024-00 | CERAMIC CHIP | 0.018uF | 10% | 50V (KE200) |
| C71 | 1-164-346-11 | CERAMIC CHIP | 1uF | | 16V (EXCEPT KE200) |
| C72 | 1-109-889-11 | ELECT | 1uF | 20% | 50V (KE200) |
| C80 | 1-124-234-00 | ELECT | 22uF | 20% | 16V (EXCEPT KE200) |
| C81 | 1-164-232-11 | CERAMIC CHIP | 0.01uF | | 50V (EXCEPT KE200) |
| C82 | 1-136-157-00 | FILM | 0.022uF | 5% | 50V (EXCEPT KE200) |
| C83 | 1-164-004-11 | CERAMIC CHIP | 0.1uF | 10% | 25V (EXCEPT KE200) |
| C84 | 1-136-439-11 | FILM | 330PF | 5% | 630V (KE300,KE400S) |
| C84 | 1-136-478-11 | FILM | 470PF | 5% | 630V (RX300) |
| C85 | 1-136-433-11 | FILM | 100PF | 5% | 630V (EXCEPT KE200) |

| Ref. No. | Part No. | Description | | | Remark |
|---|---|---|---|---|---|
| C86 | 1-163-143-00 | CERAMIC CHIP | 0.0012uF | 5% 50V | (EXCEPT KE200) |
| C87 | 1-136-273-91 | FILM | 75PF | 5% 630V | (EXCEPT KE200) |
| C88 | 1-163-003-11 | CERAMIC CHIP | 330PF | 10% 50V | (EXCEPT KE200) |
| C89 | 1-124-234-00 | ELECT | 22uF | 20% 16V | (EXCEPT KE200) |
| C90 | 1-107-584-11 | CERAMIC | 4PF | 0.25PF 500V | (EXCEPT KE200) |
| C91 | 1-164-232-11 | CERAMIC CHIP | 0.01uF | 50V | (EXCEPT KE200) |
| C92 | 1-136-157-00 | FILM | 0.022uF | 5% 50V | (EXCEPT KE200) |
| C93 | 1-164-004-11 | CERAMIC CHIP | 0.1uF | 10% 25V | (EXCEPT KE200) |
| C94 | 1-136-439-11 | FILM | 330PF | 5% 630V | (KE300,KE400S) |
| C94 | 1-136-478-11 | FILM | 470PF | 5% 630V | (RX300) |
| C95 | 1-136-433-11 | FILM | 100PF | 5% 630V | (EXCEPT KE200) |
| C96 | 1-163-143-00 | CERAMIC CHIP | 0.0012uF | 5% 50V | (EXCEPT KE200) |
| C97 | 1-136-273-91 | FILM | 75PF | 5% 630V | (EXCEPT KE200) |
| C98 | 1-163-003-11 | CERAMIC CHIP | 330PF | 10% 50V | (EXCEPT KE200) |
| C99 | 1-164-005-11 | CERAMIC CHIP | 0.47uF | 25V | (EXCEPT KE200) |

< CONNECTOR >

| | | |
|---|---|---|
| * CNP31 | 1-580-782-11 | CONNECTOR, BOARD TO BOARD |
| * CNP32 | 1-580-781-11 | PIN, CONNECTOR (PC BOARD) 7P |
| * CNP33 | 1-580-782-11 | CONNECTOR, BOARD TO BOARD |
| * CNP71 | 1-564-719-11 | PIN, CONNECTOR (SMALL TYPE) 3P |
| CNP72 | 1-764-902-11 | CONNECTOR, FFC/FPC 4P |
| * CNP75 | 1-564-718-11 | PIN, CONNECTOR (SMALL TYPE) 2P (RX300) |

< DIODE >

| | | |
|---|---|---|
| D31 | 8-719-404-46 | DIODE MA110 |

< IC >

| | | |
|---|---|---|
| IC31 | 8-759-106-02 | IC uPC4570-G2 |
| IC81 | 8-759-106-56 | IC uPC1297CA (EXCEPT KE200) |

< JUMPER RESISTOR >

| Ref. No. | Part No. | Description | | | Remark |
|---|---|---|---|---|---|
| JW1 | 1-216-296-00 | METAL CHIP | 0 | 5% | 1/8W (KE200) |
| JW2 | 1-216-295-00 | METAL CHIP | 0 | 5% | 1/10W (KE200) |
| JW3 | 1-216-295-00 | METAL CHIP | 0 | 5% | 1/10W (KE200) |
| JW4 | 1-216-295-00 | METAL CHIP | 0 | 5% | 1/10W (KE200) |
| JW6 | 1-216-295-00 | METAL CHIP | 0 | 5% | 1/10W (KE200) |
| JW7 | 1-216-295-00 | METAL CHIP | 0 | 5% | 1/10W (KE200) |
| JW52 | 1-216-296-00 | METAL CHIP | 0 | 5% | 1/8W (KE200) |
| JW53 | 1-216-296-00 | METAL CHIP | 0 | 5% | 1/8W (KE200) |
| JW54 | 1-216-296-00 | METAL CHIP | 0 | 5% | 1/8W (KE200) |
| JW55 | 1-216-296-00 | METAL CHIP | 0 | 5% | 1/8W (KE200) |
| JW56 | 1-216-296-00 | METAL CHIP | 0 | 5% | 1/8W (KE200) |
| JW57 | 1-216-296-00 | METAL CHIP | 0 | 5% | 1/8W (KE200) |
| JW58 | 1-216-296-00 | METAL CHIP | 0 | 5% | 1/8W (KE200) |
| JW59 | 1-216-296-00 | METAL CHIP | 0 | 5% | 1/8W (KE200) |
| JW60 | 1-216-296-00 | METAL CHIP | 0 | 5% | 1/8W (KE200) |
| JW61 | 1-216-296-00 | METAL CHIP | 0 | 5% | 1/8W (KE200) |
| JW62 | 1-216-296-00 | METAL CHIP | 0 | 5% | 1/8W (KE200) |
| JW63 | 1-216-296-00 | METAL CHIP | 0 | 5% | 1/8W (KE200) |

< COIL >

| | | | |
|---|---|---|---|
| L11 | 1-410-780-11 | INDUCTOR | 27mH (KE200) |
| L21 | 1-410-780-11 | INDUCTOR | 27mH (KE200) |
| L81 | 1-410-780-11 | INDUCTOR | 27mH (EXCEPT KE200) |
| L91 | 1-410-780-11 | INDUCTOR | 27mH (EXCEPT KE200) |

< TRANSISTOR >

| | | | |
|---|---|---|---|
| Q51 | 8-729-822-05 | TRANSISTOR | 2SD1622-ST-TD (EXCEPT KE200) |
| Q51 | 8-729-142-46 | TRANSISTOR | 2SC2001-LK (KE200) |
| Q52 | 8-729-822-05 | TRANSISTOR | 2SD1622-ST-TD (EXCEPT KE200) |
| Q52 | 8-729-142-46 | TRANSISTOR | 2SC2001-LK (KE200) |
| Q53 | 8-729-822-05 | TRANSISTOR | 2SD1622-ST-TD (EXCEPT KE200) |
| Q53 | 8-729-111-29 | TRANSISTOR | 2SD1616A-K (KE200) |
| Q71 | 8-729-602-36 | TRANSISTOR | 2SA1602-F (KE300,KE400S) |
| Q71 | 8-729-216-22 | TRANSISTOR | 2SA1162-G (KE200,RX300) |

< RESISTOR >

| Ref. No. | Part No. | Description | | | Remark |
|---|---|---|---|---|---|
| R11 | 1-216-107-00 | METAL CHIP | 270K | 5% | 1/10W (EXCEPT RX300) |
| R11 | 1-216-099-00 | METAL CHIP | 120K | 5% | 1/10W (RX300) |
| R12 | 1-216-025-91 | METAL GLAZE | 100 | 5% | 1/10W |
| R13 | 1-216-100-00 | METAL GLAZE | 130K | 5% | 1/10W |
| R14 | 1-216-068-00 | METAL CHIP | 6.2K | 5% | 1/10W |

# AUDIO

| Ref. No. | Part No. | Description | | | Remark |
|---|---|---|---|---|---|
| R15 | 1-249-430-11 | CARBON | 12K | 5% | 1/4W (KE200) |
| R21 | 1-216-107-00 | METAL CHIP | 270K | 5% | 1/10W (EXCEPT RX300) |
| R21 | 1-216-099-00 | METAL CHIP | 120K | 5% | 1/10W (RX300) |
| R22 | 1-216-025-91 | METAL GLAZE | 100 | 5% | 1/10W |
| R23 | 1-216-100-00 | METAL GLAZE | 130K | 5% | 1/10W |
| R24 | 1-216-068-00 | METAL CHIP | 6.2K | 5% | 1/10W |
| R25 | 1-249-430-11 | CARBON | 12K | 5% | 1/4W (KE200) |
| R31 | 1-216-033-00 | METAL CHIP | 220 | 5% | 1/10W |
| R32 | 1-216-033-00 | METAL CHIP | 220 | 5% | 1/10W |
| R33 | 1-216-065-00 | METAL CHIP | 4.7K | 5% | 1/10W (EXCEPT KE200) |
| R41 | 1-249-393-11 | CARBON | 10 | 5% | 1/4W (KE200) |
| R42 | 1-249-393-11 | CARBON | 10 | 5% | 1/4W (KE200) |
| R51 | 1-216-091-00 | METAL CHIP | 56K | 5% | 1/10W (KE300,KE400S) |
| R51 | 1-216-085-00 | METAL CHIP | 33K | 5% | 1/10W (KE200) |
| R51 | 1-216-097-91 | METAL GLAZE | 100K | 5% | 1/10W (RX300) |
| R52 | 1-216-091-00 | METAL CHIP | 56K | 5% | 1/10W (KE300,KE400S) |
| R52 | 1-216-085-00 | METAL CHIP | 33K | 5% | 1/10W (KE200) |
| R52 | 1-216-097-91 | METAL GLAZE | 100K | 5% | 1/10W (RX300) |
| R53 | 1-216-073-00 | METAL CHIP | 10K | 5% | 1/10W |
| R54 | 1-216-309-00 | METAL CHIP | 5.6 | 5% | 1/10W |
| R55 | 1-216-309-00 | METAL CHIP | 5.6 | 5% | 1/10W |
| R56 | 1-216-298-00 | METAL CHIP | 2.2 | 5% | 1/10W (KE200) |
| R57 | 1-216-298-00 | METAL CHIP | 2.2 | 5% | 1/10W (EXCEPT KE200) |
| R71 | 1-216-025-91 | METAL GLAZE | 100 | 5% | 1/10W (KE300,KE400S) |
| R71 | 1-216-082-00 | METAL GLAZE | 24K | 5% | 1/10W (KE200,RX300) |
| R72 | 1-216-055-00 | METAL CHIP | 1.8K | 5% | 1/10W (KE300,KE400S) |
| R72 | 1-216-081-00 | METAL CHIP | 22K | 5% | 1/10W (KE200,RX300) |
| R73 | 1-216-089-91 | METAL GLAZE | 47K | 5% | 1/10W |
| R74 | 1-216-089-91 | METAL GLAZE | 47K | 5% | 1/10W |
| R81 | 1-216-073-00 | METAL CHIP | 10K | 5% | 1/10W (EXCEPT KE200) |
| R82 | 1-216-085-00 | METAL CHIP | 33K | 5% | 1/10W (EXCEPT KE200) |
| R83 | 1-216-001-00 | METAL CHIP | 10 | 5% | 1/10W (EXCEPT KE200) |
| R84 | 1-216-101-00 | METAL CHIP | 150K | 5% | 1/10W (EXCEPT KE200) |
| R85 | 1-216-075-00 | METAL CHIP | 12K | 5% | 1/10W (EXCEPT KE200) |
| R91 | 1-216-073-00 | METAL CHIP | 10K | 5% | 1/10W (EXCEPT KE200) |
| R92 | 1-216-085-00 | METAL CHIP | 33K | 5% | 1/10W (EXCEPT KE200) |
| R93 | 1-216-001-00 | METAL CHIP | 10 | 5% | 1/10W (EXCEPT KE200) |
| R94 | 1-216-101-00 | METAL CHIP | 150K | 5% | 1/10W (EXCEPT KE200) |
| R95 | 1-216-075-00 | METAL CHIP | 12K | 5% | 1/10W (EXCEPT KE200) |

< VARIABLE RESISTOR >

| | | |
|---|---|---|
| RV11 | 1-241-761-11 | RES, ADJ, CARBON 1K (PB LEVEL L) |
| RV12 | 1-238-551-11 | RES, ADJ, CARBON 220K (BIAS L) (KE200) |
| RV21 | 1-241-761-11 | RES, ADJ, CARBON 1K (PB LEVEL R) (KE200,RX300) |
| RV22 | 1-238-551-11 | RES, ADJ, CARBON 220K (BIAS R) (KE200) |
| RV71 | 1-241-630-11 | RES, ADJ, CARBON 10K (TAPE SPEED L) (KE200,RX300) |
| RV71 | 1-241-761-11 | RES, ADJ, CARBON 1K (TAPE SPEED L) (KE300,KE400S) |
| RV72 | 1-241-630-11 | RES, ADJ, CARBON 10K (TAPE SPEED H) (KE200,RX300) |
| RV72 | 1-241-762-11 | RES, ADJ, CARBON 2.2K (TAPE SPEED H) (KE300,KE400S) |
| RV81 | 1-241-786-11 | RES, ADJ, CARBON 22K (REC BIAS L) (EXCEPT KE200) |
| RV91 | 1-241-786-11 | RES, ADJ, CARBON 22K (REC BIAS R) (EXCEPT KE200) |

< RELAY >

| | | |
|---|---|---|
| RY31 | 1-515-913-11 | RELAY |

< TRANSFORMER >

| | | |
|---|---|---|
| T51 | 1-433-383-11 | TRANSFORMER, BIAS OSCILLATION (KE300,KE400S) |
| T51 | 1-426-650-11 | TRANSFORMER, BIAS OSCILLATION (KE200) |
| T51 | 1-406-417-11 | COIL, BIAS OSCILLATION (RX300) |
| T81 | 1-433-398-11 | TRANSFORMER, BIAS OSCILLATOR (KE300,KE400S) |
| T81 | 1-433-381-11 | TRANSFORMER, BIAS OSCILLATOR (RX300) |
| T91 | 1-433-398-11 | TRANSFORMER, BIAS OSCILLATOR (KE300,KE400S) |
| T91 | 1-433-381-11 | TRANSFORMER, BIAS OSCILLATOR (RX300) |

< TEST PIN >

| | | |
|---|---|---|
| * TP81 | 1-568-449-11 | HOUSING, CONNECTOR(PC BOARD)3P (EXCEPT KE200) |

**********

| Ref. No. | Part No. | Description | | | Remark |
|---|---|---|---|---|---|
| * | A-2007-481-A | DOLBY-S BOARD, COMPLETE (KE400S) | | | |
| | | ********** | | | |
| | | < CAPACITOR > | | | |
| C1 | 1-136-165-00 | FILM | 0.1uF | 5% | 50V |
| C2 | 1-163-012-00 | CERAMIC CHIP | 0.0018uF | 10% | 50V |
| C3 | 1-163-012-00 | CERAMIC CHIP | 0.0018uF | 10% | 50V |
| C4 | 1-164-222-11 | CERAMIC CHIP | 0.22uF | | 25V |
| C5 | 1-136-165-00 | FILM | 0.1uF | 5% | 50V |
| C6 | 1-136-165-00 | FILM | 0.1uF | 5% | 50V |
| C7 | 1-137-372-11 | FILM | 0.022uF | 5% | 50V |
| C8 | 1-164-222-11 | CERAMIC CHIP | 0.22uF | | 25V |
| C9 | 1-126-301-11 | ELECT | 1uF | 20% | 50V |
| C10 | 1-137-442-11 | FILM | 0.039uF | 5% | 50V |
| C11 | 1-163-007-11 | CERAMIC CHIP | 680PF | 10% | 50V |
| C12 | 1-164-717-11 | CERAMIC CHIP | 0.0082uF | 5% | 50V |
| C13 | 1-163-038-91 | CERAMIC CHIP | 0.1uF | | 25V |
| C14 | 1-124-465-00 | ELECT | 0.47uF | 20% | 50V |
| C15 | 1-164-222-11 | CERAMIC CHIP | 0.22uF | | 25V |
| C16 | 1-163-038-91 | CERAMIC CHIP | 0.1uF | | 25V |
| C17 | 1-124-465-00 | ELECT | 0.47uF | 20% | 50V |
| C18 | 1-163-038-91 | CERAMIC CHIP | 0.1uF | | 25V |
| C19 | 1-164-222-11 | CERAMIC CHIP | 0.22uF | | 25V |
| C20 | 1-163-035-00 | CERAMIC CHIP | 0.047uF | | 50V |
| C21 | 1-164-717-11 | CERAMIC CHIP | 0.0082uF | 5% | 50V |
| C22 | 1-164-161-11 | CERAMIC CHIP | 0.0022uF | 10% | 100V |
| C23 | 1-163-005-11 | CERAMIC CHIP | 470PF | 10% | 50V |
| C24 | 1-137-442-11 | FILM | 0.039uF | 5% | 50V |
| C25 | 1-136-165-00 | FILM | 0.1uF | 5% | 50V |
| C26 | 1-137-372-11 | FILM | 0.022uF | 5% | 50V |
| C28 | 1-163-038-91 | CERAMIC CHIP | 0.1uF | | 25V |
| | | < CONNECTOR > | | | |
| CN1 | 1-695-092-11 | SOCKET, CONNECTOR 7P | | | |
| | | < IC > | | | |
| IC1 | 8-752-076-30 | IC CXA1917AM | | | |
| | | < JUMPER RESISTOR> | | | |
| J1 | 1-216-296-00 | METAL CHIP | 0 | 0.5% | 1/8W |
| J2 | 1-216-296-00 | METAL CHIP | 0 | 0.5% | 1/8W |
| J3 | 1-216-296-00 | METAL CHIP | 0 | 0.5% | 1/8W |
| | | < RESISTOR > | | | |
| R1 | 1-216-685-11 | METAL CHIP | 27K | 0.5% | 1/10W |
| R2 | 1-208-811-11 | METAL GLAZE | 16K | 2% | 1/10W |
| R3 | 1-208-791-11 | METAL GLAZE | 2.4K | 2% | 1/10W |
| R4 | 1-208-799-11 | METAL GLAZE | 5.1K | 2% | 1/10W |
| R5 | 1-216-689-11 | METAL CHIP | 39K | 0.5% | 1/10W |
| R6 | 1-216-689-11 | METAL CHIP | 39K | 0.5% | 1/10W |
| R7 | 1-216-615-11 | METAL CHIP | 33 | 0.5% | 1/10W |
| R8 | 1-208-462-41 | METAL GLAZE | 10K | 2% | 1/10W |
| R9 | 1-208-812-11 | METAL GLAZE | 18K | 2% | 1/10W |
| R10 | 1-216-615-11 | METAL CHIP | 33 | 0.5% | 1/10W |
| R11 | 1-216-619-11 | METAL CHIP | 47 | 0.5% | 1/10W |
| R12 | 1-216-684-11 | METAL CHIP | 24K | 0.5% | 1/10W |
| R13 | 1-216-615-11 | METAL CHIP | 33 | 0.5% | 1/10W |
| R14 | 1-216-619-11 | METAL CHIP | 47 | 0.5% | 1/10W |
| R15 | 1-216-655-11 | METAL CHIP | 1.5K | 0.5% | 1/10W |
| R16 | 1-216-678-11 | METAL CHIP | 13K | 0.5% | 1/10W |
| R17 | 1-216-673-11 | METAL CHIP | 8.2K | 0.5% | 1/10W |
| R18 | 1-208-462-41 | METAL GLAZE | 10K | 2% | 1/10W |
| R19 | 1-208-462-41 | METAL GLAZE | 10K | 2% | 1/10W |
| R20 | 1-216-689-11 | METAL CHIP | 39K | 0.5% | 1/10W |
| ********** | | | | | |
| * | 1-638-020-11 | LEAF SW BOARD | | | |
| | | ********** | | | |
| | | < CONNECTOR > | | | |
| * CNP81 | 1-568-850-11 | SOCKET, CONNECTOR 7P | | | |
| CNP81 | 1-695-368-31 | PIN, CONNECTOR (PC BOARD) 7P | | | |
| | | < IC > | | | |
| IC81 | 8-749-924-10 | IC (PHONT REFLECTOR NJL5165K-B (H1)) | | | |
| | | < RESISTOR > | | | |
| R81 | 1-249-414-11 | CARBON | 560 | 5% | 1/4W |
| R82 | 1-247-818-11 | CARBON | 300 | 5% | 1/4W (RX300) |
| R83 | 1-247-834-11 | CARBON | 1.3K | 5% | 1/4W |
| R84 | 1-249-417-11 | CARBON | 1K | 5% | 1/4W |
| R85 | 1-249-408-11 | CARBON | 180 | 5% | 1/4W |
| | | < SWITCH > | | | |
| S81 | 1-571-958-11 | SWITCH, PUSH (1 KEY) (STOP) | | | |
| S82 | 1-571-281-21 | SWITCH, LEAF (70uS) | | | |
| S83 | 1-571-281-21 | SWITCH, LEAF (METAL) | | | |
| S84 | 1-571-281-21 | SWITCH, LEAF (REC-A) | | | |
| S85 | 1-571-281-21 | SWITCH, LEAF (REC-B) (RX300) | | | |
| S86 | 1-571-281-21 | SWITCH, LEAF (HALF) | | | |
| ********** | | | | | |

| Ref. No. | Part No. | Description | | | | Remark |
|---|---|---|---|---|---|---|
| * | A-2007-523-A | MAIN BOARD, COMPLETE (KE200) | | | | |
| * | A-2007-524-A | MAIN BOARD, COMPLETE (KE400S:EXCEPT US) | | | | |
| * | A-2007-525-A | MAIN BOARD, COMPLETE (KE400S:US) | | | | |
| * | A-2007-526-A | MAIN BOARD, COMPLETE (KE300:EXCEPT E) | | | | |
| * | A-2007-527-A | MAIN BOARD, COMPLETE (KE300:E) | | | | |
| * | A-2007-591-A | MAIN BOARD, COMPLETE (RX300) | | | | |
| | | ********** | | | | |
| | | AC POWER SW BOARD (EXCEPT US,CND,E) | | | | |
| | | ********** | | | | |
| | | PANEL BOARD | | | | |
| | | ********** | | | | |
| | | POWER SW BOARD (US,CND,E) | | | | |
| | | ********** | | | | |
| | | REC VOL BOARD | | | | |
| | | ********** | | | | |
| | | TRANSFORMER BOARD | | | | |
| | | ********** | | | | |
| | | HP BOARD | | | | |
| | | ********* | | | | |
| * | 3-377-337-11 | HOLDER (FL) | | | | |
| * | 3-923-762-11 | HOLDER (TR) | | | | |
| | | < CAPACITOR > | | | | |
| C101 | 1-137-372-11 | FILM | 0.022uF | 5% | 50V | (EXCEPT KE200) |
| C101 | 1-136-157-00 | FILM | 0.022uF | 5% | 50V | (KE200) |
| C102 | 1-126-963-11 | ELECT | 4.7uF | 20% | 50V | |
| C103 | 1-162-302-11 | CERAMIC | 0.0022uF | 20% | 16V | (EXCEPT KE200) |
| C104 | 1-126-964-11 | ELECT | 10uF | 20% | 50V | |
| C105 | 1-136-165-00 | FILM | 0.1uF | 5% | 50V | |
| C106 | 1-136-163-00 | FILM | 0.068uF | 5% | 50V | |
| C107 | 1-126-965-11 | ELECT | 22uF | 20% | 50V | |
| C108 | 1-126-964-11 | ELECT | 10uF | 20% | 50V | (KE400S) |
| C109 | 1-126-964-11 | ELECT | 10uF | 20% | 50V | |
| C110 | 1-126-963-11 | ELECT | 4.7uF | 20% | 50V | |
| C111 | 1-126-962-11 | ELECT | 3.3uF | 20% | 50V | |
| C112 | 1-124-902-00 | ELECT | 0.47uF | 20% | 50V | |
| C113 | 1-126-963-11 | ELECT | 4.7uF | 20% | 50V | |
| C131 | 1-126-963-11 | ELECT | 4.7uF | 20% | 50V | (EXCEPT KE200) |
| C132 | 1-126-962-11 | ELECT | 3.3uF | 20% | 50V | |
| C133 | 1-162-294-31 | CERAMIC | 0.001uF | 10% | 50V | |
| C201 | 1-137-372-11 | FILM | 0.022uF | 5% | 50V | (EXCEPT KE200) |
| C201 | 1-136-157-00 | FILM | 0.022uF | 5% | 50V | (KE200) |
| C202 | 1-126-963-11 | ELECT | 4.7uF | 20% | 50V | |
| C203 | 1-162-302-11 | CERAMIC | 0.0022uF | 20% | 16V | (EXCEPT KE200) |
| C204 | 1-126-964-11 | ELECT | 10uF | 20% | 50V | |
| C205 | 1-136-165-00 | FILM | 0.1uF | 5% | 50V | |
| C206 | 1-136-163-00 | FILM | 0.068uF | 5% | 50V | |

| Ref. No. | Part No. | Description | | | | Remark |
|---|---|---|---|---|---|---|
| C207 | 1-126-965-11 | ELECT | 22uF | 20% | 50V | |
| C208 | 1-126-964-11 | ELECT | 10uF | 20% | 50V | (KE400S) |
| C209 | 1-126-964-11 | ELECT | 10uF | 20% | 50V | |
| C210 | 1-126-963-11 | ELECT | 4.7uF | 20% | 50V | |
| C211 | 1-126-962-11 | ELECT | 3.3uF | 20% | 50V | |
| C212 | 1-124-902-00 | ELECT | 0.47uF | 20% | 50V | |
| C213 | 1-126-963-11 | ELECT | 4.7uF | 20% | 50V | |
| C231 | 1-126-963-11 | ELECT | 4.7uF | 20% | 50V | (EXCEPT KE200) |
| C232 | 1-126-962-11 | ELECT | 3.3uF | 20% | 50V | |
| C233 | 1-162-294-31 | CERAMIC | 0.001uF | 10% | 50V | |
| C501 | 1-126-952-11 | ELECT | 1000uF | 20% | 16V | |
| C502 | 1-126-964-11 | ELECT | 10uF | 20% | 50V | |
| C503 | 1-126-964-11 | ELECT | 10uF | 20% | 50V | |
| C504 | 1-124-903-11 | ELECT | 1uF | 20% | 50V | (EXCEPT KE200) |
| C505 | 1-126-964-11 | ELECT | 10uF | 20% | 50V | |
| C506 | 1-126-925-11 | ELECT | 470uF | 20% | 10V | (KE400S,KE200) |
| C506 | 1-126-933-11 | ELECT | 100uF | 20% | 10V | (KE300,RX300) |
| C511 | 1-137-374-11 | FILM | 0.047uF | 5% | 50V | (EXCEPT KE200) |
| C512 | 1-136-164-00 | FILM | 0.082uF | 5% | 50V | (EXCEPT KE200) |
| C513 | 1-137-367-11 | FILM | 0.0033uF | 5% | 50V | (EXCEPT KE200) |
| C521 | 1-126-964-11 | ELECT | 10uF | 20% | 50V | |
| C551 | 1-162-282-31 | CERAMIC | 100PF | 10% | 50V | |
| C552 | 1-161-494-00 | CERAMIC | 0.022uF | | 25V | |
| C553 | 1-162-217-31 | CERAMIC | 56PF | 5% | 50V | |
| C554 | 1-124-925-11 | ELECT | 2.2uF | 20% | 100V | |
| C555 | 1-124-925-11 | ELECT | 2.2uF | 20% | 100V | |
| C571 | 1-124-925-11 | ELECT | 2.2uF | 20% | 100V | |
| C572 | 1-126-916-11 | ELECT | 1000uF | 20% | 6.3V | |
| C601 | 1-164-159-11 | CERAMIC | 0.1uF | | 50V | |
| C602 | 1-162-288-31 | CERAMIC | 330PF | 10% | 50V | |
| C701 | 1-126-943-11 | ELECT | 2200uF | 20% | 25V | |
| C702 | 1-126-943-11 | ELECT | 2200uF | 20% | 25V | |
| C703 | 1-104-664-11 | ELECT | 47uF | 20% | 25V | |
| C704 | 1-126-926-11 | ELECT | 1000uF | 20% | 10V | |
| C705 | 1-126-926-11 | ELECT | 1000uF | 20% | 10V | |
| C706 | 1-126-935-11 | ELECT | 470uF | 20% | 6.3V | |
| C707 | 1-126-964-11 | ELECT | 10uF | 20% | 50V | |
| C708 | 1-126-963-11 | ELECT | 4.7uF | 20% | 50V | |
| C709 | 1-126-968-11 | ELECT | 100uF | 20% | 50V | |
| C710 | 1-104-664-11 | ELECT | 47uF | 20% | 25V | |
| C711 | 1-164-159-11 | CERAMIC | 0.1uF | | 50V | |
| C712 | 1-161-494-00 | CERAMIC | 0.022uF | | 25V | |
| ⚠C713 | 1-113-925-11 | CERAMIC | 0.01uF | 20% | 250V | (EXCEPT US,E) |

The components identified by mark ⚠ or dotted line with mark ⚠ are critical for safety.
Replace only with part number specified.

Les composants identifiés par une marque ⚠ sont critiques pour la sécurité.
Ne les remplacer que par une pièce portant le numéro spécifié.

| Ref. No. | Part No. | Description | Remark |
|---|---|---|---|
| C714 | 1-136-169-00 | FILM 0.22uF 5% | 50V (KE200,KE300:EXCEPT E.KE400S) |
| C715 | 1-136-169-00 | FILM 0.22uF 5% | 50V (KE200,KE300:EXCEPT E.KE400S) |
| ⚠C716 | 1-113-920-11 | CERAMIC 0.0022uF 20% | 250V (RX300) |
| C801 | 1-126-963-11 | ELECT 4.7uF 20% | 50V |
| C803 | 1-161-494-00 | CERAMIC 0.022uF | 25V |
| C804 | 1-161-494-00 | CERAMIC 0.022uF | 25V |
| C805 | 1-161-494-00 | CERAMIC 0.022uF | 25V |
| C806 | 1-126-964-11 | ELECT 10uF 20% | 50V |
| C807 | 1-126-935-11 | ELECT 470uF 20% | 6.3V |
| C808 | 1-161-494-00 | CERAMIC 0.022uF | 25V |
| C809 | 1-161-494-00 | CERAMIC 0.022uF | 25V |
| C810 | 1-162-282-31 | CERAMIC 100PF 10% | 50V |
| C811 | 1-164-159-11 | CERAMIC 0.1uF | 50V |
| C812 | 1-137-374-11 | FILM 0.047uF 5% | 50V (KE200,KE300:EXCEPT E.KE400S) |
| | | < CONNECTOR > | |
| * CN81 | 1-568-826-11 | SOCKET, CONNECTOR 7P | |
| CN101 | 1-695-087-11 | PIN, CONNECTOR (PC BOARD) 7P (KE400S) | |
| CN201 | 1-695-087-11 | PIN, CONNECTOR (PC BOARD) 7P (KE400S) | |
| * CN504 | 1-568-830-11 | SOCKET, CONNECTOR 11P | |
| * CN505 | 1-568-954-11 | PIN, CONNECTOR 5P (US,CND,E) | |
| CN506 | 1-506-468-11 | PIN, CONNECTOR 3P | |
| CN701 | 1-564-510-11 | PLUG, CONNECTOR 7P | |
| * CN702 | 1-580-230-31 | PIN, CONNECTOR (PC BOARD) 2P | |
| * CN703 | 1-573-565-11 | PIN, CONNECTOR 5P (KE300:E) | |
| CN704 | 1-568-226-11 | PIN, CONNECTOR 2P (EXCEPT US,E) | |
| * CN801 | 1-568-844-11 | SOCKET, CONNECTOR 29P | |
| * CN901 | 1-568-844-11 | SOCKET, CONNECTOR 29P | |
| * CN904 | 1-568-830-11 | SOCKET, CONNECTOR 11P | |
| * CNB31 | 1-691-916-11 | CONNECTOR, BOARD TO BOARD | |
| * CNB33 | 1-691-916-11 | CONNECTOR, BOARD TO BOARD | |
| | | < DIODE > | |
| D131 | 8-719-987-63 | DIODE 1N4148M | |
| D132 | 8-719-987-63 | DIODE 1N4148M | |
| D231 | 8-719-987-63 | DIODE 1N4148M | |
| D232 | 8-719-987-63 | DIODE 1N4148M | |
| D511 | 8-719-987-63 | DIODE 1N4148M (EXCEPT KE200) | |
| D512 | 8-719-987-63 | DIODE 1N4148M (EXCEPT KE200) | |
| D513 | 8-719-987-63 | DIODE 1N4148M | |
| D551 | 8-719-987-63 | DIODE 1N4148M | |
| D701 | 8-719-024-99 | DIODE 11ES2-NTA2B | |
| D702 | 8-719-024-99 | DIODE 11ES2-NTA2B | |
| D703 | 8-719-024-99 | DIODE 11ES2-NTA2B | |
| D704 | 8-719-024-99 | DIODE 11ES2-NTA2B | |
| D705 | 8-719-024-99 | DIODE 11ES2-NTA2B | |
| D706 | 8-719-024-99 | DIODE 11ES2-NTA2B | |
| D707 | 8-719-024-99 | DIODE 11ES2-NTA2B | |
| D708 | 8-719-933-33 | DIODE HZS6A1L | |

| Ref. No. | Part No. | Description | Remark |
|---|---|---|---|
| D709 | 8-719-933-54 | DIODE HZS9A2L | |
| D710 | 8-719-000-60 | DIODE UZL-6M2 | |
| D711 | 8-719-987-63 | DIODE 1N4148M | |
| D712 | 8-719-987-63 | DIODE 1N4148M | |
| D713 | 8-719-000-93 | DIODE UZL-7H1 | |
| D714 | 8-719-987-63 | DIODE 1N4148M | |
| D715 | 8-719-985-41 | DIODE HZS2CLL | |
| D801 | 8-719-933-33 | DIODE HZS6A1L | |
| D802 | 8-719-933-33 | DIODE HZS6A1L | |
| | | < INDICATOR TUBE > | |
| FL901 | 1-517-374-11 | INDICATOR TUBE, FLUORESCENT (KE400S) | |
| FL901 | 1-517-173-11 | INDICATOR TUBE, FLUORESCENT (EXCEPT KE400S) | |
| | | < IC > | |
| IC501 | 8-752-066-35 | IC CXA1563S (KE400S) | |
| IC501 | 8-752-060-46 | IC CXA1561S (EXCEPT KE400S) | |
| IC502 | 8-752-055-62 | IC CXA1579P (EXCEPT RX300) | |
| IC502 | 8-752-055-61 | IC CXA1578P (RX300) | |
| IC503 | 8-759-634-51 | IC M5218AP (EXCEPT KE200) | |
| IC504 | 8-759-634-51 | IC M5218AP | |
| IC505 | 8-759-634-51 | IC M5218AP | |
| IC506 | 8-759-140-53 | IC MC14053BCP (EXCEPT KE200) | |
| IC507 | 8-759-634-51 | IC M5218AP (EXCEPT KE200) | |
| IC508 | 8-759-000-48 | IC MC14052BCP | |
| IC509 | 8-759-916-14 | IC SN74HC04AN (EXCEPT KE200) | |
| IC510 | 8-759-634-51 | IC M5218AP | |
| IC511 | 8-759-634-51 | IC M5218AP | |
| IC512 | 8-759-634-51 | IC M5218AP (KE400S) | |
| IC601 | 8-759-803-42 | IC LA6500-FA | |
| IC701 | 8-759-634-51 | IC M5218AP | |
| IC801 | 8-752-856-27 | IC CXP82612-022Q | |
| IC802 | 8-759-165-82 | IC PST600E-T | |
| IC901 | 8-741-810-59 | IC SBX1810-59 | |
| | | < JACK > | |
| J501 | 1-770-614-11 | JACK, PIN 4P (LINE) | |
| J502 | 1-568-519-41 | JACK, LARGE TYPE (PHONES) | |
| | | < FILTER > | |
| LPF101 | 1-235-175-11 | FILTER, LOW PASS (EXCEPT KE200) | |
| LPF101 | 1-236-087-11 | FILTER, LOW PASS (KE200) | |
| LPF201 | 1-235-175-11 | FILTER, LOW PASS (EXCEPT KE200) | |
| LPF201 | 1-236-087-11 | FILTER, LOW PASS (KE200) | |
| | | < TRANSISTOR > | |
| Q101 | 8-729-900-89 | TRANSISTOR DTC144ES | |
| Q102 | 8-729-900-80 | TRANSISTOR DTC114ES (EXCEPT KE200) | |
| Q121 | 8-729-922-37 | TRANSISTOR 2SD2144S-UVW | |
| Q122 | 8-729-119-78 | TRANSISTOR 2SC2785-HFE (EXCEPT KE200) | |
| Q201 | 8-729-900-89 | TRANSISTOR DTC144ES | |

The components identified by mark ⚠ or dotted line with mark ⚠ are critical for safety.
Replace only with part number specified.

Les composants identifiés par une marque ⚠ sont critiques pour la sécurité.
Ne les remplacer que par une pièce portant le numéro spécifié.

| Ref. No. | Part No. | Description | Remark |
|---|---|---|---|
| Q202 | 8-729-900-80 | TRANSISTOR | DTC114ES (EXCEPT KE200) |
| Q221 | 8-729-922-37 | TRANSISTOR | 2SD2144S-UVW |
| Q222 | 8-729-119-78 | TRANSISTOR | 2SC2785-HFE (EXCEPT KE200) |
| Q503 | 8-729-422-57 | TRANSISTOR | UN4111 |
| Q504 | 8-729-900-80 | TRANSISTOR | DTC114ES |
| Q505 | 8-729-900-89 | TRANSISTOR | DTC144ES (RX300) |
| Q511 | 8-729-119-78 | TRANSISTOR | 2SC2785-HFE (EXCEPT KE200) |
| Q512 | 8-729-900-74 | TRANSISTOR | DTC143ES (EXCEPT KE200) |
| Q521 | 8-729-900-80 | TRANSISTOR | DTC114ES |
| Q531 | 8-729-422-57 | TRANSISTOR | UN4111 (EXCEPT KE200) |
| Q532 | 8-729-900-80 | TRANSISTOR | DTC114ES |
| Q551 | 8-729-119-76 | TRANSISTOR | 2SA1175-HFE |
| Q572 | 8-729-422-57 | TRANSISTOR | UN4111 |
| Q573 | 8-729-900-65 | TRANSISTOR | DTA144ES (EXCEPT KE200) |
| Q601 | 8-729-801-93 | TRANSISTOR | 2SD1387-3 |
| Q701 | 8-729-141-83 | TRANSISTOR | 2SB1094-LK |
| Q702 | 8-729-209-15 | TRANSISTOR | 2SD2012 |
| Q703 | 8-729-900-74 | TRANSISTOR | DTC143TS (EXCEPT KE200) |
| Q704 | 8-729-141-83 | TRANSISTOR | 2SB1094-LK |
| Q705 | 8-729-119-78 | TRANSISTOR | 2SC2785-HFE |
| Q706 | 8-729-900-74 | TRANSISTOR | DTC143TS (EXCEPT KE200) |
| Q707 | 8-729-119-76 | TRANSISTOR | 2SA1175-HFE |
| Q708 | 8-729-140-04 | TRANSISTOR | 2SB1116A-L |
| Q803 | 8-729-900-80 | TRANSISTOR | DTC114ES |
| Q805 | 8-729-119-76 | TRANSISTOR | 2SA1175-HFE |

< RESISTOR >

| Ref. No. | Part No. | Description | | | Remark |
|---|---|---|---|---|---|
| R101 | 1-247-838-00 | CARBON | 2K | 5% | 1/4W (EXCPT RX300) |
| R101 | 1-249-421-11 | CARBON | 2.2K | 5% | 1/4W (RX300) |
| R102 | 1-247-842-11 | CARBON | 3K | 5% | 1/4W (EXCEPT RX300) |
| R102 | 1-249-423-11 | CARBON | 3.3K | 5% | 1/4W (RX300) |
| R104 | 1-249-417-11 | CARBON | 1K | 5% | 1/4W |
| R105 | 1-249-423-11 | CARBON | 3.3K | 5% | 1/4W |
| R106 | 1-247-887-00 | CARBON | 220K | 5% | 1/4W (EXCEPT KE200) |
| R107 | 1-249-428-11 | CARBON | 8.2K | 5% | 1/4W |
| R108 | 1-249-429-11 | CARBON | 10K | 5% | 1/4W |
| R110 | 1-249-429-11 | CARBON | 10K | 5% | 1/4W |
| R111 | 1-249-423-11 | CARBON | 3.3K | 5% | 1/4W |
| R112 | 1-247-864-11 | CARBON | 24K | 5% | 1/4W (KE400S) |
| R113 | 1-249-429-11 | CARBON | 10K | 5% | 1/4W (KE400S) |
| R114 | 1-249-437-11 | CARBON | 47K | 5% | 1/4W (KE400S) |
| R121 | 1-249-437-11 | CARBON | 47K | 5% | 1/4W |
| R122 | 1-249-421-11 | CARBON | 2.2K | 5% | 1/4W |
| R123 | 1-249-421-11 | CARBON | 2.2K | 5% | 1/4W |
| R124 | 1-249-437-11 | CARBON | 47K | 5% | 1/4W (EXCEPT KE200) |
| R125 | 1-249-425-11 | CARBON | 4.7K | 5% | 1/4W (EXCEPT KE200) |
| R131 | 1-249-425-11 | CARBON | 4.7K | 5% | 1/4W (EXCEPT KE200) |
| R132 | 1-247-822-11 | CARBON | 430 | 5% | 1/4W (EXCEPT KE200) |
| R133 | 1-247-866-11 | CARBON | 30K | 5% | 1/4W (EXCEPT KE200) |
| R134 | 1-249-435-11 | CARBON | 33K | 5% | 1/4W |
| R135 | 1-249-439-11 | CARBON | 68K | 5% | 1/4W |
| R136 | 1-249-410-11 | CARBON | 270 | 5% | 1/4W |
| R141 | 1-249-432-11 | CARBON | 18K | 5% | 1/4W |
| R142 | 1-249-432-11 | CARBON | 18K | 5% | 1/4W |
| R143 | 1-249-423-11 | CARBON | 3.3K | 5% | 1/4W |
| R144 | 1-247-848-11 | CARBON | 5.1K | 5% | 1/4W |
| R145 | 1-249-409-11 | CARBON | 220 | 5% | 1/4W |
| R151 | 1-249-433-11 | CARBON | 22K | 5% | 1/4W |
| R152 | 1-249-417-11 | CARBON | 1K | 5% | 1/4W |
| R153 | 1-249-441-11 | CARBON | 100K | 5% | 1/4W |
| R154 | 1-249-433-11 | CARBON | 22K | 5% | 1/4W |
| R201 | 1-247-838-00 | CARBON | 2K | 5% | 1/4W (EXCEPT RX300) |
| R201 | 1-249-421-11 | CARBON | 2.2K | 5% | 1/4W (RX300) |
| R202 | 1-247-842-11 | CARBON | 3K | 5% | 1/4W (EXCEPT RX300) |
| R202 | 1-249-423-11 | CARBON | 3.3K | 5% | 1/4W (RX300) |
| R204 | 1-249-417-11 | CARBON | 1K | 5% | 1/4W |
| R205 | 1-249-423-11 | CARBON | 3.3K | 5% | 1/4W |
| R206 | 1-247-887-00 | CARBON | 220K | 5% | 1/4W (EXCEPT KE200) |
| R207 | 1-249-428-11 | CARBON | 8.2K | 5% | 1/4W |
| R208 | 1-249-429-11 | CARBON | 10K | 5% | 1/4W |
| R210 | 1-249-429-11 | CARBON | 10K | 5% | 1/4W |
| R211 | 1-249-423-11 | CARBON | 3.3K | 5% | 1/4W |
| R212 | 1-247-864-11 | CARBON | 24K | 5% | 1/4W (KE400S) |
| R213 | 1-249-429-11 | CARBON | 10K | 5% | 1/4W (KE400S) |
| R214 | 1-249-437-11 | CARBON | 47K | 5% | 1/4W (KE400S) |
| R221 | 1-249-437-11 | CARBON | 47K | 5% | 1/4W |
| R222 | 1-249-421-11 | CARBON | 2.2K | 5% | 1/4W |
| R223 | 1-249-421-11 | CARBON | 2.2K | 5% | 1/4W |
| R224 | 1-249-437-11 | CARBON | 47K | 5% | 1/4W (EXCEPT KE200) |
| R225 | 1-249-425-11 | CARBON | 4.7K | 5% | 1/4W (EXCEPT KE200) |
| R231 | 1-249-425-11 | CARBON | 4.7K | 5% | 1/4W (EXCEPT KE200) |
| R232 | 1-247-822-11 | CARBON | 430 | 5% | 1/4W (EXCEPT KE200) |

| Ref. No. | Part No. | Description | | | Remark |
|---|---|---|---|---|---|
| R233 | 1-247-866-11 | CARBON | 30K | 5% | 1/4W (EXCEPT KE200) |
| R234 | 1-249-435-11 | CARBON | 33K | 5% | 1/4W |
| R235 | 1-249-439-11 | CARBON | 68K | 5% | 1/4W |
| R236 | 1-249-410-11 | CARBON | 270 | 5% | 1/4W |
| R241 | 1-249-432-11 | CARBON | 18K | 5% | 1/4W |
| R242 | 1-249-432-11 | CARBON | 18K | 5% | 1/4W |
| R243 | 1-249-423-11 | CARBON | 3.3K | 5% | 1/4W |
| R244 | 1-247-848-11 | CARBON | 5.1K | 5% | 1/4W |
| R245 | 1-249-409-11 | CARBON | 220 | 5% | 1/4W |
| R251 | 1-249-433-11 | CARBON | 22K | 5% | 1/4W |
| R252 | 1-249-417-11 | CARBON | 1K | 5% | 1/4W |
| R253 | 1-249-441-11 | CARBON | 100K | 5% | 1/4W |
| R254 | 1-249-433-11 | CARBON | 22K | 5% | 1/4W |
| R502 | 1-215-452-00 | METAL | 20K | 1% | 1/4W |
| R503 | 1-249-422-11 | CARBON | 2.7K | 5% | 1/4W |
| R504 | 1-215-455-00 | METAL | 27K | 1% | 1/4W |
| R505 | 1-249-417-11 | CARBON | 1K | 5% | 1/4W (EXCEPT KE200) |
| R506 | 1-249-429-11 | CARBON | 10K | 5% | 1/4W (RX300) |
| R507 | 1-249-440-11 | CARBON | 82K | 5% | 1/4W (RX300) |
| R512 | 1-249-421-11 | CARBON | 2.2K | 5% | 1/4W (EXCEPT KE200) |
| R513 | 1-249-441-11 | CARBON | 100K | 5% | 1/4W (EXCEPT KE200) |
| R514 | 1-249-441-11 | CARBON | 100K | 5% | 1/4W (EXCEPT KE200) |
| R515 | 1-249-436-11 | CARBON | 39K | 5% | 1/4W (EXCEPT KE200) |
| R516 | 1-249-425-11 | CARBON | 4.7K | 5% | 1/4W (EXCEPT KE200) |
| R517 | 1-249-433-11 | CARBON | 22K | 5% | 1/4W (EXCEPT KE200) |
| R518 | 1-249-425-11 | CARBON | 4.7K | 5% | 1/4W (EXCEPT KE200) |
| R521 | 1-249-426-11 | CARBON | 5.6K | 5% | 1/4W (KE300.KE400S) |
| R521 | 1-247-852-11 | CARBON | 7.5K | 5% | 1/4W (RX300) |
| R522 | 1-249-426-11 | CARBON | 5.6K | 5% | 1/4W (KE300.KE400S) |
| R522 | 1-247-852-11 | CARBON | 7.5K | 5% | 1/4W (RX300) |
| R523 | 1-247-858-11 | CARBON | 13K | 5% | 1/4W (EXCEPT KE200) |
| R524 | 1-247-852-11 | CARBON | 7.5K | 5% | 1/4W (RX300) |
| R525 | 1-247-854-11 | CARBON | 9.1K | 5% | 1/4W (KE300.KE400S) |
| R525 | 1-249-429-11 | CARBON | 10K | 5% | 1/4W (RX300) |
| R526 | 1-247-854-11 | CARBON | 9.1K | 5% | 1/4W (KE300.KE400S) |

| Ref. No. | Part No. | Description | | | Remark |
|---|---|---|---|---|---|
| R526 | 1-249-429-11 | CARBON | 10K | 5% | 1/4W (RX300) |
| R527 | 1-249-426-11 | CARBON | 5.6K | 5% | 1/4W (EXCEPT KE200) |
| R528 | 1-249-422-11 | CARBON | 2.7K | 5% | 1/4W (EXCEPT KE200) |
| R529 | 1-249-429-11 | CARBON | 10K | 5% | 1/4W |
| R530 | 1-249-421-11 | CARBON | 2.2K | 5% | 1/4W |
| R531 | 1-249-427-11 | CARBON | 6.8K | 5% | 1/4W (KE300,KE400S) |
| R531 | 1-249-426-11 | CARBON | 5.6K | 5% | 1/4W (RX300) |
| R532 | 1-249-433-11 | CARBON | 22K | 5% | 1/4W (KE300,KE400S) |
| R532 | 1-247-862-11 | CARBON | 20K | 5% | 1/4W (RX300) |
| R535 | 1-249-419-11 | CARBON | 1.5K | 5% | 1/4W (KE300,KE400S) |
| R536 | 1-249-421-11 | CARBON | 2.2K | 5% | 1/4W (EXCEPT KE200) |
| R537 | 1-247-866-11 | CARBON | 30K | 5% | 1/4W (EXCEPT KE200) |
| R538 | 1-247-852-11 | CARBON | 7.5K | 5% | 1/4W (EXCEPT KE200) |
| R539 | 1-249-431-11 | CARBON | 15K | 5% | 1/4W (EXCEPT KE200) |
| R540 | 1-247-874-11 | CARBON | 62K | 5% | 1/4W (EXCEPT KE200) |
| R541 | 1-249-429-11 | CARBON | 10K | 5% | 1/4W (EXCEPT KE200) |
| R542 | 1-249-429-11 | CARBON | 10K | 5% | 1/4W (EXCEPT KE200) |
| R543 | 1-249-429-11 | CARBON | 10K | 5% | 1/4W (EXCEPT KE200) |
| R544 | 1-249-429-11 | CARBON | 10K | 5% | 1/4W (EXCEPT KE200) |
| R553 | 1-249-437-11 | CARBON | 47K | 5% | 1/4W |
| R555 | 1-249-427-11 | CARBON | 6.8K | 5% | 1/4W |
| R556 | 1-249-423-11 | CARBON | 3.3K | 5% | 1/4W |
| R557 | 1-249-441-11 | CARBON | 100K | 5% | 1/4W |
| R558 | 1-249-429-11 | CARBON | 10K | 5% | 1/4W |
| R559 | 1-249-441-11 | CARBON | 100K | 5% | 1/4W |
| R560 | 1-249-417-11 | CARBON | 1K | 5% | 1/4W |
| R561 | 1-249-432-11 | CARBON | 18K | 5% | 1/4W |
| R562 | 1-249-436-11 | CARBON | 39K | 5% | 1/4W |
| R563 | 1-247-848-11 | CARBON | 5.1K | 5% | 1/4W (KE200) |
| R564 | 1-247-834-11 | CARBON | 1.3K | 5% | 1/4W (KE200) |
| R565 | 1-249-430-11 | CARBON | 12K | 5% | 1/4W (KE200) |
| R567 | 1-249-433-11 | CARBON | 22K | 5% | 1/4W (KE200) |
| R572 | 1-249-429-11 | CARBON | 10K | 5% | 1/4W |
| R573 | 1-249-429-11 | CARBON | 10K | 5% | 1/4W |

| Ref. No. | Part No. | Description | | | Remark |
|---|---|---|---|---|---|
| R574 | 1-249-435-11 | CARBON | 33K | 5% | 1/4W (EXCEPT KE200) |
| R575 | 1-247-807-31 | CARBON | 100 | 5% | 1/4W |
| R576 | 1-249-435-11 | CARBON | 33K | 5% | 1/4W (KE400S) |
| R577 | 1-249-429-11 | CARBON | 10K | 5% | 1/4W |
| R578 | 1-249-433-11 | CARBON | 22K | 5% | 1/4W |
| R601 | 1-249-419-11 | CARBON | 1.5K | 5% | 1/4W |
| R602 | 1-249-429-11 | CARBON | 10K | 5% | 1/4W |
| R603 | 1-247-807-31 | CARBON | 100 | 5% | 1/4W |
| R604 | 1-249-433-11 | CARBON | 22K | 5% | 1/4W |
| R605 | 1-249-433-11 | CARBON | 22K | 5% | 1/4W |
| R606 | 1-249-430-11 | CARBON | 12K | 5% | 1/4W |
| R607 | 1-249-433-11 | CARBON | 22K | 5% | 1/4W |
| R608 | 1-247-862-11 | CARBON | 20K | 5% | 1/4W |
| R609 | 1-249-429-11 | CARBON | 10K | 5% | 1/4W |
| R701 | 1-249-425-11 | CARBON | 4.7K | 5% | 1/4W |
| R702 | 1-249-419-11 | CARBON | 1.5K | 5% | 1/4W |
| R703 | 1-249-418-11 | CARBON | 1.2K | 5% | 1/4W |
| R704 | 1-249-427-11 | CARBON | 6.8K | 5% | 1/4W |
| R705 | 1-249-419-11 | CARBON | 1.5K | 5% | 1/4W |
| R706 | 1-249-419-11 | CARBON | 1.5K | 5% | 1/4W |
| R707 | 1-249-429-11 | CARBON | 10K | 5% | 1/4W |
| R708 | 1-249-425-11 | CARBON | 4.7K | 5% | 1/4W |
| R709 | 1-249-409-11 | CARBON | 220 | 5% | 1/4W |
| R710 | 1-249-417-11 | CARBON | 1K | 5% | 1/4W |
| R711 | 1-249-427-11 | CARBON | 6.8K | 5% | 1/4W |
| R712 | 1-249-427-11 | CARBON | 6.8K | 5% | 1/4W |
| R713 | 1-249-421-11 | CARBON | 2.2K | 5% | 1/4W |
| R714 | 1-249-425-11 | CARBON | 4.7K | 5% | 1/4W (US,CND,E) |
| R715 | 1-249-421-11 | CARBON | 2.2K | 5% | 1/4W |
| R716 | 1-249-437-11 | CARBON | 47K | 5% | 1/4W |
| R717 | 1-249-429-11 | CARBON | 10K | 5% | 1/4W |
| R718 | 1-247-870-11 | CARBON | 43K | 5% | 1/4W |
| R719 | 1-249-429-11 | CARBON | 10K | 5% | 1/4W |
| R801 | 1-249-417-11 | CARBON | 1K | 5% | 1/4W |
| R802 | 1-249-441-11 | CARBON | 100K | 5% | 1/4W |
| R803 | 1-249-429-11 | CARBON | 10K | 5% | 1/4W |
| R805 | 1-249-434-11 | CARBON | 27K | 5% | 1/4W |
| R806 | 1-249-434-11 | CARBON | 27K | 5% | 1/4W (EXCEPT KE200) |
| R807 | 1-249-434-11 | CARBON | 27K | 5% | 1/4W (EXCEPT KE200) |
| R808 | 1-249-434-11 | CARBON | 27K | 5% | 1/4W (EXCEPT KE200) |
| R809 | 1-249-434-11 | CARBON | 27K | 5% | 1/4W (EXCEPT KE200) |
| R810 | 1-247-807-31 | CARBON | 100 | 5% | 1/4W |
| R811 | 1-247-807-31 | CARBON | 100 | 5% | 1/4W |
| R812 | 1-247-807-31 | CARBON | 100 | 5% | 1/4W |
| R813 | 1-247-807-31 | CARBON | 100 | 5% | 1/4W |
| R814 | 1-247-807-31 | CARBON | 100 | 5% | 1/4W |
| R815 | 1-247-807-31 | CARBON | 100 | 5% | 1/4W |
| R816 | 1-247-807-31 | CARBON | 100 | 5% | 1/4W |
| R820 | 1-247-807-31 | CARBON | 100 | 5% | 1/4W |
| R821 | 1-249-429-11 | CARBON | 10K | 5% | 1/4W |
| R822 | 1-249-429-11 | CARBON | 10K | 5% | 1/4W |
| R823 | 1-249-429-11 | CARBON | 10K | 5% | 1/4W |
| R824 | 1-249-421-11 | CARBON | 2.2K | 5% | 1/4W |
| R825 | 1-249-435-11 | CARBON | 33K | 5% | 1/4W |
| R826 | 1-249-421-11 | CARBON | 2.2K | 5% | 1/4W |
| R827 | 1-249-422-11 | CARBON | 2.7K | 5% | 1/4W |
| R828 | 1-249-422-11 | CARBON | 2.7K | 5% | 1/4W |
| R829 | 1-249-422-11 | CARBON | 2.7K | 5% | 1/4W |
| R830 | 1-249-429-11 | CARBON | 10K | 5% | 1/4W |
| R831 | 1-249-429-11 | CARBON | 10K | 5% | 1/4W |
| R832 | 1-249-437-11 | CARBON | 47K | 5% | 1/4W |
| R833 | 1-249-437-11 | CARBON | 47K | 5% | 1/4W |
| R901 | 1-249-420-11 | CARBON | 1.8K | 5% | 1/4W |
| R902 | 1-249-423-11 | CARBON | 3.3K | 5% | 1/4W |
| R903 | 1-249-426-11 | CARBON | 5.6K | 5% | 1/4W |
| R904 | 1-249-429-11 | CARBON | 10K | 5% | 1/4W |
| R905 | 1-249-435-11 | CARBON | 33K | 5% | 1/4W |
| R906 | 1-249-420-11 | CARBON | 1.8K | 5% | 1/4W |
| R907 | 1-249-423-11 | CARBON | 3.3K | 5% | 1/4W |
| R908 | 1-249-426-11 | CARBON | 5.6K | 5% | 1/4W |
| R909 | 1-249-429-11 | CARBON | 10K | 5% | 1/4W (RX300) |
| R910 | 1-249-435-11 | CARBON | 33K | 5% | 1/4W (RX300) |
| R912 | 1-247-807-31 | CARBON | 100 | 5% | 1/4W |
| R913 | 1-249-429-11 | CARBON | 10K | 5% | 1/4W |
| R921 | 1-249-430-11 | CARBON | 12K | 5% | 1/4W (KE400S) |
| R921 | 1-247-836-11 | CARBON | 1.6K | 5% | 1/4W (EXCEPT KE400S) |
| R922 | 1-249-427-11 | CARBON | 6.8K | 5% | 1/4W (KE400S) |
| R922 | 1-249-421-11 | CARBON | 2.2K | 5% | 1/4W (EXCEPT KE400S) |
| R923 | 1-249-423-11 | CARBON | 3.3K | 5% | 1/4W |
| R924 | 1-247-868-11 | CARBON | 36K | 5% | 1/4W (KE400S) |
| R924 | 1-249-427-11 | CARBON | 6.8K | 5% | 1/4W (KE300,RX300) |
| R925 | 1-247-836-11 | CARBON | 1.6K | 5% | 1/4W (KE400S) |
| R926 | 1-249-421-11 | CARBON | 2.2K | 5% | 1/4W (KE400S) |

< VARIABLE RESISTOR >

| | | |
|---|---|---|
| RV111 | 1-241-630-11 | RES, ADJ, CARBON 10K (RECORD LEVEL L) |
| RV211 | 1-241-630-11 | RES, ADJ, CARBON 10K (RECORD LEVEL R) |
| RV901 | 1-223-604-11 | RES, VAR, CARBON 10K/10K (REC LEVEL) |
| RV902 | 1-223-605-11 | RES, VAR, CARBON 20K/20K (BALANCE) |

| Ref. No. | Part No. | Description | Remark |
|---|---|---|---|
| | | < SWITCH > | |
| S901 | 1-554-303-21 | SWITCH, TACTILE (❚❚ PAUSE) | |
| S902 | 1-554-303-21 | SWITCH, TACTILE (◀◀ ▷ AMS ▶▶) | (RX300) |
| S903 | 1-554-303-21 | SWITCH, TACTILE (◀◀ ▷ AMS ▶▶) | (EXCEPT RX300) |
| S904 | 1-554-303-21 | SWITCH, TACTILE (◀◀ ▷ AMS ▶▶) | (RX300) |
| S905 | 1-554-303-21 | SWITCH, TACTILE (○ REC MUTE) | |
| S906 | 1-554-303-21 | SWITCH, TACTILE (RESET) | |
| S907 | 1-554-303-21 | SWITCH, TACTILE (MEMORY) | |
| S908 | 1-554-303-21 | SWITCH, TACTILE (■) | |
| S909 | 1-554-303-21 | SWITCH, TACTILE (◀◀) | |
| S910 | 1-554-303-21 | SWITCH, TACTILE (▶▶) | |
| S911 | 1-554-303-21 | SWITCH, TACTILE (● REC) | |
| S912 | 1-762-567-11 | SWITCH, SLIDE (DIRECTION) (RX300) | |
| S921 | 1-554-303-21 | SWITCH, TACTILE (AUTO CAL) (EXCEPT KE200) | |
| S922 | 1-762-647-11 | SWITCH, ROTARY (DOLBY NR) (KE400S) | |
| S922 | 1-762-641-11 | SWITCH, ROTARY (DOLBY NR) (KE300,RX300) | |
| S922 | 1-762-640-11 | SWITCH, ROTARY (DOLBY NR) (KE200) | |
| ⚠S930 | 1-762-581-11 | SWITCH, AC POWER PUSH (1 KEY) (POWER) | (EXCEPT US,CND,E) |
| S931 | 1-762-580-11 | SWITCH, PUSH (1 KEY) (POWER) (US,CND,E) | |
| | | < TRANSFORMER > | |
| ⚠T901 | 1-426-651-11 | TRANSFORMER,POWER (KE200,KE300: | EXCEPT E) |
| ⚠T901 | 1-426-652-11 | TRANSFORMER,POWER (KE300:E) | |
| ⚠T901 | 1-427-743-11 | TRANSFORMER,POWER (RX300) | |
| ⚠T901 | 1-427-751-11 | TRANSFORMER,POWER (KE400S:EXCEPT US) | |
| ⚠T901 | 1-427-752-11 | TRANSFORMER,POWER (KE400S:US) | |
| | | < TEST PIN > | |
| * TP801 | 1-560-060-00 | PIN, CONNECTOR 2P | |
| | | < VIBRATOR > | |
| X801 | 1-577-360-11 | VIBRATOR, CERAMIC (6MHz) | |

**********

MISCELLANEOUS
**********

| Ref. No. | Part No. | Description | Remark |
|---|---|---|---|
| ⚠9 | 1-569-007-11 | ADAPTER, CONVERSION 2P (KE300:E) | |
| 56 | 1-773-287-11 | WIRE (FLAT TYPE) (29 CORE) | |
| 61 | 1-765-318-11 | WIRE (FLAT TYPE) (7 CORE) | |
| 67 | 1-769-947-11 | WIRE (FLAT TYPE) (11 CORE) | |
| ⚠CNP901 | 1-558-945-21 | CORD, POWER (POLAR.SPT-1) | |
| ⚠CNP901 | 1-575-651-21 | CORD, POWER (AEP,G,MY,SP) | |
| ⚠CNP901 | 1-696-027-11 | CORD, POWER (E) | |
| ⚠CNP901 | 1-696-845-11 | CORD, POWER (AUS) | |
| ⚠CNP901 | 1-751-523-11 | CORD, POWER (UK) | |
| FL901 | 1-517-173-11 | INDICATOR TUBE, FLUORESCENT | (KE200,KE300,RX300) |
| FL901 | 1-517-374-11 | INDICATOR TUBE, FLUORESCENT (KE400S) | |
| HE901 | 1-543-673-11 | HEAD, MAGNETIC (ERASE) (EXCEPT RX300) | |
| HRP901 | 1-543-919-11 | HEAD,MAGNETIC (RECORD/PLAYBACK) | (EXCEPT RX300) |
| HRPE901 | A-2004-527-A | DECK ASSY, HEAD (RECORD/PLAYBACK/ERASE) | (RX300) |
| M901 | X-3363-501-2 | MOTOR ASSY,REEL (REEL) | |
| M902 | X-3365-377-2 | MOTOR ASSY,CAPSTAN (CAPSTAN) | |
| ⚠S701 | 1-570-046-21 | SWITCH, VOLTAGE CHANGE (E) | |
| ⚠T901 | 1-426-651-11 | TRANSFORMER, POWER | (KE200,KE300:EXCEPT E) |
| ⚠T901 | 1-426-652-11 | TRANSFORMER, POWER (KE300:E) | |
| ⚠T901 | 1-427-743-11 | TRANSFORMER, POWER (RX300) | |
| ⚠T901 | 1-427-751-11 | TRANSFORMER, POWER (KE400S:EXCEPT US) | |
| ⚠T901 | 1-427-752-11 | TRANSFORMER, POWER (KE400S:US) | |

**********

ACCESSORIES & PACKING MATERIALS
**********

| Ref. No. | Part No. | Description | Remark |
|---|---|---|---|
| | 1-551-734-11 | CORD, CONNECTION | |
| | 3-856-130-11 | MANUAL, INSTRUCTION (ENGLISH/FRENCH) | (RX300) |
| | 3-856-134-11 | MANUAL, INSTRUCTION (ENGLISH/FRENCH/ | SPANISH/PORTUGUESE) (AEP) |
| | 3-856-134-21 | MANUAL, INSTRUCTION (ENGLISH) | (US,UK,AUS) |
| | 3-856-134-31 | MANUAL, INSTRUCTION (GERMAN/DUTCH/ | SWEDISH/ITALIAN)(AEP) |
| | 3-856-134-41 | MANUAL, INSTRUCTION (GERMAN) (G) | |
| | 3-856-134-51 | MANUAL, INSTRUCTION (ENGLISH,FRENCH, | SPANISH,CHINESE) (E,MY,SP) |
| * | 3-931-693-01 | INDIVIDUAL CARTON (KE400S:US,AUS) | |
| * | 3-932-083-01 | CUSHION | |
| * | 3-935-033-01 | INDIVIDUAL CARTON (KE200) | |
| * | 3-935-034-01 | INDIVIDUAL CARTON (KE300:AEP,G,MY,SP) | |
| * | 3-935-035-01 | INDIVIDUAL CARTON (KE400S:AEP,UK,G) | |
| * | 3-935-036-01 | INDIVIDUAL CARTON (RX300) | |
| * | 3-935-090-01 | INDIVIDUAL CARTON (KE300:E,AUS) | |

**********

**********
## HARDWARE LIST
**********

| Ref. No. | Part No. | Description | Remark |
|---|---|---|---|
| #1 | 7-682-548-04 | SCREW +BVTT 3X8 (S) | |
| #2 | 7-685-871-01 | SCREW +BVTT 3X6 (S) | |
| #3 | 7-685-872-09 | SCREW +BVTT 3X8 (S) | |
| #4 | 7-685-646-79 | SCREW +BVTP 3X8 TYPE2 N-S | |
| #5 | 7-685-862-09 | SCREW +BVTT 2.6X6 (S) | |
| #6 | 7-685-134-19 | SCREW (+ PTPWH) (2.6X8) | |
| #7 | 7-621-775-00 | SCREW +B 2.6X3 | |
| #8 | 7-627-556-08 | SCREW +P 2.6X2.8 | |
| #9 | 7-621-772-58 | SCREW (+B2X10) (EXCEPT RX300) | |

| | |
|---|---|
| The components identified by mark ⚠ or dotted line with mark ⚠ are critical for safety.<br>Replace only with part number specified. | Les composants identifiés par une marque ⚠ sont critiques pour la sécurité.<br>Ne les remplacer que par une pièce portant le numéro spécifié. |

Sony Corporation
Consumer A&V Products Company
Home A&V Products Div.

9-960-660-11

## REVISION HISTORY

Clicking the version allows you to jump to the revised page.
Also, clicking the version at the upper right on the revised page allows you to jump to the next revised page.

| Ver. | Date | Description of Revision |
|---|---|---|
| 1.1 | 2001.05 | Silver model added for TC-KE400S. (SFD-01006) |
| 1.0 | 1996.04 | New. |
| | | |
| | | |
| | |