# TC-K80II

AEP Model
Canadian Model
E Model

## STEREO CASSETTE DECK

## SPECIFICATIONS

### GENERAL

**Power Requirements:** 120 V ac, 60 Hz (Canadian model)
220 or 240 V ac ~, 50/60 Hz (AEP model)
110, 120, 220, 240 V ac adjustable, 50/60 Hz (E model)

**Power Consumption:** 27 W (Canadian model)
30 W (AEP, E model)

**AC Outlet:** 1 unswitched, 300 W (Canadian model)

**Dimensions:** Canadian model:
Approx.
460 (w) x 160 (h) x 295 (d) mm
18 1/8 (w) x 6 1/4 (h) x 11 5/8 (d) inches
AEP, E model:
Approx.
430 (w) x 160 (h) x 295 (d) mm
17 (w) x 6 1/4 (h) x 11 5/8 (d) inches
Including projecting parts and controls

**Weight:** Approx. 9.2 kg, 20 lb 5 oz (Canadian model)
Approx. 8.5 kg, 18 lb 12 oz (AEP, E model)

**Track:** 4-track 2-channel stereo

**Fast Forward and Rewind Time:** Approx. 80 seconds with Sony cassette C-60

**Overall Frequency Response:** DOLBY NR OFF:
With TYPE IV cassette (Sony METALLIC)
20 – 19,000 Hz
30 – 17,000 Hz (± 3 dB)
30 – 13,000 Hz (± 3 dB, 0VU recording)
With TYPE III cassette (Sony Fe-Cr)
20 – 19,000 Hz
30 – 17,000 Hz (± 3 dB)
With TYPE II cassette (Sony EHF)
20 – 18,000 Hz
30 – 16,000 Hz (± 3 dB)

– Continued on page 2 –

'**Dolby**' and the double-D symbol are the trade marks of Dolby Laboratories. Noise reduction system manufactured under license from Dolby Laboratories.

SAFETY-RELATED COMPONENT WARNING!!
COMPONENTS IDENTIFIED BY SHADING AND MARK ⚠ ON THE SCHEMATIC DIAGRAMS, EXPLODED VIEWS AND IN THE PARTS LIST ARE CRITICAL TO SAFE OPERATION. REPLACE THESE COMPONENTS WITH SONY PARTS WHOSE PART NUMBERS APPEAR AS SHOWN IN THIS MANUAL OR IN SUPPLEMENTS PUBLISHED BY SONY.

ATTENTION AU COMPOSANT AYANT RAPPORT À LA SÉCURITÉ!
LES COMPOSANTS IDENTIFIÉS PAR UNE TRAME ET UNE MARQUE ⚠ SUR LES DIAGRAMMES SCHÉMATIQUES, LES VUES EXPLOSÉES ET LA LISTE DES PIÈCES SONT CRITIQUES POUR LA SÉCURITÉ DE FONCTIONNEMENT. NE REMPLACER CES COMPOSANTS QUE PAR DES PIÈCES SONY DONT LES NUMÉROS SONT DONNÉS DANS CE MANUEL OU DANS LES SUPPLÉMENTS PUBLIÉS PAR SONY.

SONY®

# SERVICE MANUAL

www.hifiengine.com

With TYPE I cassette (Sony HFX)
20 – 16,000 Hz
30 – 14,000 Hz (± 3 dB)

**Wow and Flutter:** 0.03 % (RMS) weighted (NAB)
± 0.1 % (DIN)

**Overall S/N Ratio:** DOLBY NR OFF:
60 dB at peak level with TYPE III cassette (Sony Fe-Cr)
58 dB at peak level with TYPE II cassette (Sony EHF)
DOLBY NR ON:
Improved by 5 dB at 1 kHz, 10 dB above 5 kHz

**Overall Distortion:** 0.9 % with Sony Fe-Cr cassette

**Record Bias Frequency:** 105 kHz

**Inputs:** MIC (two phone jacks)
Maximum sensitivity: 0.25 mV (–70 dB)
Impedance: for low-impedance microphone
LINE IN (two phono jacks)
Maximum sensitivity: 77.5 mV (–20 dB)
Impedance: 47 – 50 kΩ
REC/PB (connector) (AEP, E model)
Input impedance: 10 kΩ or less

**Outputs:** LINE OUT (two phono jacks)
Normal level: 0.435 V (–5 dB)
Load impedance: 50 kΩ
HEADPHONES (stereo-binaural jack)
Output level: 1.9 mV – 62 mV (–52 to –22 dB)
Load impedance: 8 Ω
REC/PB (connector) (AEP, E model)
Output impedance: 10 kΩ or less

**Liquid Crystal Peak Program Meters:** Response range: –40 dB to +8 dB
Frequency response: 20 – 20,000 Hz ±1.5 dB
Response time: 1 millisecond
Decay time (from 0 dB to –20 dB): 750 milliseconds
Overshoot: None
Indicator elements: 33 elements for each channel

## MODEL IDENTIFICATION
### (Specification Label)

**Canadian Model:**

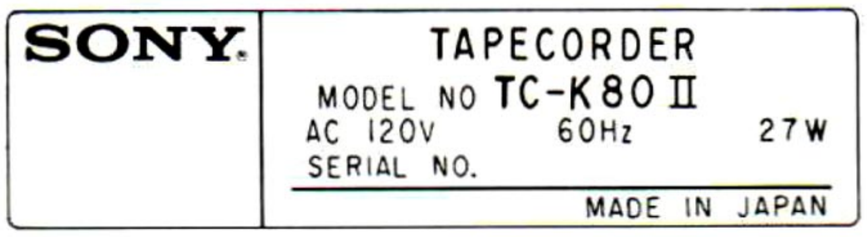


**AEP Model:**

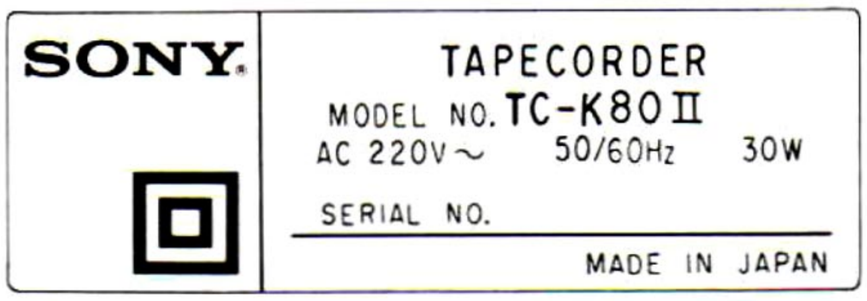


**E Model:**

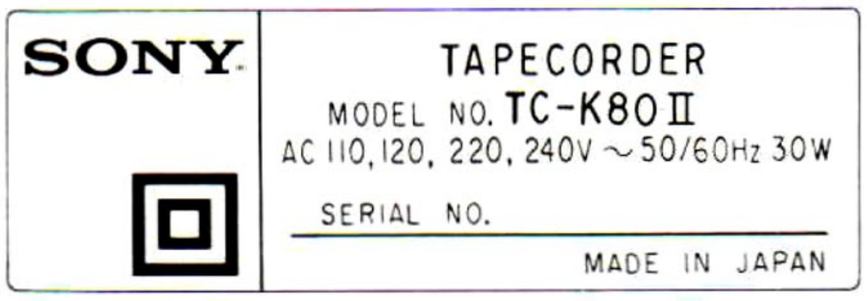




www.hifiengine.com

# SECTION 1
# OUTLINE

## 1-1. HANDLING PRECAUTIONS FOR MOS ICs (ICs 002, 101, 201, 801–803, 805, 806)

Generally, the insulation resistance of the oxide layer in MOS IC structures is very high, and the oxide layer is very thin. Because of this, it is possible that the static voltages usually present on clothes and the human body will be enough to generate a potential difference across the insulator, high enough to cause a breakdown of the insulating layer.

The following precautions should be taken while handling these ICs.

(Particular care should be taken under conditions of low humidity.)

### Precautions in Replacing MOS ICs

1. Store new ICs by inserting them into a urethane-polyester cushion (which is somewhat conductive), or wrapping it in aluminum foil, so that all the pins are at the same potential.
   (The ICs should be stored in that manner until mounted on the circuit board.)

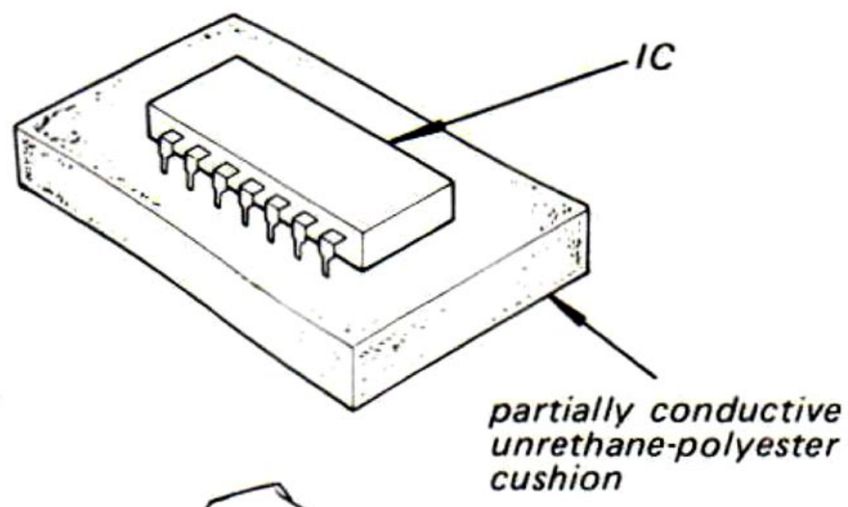


Fig. A

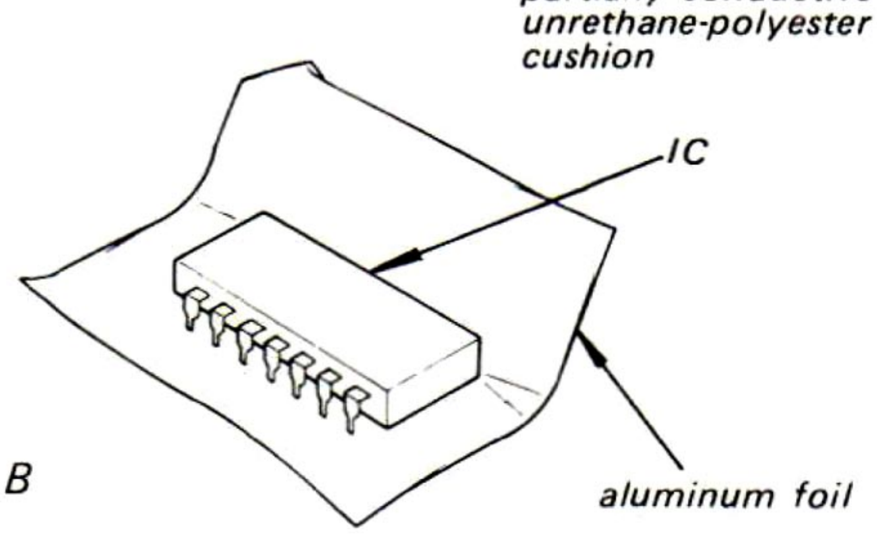


Fig. B

2. Check the soldering iron for possible power-line leakage current. Make sure that there is no leakage path by connecting an ohmmeter to the tip of the soldering iron and the plug as shown in Fig. C. If there is a leakage path, use some other soldering iron.

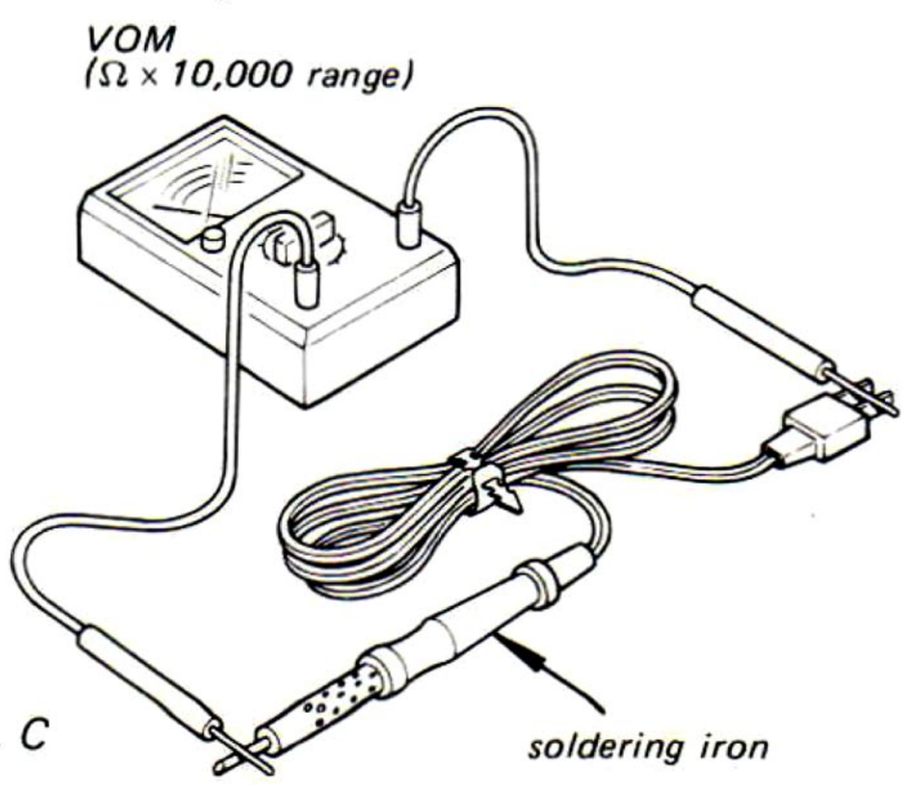


Fig. C

3. Equalize any potential difference between the clothes, the tools in use, the work bench, the set being worked on, and the packaged IC by touching them all in succession with the hands or a conductive wire or tool.
4. The following are effective methods for handling ICs that remove the potential difference across the oxide layer.
   - Use a paper clip modified by soldering in a wire braid insert.

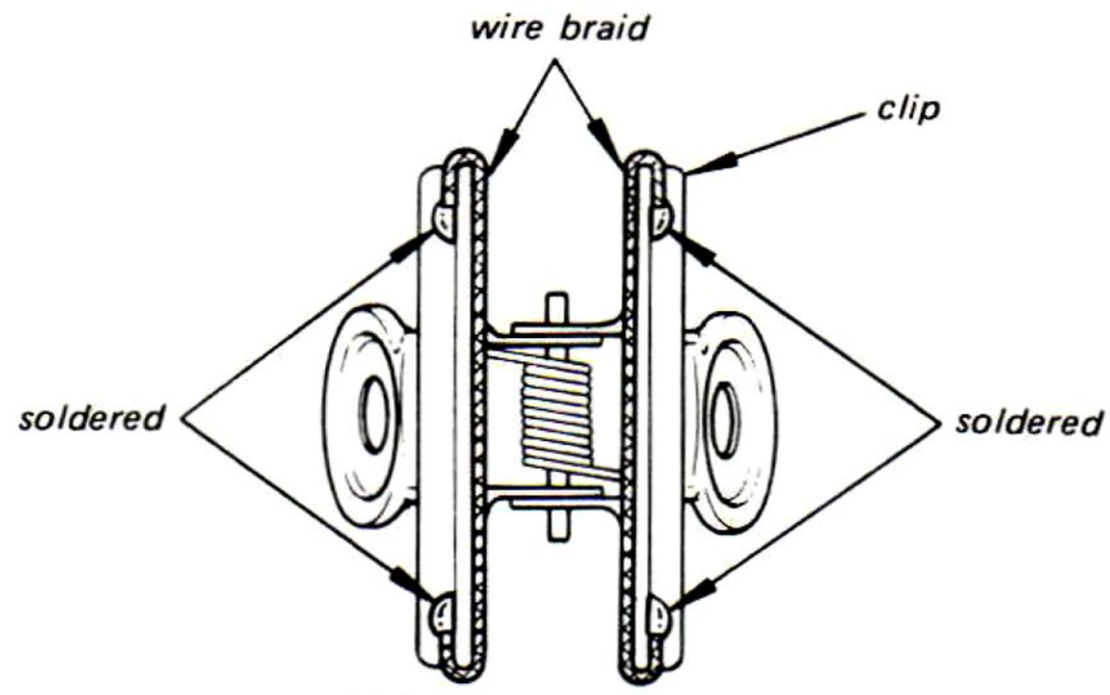


Fig. D

Make sure that there is no solder on the inside.

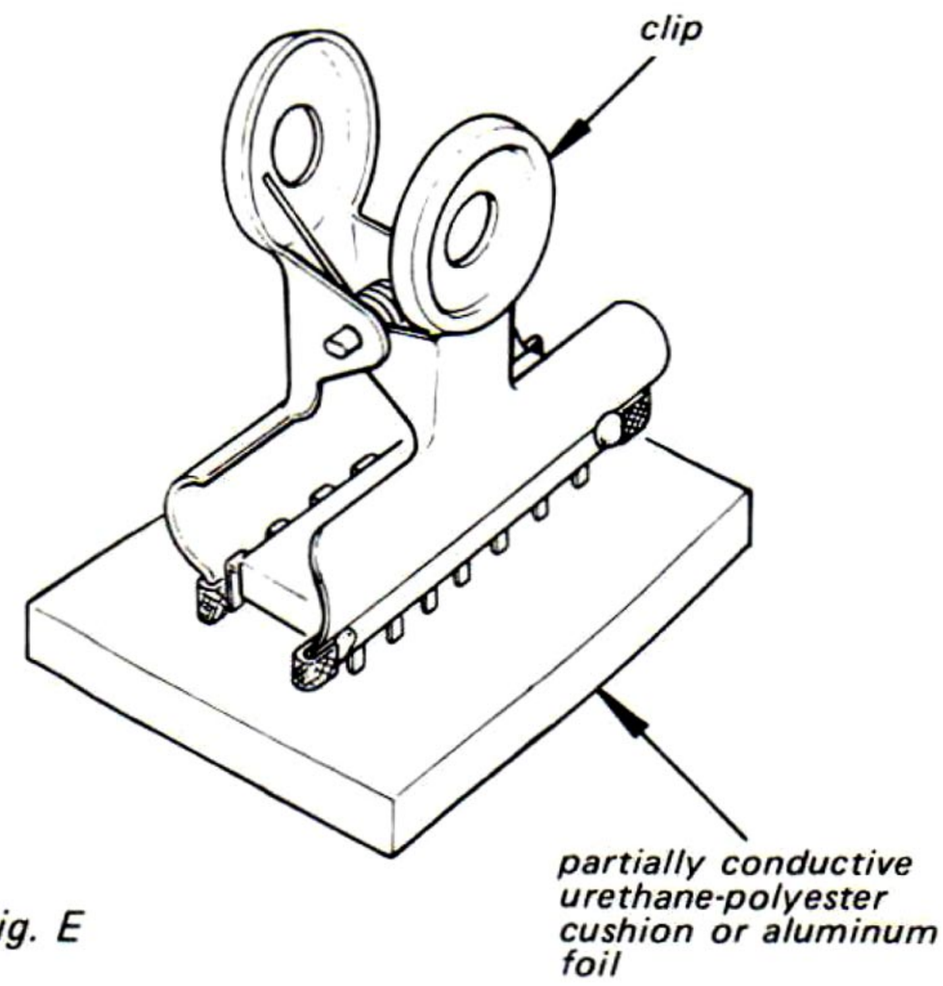


Fig. E

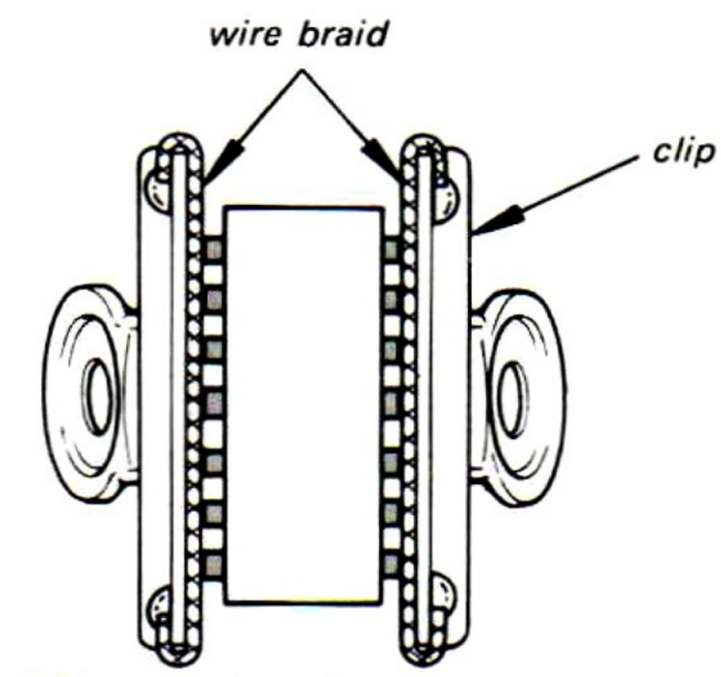


Fig. F

Make sure that all the pins are in contact with the wire braid (all the pins will then be at the same potential.).



www.hifiengine.com

- Take a short length of fine bare wire and wind it around the IC so that it shorts all the pins of the IC, while it is still in the urethane-polyester cushion or aluminum foil. This ensures that all the pins are at the same potential.

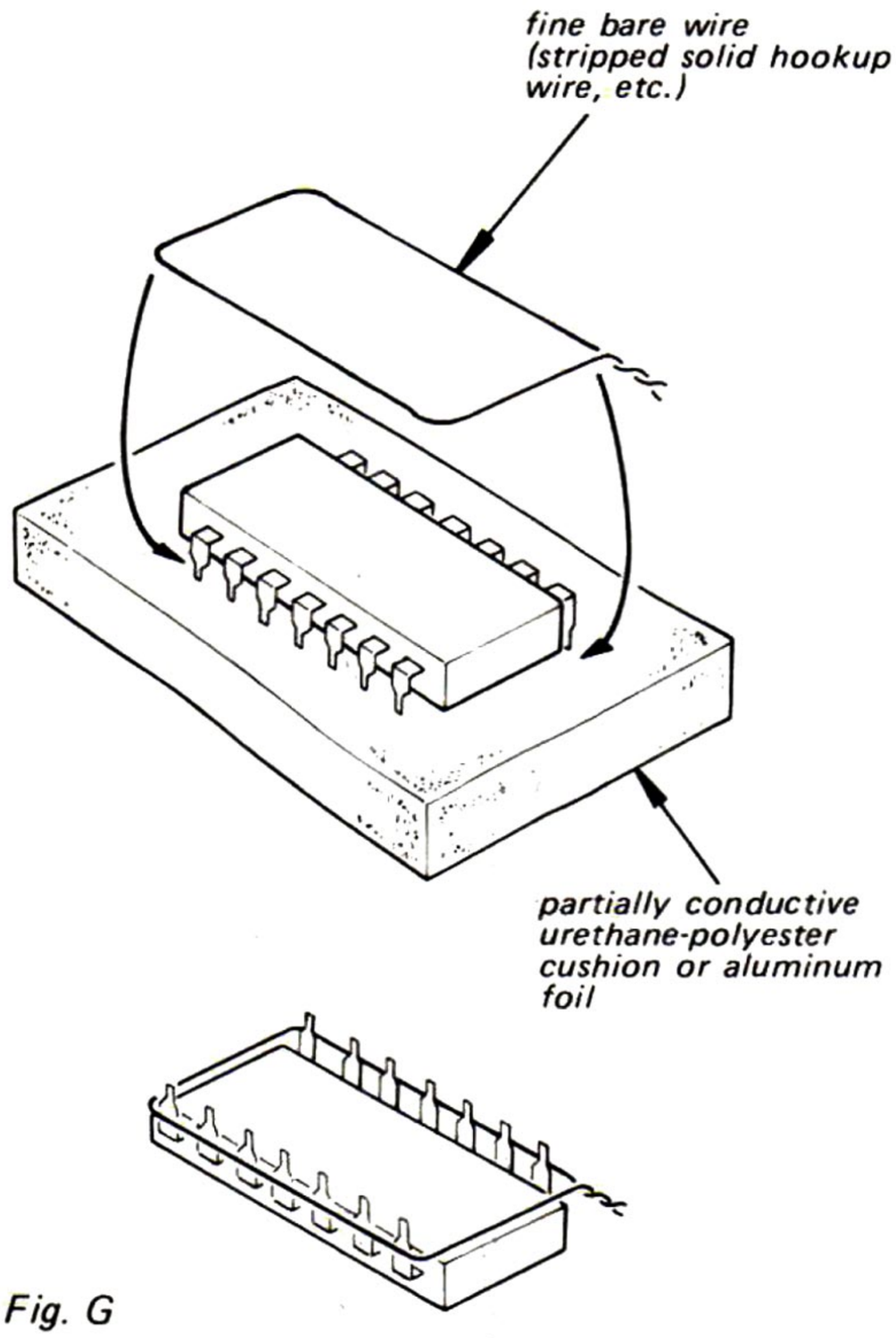


*Fig. G*

- When it is necessary to handle the IC with the fingers, do not touch any pin, and hold the IC at the ends of its plastic-package case as shown in Fig. H.

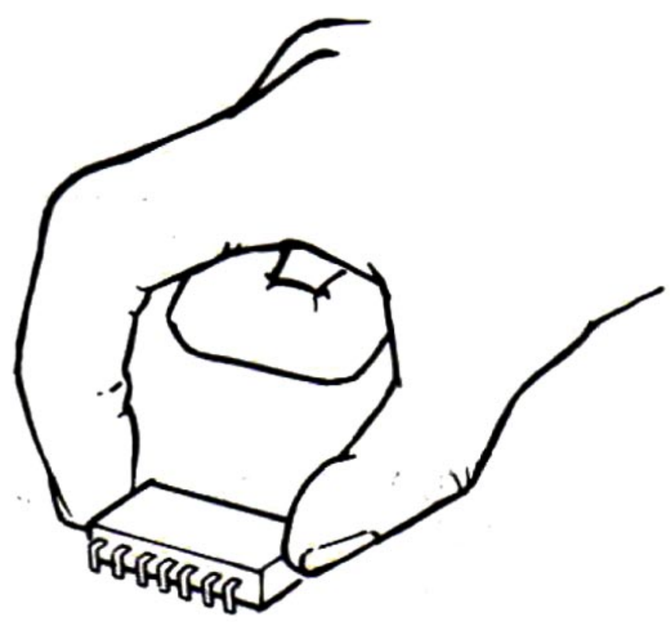

*Fig. H*

5. Method of Mounting
   Insert the IC while holding it with the modified clip, and solder all the pins with the clip still shorting the pins. (Similarly, solder all the pins while the bare shorting wire is still wound around them.). Remove the clip or the bare shorting wire only after all the pins have been soldered.

**Precaution while Checking C-MOS ICs**

The C-MOS ICs (Complementary MOS) are MOS ICs that have their output sections made up of N-channel and P-channel push-pull stages to increase their speed of operation. If the output terminal of these ICs comes into contact with B+ or B– voltage, then the FET which is ON at that time will either become shorted or open.

This is valid for all the output sections that are connected together by the interconnections. Even the circuits that are physically separated (and not on the same board) can be destroyed simultaneously.

**Example:**

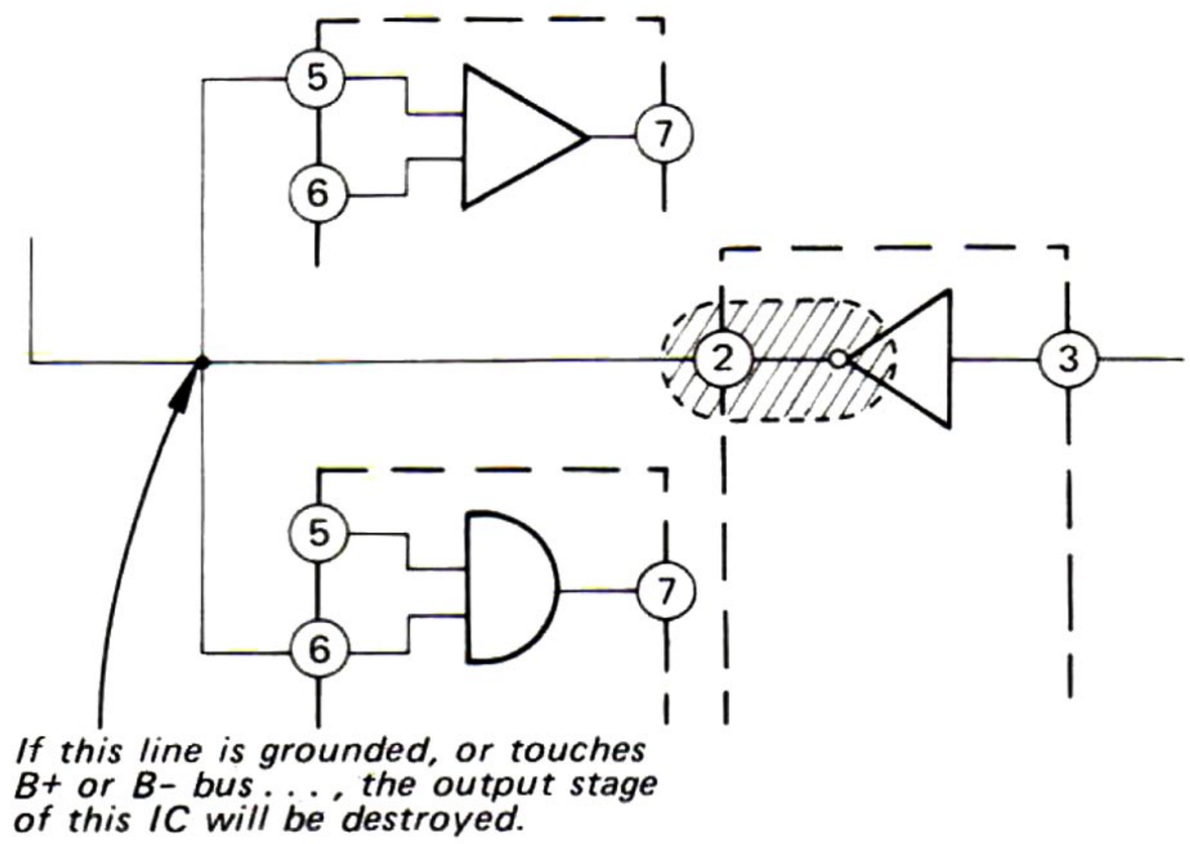


*Fig. I*



www.hifiengine.com

## 1-2. ON THE SONY® METALLIC TAPE CASSETTE

The SONY® metallic tape cassette is a remarkably improved tape when compared with the conventional ones. The SONY® metallic tape cassette uses a newly developed and fine-grained magnetic power which does not include oxyeon molecule.

The features of this tape cassette are:

a) superior linearity with a more-widened dynamic range

b) more-improved sensitivity and high-level recording made easy with more-than-sufficient signal-to-noise ratio

c) improved MOL (maximum output level) characteristics in the high-frequency region with an excellent frequency response

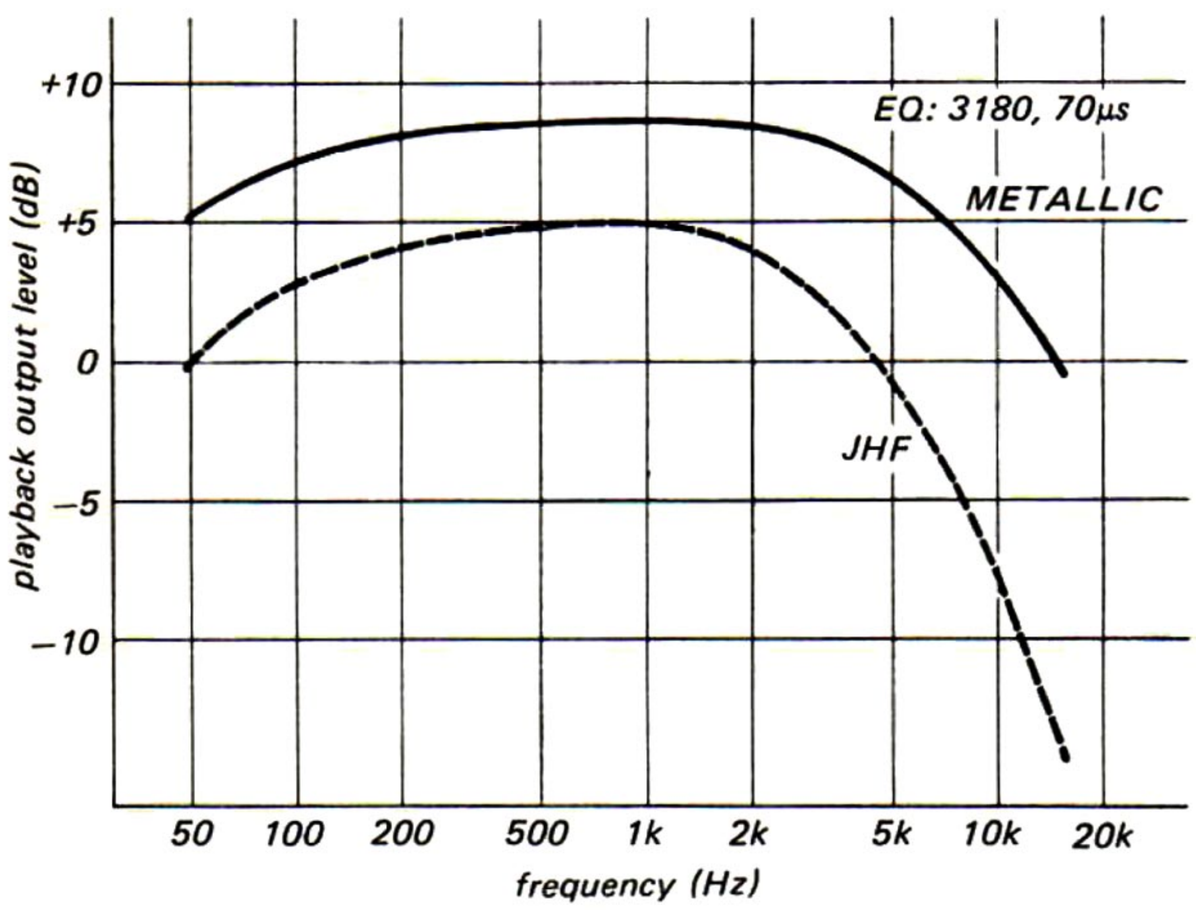


*Fig. 1 MOL (maximum output level) Characteristics*

To make the best use of this metallic tape cassette, this set is well equipped with metallic-tape oriented switch positions for the record bias and equalizer, and with an S & F (Sendust and Ferrite) head.

## 1-3. ON THE RECORD/PLAYBACK HEAD

This set uses a newly developed "S & F" (Sendust and Ferrite) record/playback head as shown in Fig. 2.

*Fig. 2*

This head succeeds to the following features of the conventional F & F head and the Sendust and Ferrite are combined to improve the performance of the time-proven F & F head.

a) not affected by temperature, humidity and long-time use (long life)

b) not one-side, but uniform wearing

c) very-sharp gap edge

d) good high-frequency performance

e) less dust gathering

The Sendust is an alloy of iron, aluminum and silicon. This alloy is a harder materials for head than the conventionally used permalloy, and the wearing amount due to the tape travel is very little as shown in Fig. 3.

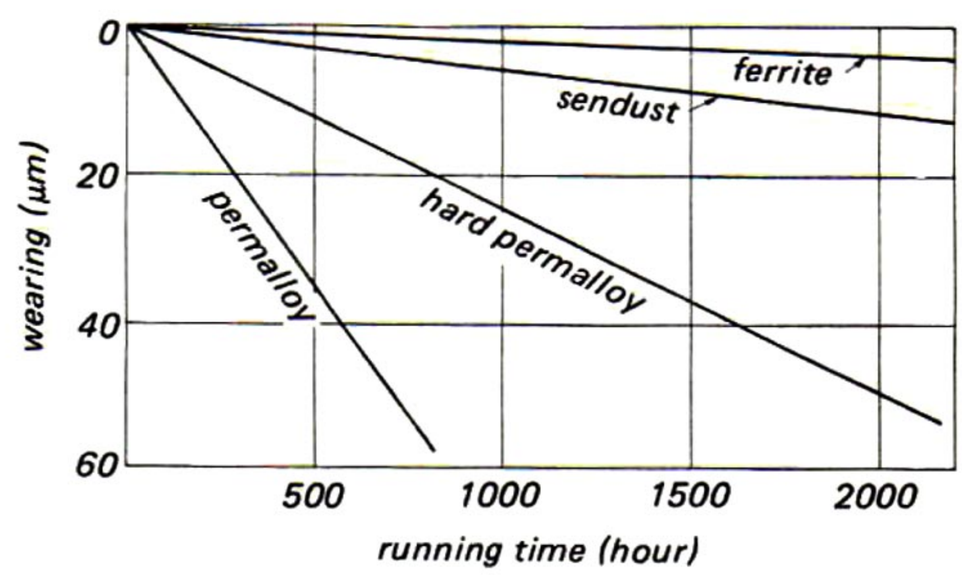


*Fig. 3*

The Sendust is a very convenient material for head because its saturated flux density and permeability are high. Table 1 shows the material characteristics of F & F and S & F heads.

*Table 1*

| Head material | Permeability (at 0.3kHz) | Saturated flux density (in gauss) | Coercivity (in oersted) | Resistivity (in Ω-cm) |
|---|---|---|---|---|
| ferrite (F & F) | 10,000 | 4,300 | 0.03 | 4 |
| Sendust (S & F) | 4,900 | 8,100 | 0.05 | 0.0001 |

As can be understood from the table, the Sendust's saturated flux density is very larger than the ferrite's. So, when the Sendust is used for the record/playback head, the linearity is very good due to its hard-to-saturate (magnetically) characteristics.



www.hifiengine.com

### 1-3-1. Structure of S & F Head

The gap section which is the most important part of the head is shown in Fig. 4. The hard quartz is strongly attached to the gap of the Sendust core by using a special evaporation method. Then the hard quartz and the Sendust core are brazed together by a melted special metal which is mechanically strong, and a sharp gap and gap edge are obtained.

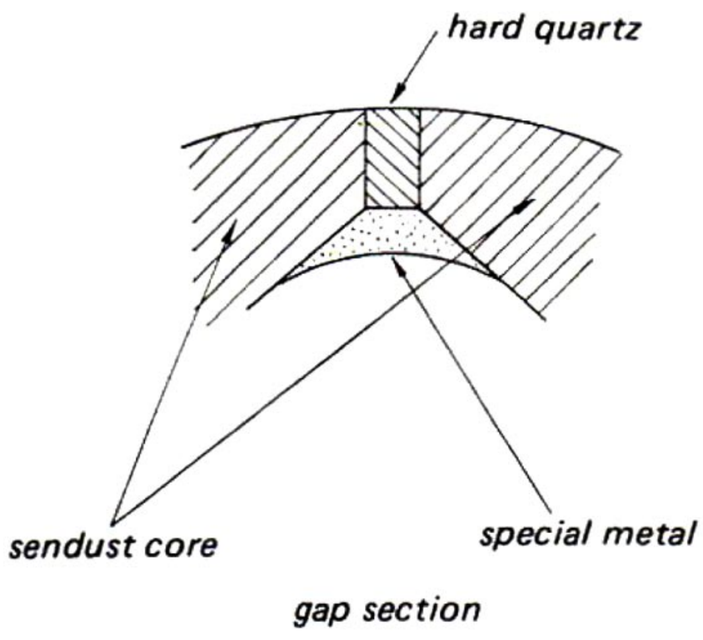


*Fig. 4*

The head surface on which the tape contacts is made of the Sendust in almost all areas and no one-side wearing of the head takes place even after a long-time usage.

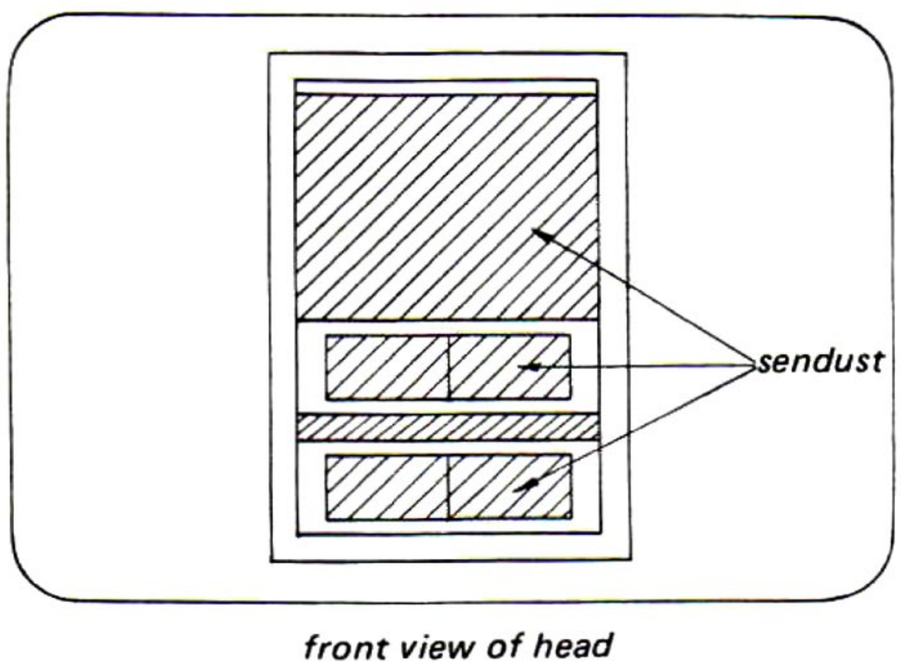


*Fig. 5*

The innards of the head comprises a three-hold construction of the (Sendust) – (ferrite) – (ferrite) configuration as shown in Fig. 6.

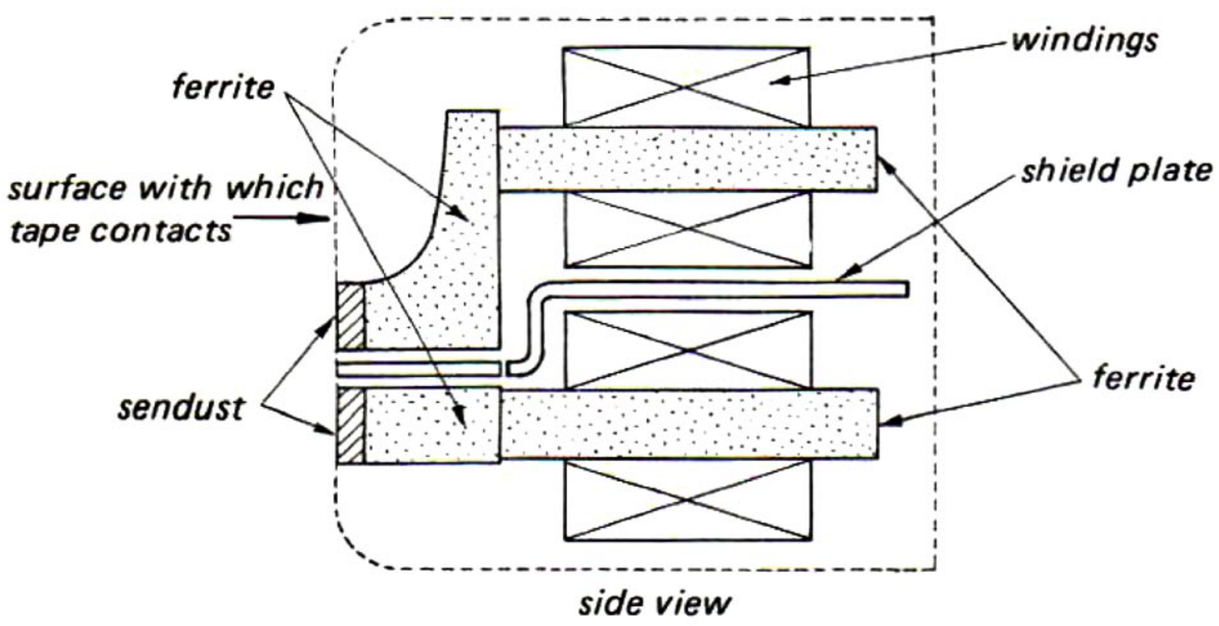


*Fig. 6*

### 1-3-2. Performance of S & F Head

a) Generally, the gap's length of a head is as short as possible to obtain a maximum gain in the higher-frequency region. This is clearly shown in Fig. 7 below.

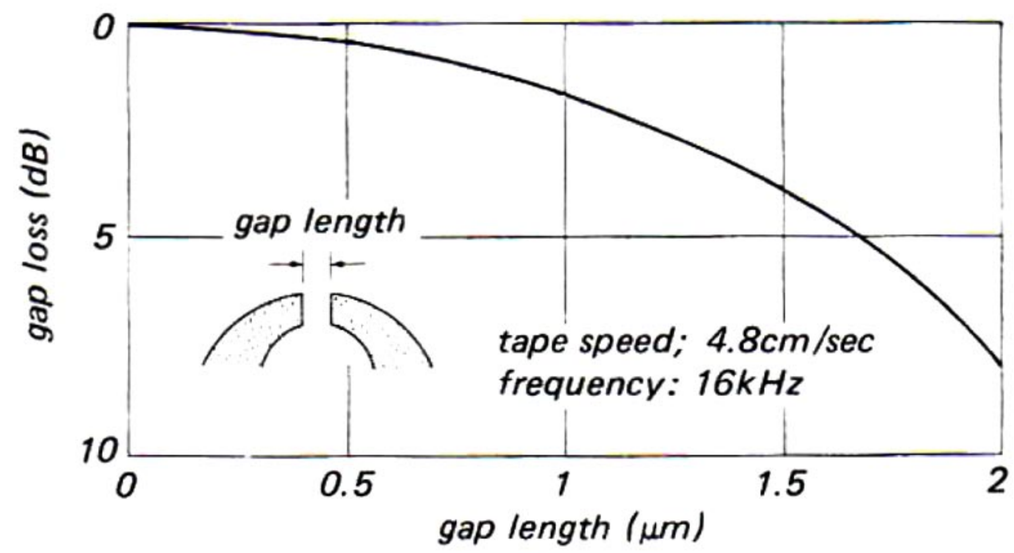


*Fig. 7*

On the contrary, the linearity and distortion factor degrade as the gap becoms, shorter. The S & F head uses the Sendust in the front section and a large cross-sectional area of ferrite in the rear section as shown in Fig. 6 above. Accordingly, the linearity and distortion factor retain a margin which makes the gap's length as short as possible. Thus the gap loss is reduced and the response in the high-frequency region is improved.

b) These metallic magnetic materials such as the Sendust and permalloy apt to degrade in the high-frequency response due to the flow of the eddy current. In many cases, these materials are processed to thin sheet metal and laminated to reduce the degradation in the high-frequency response. Fig. 8 shows the core loss vs. frequency curves of the four kinds of head, i.e., laminated Sendust, laminated permalloy, S & F and ferrite heads.

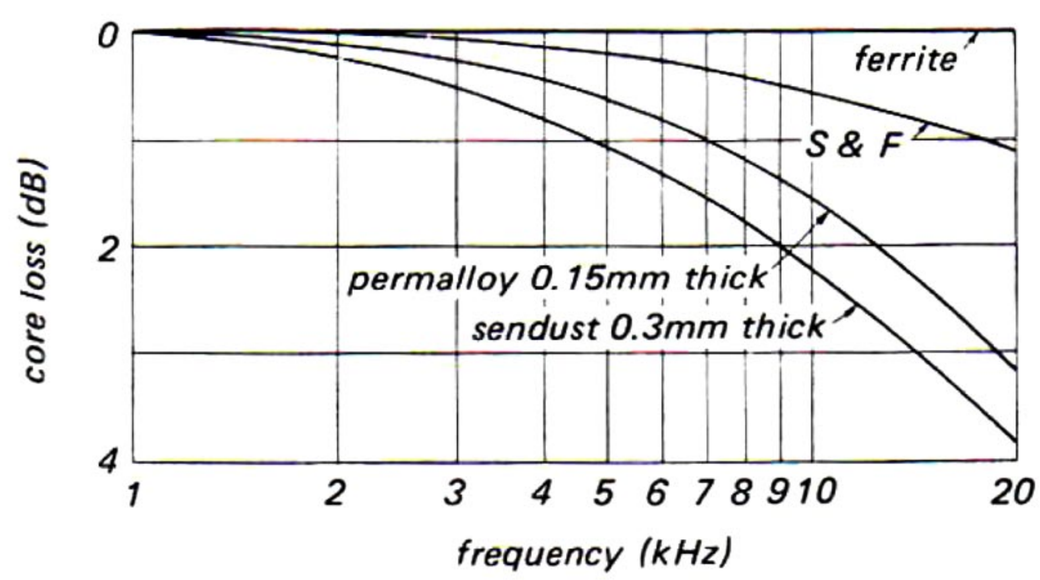


*Fig. 8*

As can be understood from Fig. 8, the laminated Sendust and laminated permalloy heads still have a large amount of core loss. The ferrite head has almost no loss on the contrary. The S & F head has a less core loss than the first two because most part of its magnetic circuit is made of ferrite and the frequency response is very good.



www.hifiengine.com

## 1-4. CIRCUIT DESCRIPTION

### System Control Circuit

The sustem-control circuit of this tape recorder employs a single-chip microcomputer (μPD547-027). Receiving input signals from various controls or control switches of this recorder, the microcomputer delivers signals for driving the solenoid, reel motor, capstan motor, etc. in order to make the selection between operational modes.

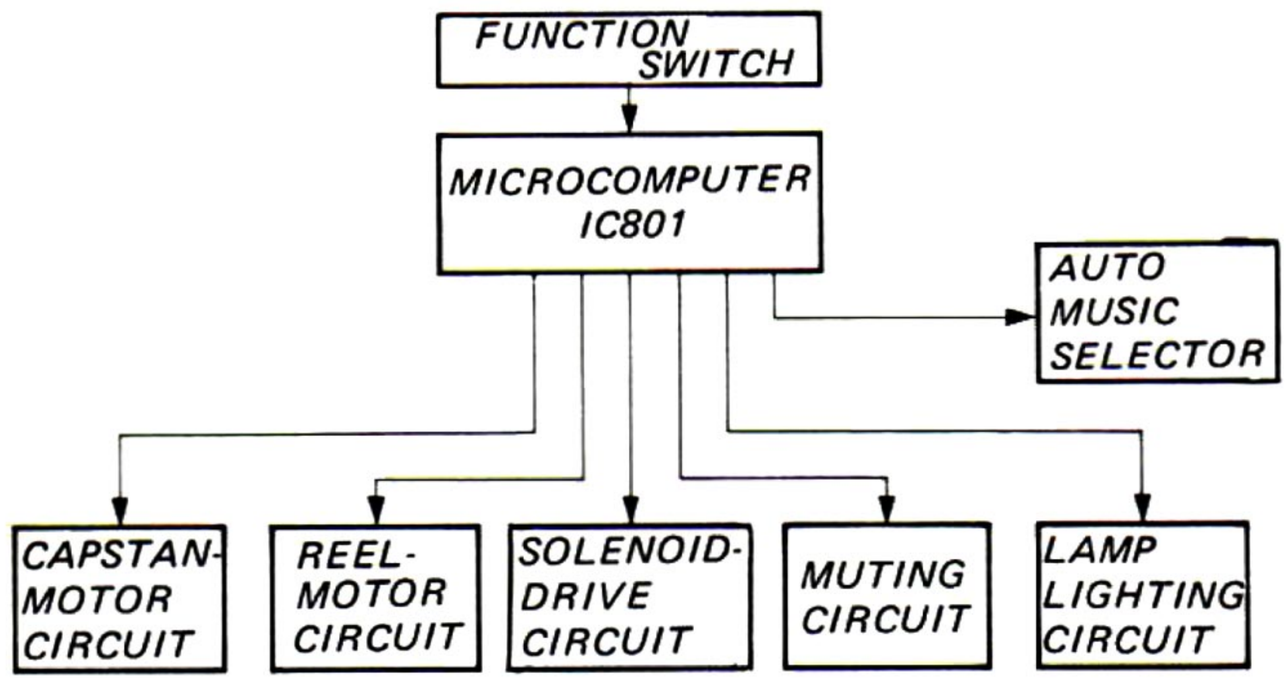


*Fig. 9*

### 1-4-1. Terminals of single-chip microcomputer and their functions

| No. | Description |
|---|---|
| 1 | clock generating terminal |
| 2 | shut-off input terminal |
| 3 | timing-clock input terminal |
| 4 | N/A |
| 5 | N/A |
| 6 | N/A |
| 7 | reset input terminal |
| 8 | record input terminal |
| 9 | pause input terminal |
| 10 | record muting input terminal |
| 11 | N/A |
| 12 | output terminal for rewind lamp |
| 13 | output terminal for fast-forward lamp |
| 14 | output terminal for forward lamp |
| 15 | output terminal for record lamp |
| 16 | forward reel motor drive output terminal |
| 17 | DIN output terminal |
| 18 | bias-oscillator output terminal |
| 19 | output terminal for pause lamp |
| 20 | N/A |
| 21 | B+ terminal |
| 22 | output terminal for record relay |
| 23 | output terminal for record-muting control |
| 24 | output terminal for music sensor |
| 25 | muting-control output terminal |
| 26 | brake-solenoid (PM1) drive output terminal |
| 27 | head-solenoid (PM2) drive output terminal |
| 28 | output terminal for solenoid kick |
| 29 | input terminal for record muting |
| 30 | fast-forward reel-motor drive output terminal |
| 31 | rewind reel-motor drive output terminal |
| 32 | N/A |
| 33 | rewind input terminal |
| 34 | stop input terminal |
| 35 | forward input terminal |
| 36 | fast-forward input terminal |
| 37 | MEMORY-counter input terminal |
| 38 | TIMER playback input terminal |
| 39 | TIMER record input terminal |
| 40 | accidental-erasure prevention input terminal |
| 41 | ground terminal |
| 42 | clock generating terminal |



www.hifiengine.com

### 1-4-2. When POWER switch is ON

1) Resetting IC801:

(1) C807 will start to be charged with the voltage through R817 from the power supply circuit.

(2) The inverter IC805 (1/3), R822 and R823 form together a Schmitt trigger circuit.

(3) Immediately after the POWER switch is turned on, a voltage of about 10 volts is applied from the Schmitt circuit to IC801 at terminal 7 (reset terminal) thereof, the latter being thus reset.

(4) When the potential charged in C807 exceeds the Schmitt level in about four seconds, the potential at terminal 7 will drop from 10 volts down to 0 volt, so that IC801 is released from the reset state. Then, it will be put into operation.

(5) Consequently, for a period of about four seconds after the POWER switch is turned on, no operation will occur even with any of the control switch buttons of the tape recorder depressed. It should be noted that D811 is a rapid-charging diode which is reverse-biased during the period from just turning-on of the POWER switch until immediately before turning-off thereof.

(6) When the POWER switch is OFF:
Voltage on the cathode side of D811 drops abruptly to zero volt. Accordingly, D811 will be forward-biased.
Potential in C807 is rapidly discharged by way of D811.
Thus, a voltage of about 10 volts is applied to terminal 7 of IC801 through the Schmitt circuit.
IC801 is now reset. By turning off the POWER switch, the tape recorder is released from all the modes of operation.

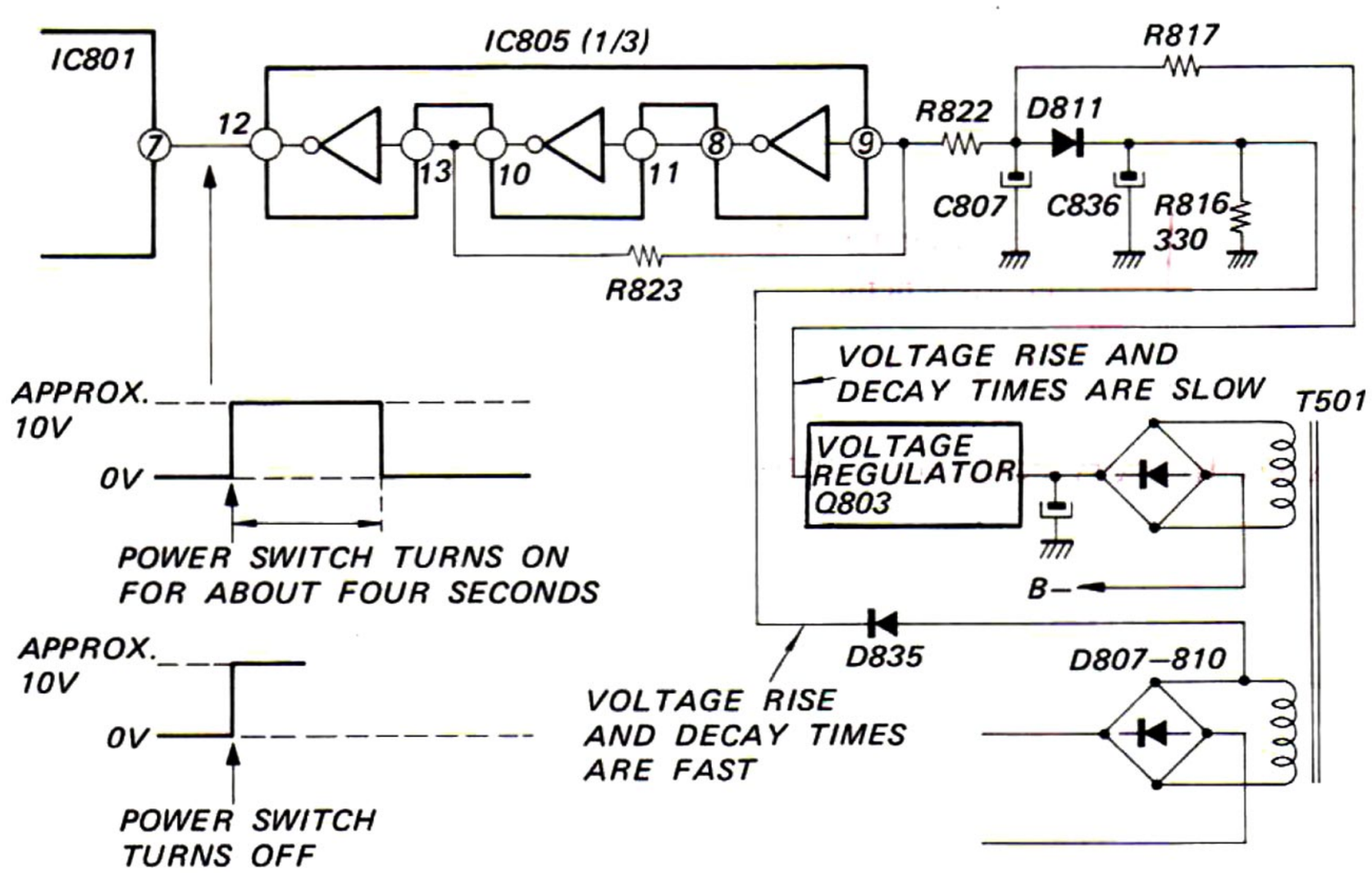


*Fig. 10*

2) Generating clock signal:

L801, C827 and IC801 work together to produce a clock signal of about 400kHz, which will prevail at the terminals 1 and 42 of IC801. If this signal is not available, the system-control circuit will not operate.

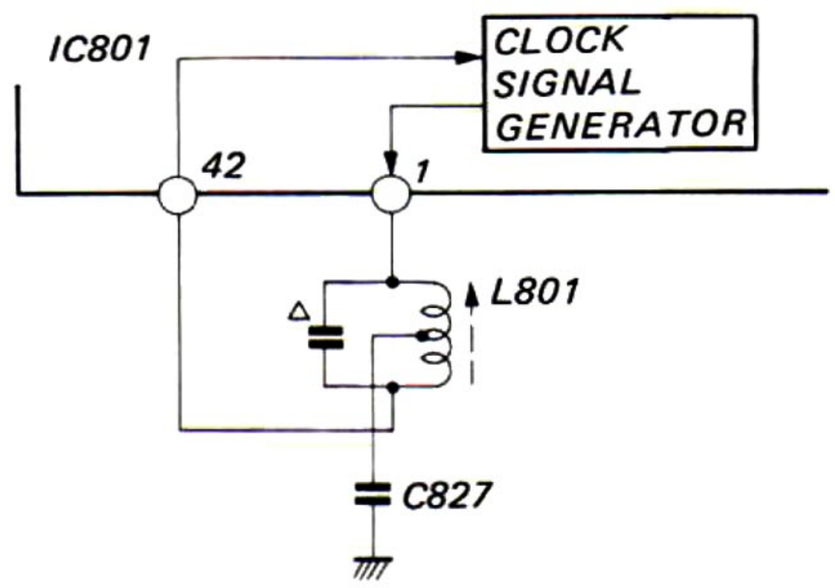


*Fig. 11*



www.hifiengine.com

3) Operation of TIMER switch:
In case the TIMER switch is placed at PLAY or REC, playback or record-mode operation will be started even with any corresponding button not depressed and immediately after IC801 is released from the reset state in four seconds from the turning-on of the POWER switch. After IC801 is released from the reset state, any change will not occur even by setting the TIMER switch to any position.

4) Suppressing noise immediately after the POWER switch is turned on (IC101 set to record mode):
(1) Before IC801 is released from the reset state (for four seconds immediately after the POWER switch is turned on), a voltage is applied through R821 and D812 from terminal 12 to terminal 1 of IC905.
(2) Then, terminal 2 of IC805 goes to "LOW" level.
(3) Q808 now turns on, delivering a voltage of about 8 volts at its collector.
(4) The voltage is then applied to terminal 12 of IC101 which in turn will be set for record mode.
(5) If IC101 is not set for playback mode in the timer operation, however, click noise occurs at times of mode changeover. To avoid this, the junction of R821 and D812 is grounded to turn the muting drive Q808 off so that the potential at terminal 12 of IC101 is rendered 0 volt, thereby setting IC101 in playback mode.

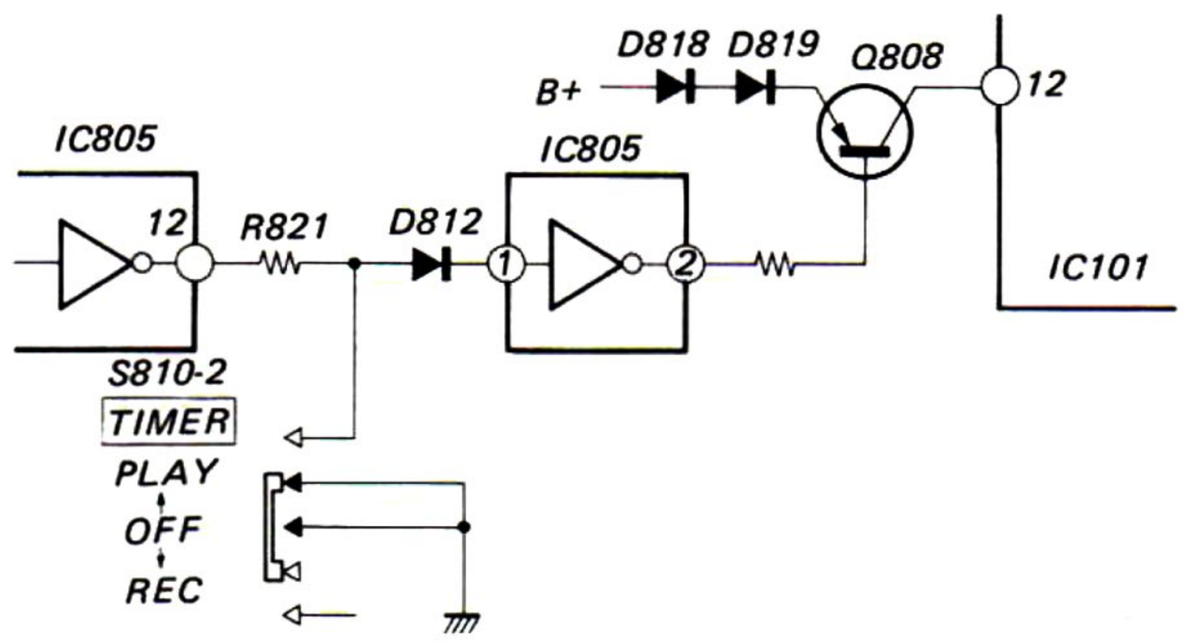


Fig. 12

5) Generating reference signal:
Q827 generates a reference signal of about 130Hz for each of the timing operations.
Such reference signal is generated as follows:
(1) C820 is charged through R941 and R942.
(2) When the charged potential exceeds a voltage determined by R938 and R939, it will rapidly be discharged.
(3) Then, C820 is re-charged.
(4) Repetition of such charging and discharging will result in a reference signal as shown in Fig. 13.
(5) If the frequency of the reference signal deviates considerably from the above value as 130Hz, no correct timing can be attained. In particular, when REC MUT button is pressed during the record mode, the pause lamp will flicker two times per second, which will be useful for checking the frequency deviation.
(6) Q825 is provided to temporarily stop the generation of reference signals in order to make a stopped state for about 0.3 second at time of direct function selection.

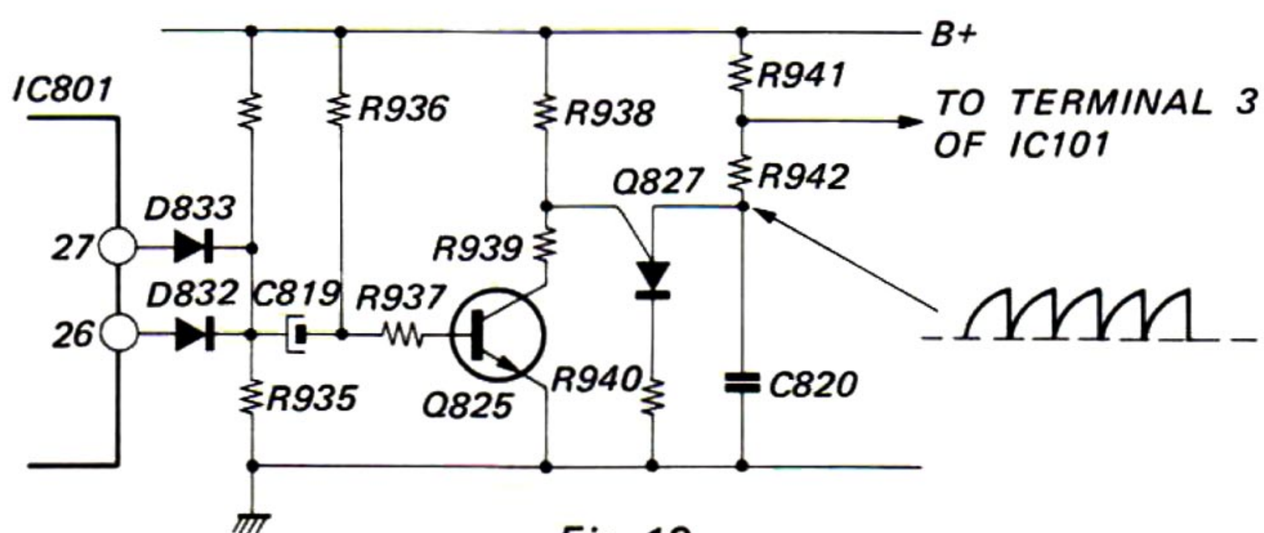


Fig. 13



www.hifiengine.com

### 1-4-3. Terminals of microcomputer IC801 and their functions

Refer to Fig. 15.

1) Input terminals for function switch:

The following terminals have priority one over another in the order from top to bottom.

(1) terminal 34:
input terminal for stop button
Input through this terminal has priority over all other inputs through the remaining terminals.

(2) terminal 36:
input terminal for rewind button

(3) terminal 33:
input terminal for fast-forward button

(4) terminal 35:
input terminal for forward button

(5) terminal 9:
input terminal for pause button

(6) terminal 8:
input terminal for record button

(7) terminal 10:
input terminal for REC MUTE button

2) Other input terminals:

(1) terminal 2:
Input terminal for shutting off. While the reel motor is turning, a square wave of +10 volts and 0 volt is applied to this input terminal. No shut-off will occur then.
When the reel motor stops turning, the potential of this terminal becomes in a stable 5V dc and the set shuts off. The set may not shuts off when a noise signal exists at this terminal.

(2) terminal 4:
The voltage is zero volt when the MEMORY/AMS switch (S812) is set to AMS. When the forward button and fast forward or rewind button are depressed at this time, AMS operation is started. Once this operation is started, it will last even if the MEMORY/AMS switch S812 is switched to MEMORY position.

(3) terminal 5:
The voltage is zero volt when the AMS display LED indicates "0". Otherwise, 10 volts will be delivered to this terminal.

(4) terminal 11:
The voltage is 10 volts when signals are fed to the playback amplifier; 0 volt when no signal is fed to the amplifier. Namely, this terminal is the input for detecting the interval in-between musics.
The interval detection amplifier is composed of a half of IC807. C811 is charged and discharged via Q818 and R870, and the resultant signal is then applied to terminal 2 of AMS IC IC802.
Now, an inverted and shaped output signal is obtained at terminal 3 of IC802. This output is inverted again by IC806 then applied to terminal 11 of IC801.

(5) terminal 37:
Input terminal for MEMORY counter, delivering a signal of differential waveform which becomes 0 volt for about 0.1 sec.

(6) terminal 40:
Input terminal for accidental-erasure prevention. When the level at this terminal is 0 volt (when a tape cassette with its claws torn away is loaded, S809 turns on to result in the zero volt), no record mode is established.

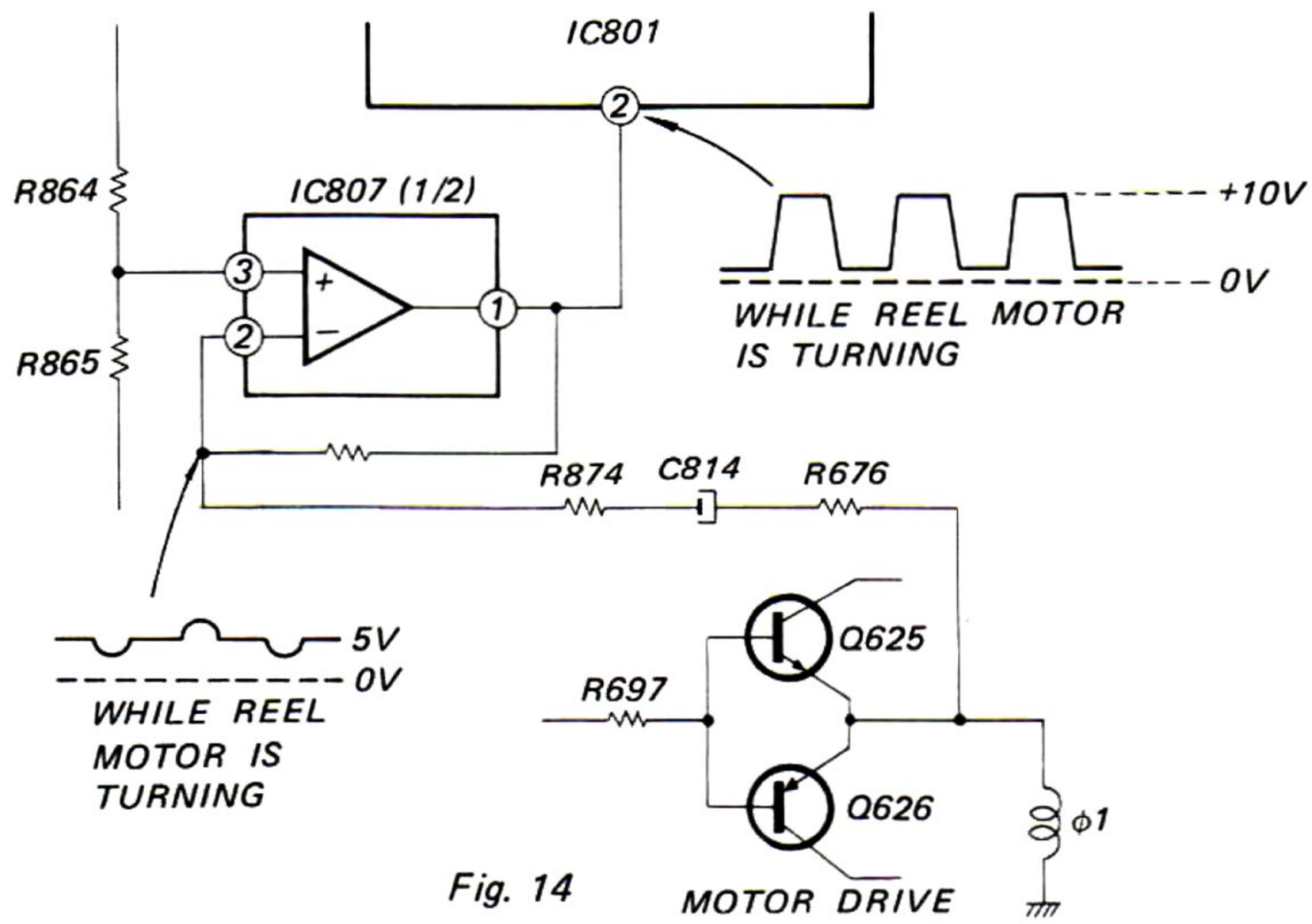


Fig. 14



www.hifiengine.com

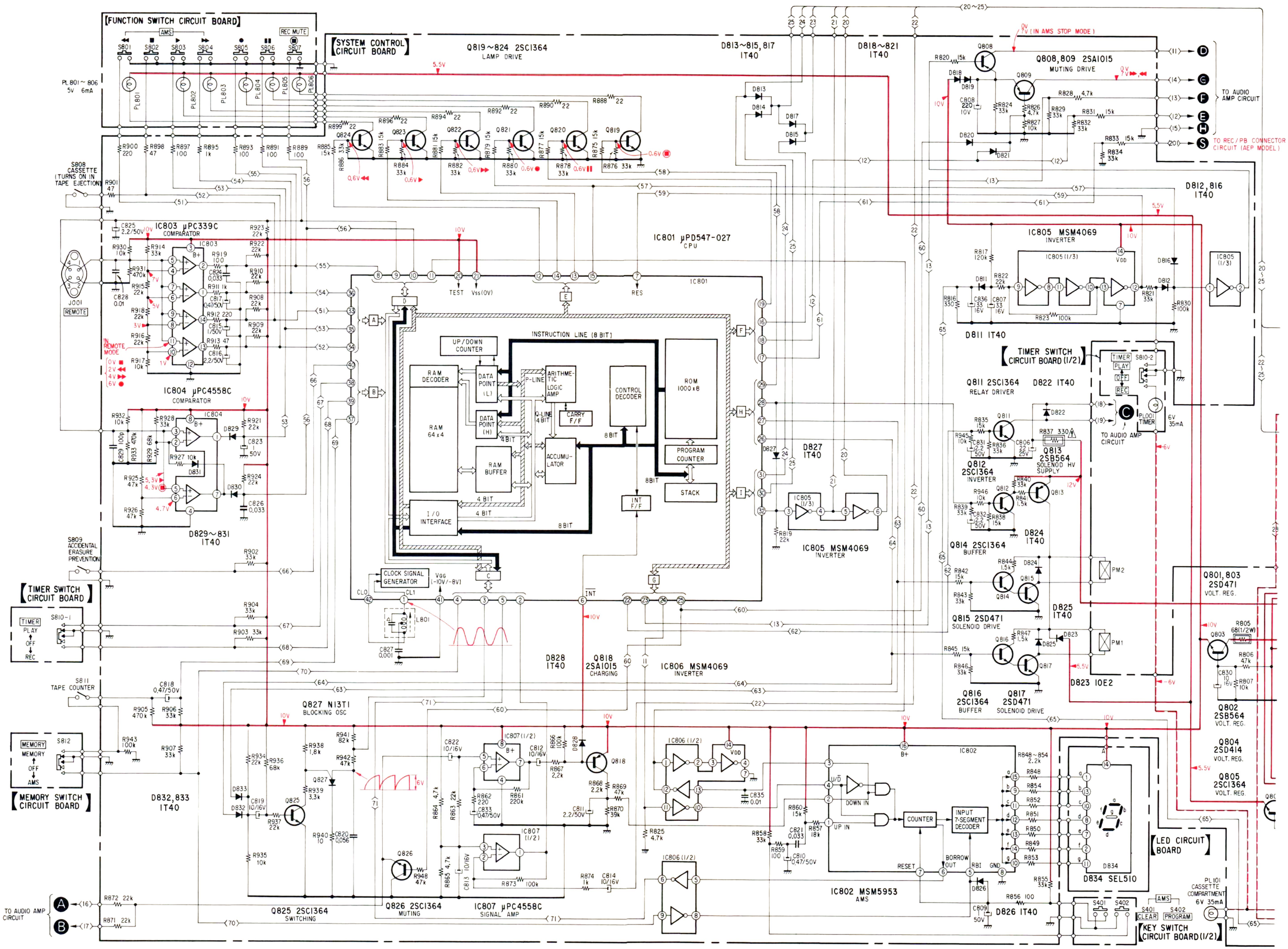
FUNCTION SWITCH CIRCUIT BOARD
SYSTEM CONTROL CIRCUIT BOARD
Q819~824 2SC1364
LAMP DRIVE
D813~815, 817
1T40
D818~821
1T40
Q808, 809 2SA1015
MUTING DRIVE
TO AUDIO AMP CIRCUIT
TO REC/PB CONNECTOR CIRCUIT (AEP MODEL)
IC803 μPC339C
COMPARATOR
IC804 μPC4558C
COMPARATOR
IC801 μPD547-027
CPU
INSTRUCTION LINE (8 BIT)
UP/DOWN COUNTER
RAM DECODER
RAM 64 x 4
DATA POINTER (L)
DATA POINTER (H)
P-LINE
ARITHMETIC LOGIC AMP
Q-LINE 4 BIT
CARRY F/F
CONTROL DECODER
ROM 1000 x 8
PROGRAM COUNTER
STACK
RAM BUFFER
ACCUMULATOR
I/O INTERFACE
INT F/F
CLOCK SIGNAL GENERATOR
IC805 MSM4069
INVERTER
D812, 816
1T40
D811 1T40
TIMER SWITCH CIRCUIT BOARD (1/2)
Q811 2SC1364
RELAY DRIVER
D822 1T40
Q812 2SC1364
INVERTER
Q813 2SB564
SOLENOID HV SUPPLY
Q814 2SC1364
BUFFER
D824 1T40
Q815 2SD471
SOLENOID DRIVE
D825 1T40
Q816 2SC1364
BUFFER
Q817 2SD471
SOLENOID DRIVE
D823 10E2
Q801, 803 2SD471
VOLT. REG.
Q802 2SB564
VOLT. REG.
Q804 2SD414
VOLT. REG.
Q805 2SC1364
VOLT. REG.
D829~831
1T40
TIMER SWITCH CIRCUIT BOARD
MEMORY SWITCH CIRCUIT BOARD
Q827 N13T1
BLOCKING OSC
D828 1T40
Q818 2SA1015
CHARGING
IC806 MSM4069
INVERTER
D832, 833
1T40
Q825 2SC1364
SWITCHING
Q826 2SC1364
MUTING
IC807 μPC4558C
SIGNAL AMP
IC802 MSM5953
AMS
COUNTER
INPUT 7-SEGMENT DECODER
D834 SEL510
LED CIRCUIT BOARD
D826 1T40
KEY SWITCH CIRCUIT BOARD (1/2)
TO AUDIO AMP CIRCUIT

Fig. 15

3) Output terminals:

Being open-drain type, the terminals must be grounded by way of resistors.

(1) terminal 12:
output terminal for rewind lamp

(2) terminal 13:
output terminal for fast-forward lamp

(3) terminal 14:
output terminal for forward lamp

(4) terminal 15:
output terminal for record lamp

(5) terminal 29:
output terminal for REC MUTE lamp
The voltage of each of the above terminals becomes in 10 volts immediately after an input is fed to IC801 by operating a control button, in order to turn on the respective indication lamp.

(6) terminal 19:
Output terminal for pause lamp. The pause lamp flickers when the REC MUTE button is pressed. The flickering rate is 0.5 sec in the initial four seconds (the lamp flickers two times per second). By depresseing the REC MUTE button continuously for more than four seconds, the flickering rate becomes in 0.25 sec ( a half of the above.).

(7) terminal 26:
Output terminal for brake solenoid (PM1). This terminal goes to "HIGH" level in fast-forward and rewind modes; Q816 and Q817 turn on, PM1 energizes to release the brake. Furthermore, the pinch roller will be separated from the capstan when the pause mode is effected.

(8) terminal 27:
Output terminal for head solenoid (PM2) Goes to "HIGH" level when forward, record or AMS mode is set; Q814 and Q815 turn on and PM2 energizes so as to raise the head block.

(9) terminal 28:
Output terminal for solenoid kick. This terminal will go to "HIGH" level simultaneoutly with the appearance of the outputs for each solenoid, and in 0.1 second, goes down to "LOW" level. Consequently, simultaneously with the appearance of the output for each solenoid, Q812 and Q813 turn on so that each solenoid will be energized with a high voltage. 0.1 second later, Q812 turns off.
In 0.1 second after the attraction, the solenoid will be energized with a low voltage in order to prevent being heated up.

(10) terminal 30:
Output terminal to drive the reel motor in fast-forward mode. By pressing the fast-forward button, a "HIGH" level output prevails on this terminal to drive the reel motor in fast forward.

(11) terminal 31:
Output terminal to drive the reel motor in rewind mode. When the rewind button is pressed, this terminal will deliver a "HIGH" level signal to drive the reel motor in rewind mode.

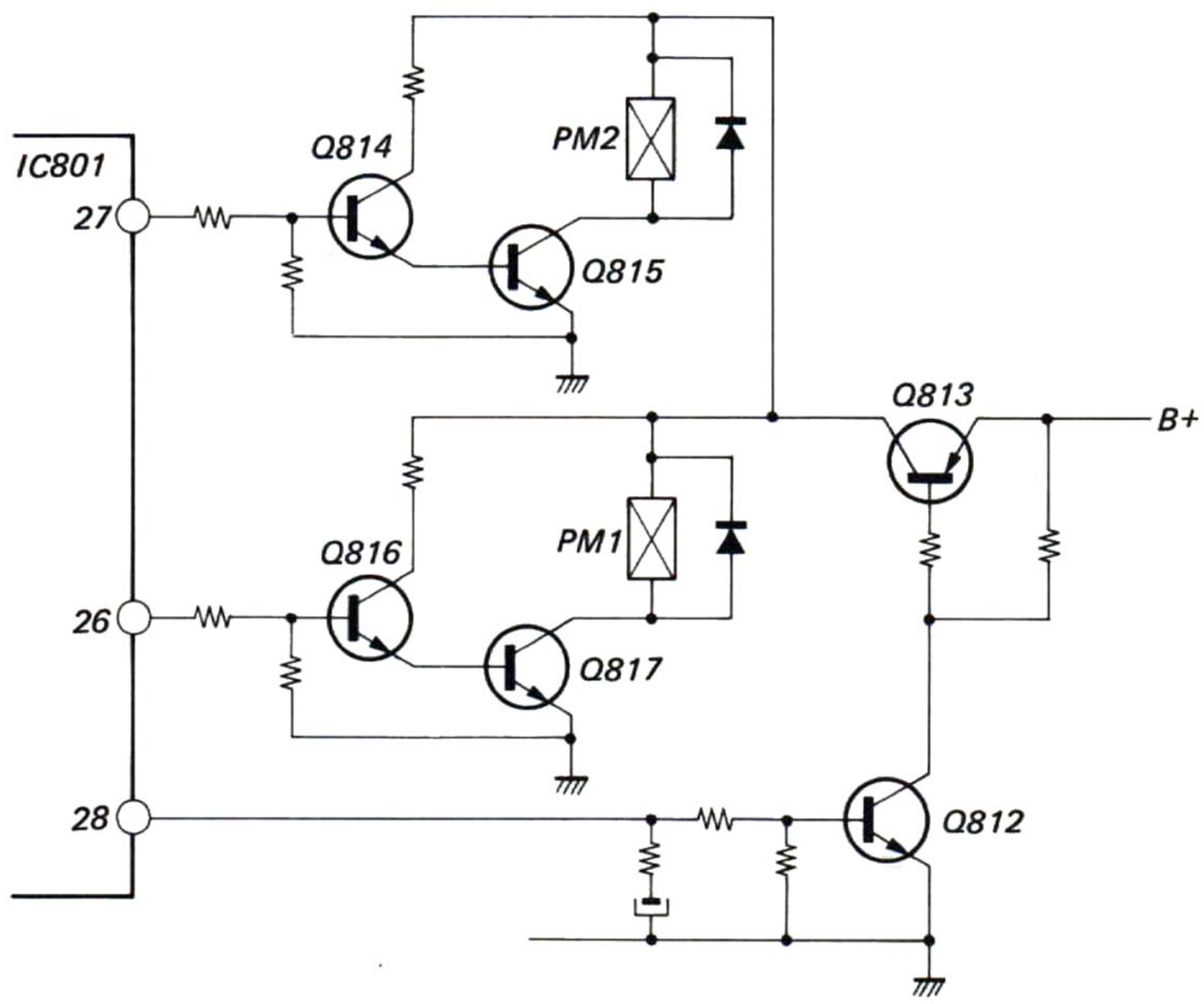


*Fig. 16*



www.hifiengine.com

(12) terminal 16:
Output terminal to drive the reel motor in forward mode. By pressing the forward button, there will prevail a "HIGH" level signal at this terminal to drive the reel motor in forward mode.

### 1-4-4. On the Reel-Motor Control Circuit

The operational amplifier IC604 delivers at its output a zero, or positive or a negative voltage with respect to the ground depending upon the input signal received. The BSL motor is featured in that it can be turned in forward or reverse direction by supplying positive or negative input signal. Therefore, by using the operational amplifier as a driver of the motor, the reel motor (BSL) can be turned in forward or reverse in accordance with the output voltage from the operational amplfier.



www.hifiengine.com

### 1. Depressing fast-forward button (See Fig. 17)

1) Terminal 30 of IC801 goes to "HIGH" (about 10 volts) level.
2) Signal ① turns Q618 on and Q619 off.
3) Signal ② turns Q621 and Q622 on.
4) Thus, Q624 and Q623 turn on so that the gain of the reel-motor drive amplifiers (IC605, Q625 and Q626) and (IC605, Q627 and Q628) rises to increase the torque of the reel motor in the fast-forward mode.
5) Because the potential at the base of Q615 is 0 volt, this transistor will turn off, with the result that Q616 turns off, then Q617 turns off.
6) The potential on the collector of Q617 goes positive, and this positive voltage is applied to terminal 3 (positive terminal) of IC604. Thus, the output of the operational amplifier IC604 becomes positive, so that the reel motor will rotate forward.
7) The reel motor's torque is increased and turned forward. Thus, the fast-forward operation is established.

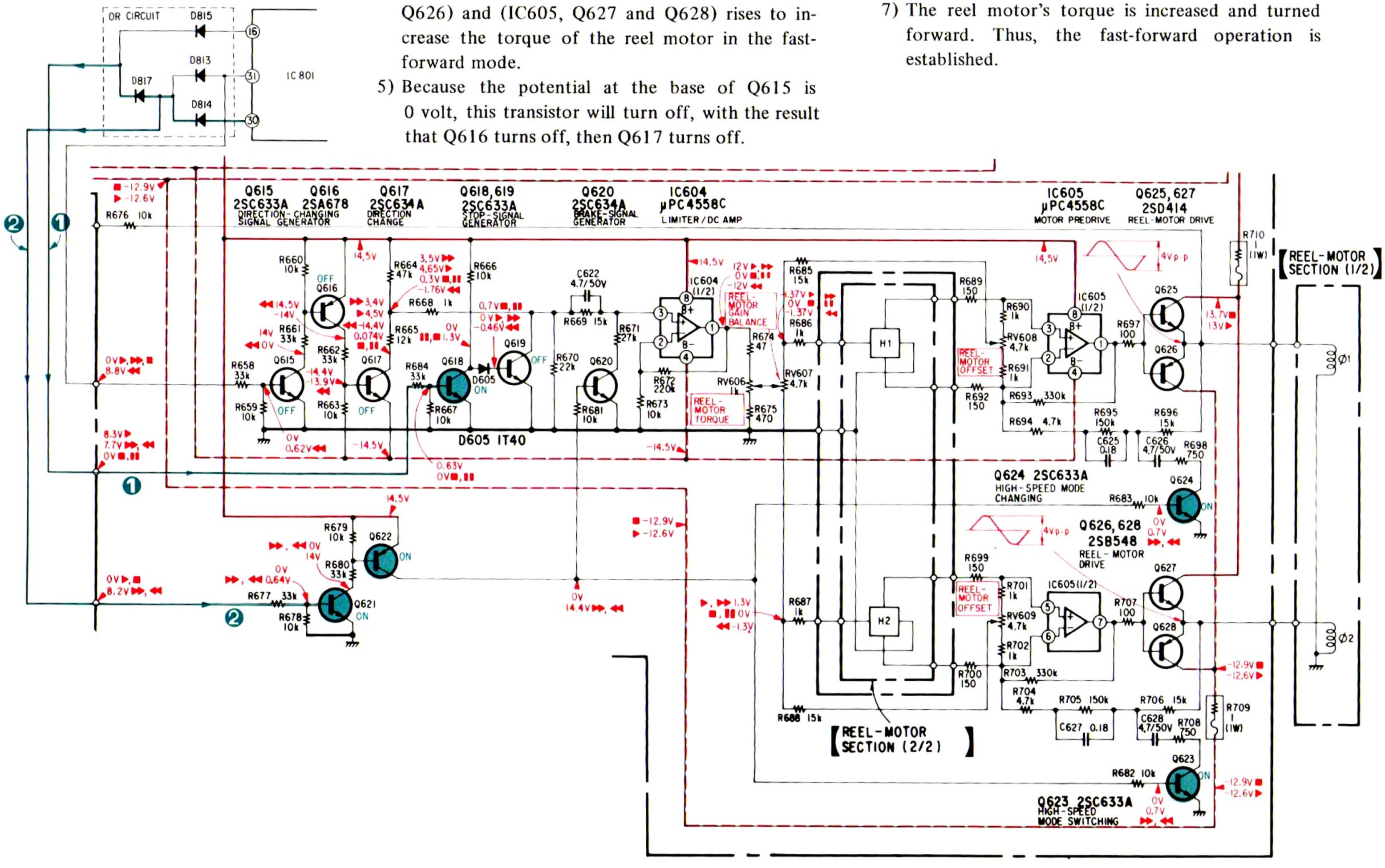


Fig. 17

## 2. Depressing rewind button (See Fig. 18)

1) Terminal 31 of IC801 goes to "HIGH" level.
2) Signal ① turns Q618 and Q619 off.
3) Signal ② turns Q621 on and Q622 off.
4) Thus, Q624 and Q623 turn on, and the gain of the motor-drive amplifiers (IC605, Q625 and Q626) and (IC605, Q627 and Q628) rises to increase the torque of the reel motor in rewind mode.
5) Signal ③ turns Q615 on, which in turn will turn Q616 and Q617 on.
6) The potential on the collector of Q617 goes negative, and a negative voltage is applied to terminal 3 (positive terminal) of IC604. Thus, the output of the operational amplifier IC604 becomes negative, so that the reel motor will be turned reversely.
7) The reel-motor torque is increased and the motor turns reversely. Thus, the rewind operation is established.

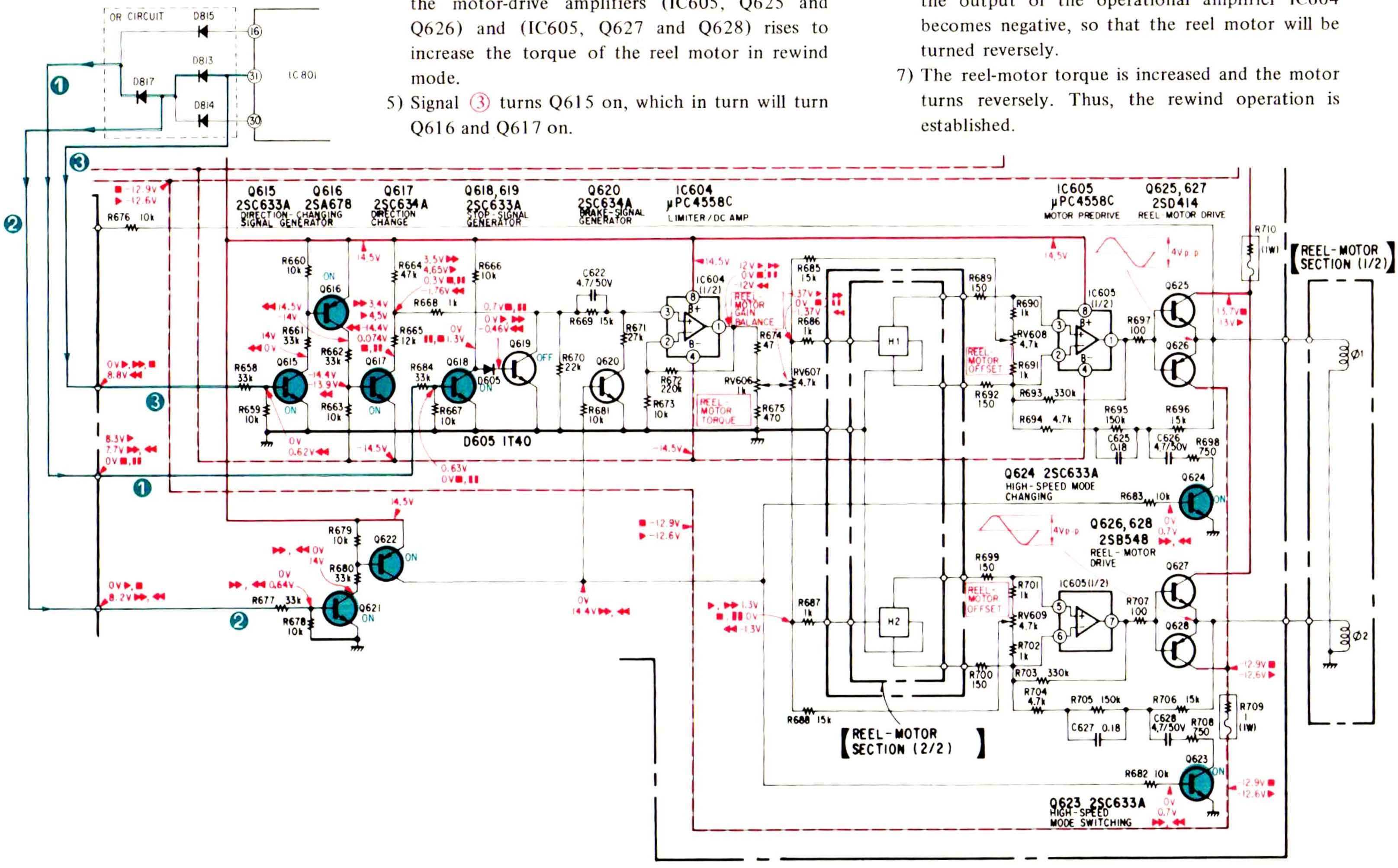


*Fig. 18*

### 3. Depressing forward button (See Fig. 19)

1) Terminal 16 of IC801 goes to "HIGH" level.
2) Signal ① turns Q621 and Q622 off.
3) Because the potential at the base of Q621 is 0 volt, Q621 turns off, then Q622 turns off.
4) Thus, Q624 and Q623 turn off, so the torque of the reel motor will not be increased.
5) Since the potential at the base of Q615 is 0 volt, this transistor turns off, which in turn will cause Q616 and Q617 to be turned off.
6) Thus, the potential at the collector of Q617 becomes positive, and a positive voltage is applied to terminal 3 (positive terminal) of IC604. Output from the operational amplifier IC604 becomes positive, thus the reel motor will turn forward.
7) In this way, the set becomes in the playback mode.

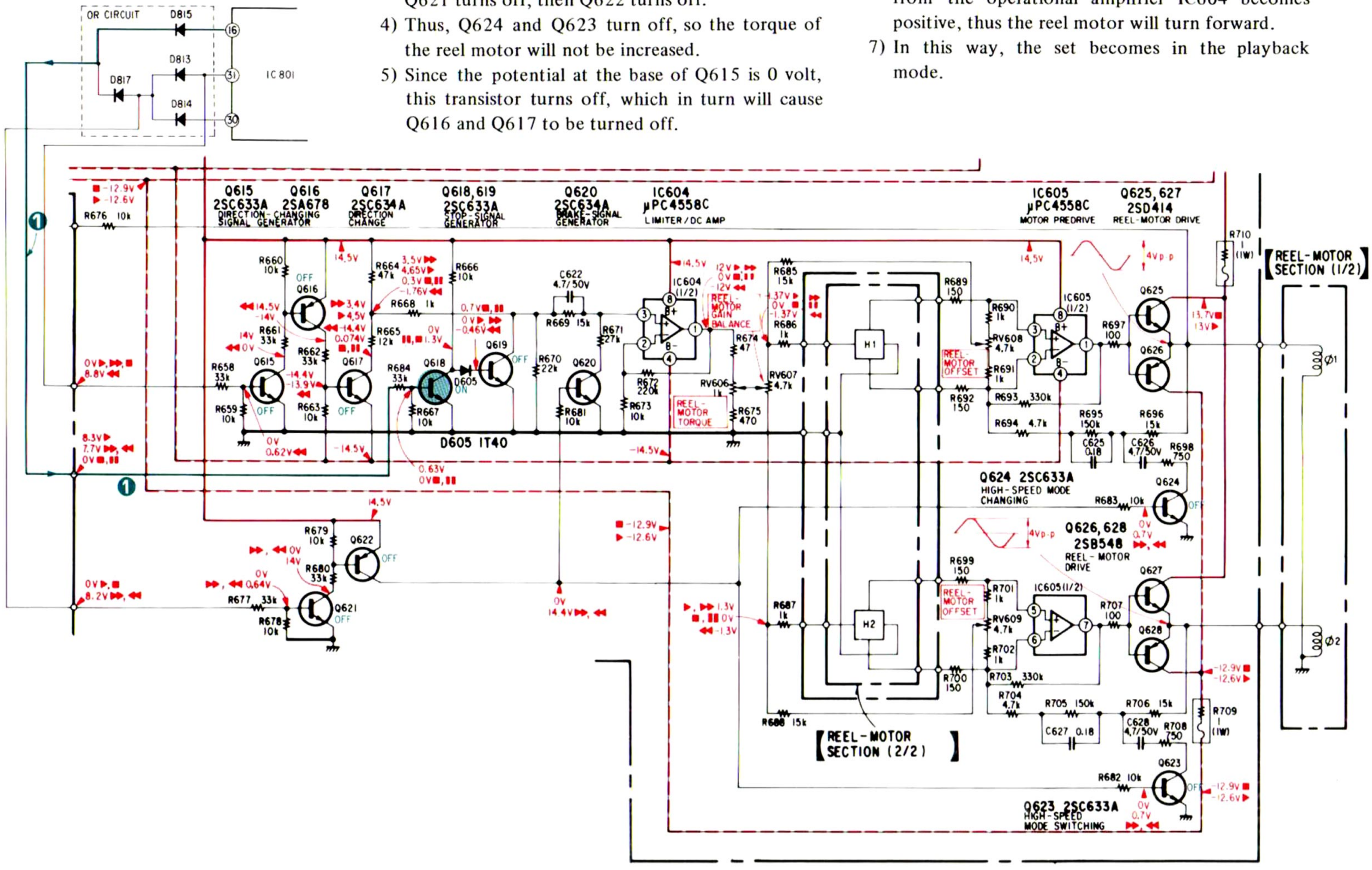


*Fig. 19*

### 4. Depressing stop button (See Fig. 20)

1) All the terminals 16, 31 and 30 of IC801 go to "LOW (0 volt)" level.
2) Because the potential at the base of Q618 is 0 volt, this transistor will be turned off while Q619 is turned on.
3) As the result, the potential at terminal 3 (positive terminal) of IC604 becomes 0 volt, and the output from it will also be 0 volt. Thus, the reel motor stops turning.

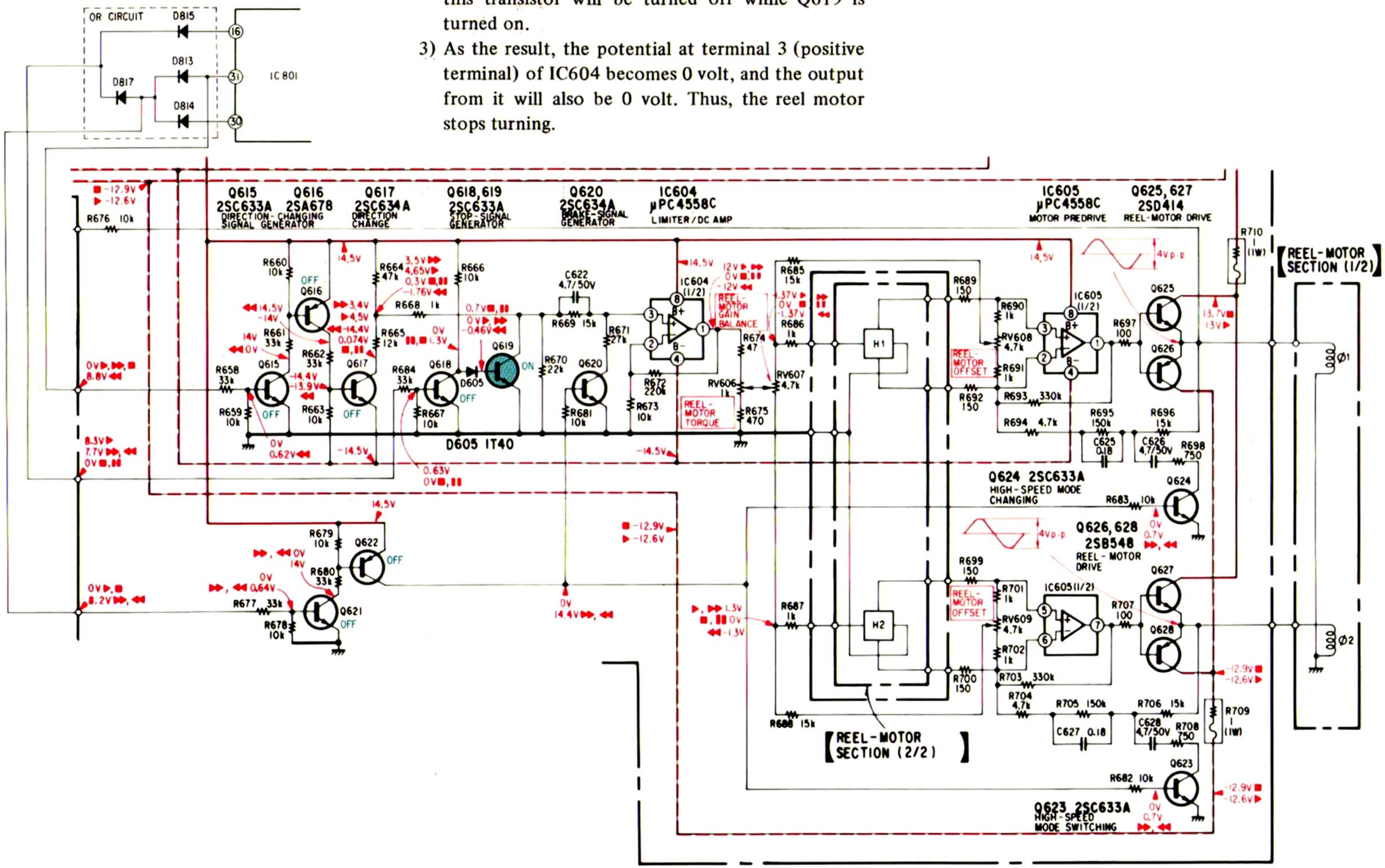


*Fig. 20*

## 5. Electromagnetic brake for reel motor during fast-forward and rewind modes (See Fig. 21)

1) Q620 turns on in fast-forward and rewind modes.
2) While the reel motor is turning, namely while Q619 is off, C622 is charged via R668 with a positive or negative voltage depending upon the turning direction of the reel motor.
3) The charged potential will be discharged through Q619 when the reel motor is stopped (at this time, Q619 turns on).
4) Therefore, the positive terminal of the operational amplifier IC604 is applied with a voltage of a sign opposite to that during the turning of the reel motor, so that the output from the operational amplifier IC604 will be a voltage of a sign opposite to that during the turning of the reel motor.
5) The reel motor will turn reverse, which serves as a brake to rapidly stop the turning of the reel motor during fast-forward and rewind modes.
6) This brake will be released when C622 is completely discharged.

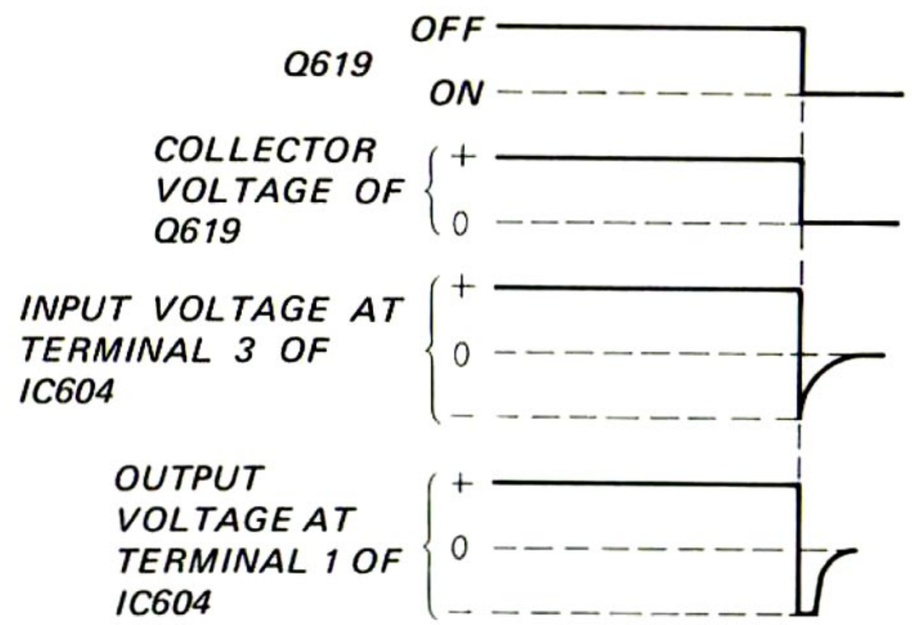


Fig. 22

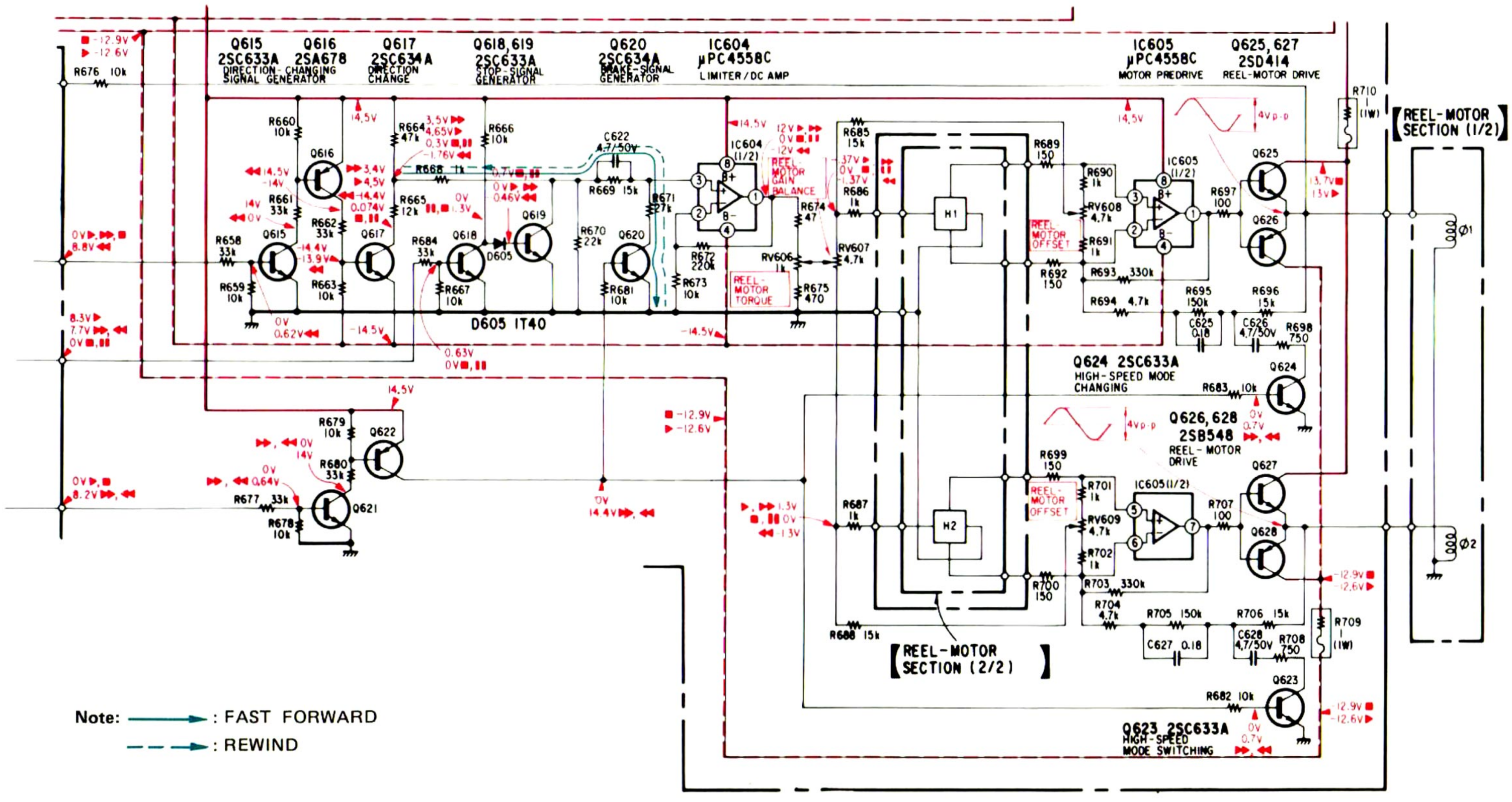


Fig. 21

(13) terminal 22:
Output terminal for record relay. Depress the forward button while pressing the record button, and the potential at this terminal will go to "HIGH (about 10 volts)" level, thus Q811 turns on.
Accordingly, RY301 turns on so that the head terminal is switched from playback to record mode.

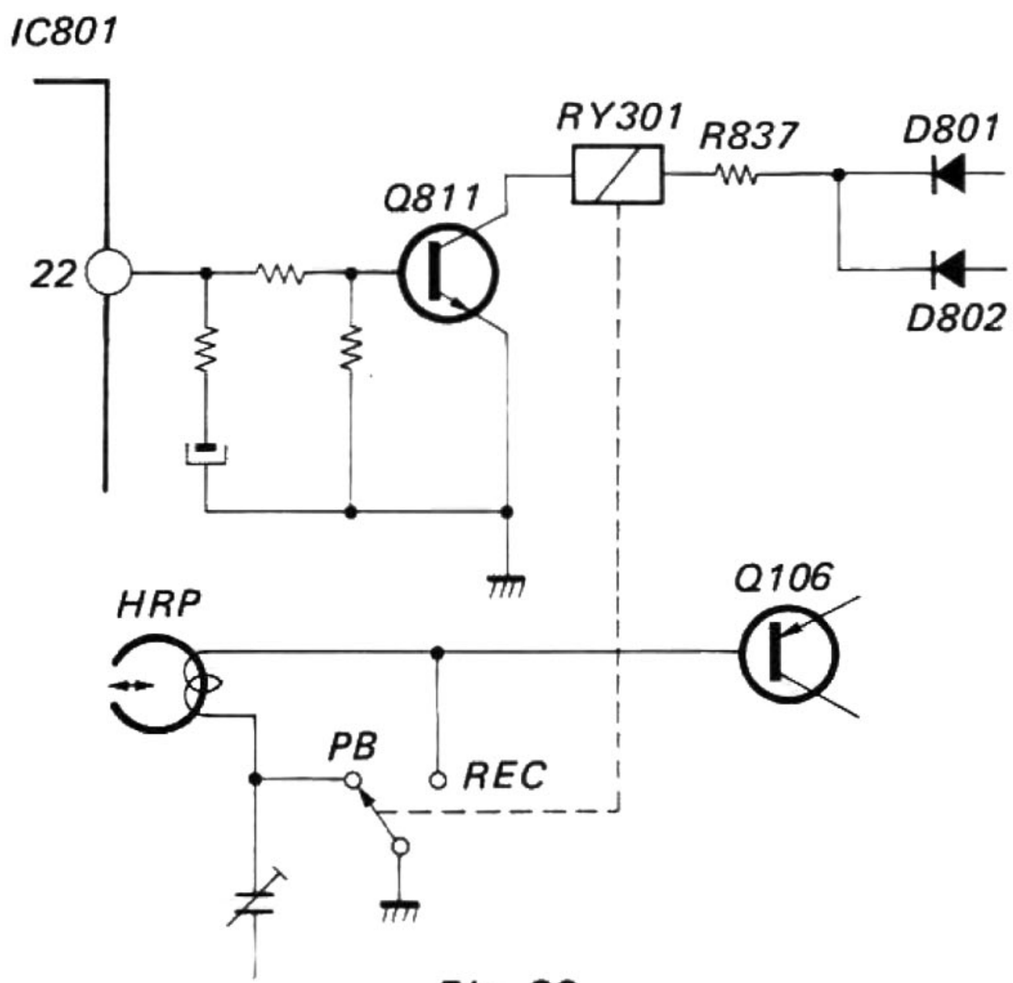


Fig. 23

(14) terminal 23:
Output terminal for record muting control.
By establishing record mode (depress the forward button while pressing the record button), the potential at this terminal will be "HIGH (about 10 volts)" level. Then, Q111, which has been on, is turned off, so that the record muting is released. By operating other than the record button, the potential at this terminal goes to "LOW" level. B- voltage is applied to the base of Q111 through R326, thus Q111 is turned on. In this way, the output amp in IC101 is muted.

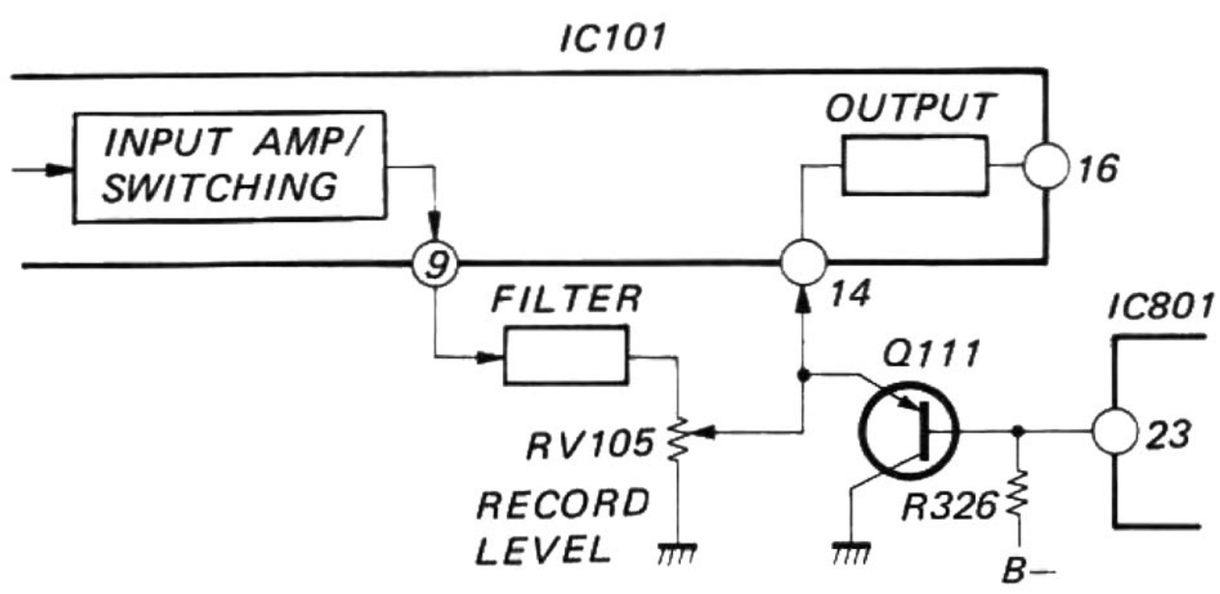


Fig. 24

(15) terminal 17:
DIN output terminal (for AEP Model only). The potential at this terminal goes to "HIGH (about 10 volts)" level during the playback mode and Q314 turns on, which in turn will cause the relay RY302 to turn on. Then, the playback output will prevail at the REC/PB connector J301.

(16) terminal 18:
bias-oscillator output terminal.
By establishing the record mode (press the forward button while pressing the record button), the potential at this terminal will go to "HIGH (about 10 volts)" level. Now Q313 through Q311 turn on, so that B+ is applied to the bias oscillator circuit which will be put into operation.

(17) terminal 25:
output terminal for muting control:
When the forward or record button is pressed, the potential at this terminal goes to "HIGH (about 10 volts)", while it will be "LOW (0 volt)" level when other buttons (stop, fast-forward and rewind) are pressed. Accordingly, in stop, fast-forward or rewind mode, Q809 has the emitter potential higher than the base potential, so that it turns on, thus a voltage of about 7 volts will prevail at its collector.
As the result, Q109 turns on and the output from the playback amplifier will be muted.
Q112 turns on and LINE OUT signal will be muted.
Q826 turns off because the potential of its base becomes in 0 volt so that the signal from AMS circuit will not be muted.
Then, during the playback or record mode, Q809 has the emitter potential lower than the base potential, thus this transistor will be turned off. The collector potential of Q809 will be 0 volt.
As the result, Q109 turns off and the muting of the playback amplifier will be released. Q112 turns off and the LINE OUT muting will also be released.
Further, Q826 turns on because its base potential is higher than that of the emitter, and the AMS circuit will be muted.



www.hifiengine.com

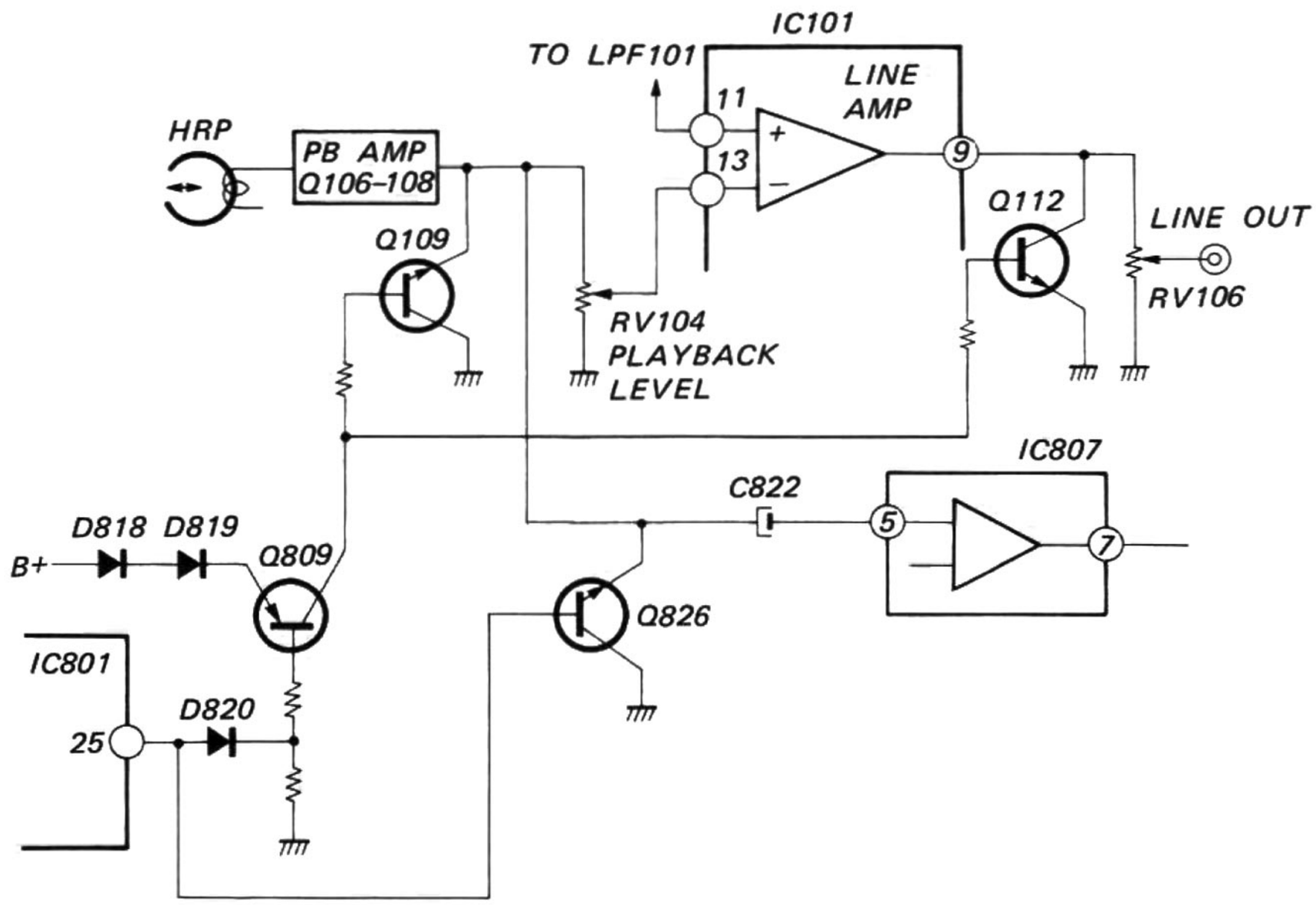


*Fig. 25*

### 1-4-5. Automatic Music Sensor Circuit

This is a circuit which, by sensing the interval from one music to another recorded on a magnetic tape, counts the number of such musics. It can cope with a maximum of nine musics, and permits to start the playback of the musics beginning with a preset one.

**1. Terminals of IC801 (LED driver/up-down counter) and their functions**

(1) terminal 16:
bias (B+) terminal (10 volts)

(2) terminal 8:
grounding terminal

(3) terminals 9 to 15:
numerical output terminals of LED display

(4) terminal 1 "UP IN":
Count-down input terminal. When the level at this terminal is "low" (0 volt), the counter counts up by one. The counter is built in IC801. At this time, the terminals 9 to 15 are grounded, respectively.

(5) terminal 2 "DOWN IN":
Count-down input terminal. When the level at this terminal is "high" (10 volts), count-down preparation is effected in IC801. Thereafter, when the level becomes "low" (0 volt), the counter counts down by one. However, no further count-down operation will be effected to less than "zero".

(6) terminal 3 "DOWN OUT":
Count-down output terminal. When the level at terminal 2 mentioned above is "low", namely, when no signal prevails there, this output terminal will continue delivering signals of 10 volts.

(7) terminal 4 "UP-DOWN":
Where the level at this terminal is "low", the terminals 2 "DOWN IN" and terminal 6 "BORROW OUT" are effective. However, when the level is "high", both terminals 2 and 6 are not operative.

(8) terminal 5 "PBI":
AMS input terminal. Receives an input signal for turning on LED when trying AMS (automatic music selection). When the level at this terminal is "high", LED will be turned on unconditionaly.

(9) terminal 6 "BORROW OUT":
When displaying "zero", this output terminal continues delivering signals of 10 volts.

(10) terminal 7 "RESET":
When the level at this terminal is "low", delivers signals to reset the LED for display of "0" (zero). (Whenever the POWER switch is turned OFF, the level at this reset terminal becomes "low". Therefore, subsequent turning on of the POWER switch will cause the LED to display "0" (zero).



www.hifiengine.com

**2. When MEMORY/AMS switch (S812) is placed at MEMORY (See Fig. 26)**

(1) The level at terminal 4 of IC801 becomes "high". This level is inverted through IC806. There will prevail "low" level at terminal 8 of this IC806.

(2) Since the level at terminal 5 of IC802 becomes "low", LED will not be turned on.

(3) Also, the level at terminal 7 of IC802 is "low", so the LED will be reset once to display "0" (zero).

(4) Press the rewind button to rewind the tape. When the tape-counter switch (S811) is turned on (the tape-counter reads "999", the negative side of C818 will be grounded and the potential at terminal 37 of IC801 will be of differential waveform of 0 volt for about 0.1 sec.

(5) The level at terminals 26 and 31 of IC801 will be "low", then the tape rewinding will be stopped.

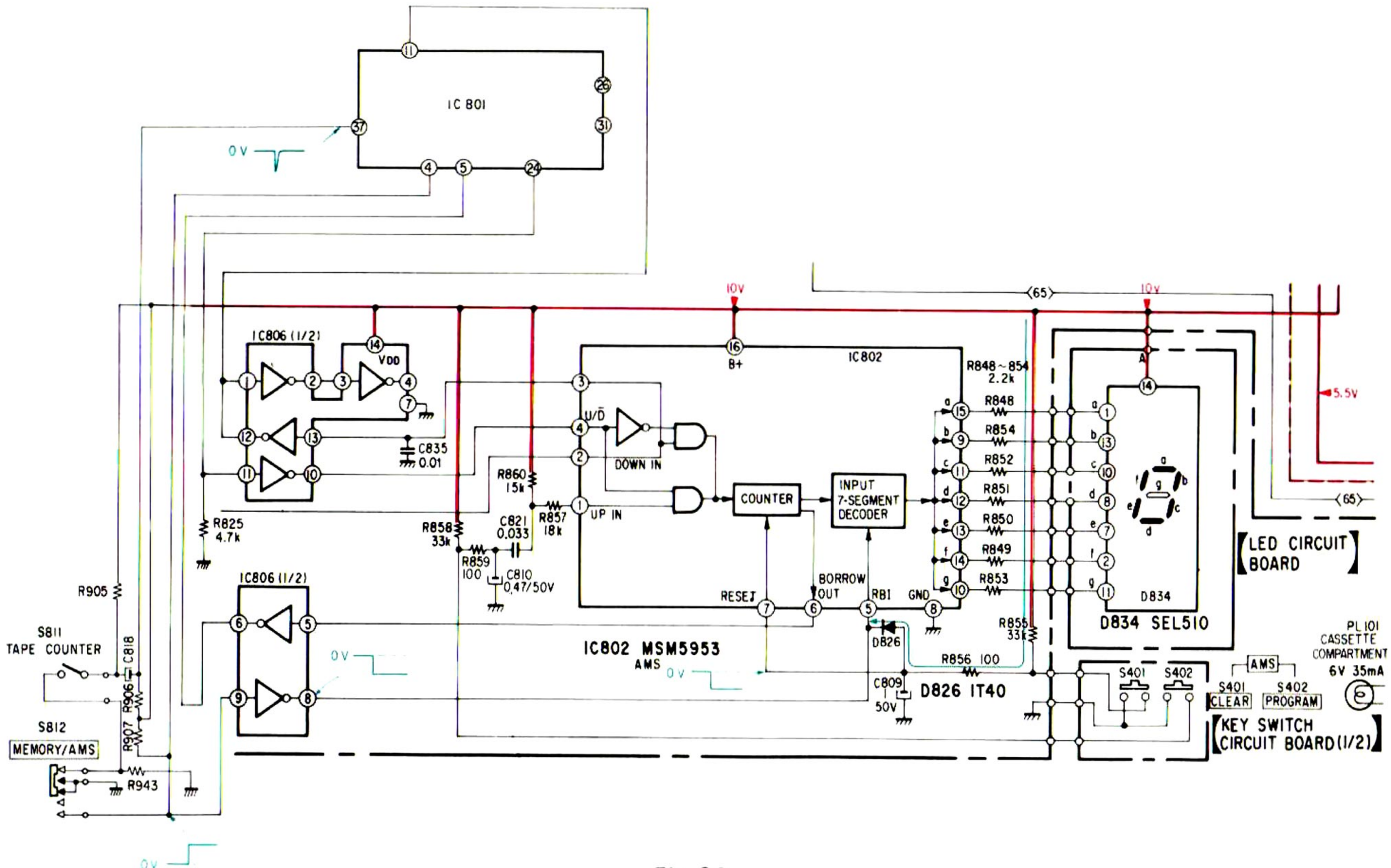


*Fig. 26*

### 3. When MEMORY/AMS switch (S812) is set to OFF position (See Fig. 27)

(1) Since the level at terminals 5 and 7 of IC802 is "low" as in Item 2 above, LED will not be turned on. Further, the LED will be reset to display "0" once.

(2) Even when the rewind button is depressed and the tape-counter switch (S811) is turned on, the negative side of C818 is not grounded so that the potential at terminal 37 of IC801 will not be of differential waveform. Consequently, the tape rewinding will not be stopped but will last.

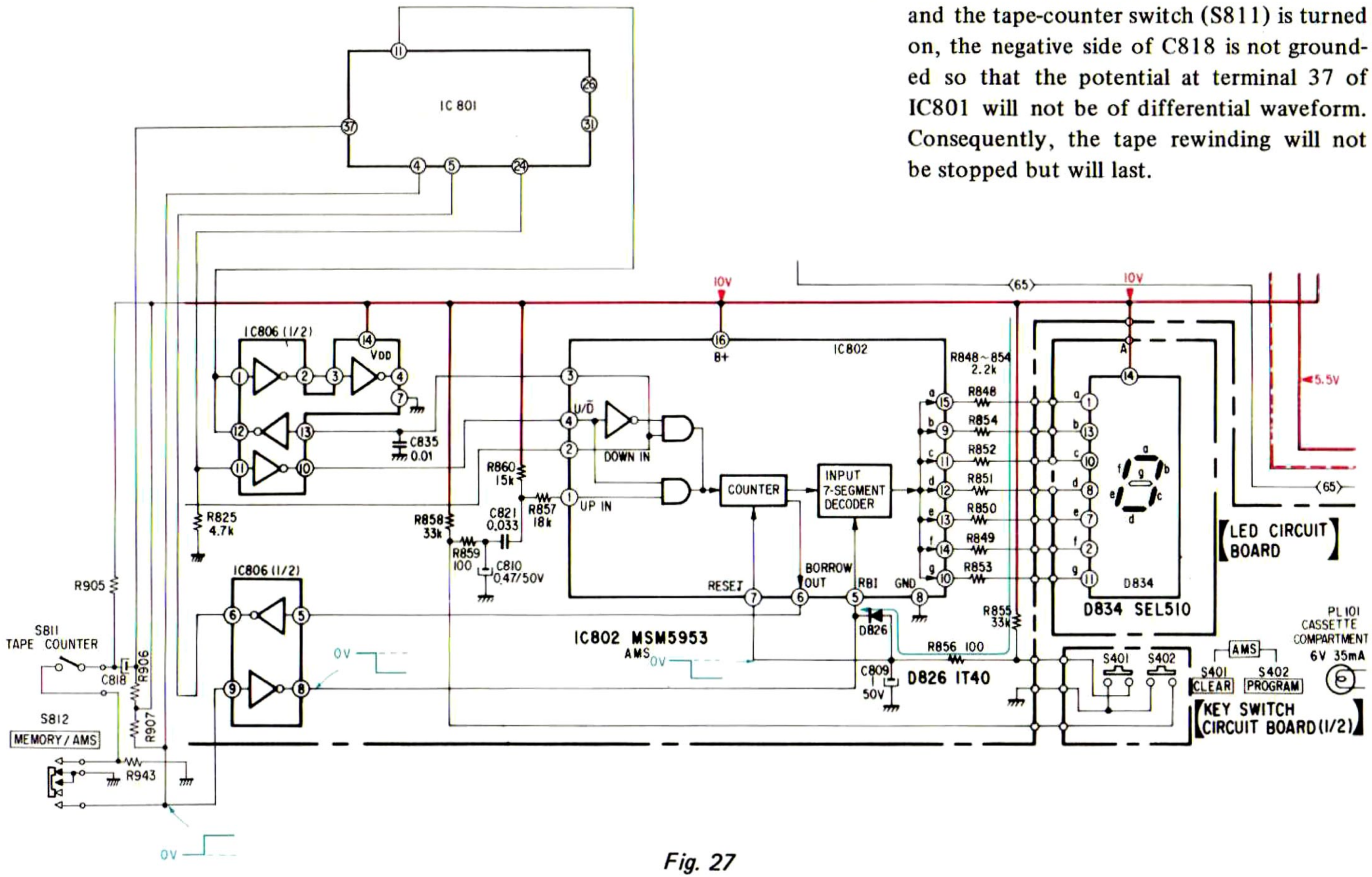


*Fig. 27*

**4. When MEMORY/AMS switch (S812) is set to AMS (See Fig. 28)**

(1) With this switch setting, terminal 4 of IC801 is grounded and so the level at this terminal becomes "low". This level will be inverted through IC806. The level at terminals 5 and 7 of IC802 will be "high" so that LED will turn on. Thus, the resetting to the display of "0" is cleared.

(2) The level at terminals 24 of IC801 gets "low", which will be inverted through IC806. Since the level at terminal 4 of IC802 becomes "high", terminals 2 "DOWN IN" and 6 "BORROW OUT" will not be operative.

**5. Count-up operation (See Fig. 28)**

With the PROGRAM switch (S402) depressed, the differential circuit of C810 and C812 will deliver negative pulses to terminal 1 of IC802, thus the counter acts to count up.

**6. Clearing operation (See Fig. 28)**

By pressing the CLEAR switch (S401), the level at terminal 7 of IC802 becomes "low", resetting the LED to display "0" (zero).

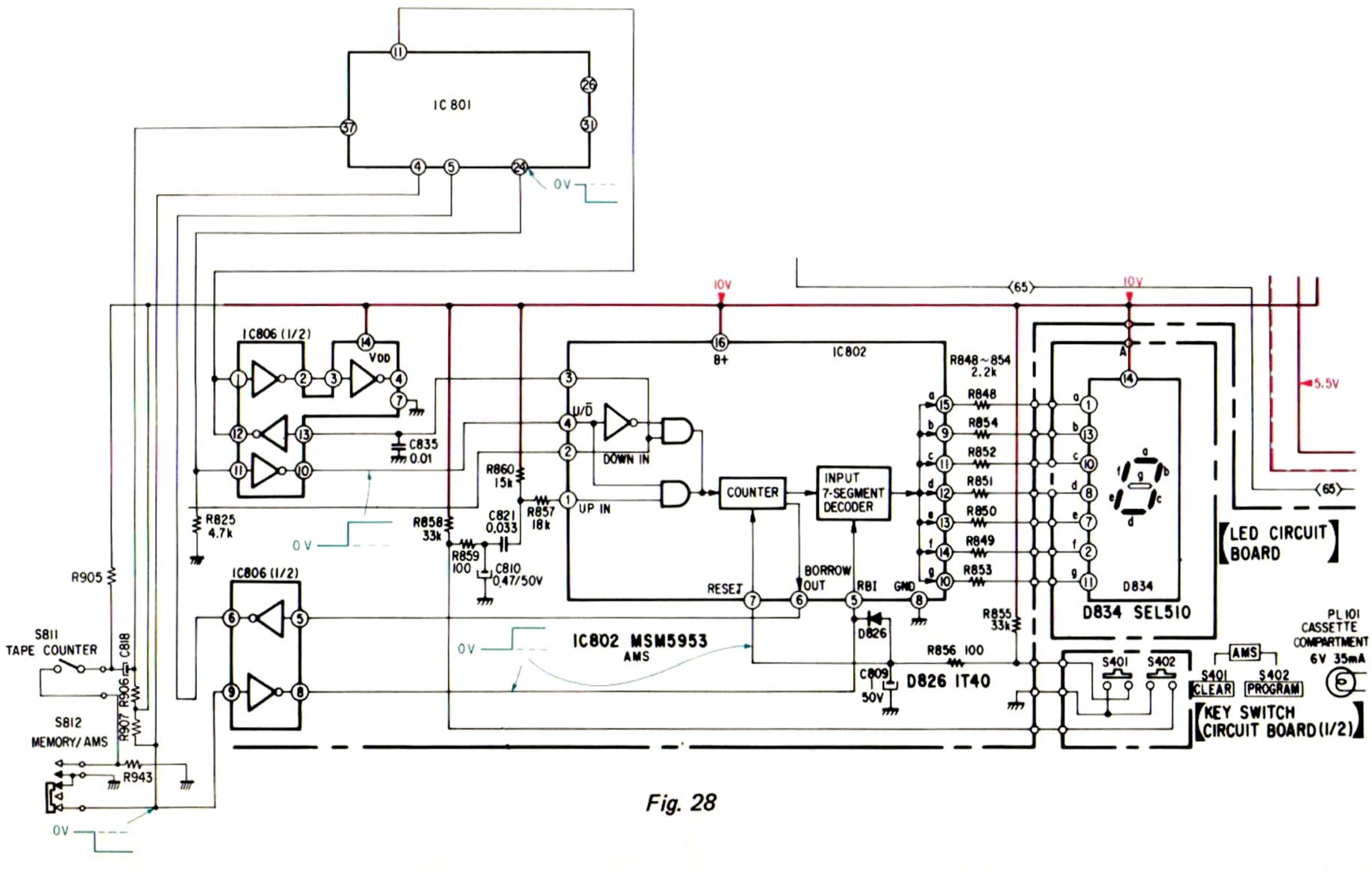


*Fig. 28*



www.hiffiengine.com

## 7. Principle of detecting AMS (automatic music sensor) signal (See Fig. 29)

(1) Set the MEMORY/AMS switch (S812) to AMS position.

(2) Depress simultaneously the forward and fast-forward buttons, or forward and rewind buttons.

(3) The level at terminal 24 of IC801 gets "high", which will be inverted through IC806. Then the level at terminal 4 of IC802 becomes "low", and terminals 2 and 6 of IC802 will be effective.

(4) The level at terminal 25 of IC801 will be "low" and Q826 will turn off. Thus, the muting is released, and the detection of AMS signal is made possible.

(5) The playback signal is amplified through IC807 and applied to the base of Q818 at the collector from which a voltage will appear.

(6) The level at terminal 2 of IC802 becomes "high" so that the counter gets ready for count-down operation in IC802.

(7) During an interval between two successive musics (where no signal is delivered), C811 is discharged through R870 to make the level at terminal 2 of IC802 "low". Thus, count-down is effected. The discharge characteristic of C811 determines whether or not that interval should be taken as inter-music interval.

(8) Next, when the count-down is made from "1" to "0", the level at both terminals 3 and 6 of IC802 gets "high".

(9) The output from terminal 3 of IC802 is shaped, inverted to "low" level through IC806, and applied to terminal 11 of IC801.

(10) The output from terminal 6 of IC802 is inverted by IC806 to "low" level and is applied to terminal 5 of IC801.

(11) Only the fast-forward or rewind mode is cleared, and playback is started.

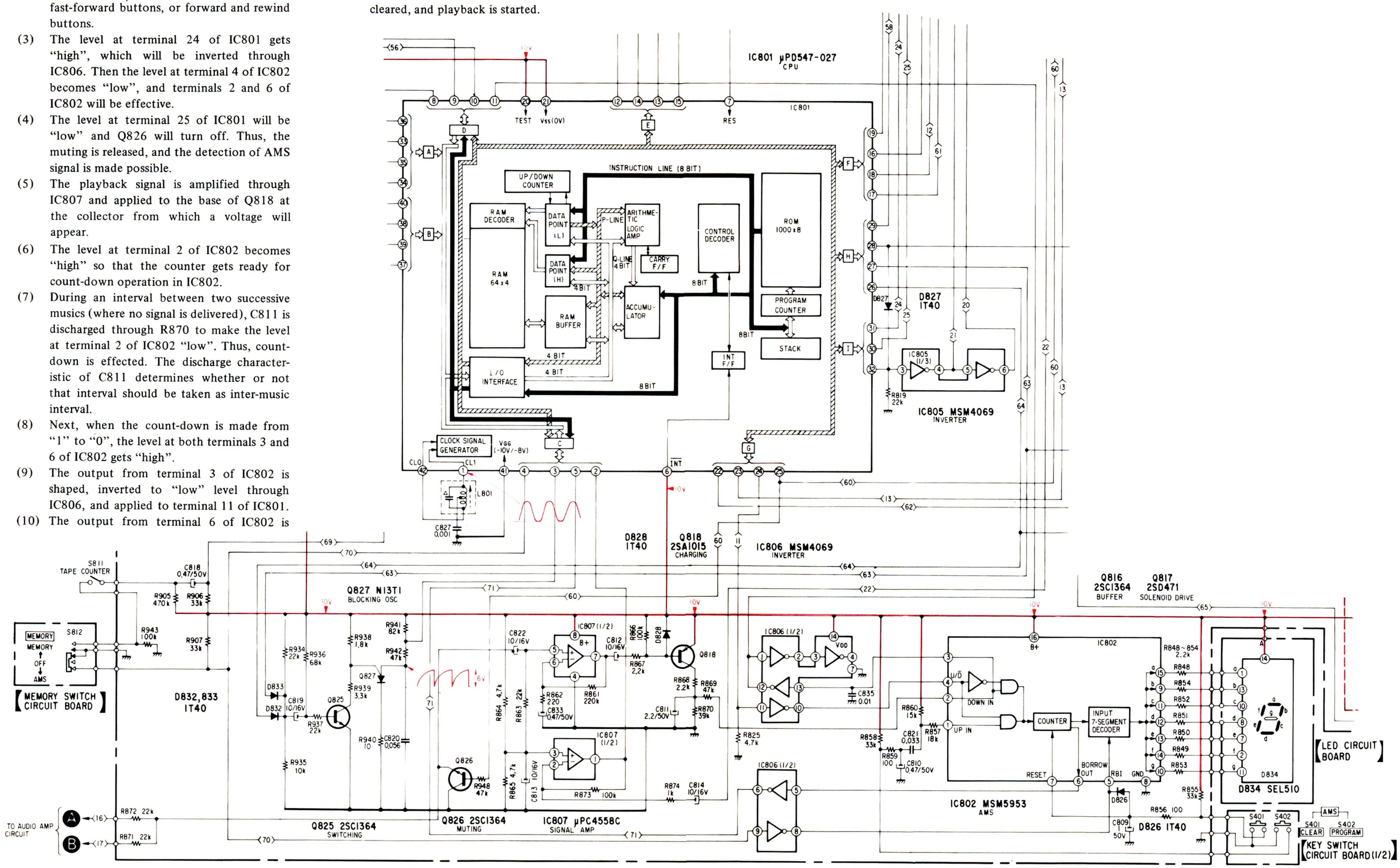


Fig. 29

### 1-4-6. Four-Wire Remote Control Circuit (See Fig. 30)

This remote control circuit is developed to provide a small, lightweight remote control unit with reduced number of wires. Conventional remote controls were equipped with 10 wires, while this new remote control circuit has only four wires and keeps the same function as that of such conventional controls. This circuit consists of J001, IC803 and IC804. A circuit description will be given below:

(1) IC803 is an integrated circuit comprising four-comparator circuits. Each of these comparator circuits has a positive and negative inputs and an output in set. When the potential at the positive input is higher than that at the negative input, there will prevail a potential of 10 volts at the output. On the contrary, if the level at the positive input is lower than that at the negative input, the potential at the output will be zero volt. It should be noted that the output of IC803 is an open collector.

(2) The positive terminals are connected to one another so that the potentials at all of them are identical. The negative terminals are so set that the potentials at the terminals of comparator circuits are as follows: 7 volts at terminal 4; 5 volts at terminal 6; 3 volts at terminal 8; and 1 volt at terminal 1.

(3) The potential at the positive terminals is normally 10 volts. Under this assumption:

- o Press the button "●" (record) of the remote control unit, and the potential at the positive terminals will be 6 volts. Therefore, the first comparator circuit 1 delivers 0 volt at its output (terminal 2); the second comparator circuit 2 delivers 10 volts at the output (terminal 1) thereof; the third comparator circuit delivers 10 volts at its output (terminal 14); and the fourth comparator circuit delivers 10 volts at its output (terminal 13). Since terminal 2 is connected to the record input terminal of IC801, the set becomes in record mode.
- o With the button " ▶▶ " (fast-forward) of the remote control unit depressed, the potential at the positive terminals will be 4 volts; depress the button " ◀◀ " (rewind), and the potential at the positive terminals will be 2 volts; and with the button "■" (stop) depressed, the potential at the positive terminals will be 0 volt. Thus, the comparator circuits will operate sequentially. Upon depressing the "■" (stop) button, there will be delivered 0 volt at all the output of the comparator circuits. Since the inputs have priority one over another, (stop, rewind, fast-forward, forward, pause, record, REC MUTE in this order), stopping will result.

(4) C815, C816, C817 and C824 have been selected in value of capacitance so that the function buttons of higher priority be returned more slowly when they are released. Further, R911, R912 and R913 have been so selected in value of resistance that function buttons of higher priority be set more preferentially fast when they are depressed.

(5) IC804 is a dual operational amplifier, but may be considered as comparator circuits of satisfactory linearity.

(6) Since the output of IC803 is open-collector, this IC will not be damaged when any function button connected in parallel to this circuit is pressed. However, since the output of IC804 is complementary, the circuit may possibly be damaged if any function button connected to the circuit is depressed. To avoid such damage, D829 and D830 are provided for protecting IC804.

(7) IC804 is an integrated circuit having two comparator circuits built therein. The positive terminals are connected together for a same voltage thereon. The negative terminals are so set that the comparator circuits will deliver 6.7 volts at terminal 2 thereof, and 4.7 volts at terminal 6.

(8) The potential at the positive terminals of IC804 is normally 10 volts. Under this assumption:

- o With the " ▶ " (forward) button of the remote control unit depressed, the potential at the positive terminals becomes 5.3 volts. Consequently, the comparator circuit 5 will deliver 0 volt at its output (terminal 1), and 10 volts at the output (terminal 7). Since terminal 1 is connected to the forward input terminal of IC801, the set becomes in playback mode.
- o Depress the " ◘ " (REC MUTE) button of the remote control unit, and the potential at the positive terminals of IC804 will be 4.3 volts. Therefore, the comparator circuit 6 will deliver 0 volt at its output (terminal 7). Thus, the comparator 5 will receive 3.1 volts at terminal 2 thereof so that the output will be 10 volts at terminal 1. In this way, playback mode is cleared.
- o When both the forward and REC MUTE buttons are pressed at a time, the potential at the positive terminal becomes 3 volts. The comparator circuits will deliver 0 volt at their respective outputs.



www.hifiengine.com

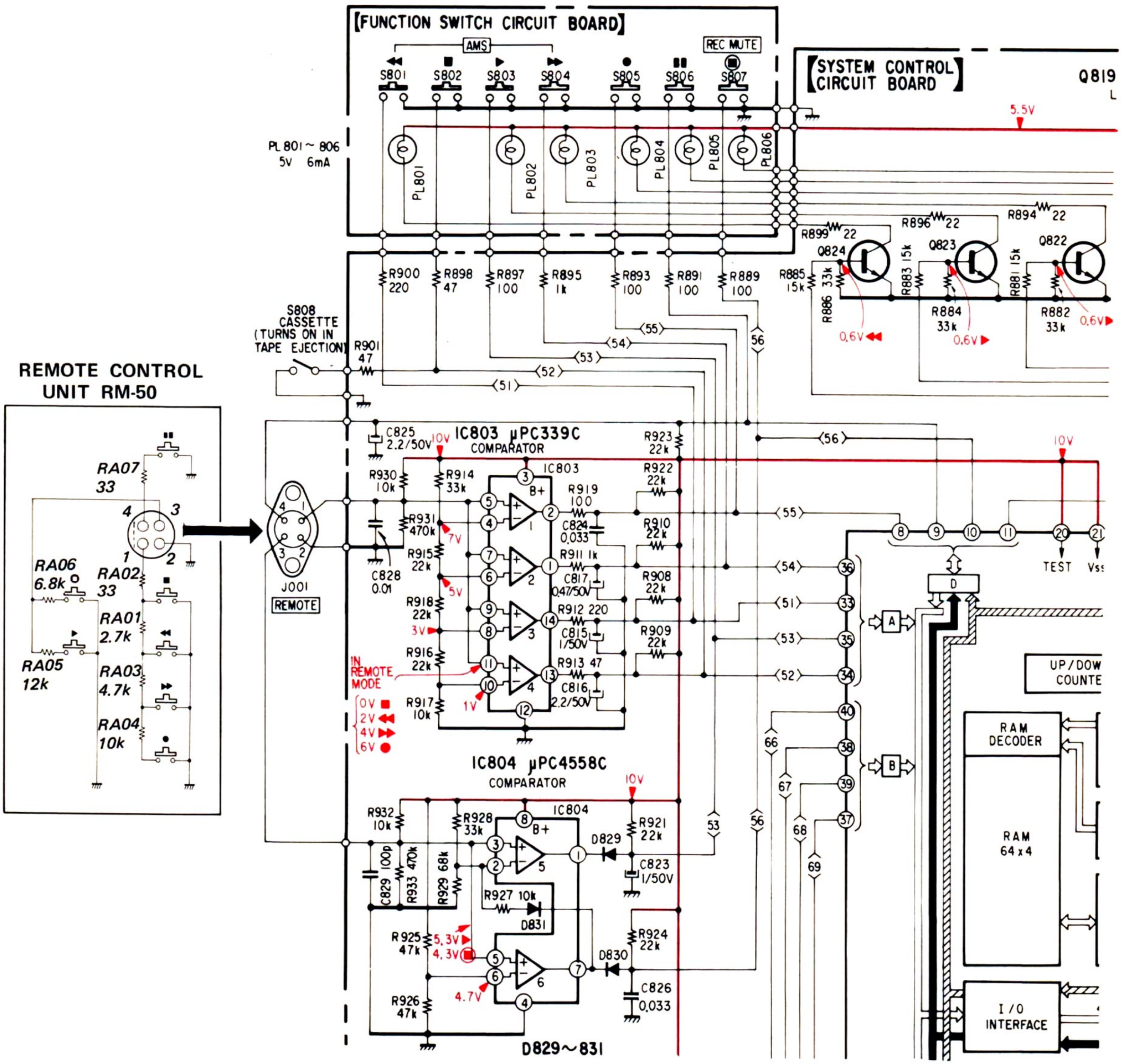


*Fig. 30*



www.hifiengine.com

## 1-5. BLOCK DIAGRAM

### 1) – System Control Section –

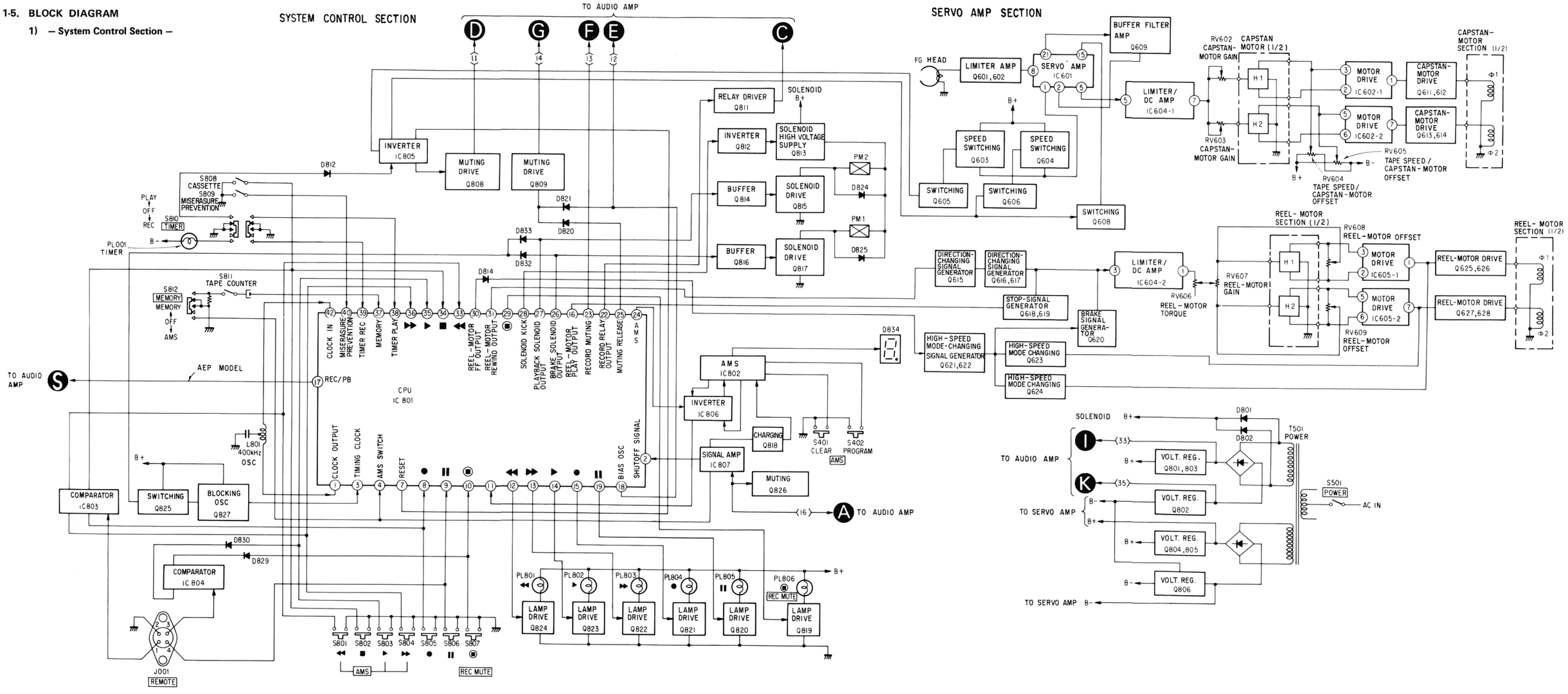

## 2) — Audio Amp Section —

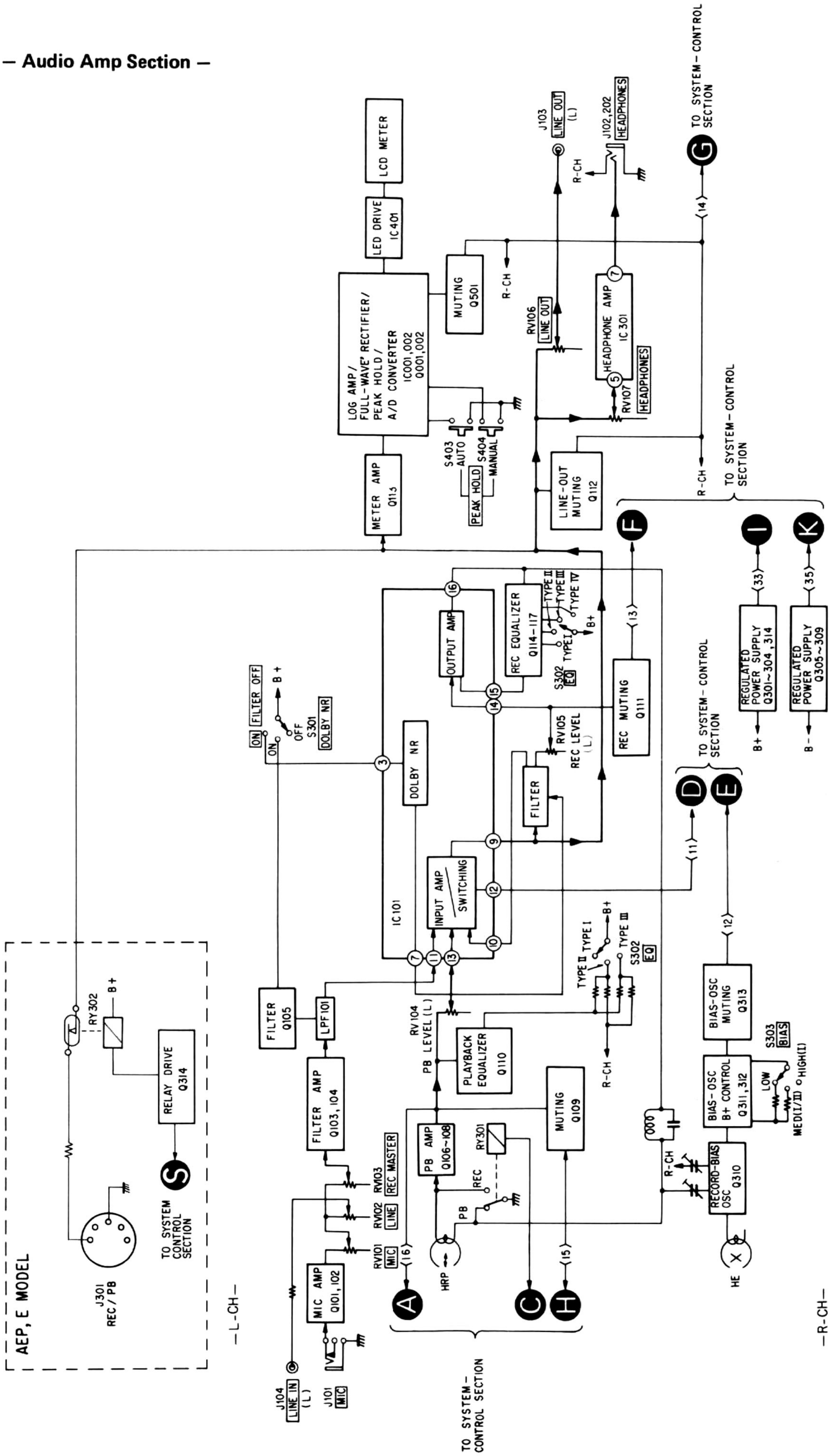

# SECTION 2
# DISASSEMBLY

- **Follow the disassembly procedure in the numerical order given.**

## Top Cover Removal

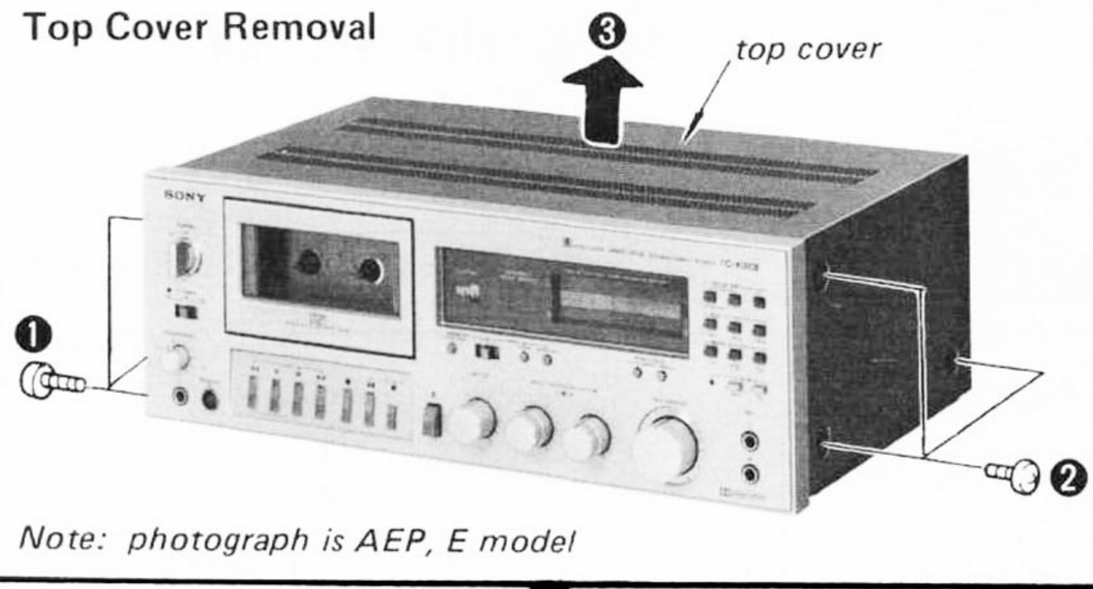


*Note: photograph is AEP, E model*

## Bottom Plate Removal

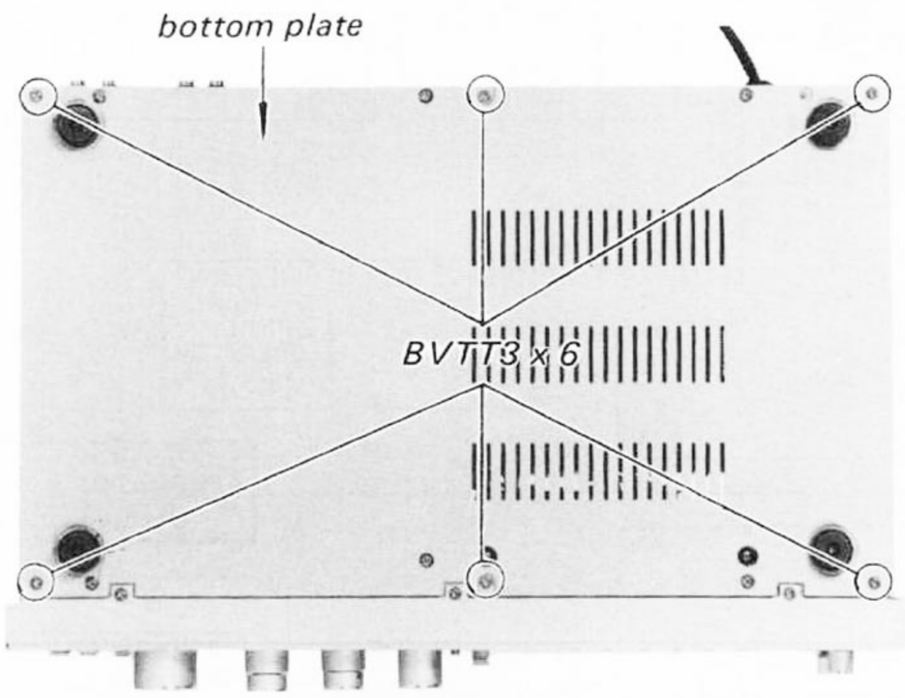


## LCD Meter Block Removal

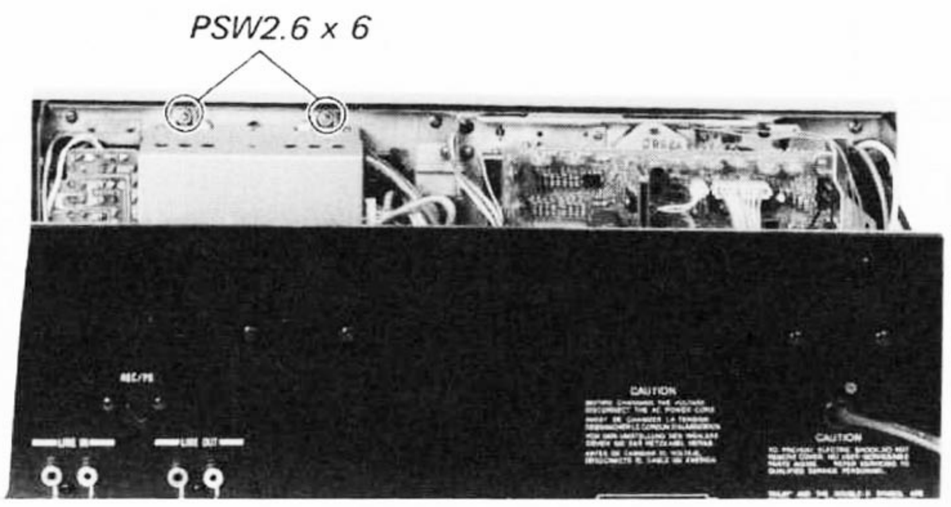


## Cassette Lid Removal

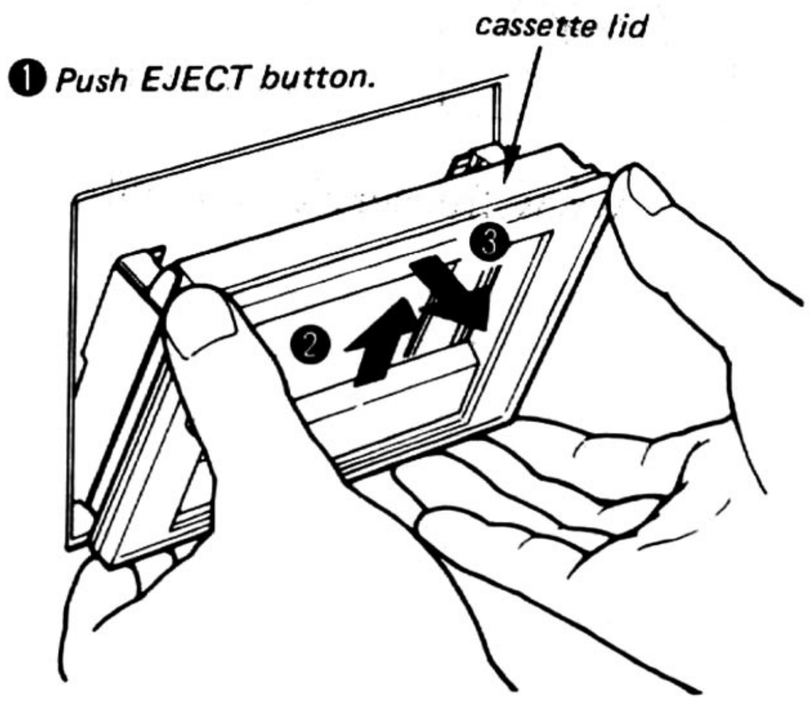


## Front Panel Removal

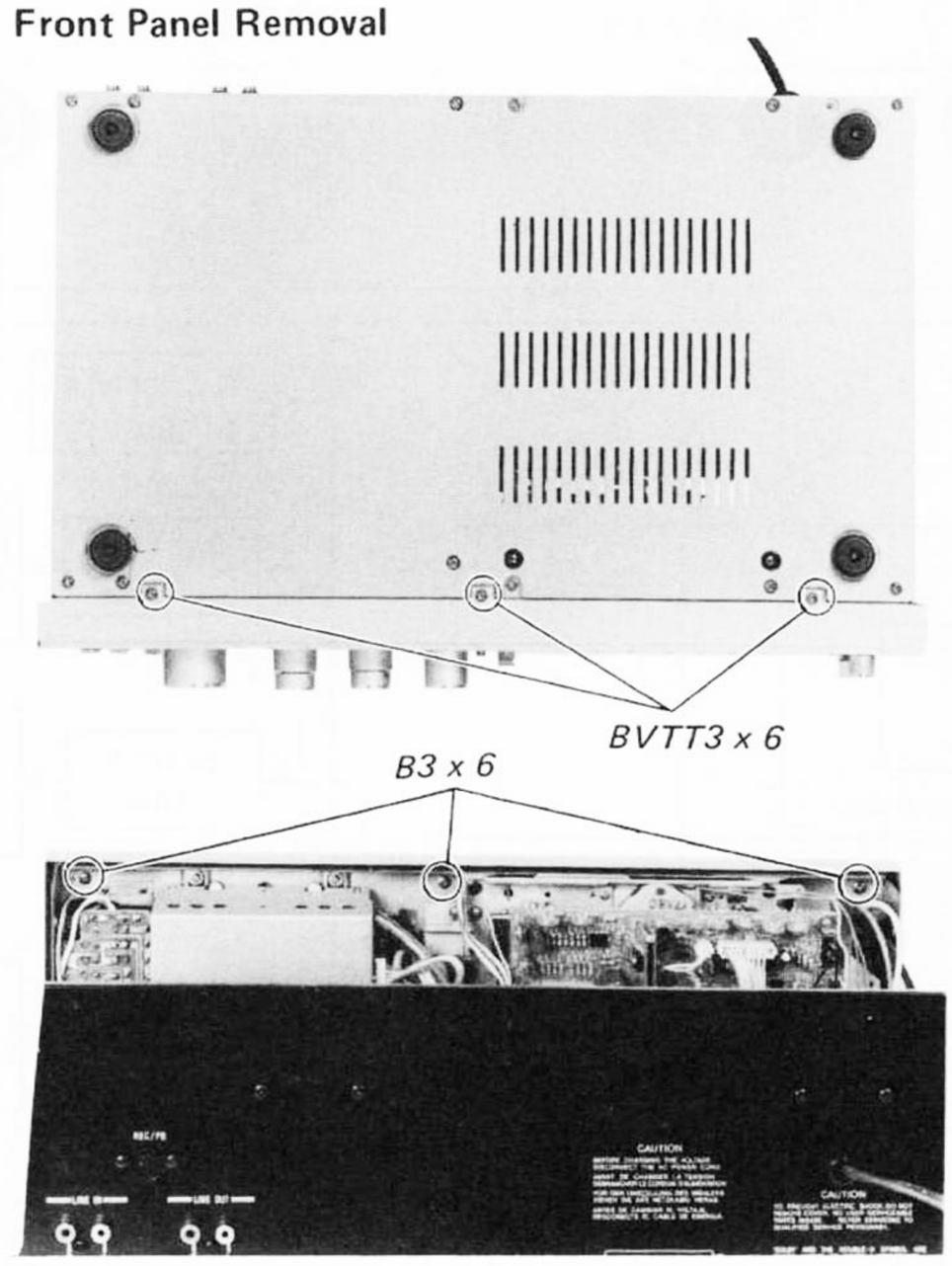


## Mechanism Chassis Removal

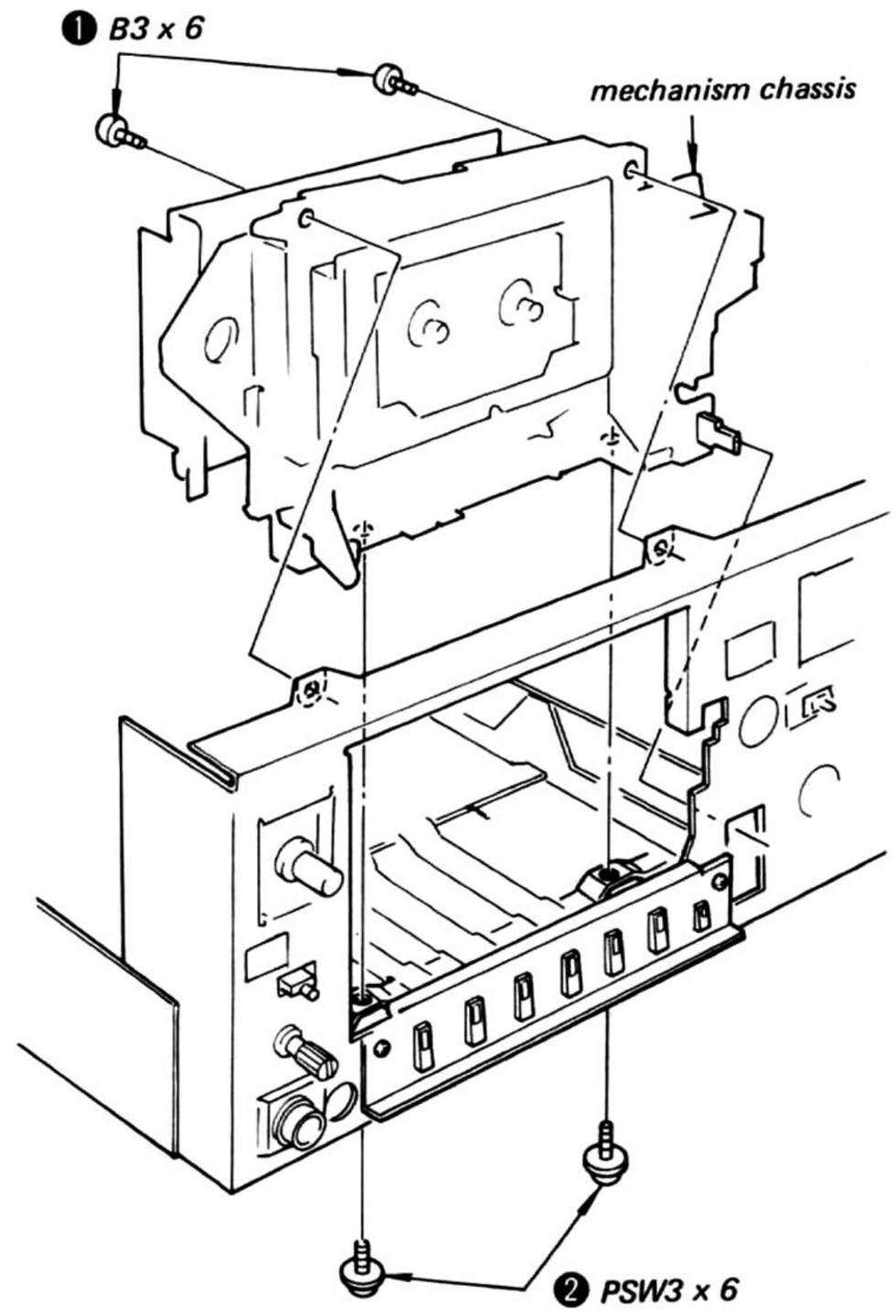




www.hifiengine.com

## Cord Stringing of Cassette-Lid Control Mechanism

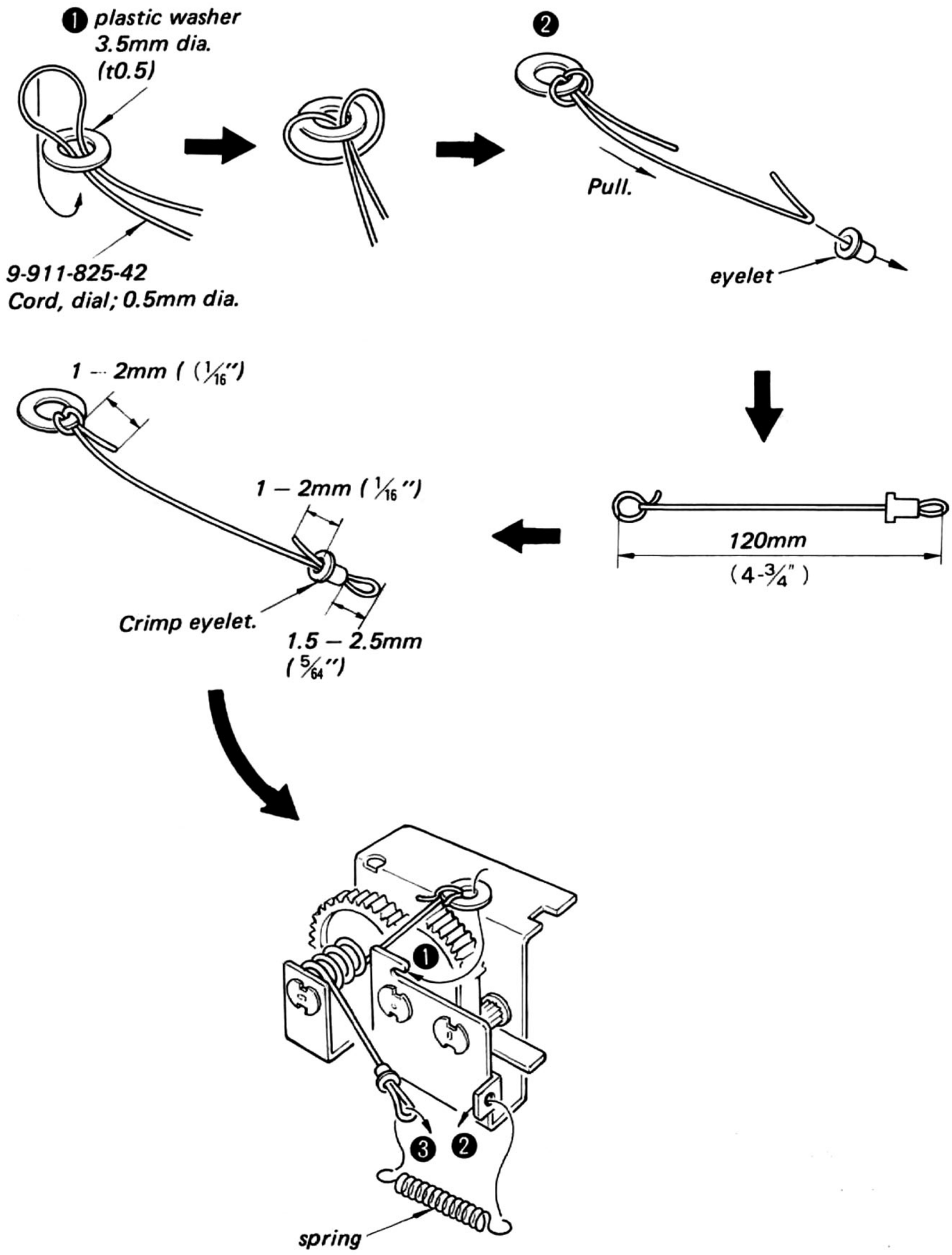

# SECTION 3
# ADJUSTMENTS

### PRECAUTION

1. Clean the following parts with a denatured-alcohol-moistened swab:

   record/playback head — pinch roller
   erase head — rubber belts
   capstan — idlers

2. Demagnetize the record/playback head with a head demagnetizer.
3. Do not use a magnetized screwdriver for the adjustments.
4. After the adjustments, apply a suitable locking compound to the parts adjusted.
5. The adjustments should be performed with the rated power supply voltage unless otherwise noted.

## 3-1. MECHANICAL ADJUSTMENTS

**Head Height Adjustment**
**– Playback Mode –**

1. Make an adjustment cassette as shown below, or use a mirror cassette.

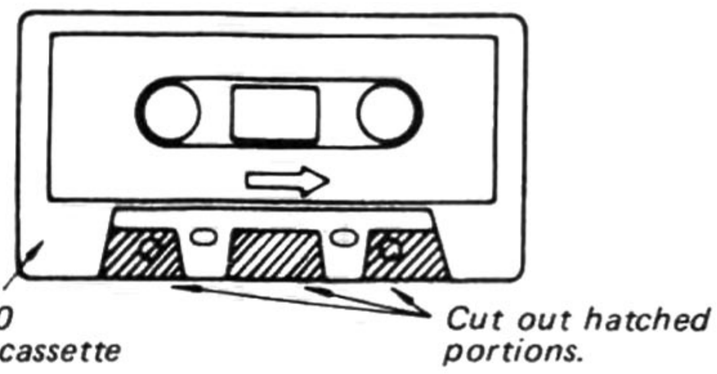


2. In playback mode and viewing from the front, adjust the head heights to eliminate tape curl and tape twist at arrowed portions.

**Brake Torque Measurement**
**– Stop Mode –**

| | Torque meter | Torque |
|---|---|---|
| Eating direction | Tonichi model | 50 – 200g·cm (0.69 – 2.67oz·inch) |
| Backward direction | | 20 – 100g·cm (0.27 – 1.39oz·inch) |

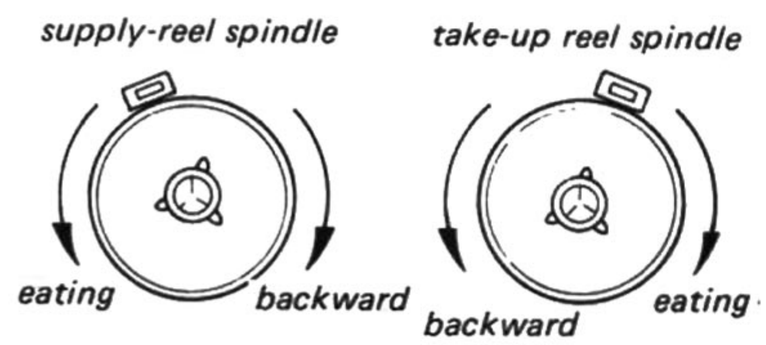


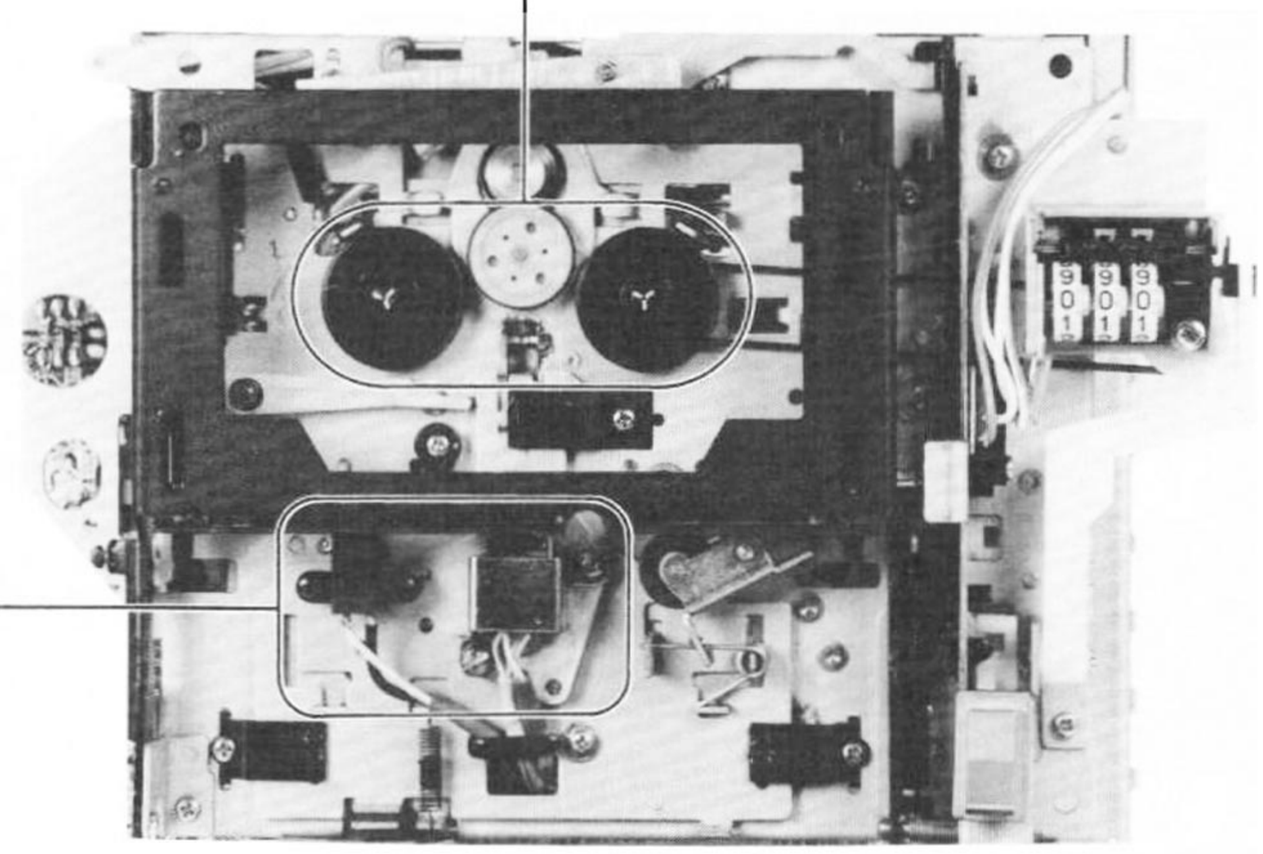

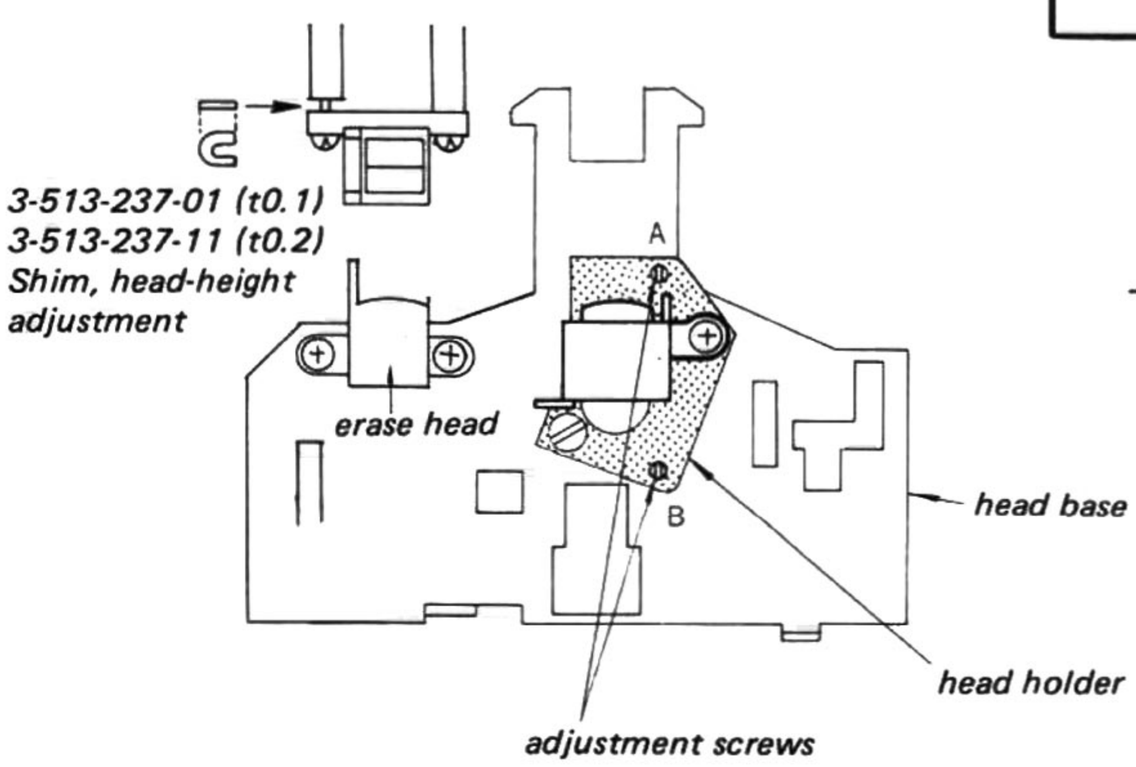


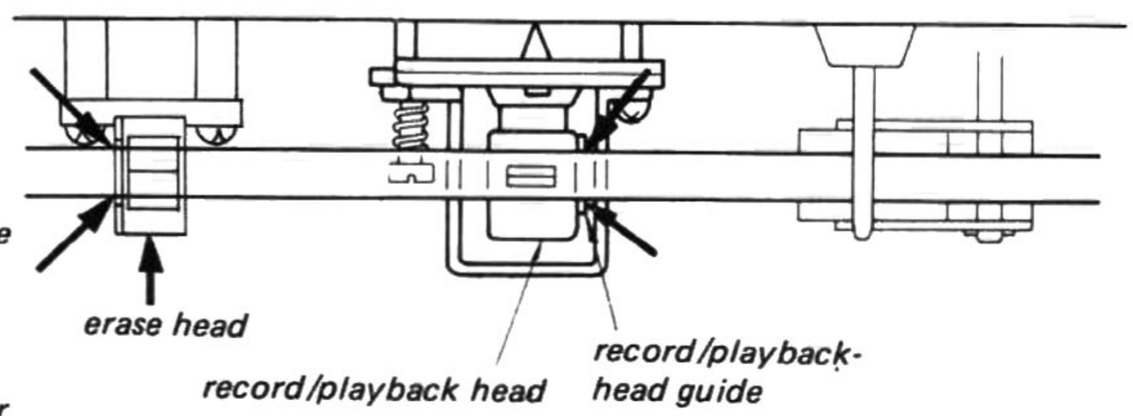




www.hifiengine.com

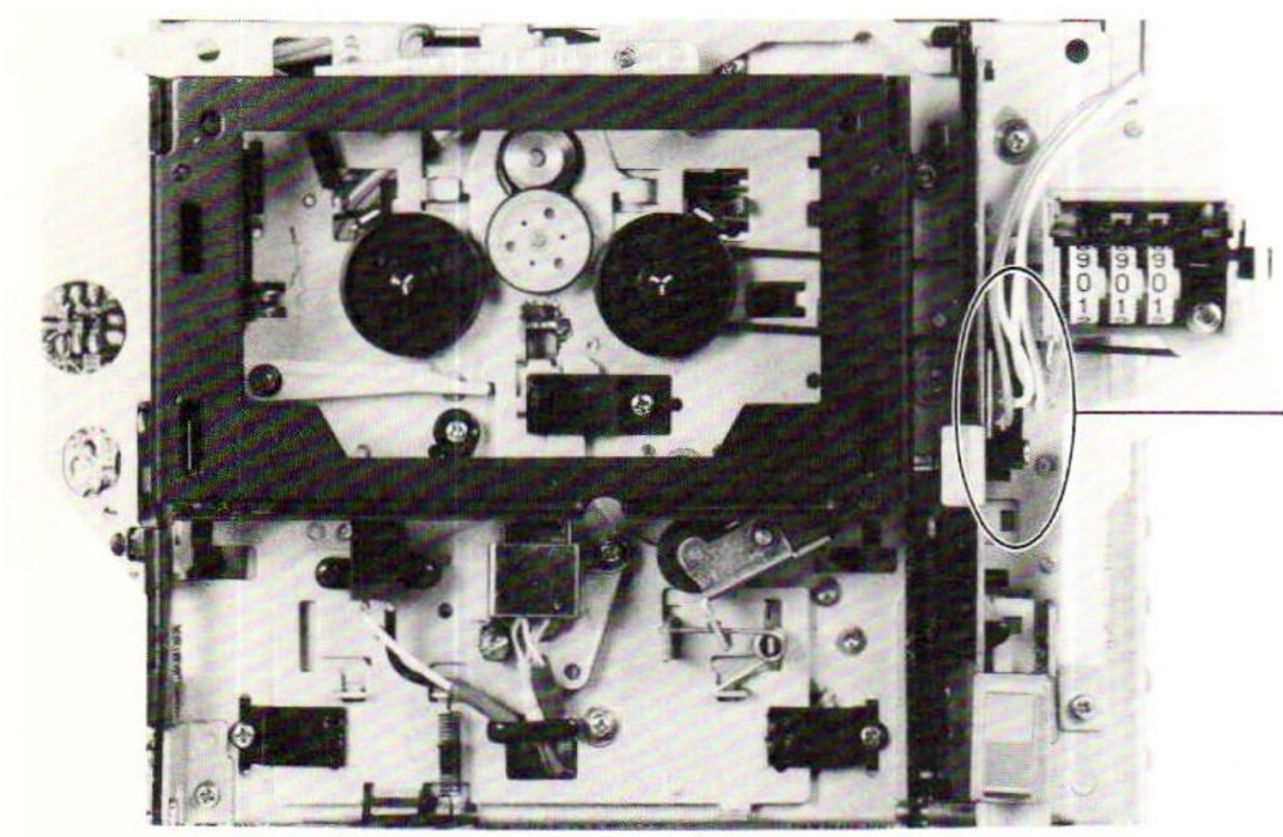

**Cassette Switch (S808) Position Adjustment**
**– Stop Mode –**

1. Push EJECT button and open the cassette lid.
2. Loosen the adjustment screw and adjust the switch position so that the clearance between the switch-tip end and lock slider becomes the specified value.
3. Tighten the screws after the adjustment.

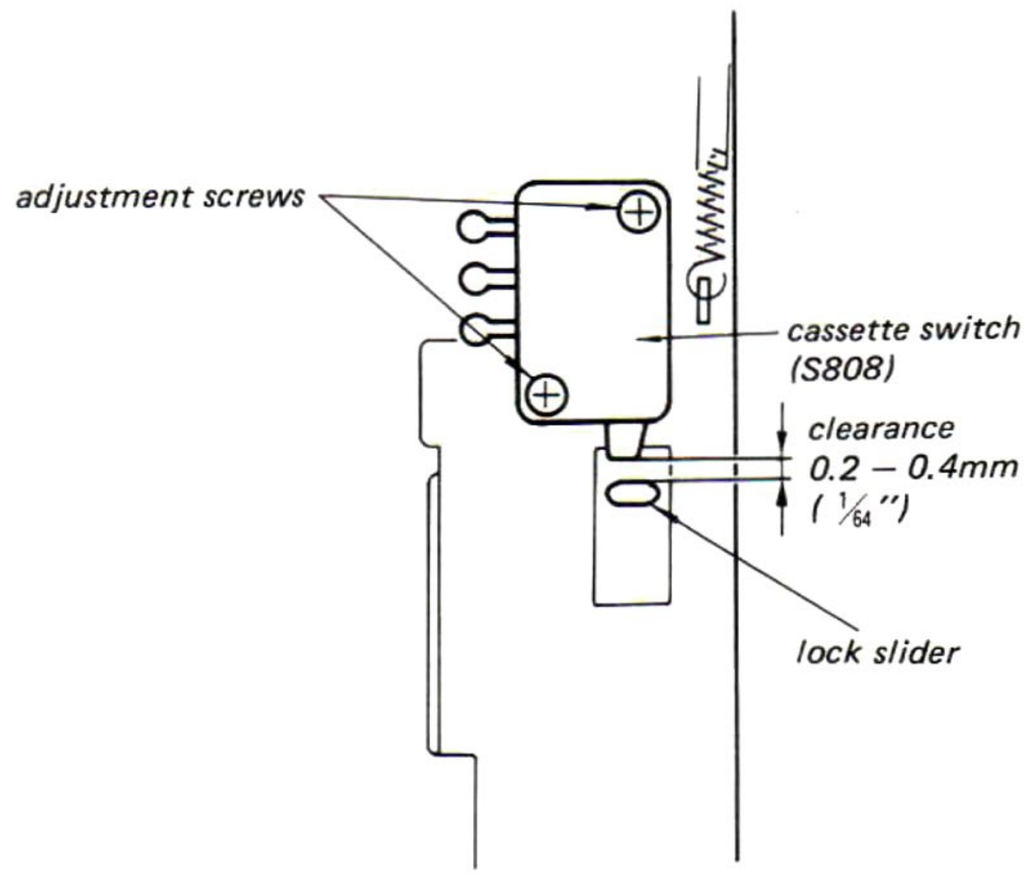




www.hifiengine.com

## Solenoid Position Adjustment

1. Head Solenoid (PM2)
   1) Push the pole piece in the head solenoid.
   2) Loosen the adjustment screw and adjust the solenoid position so that the clearance ❶ becomes the specified value.
   3) Tighten the screw.
   4) Confirm that the specified clearance ❸ exists between the eject-prevention arm and eject lever.
   5) Release the pole piece.
2. Brake Solenoid (PM1)
   1) Push the pole piece in the brake solenoid.
   2) Loosen the adjustment screw and adjust the solenoid position so that the clearance ❷ becomes the specified value.
   3) Tighten the screw.
   4) Confirm that the specified clearance ❸ exists between the eject-prevention arm and eject lever.
   5) Release the pole piece.

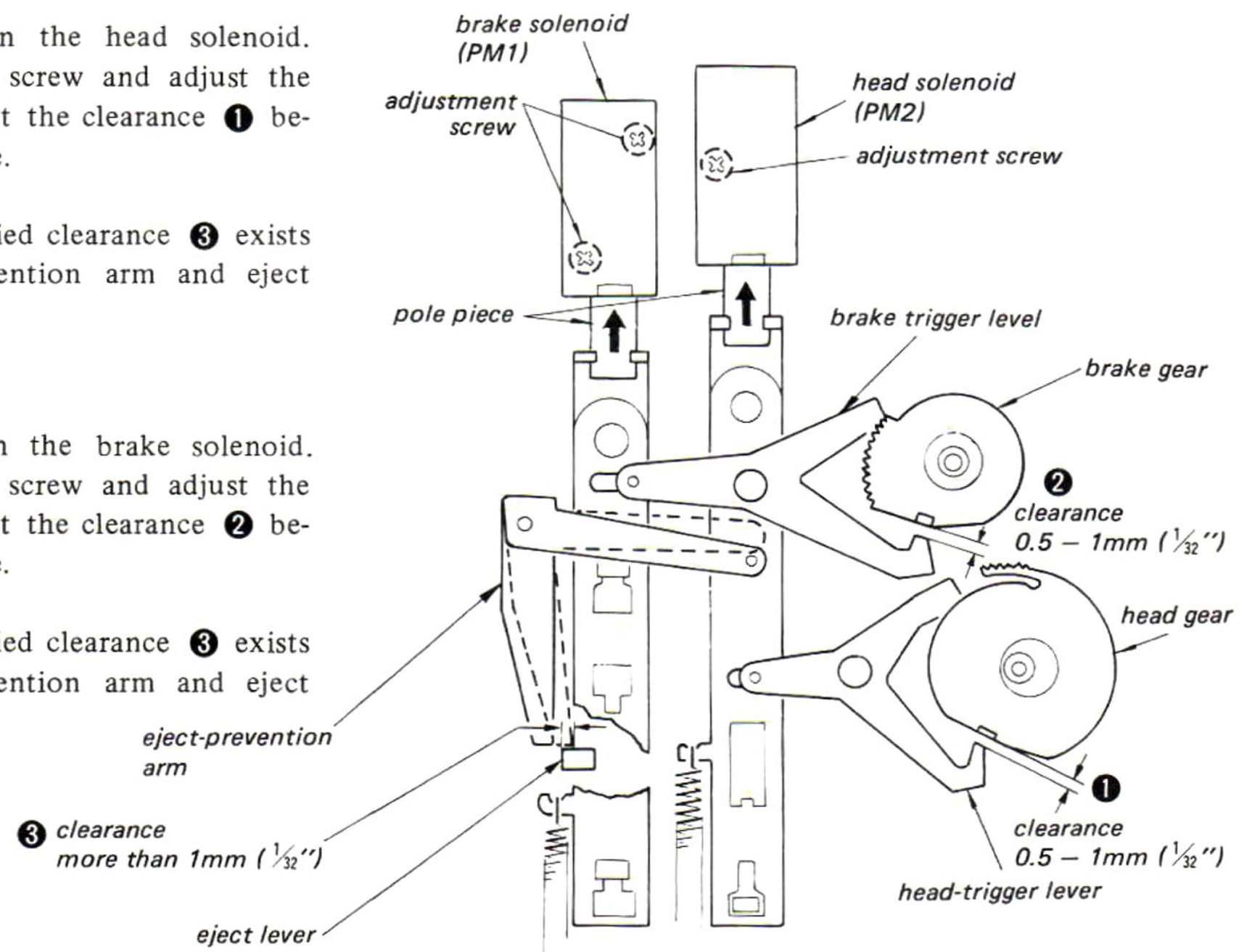


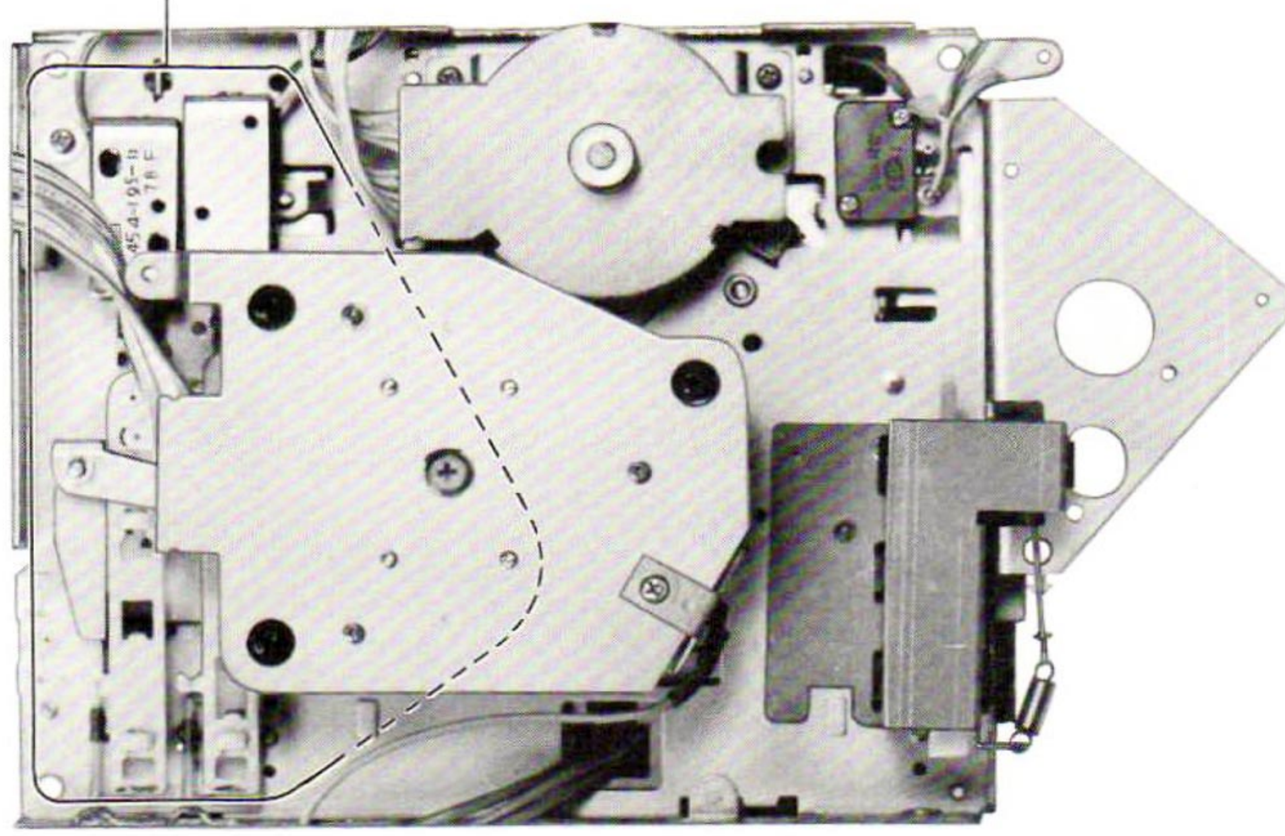



www.hifiengine.com

**Rotor Thrust Adjustment**
**– Playback Mode –**

1. Loosen and then tighten the thrust screw until the rotor just starts rotating.
2. Further tighten the screw in ¾ turns so that the clearance ❶ becomes 0.37mm ( 1/64" ).
3. Confirm a clearance Ⓐ should exist between the gear and rotor-shaft bearing.

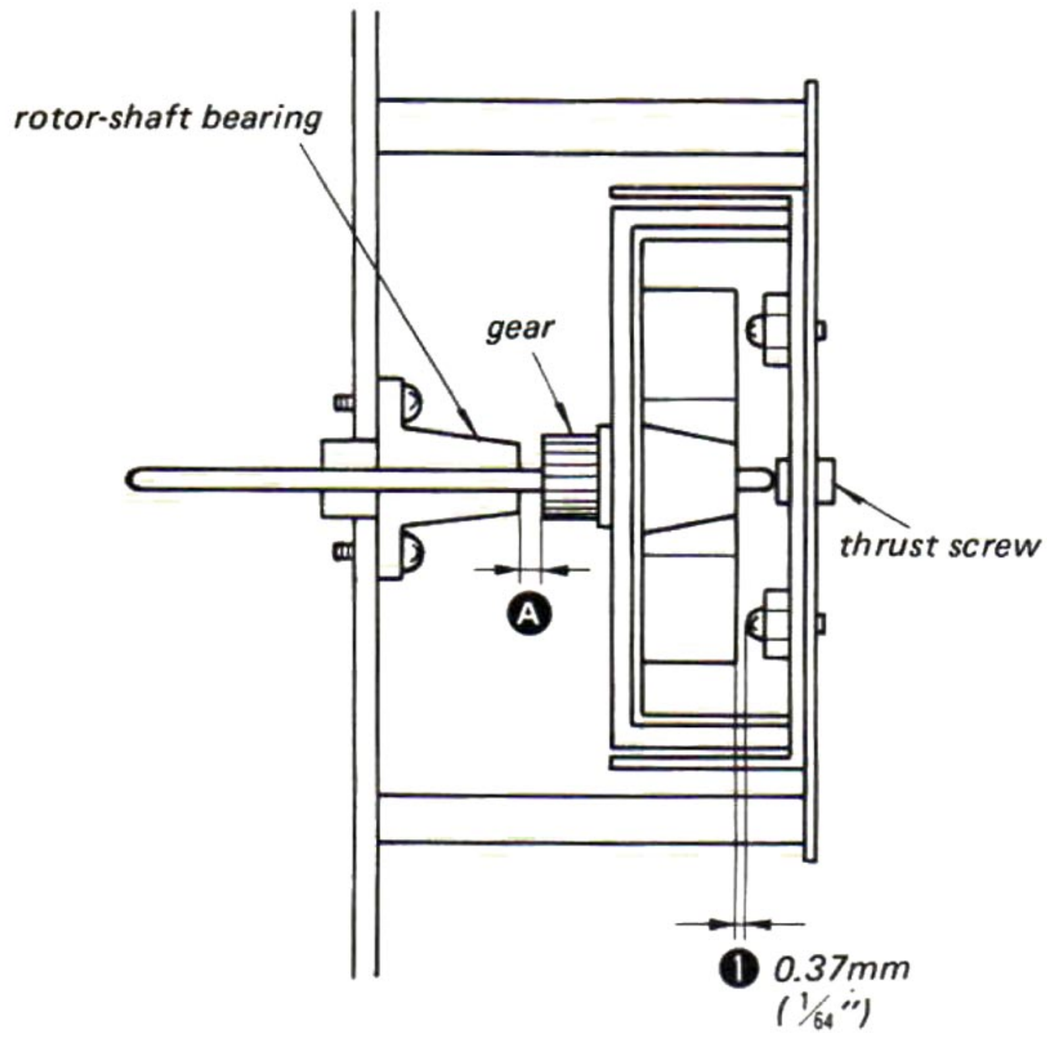


**Accidental Erasure Prevention Switch (S809) Position Adjustment**
**– Stop Mode –**

1. Install a tape cassette with miserasure prevention claws.
2. Loosen the adjustment screws, and adjust the switch position to obtain the specified clearance.
3. Tighten the screws after the adjustment.

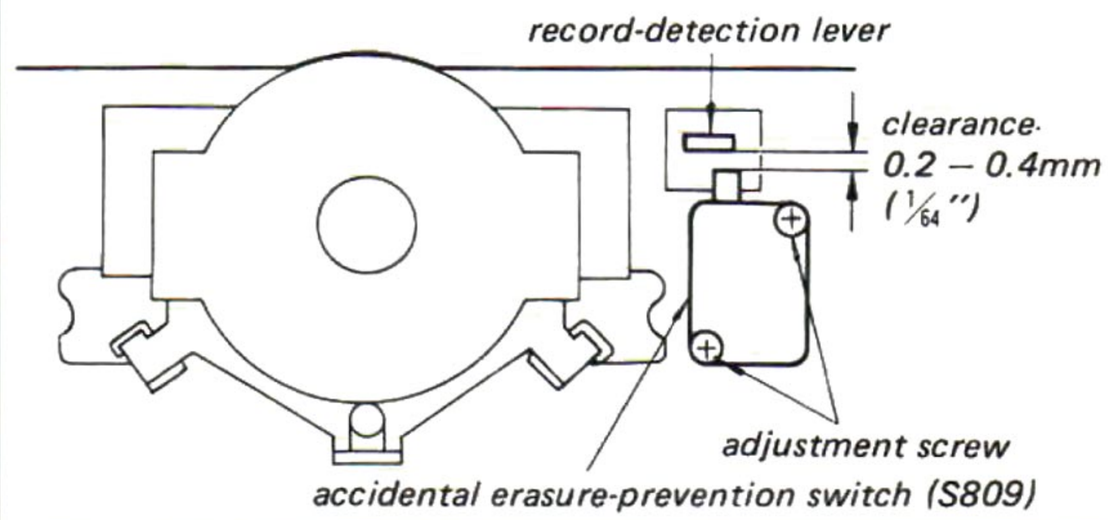


**FG Head Position Adjustment**
**– Stop and Playback Modes –**

1. In stop mode, loosen the adjustment screw and insert a name card between the rotor's FG ring and FG head so that the clearance becomes the specified value.
2. Tighten the screw, and remove the name card.
3. In playback mode, confirm that FG output of 100mVp-p – 200mVp-p present at TP601 on the servo-amp circuit board.

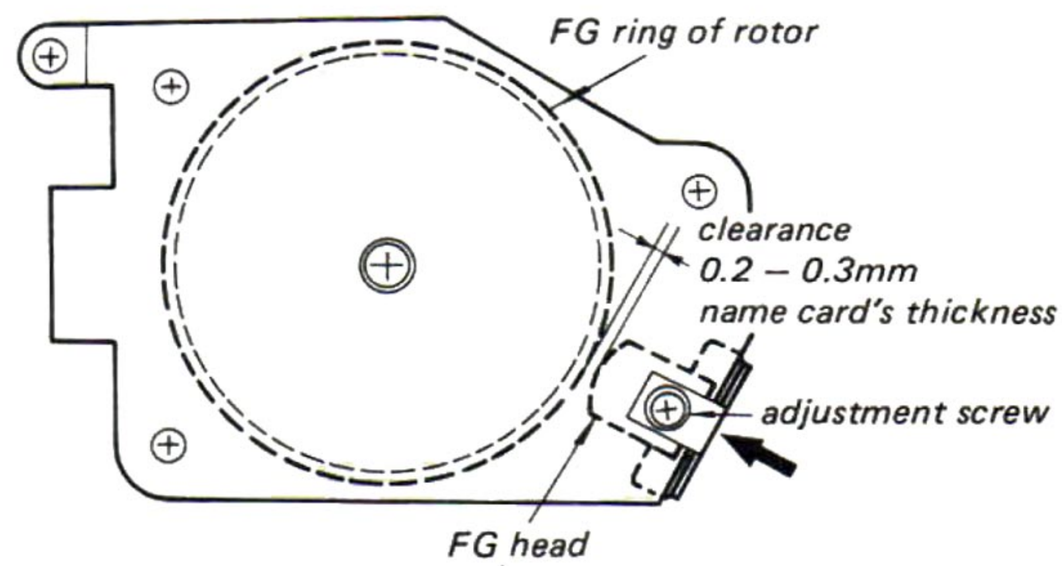


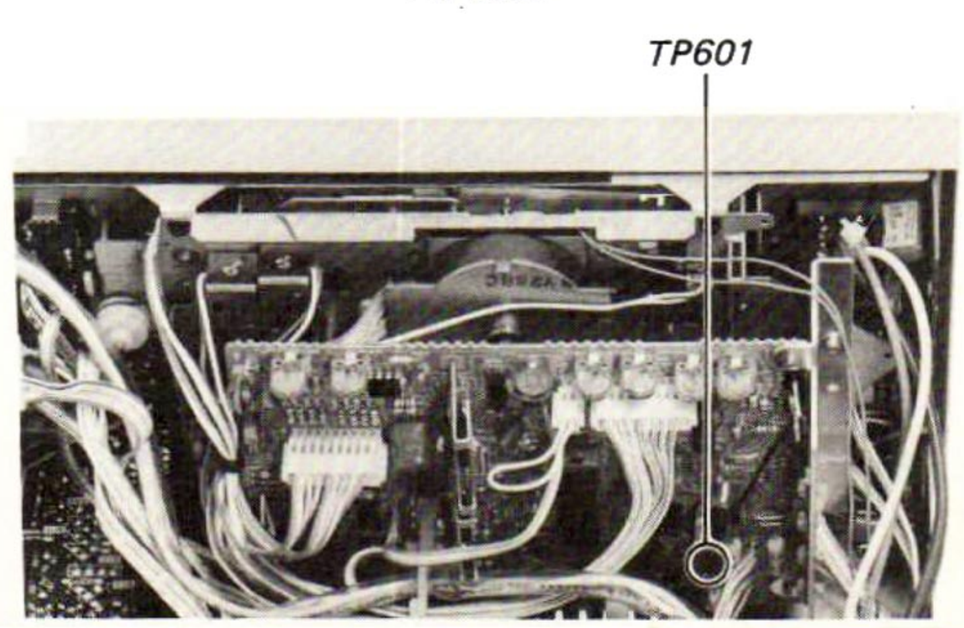




www.hifiengine.com

**Forward Back-tension Adjustment**
**– Playback Mode –**

1. Install Sony Torque Meter CQ-102A in the set.
2. Adjust the spring-hooking position to obtain a forward back-tension torque of 2 – 5g·cm (0.03 – 0.06oz·inch).

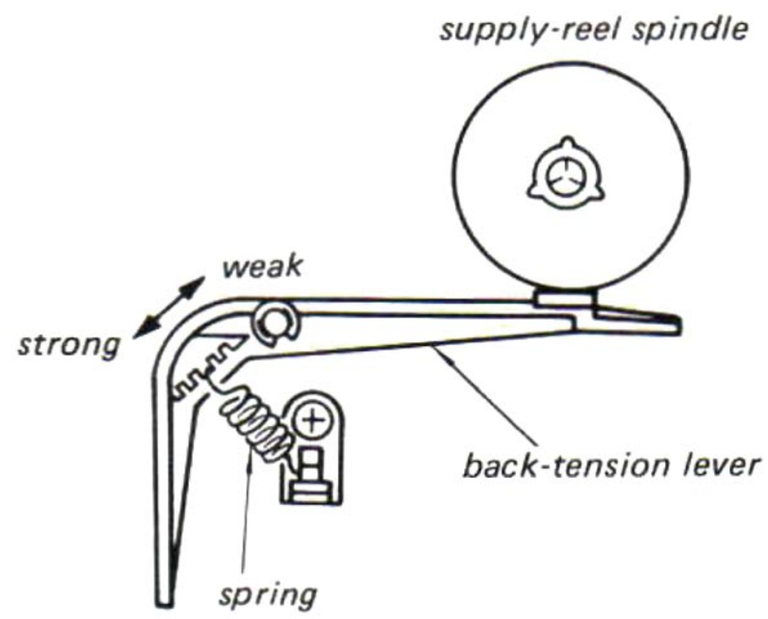


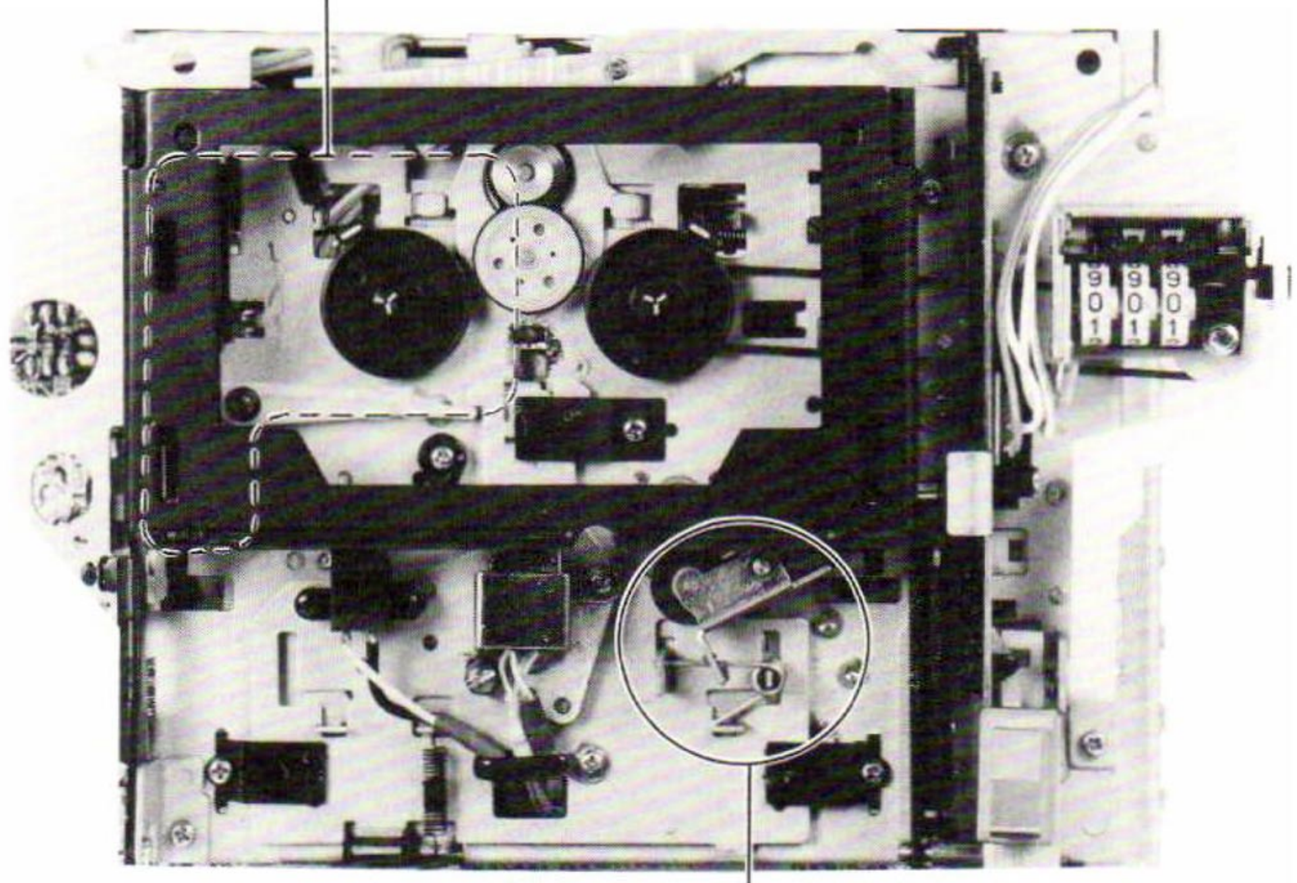

**Pinch-Roller Pressure Measurement**
**– Playback Mode –**

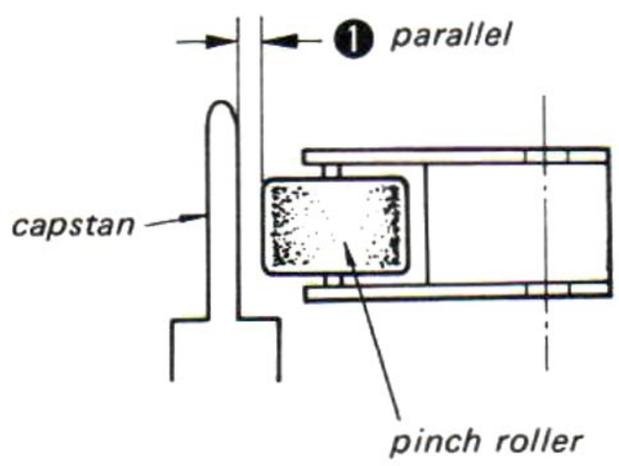


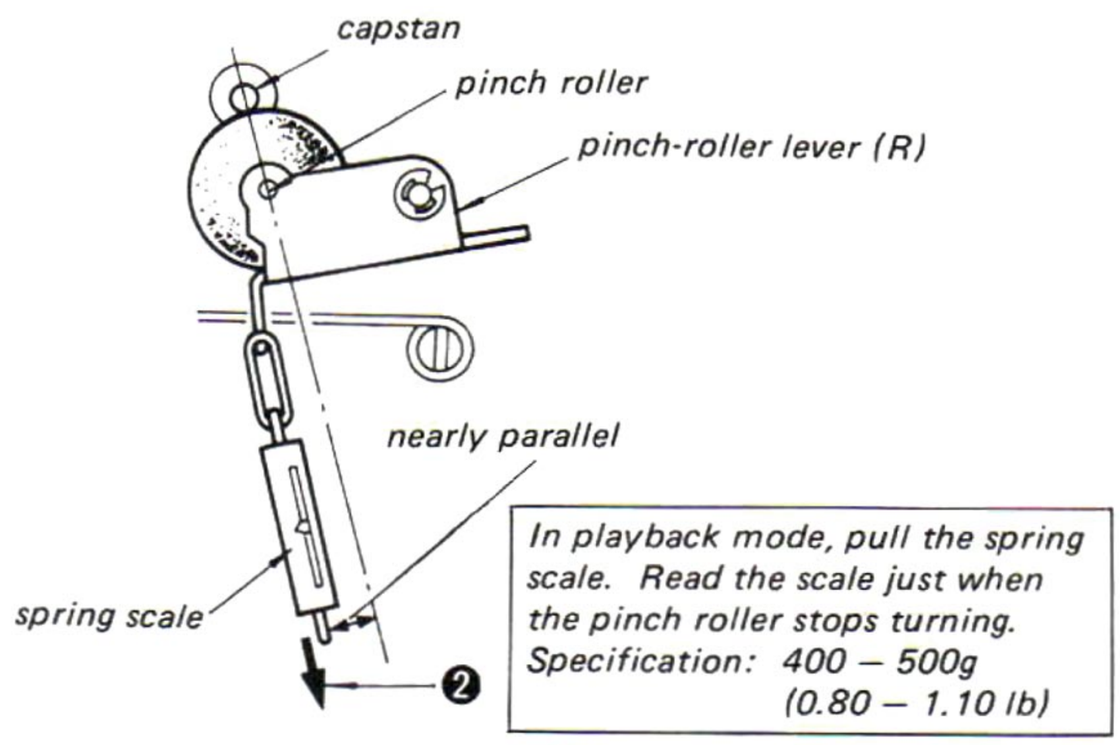




www.hifiengine.com

## 3-2. ELECTRICAL ADJUSTMENTS

**Note:** The adjustment should be performed in the order given in this service manual. The adjustments should be performed for both L-CH and R-CH.

- Set the BIAS and EQ switches according to the tape as follows.

| Tape | BIAS switch | EQ switch |
|---|---|---|
| CS-10 | MED | TYPE I |
| CS-25 | HIGH | TYPE II |
| CS-30 | MED | TYPE III |
| CS-40 | TYPE IV | TYPE IV |

- Switches and controls should be set as follows unless otherwise specified.

DOLBY NR switch: OFF
EQ switch: TYPE I
BIAS switch: MED
LINE OUT control: 10 (max)
MIC control: 10 (max)
LINE control: 10 (max)
REC MASTER control:
at the position where the standard LINE OUT level is obtained with the standard MIC or LINE IN input level.
TIMER switch: OFF
MEMORY AMS switch: OFF
REC MUTE switch: OFF

- Standard Record:

Deliver the standard input signal level to the input jack and set the REC LEVEL control to obtain the standard output signal level.

Standard Input Level

| | MIC | LINE IN |
|---|---|---|
| source impedance | 300Ω or 600Ω | 10kΩ |
| input level | 0.77mV (−60dB) | 0.25V (−10dB) |

Standard Output Level

| | LINE OUT | HEADPHONES |
|---|---|---|
| load impedance | 47kΩ | |
| output level | 0.44V (−5dB) | 0.775V (0dB) |

### Tape Speed Adjustment

**Procedure:**

Mode: playback

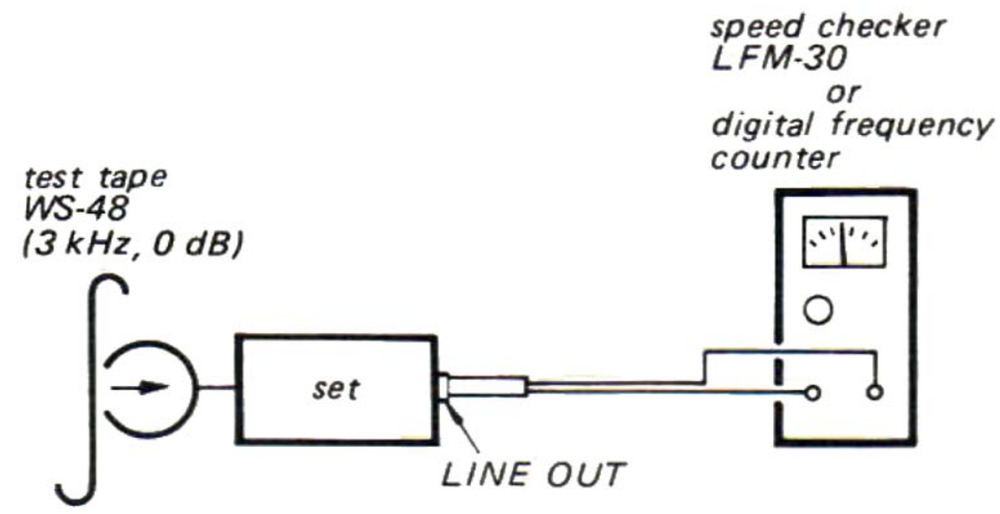


**Specification:**

| Speed checker | Digital frequency counter |
|---|---|
| −0.3 to +0.3% | 2,990 to 3,010Hz |

Frequency difference between the beginning and the end of the tape should be within 0.3% (10Hz).

**Adjustment Location:**

*— survo amp board —*

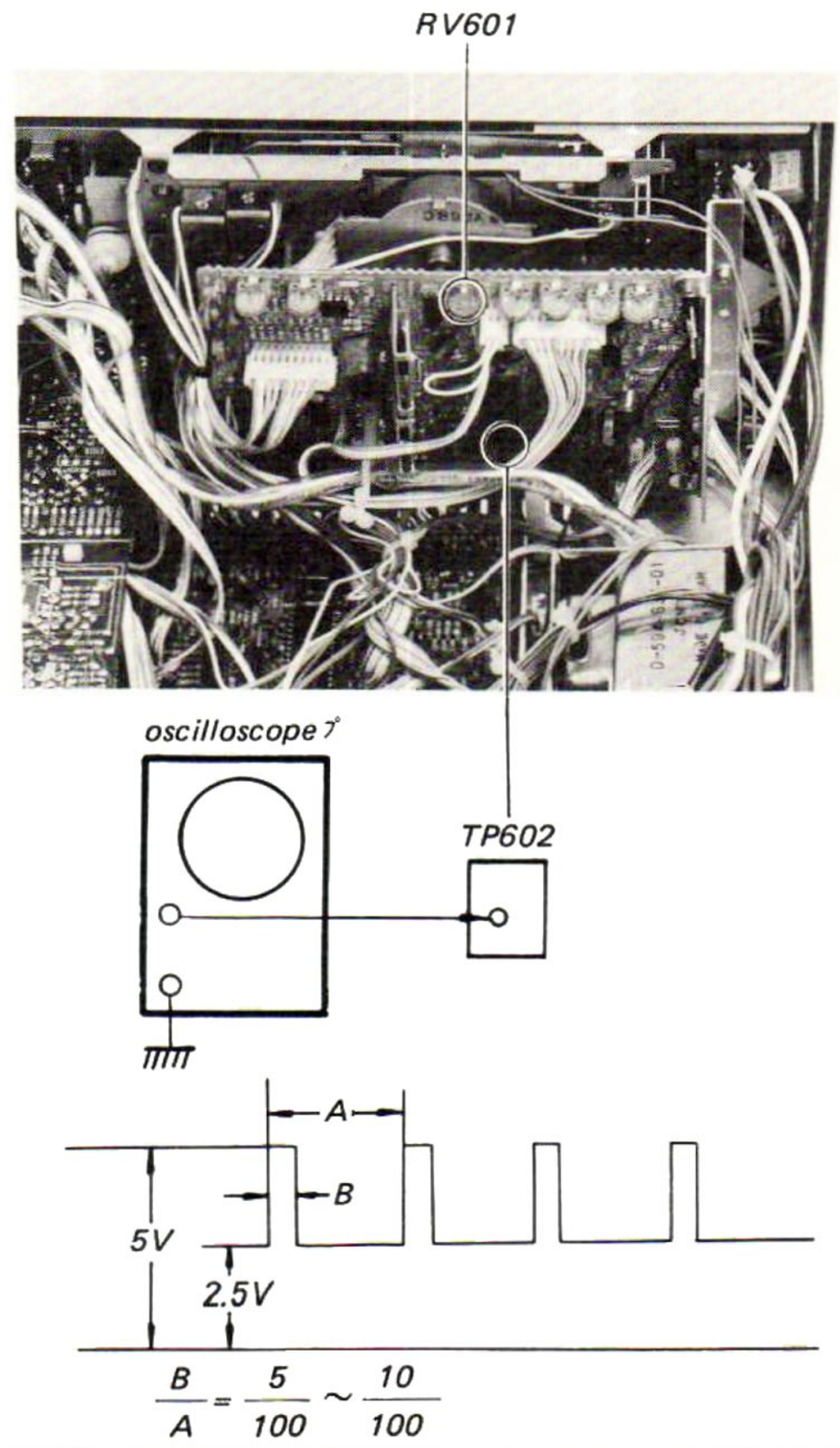

## Record/playback Head Azimuth Adjustment

**Procedure:**

1. Mode: playback

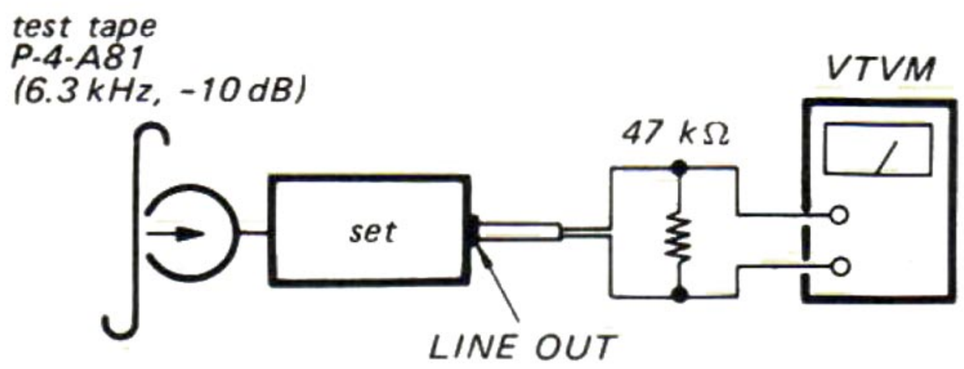


2. Turn the adjustment screw for the maximum output levels. If these levels do not match, turn the adjustment screw until both of output levels match together within 0.5 dB.

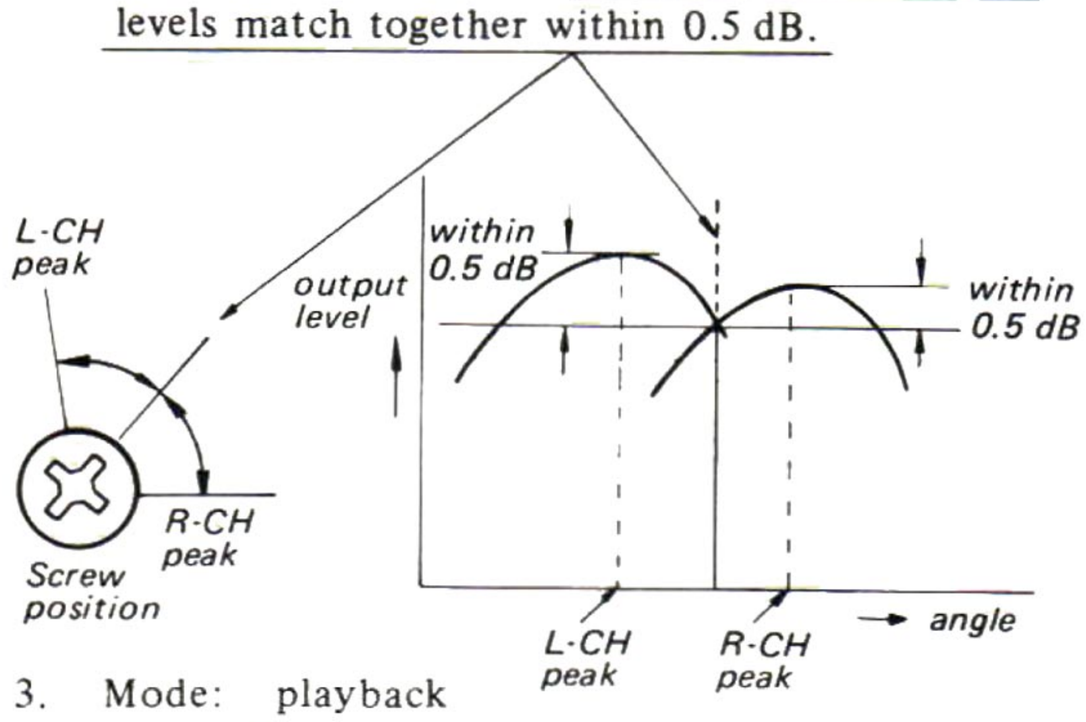


3. Mode: playback

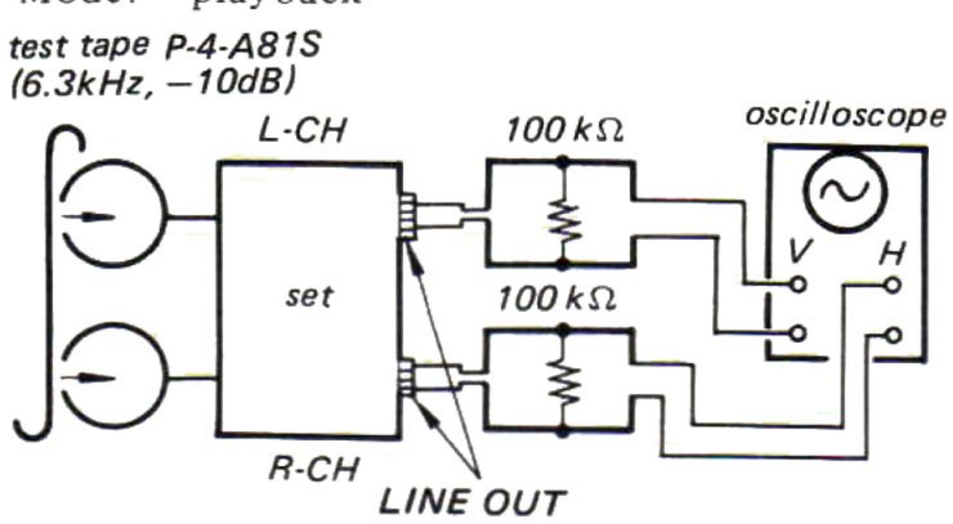


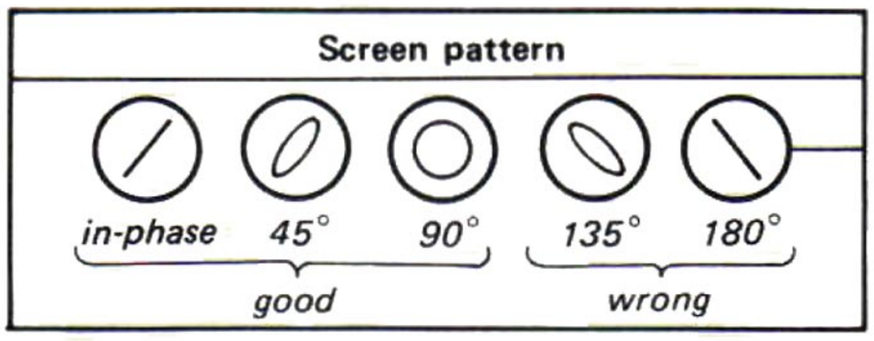


**Adjustment Location:** *– record/playback head –*

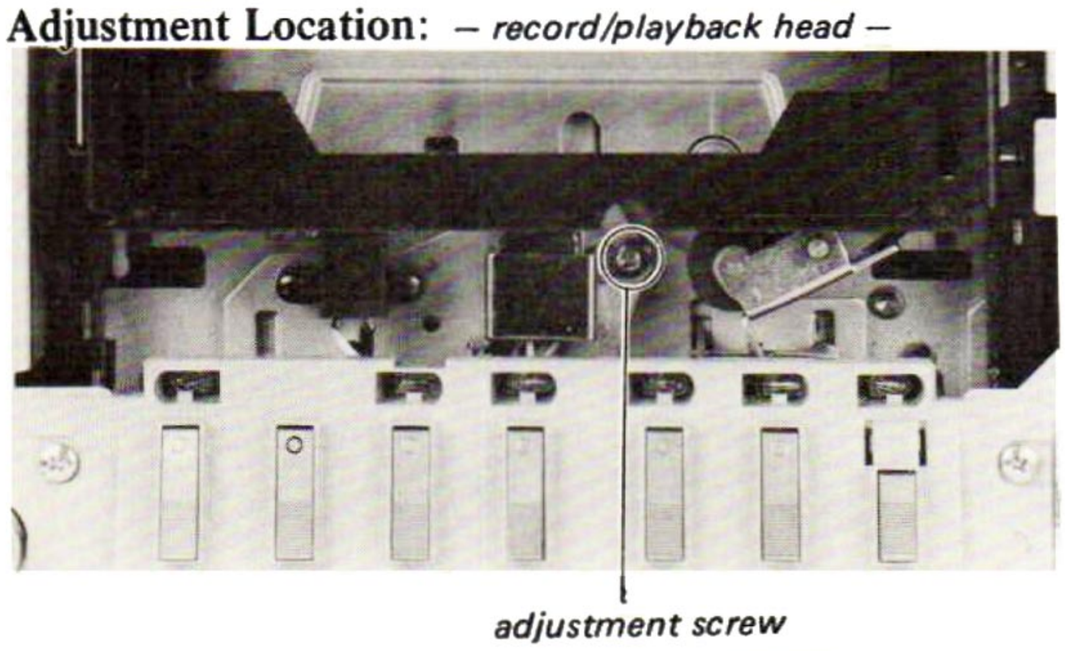


## Playback Level Adjustment

**Setting:**

TAPE SELECT switch: TYPE I

**Procedure:**

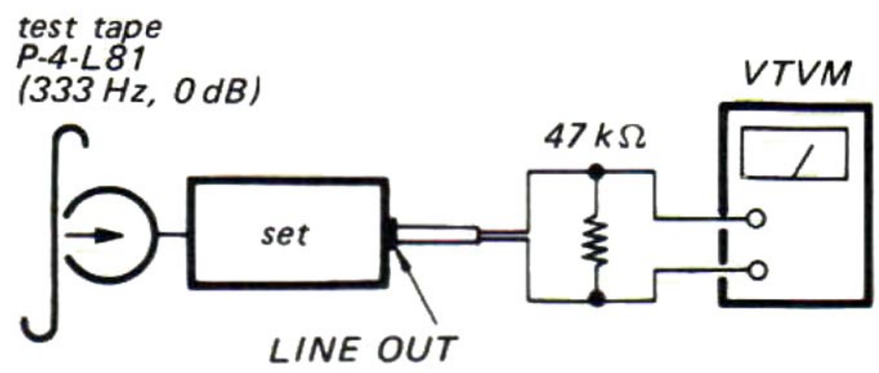


Adjust RV104 (L-CH) and RV204 (R-CH) to obtain the specified LINE OUT level.

**Specification:**

LINE OUT level: 0.52 – 0.58V
(−3.5 to −2.5dB)
Level difference between channels:
less than 1dB

Check that the LINE OUT level does not change in playback mode while changing the mode from playback to stop several times.

**Adjustment Location:**

*– audio amp board –*

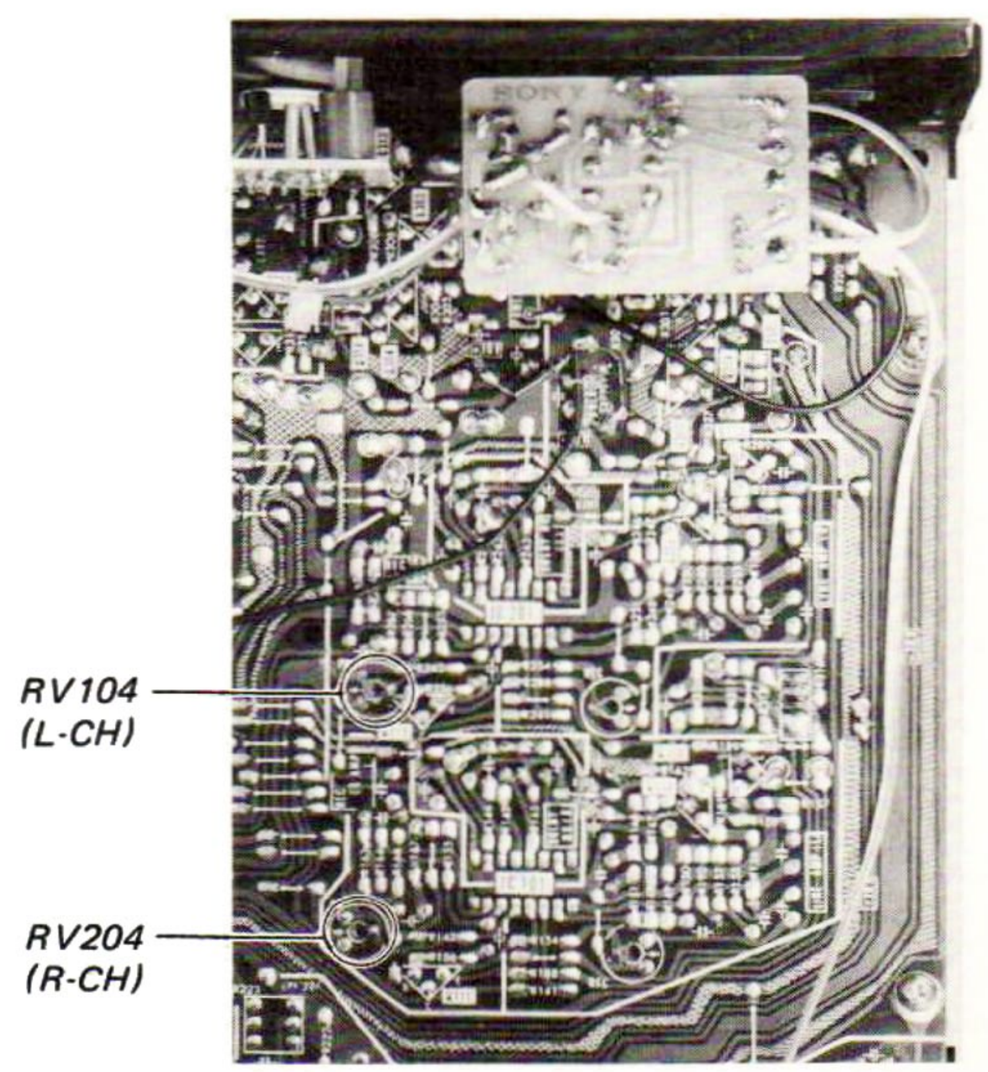




www.hifiengine.com

## Record Level Adjustment

**Setting:**

| | |
|---|---|
| TAPE SELECT switch: | TYPE I |
| DOLBY NR switch: | OFF |
| REC MASTER control: | standard record (See page 40.) |

**Procedure:**

1. Mode: record

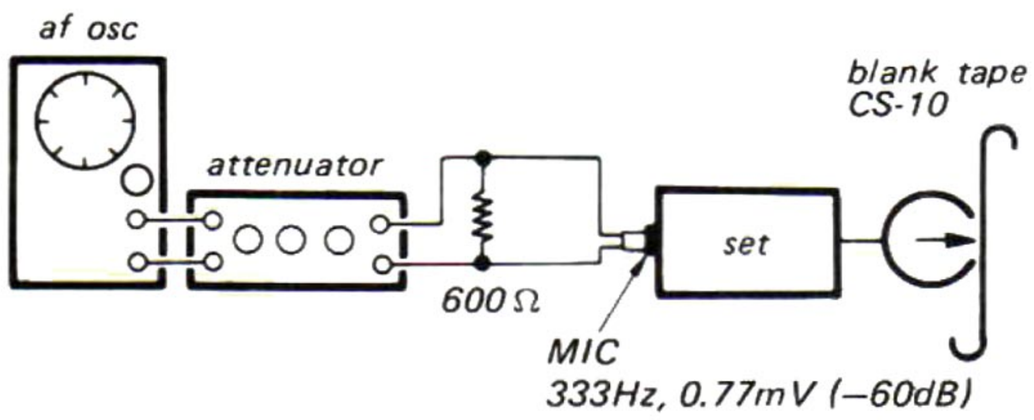


2. Mode: playback

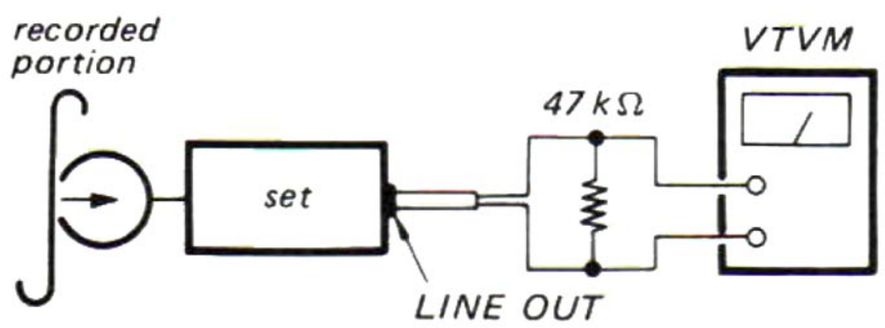


Adjust RV105 (L-CH) and RV205 (R-CH) to obtain 0.44V (–5dB) LINE OUT level.

**Specification:**

| | |
|---|---|
| LINE OUT level: | 0.39 – 0.49V (–6 to –4dB) |

**Adjustment Location:** *– audio amp board –*

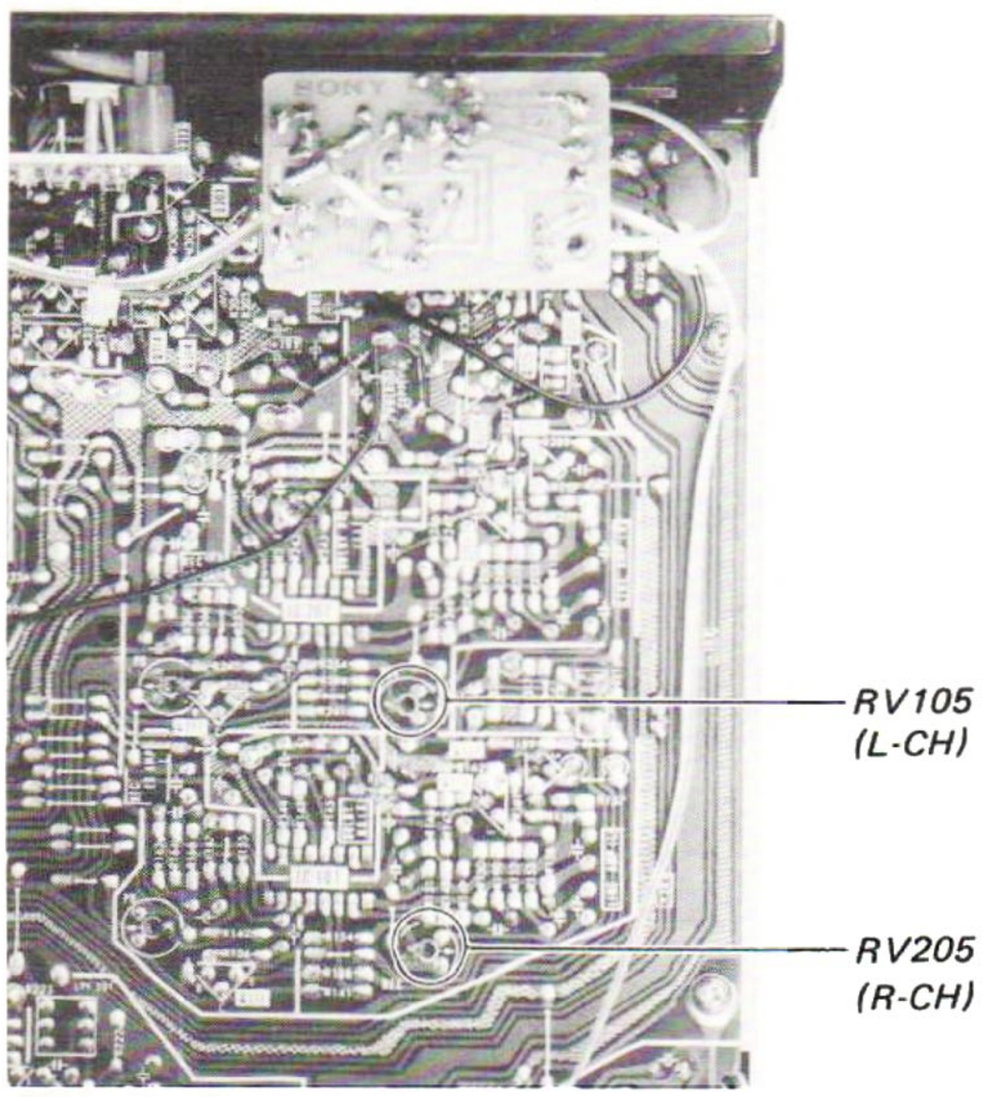


## Record Bias Adjustment

**Setting:**

| | |
|---|---|
| REC MASTER control: | standard record (See page 40.) |

**Procedure:**

1. Mode: record

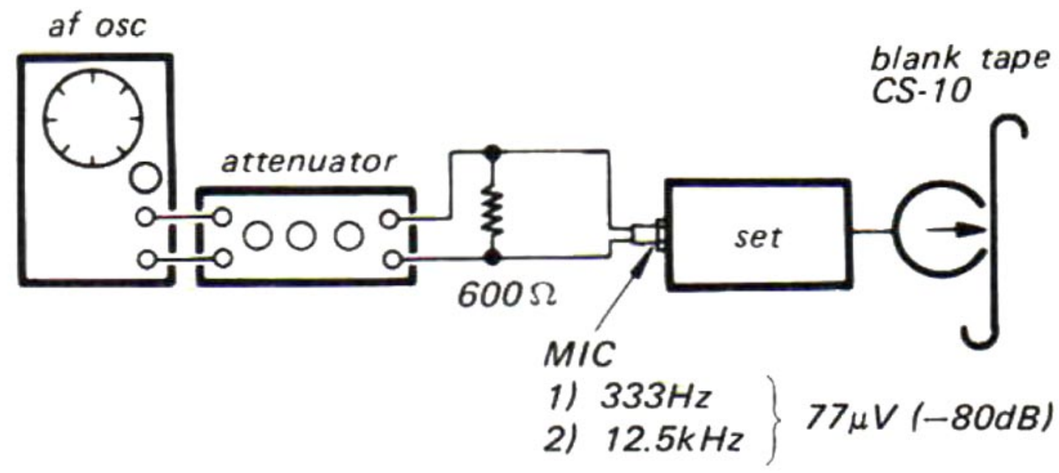


2. Mode: playback

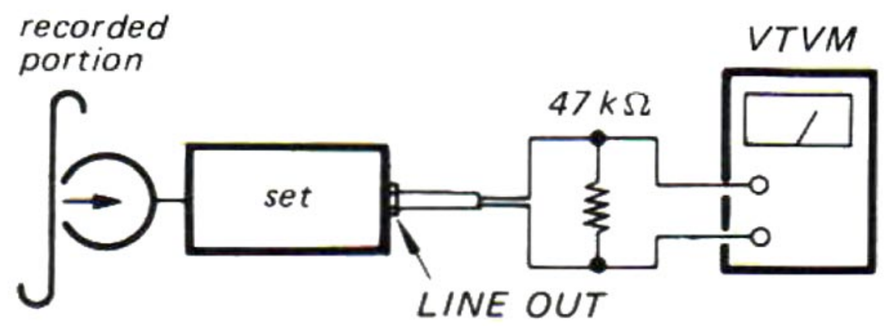


Play back both frequencies, adjust C311 (L-CH) and C312 (R-CH) for the same VTVM reading.

**Adjustment Location:**

*– audio amp board –*

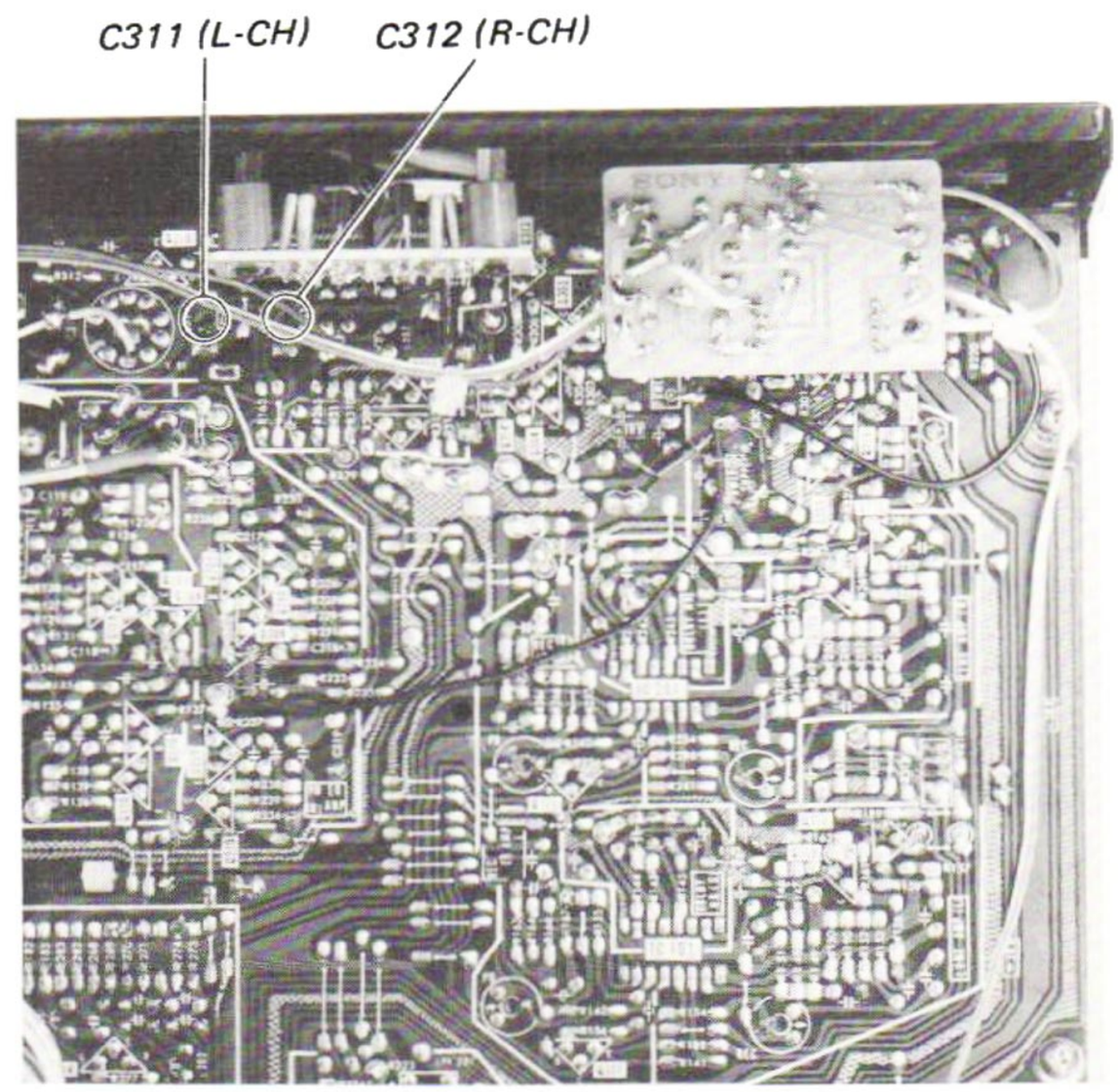




www.hifiengine.com

## Capstan Motor Adjustment

**Setting:**

POWER switch: ON
Mode: stop

**Procedure:**

1. Remove CN602.
2. Apply 1.5V dc and connect an oscilloscope as follows.

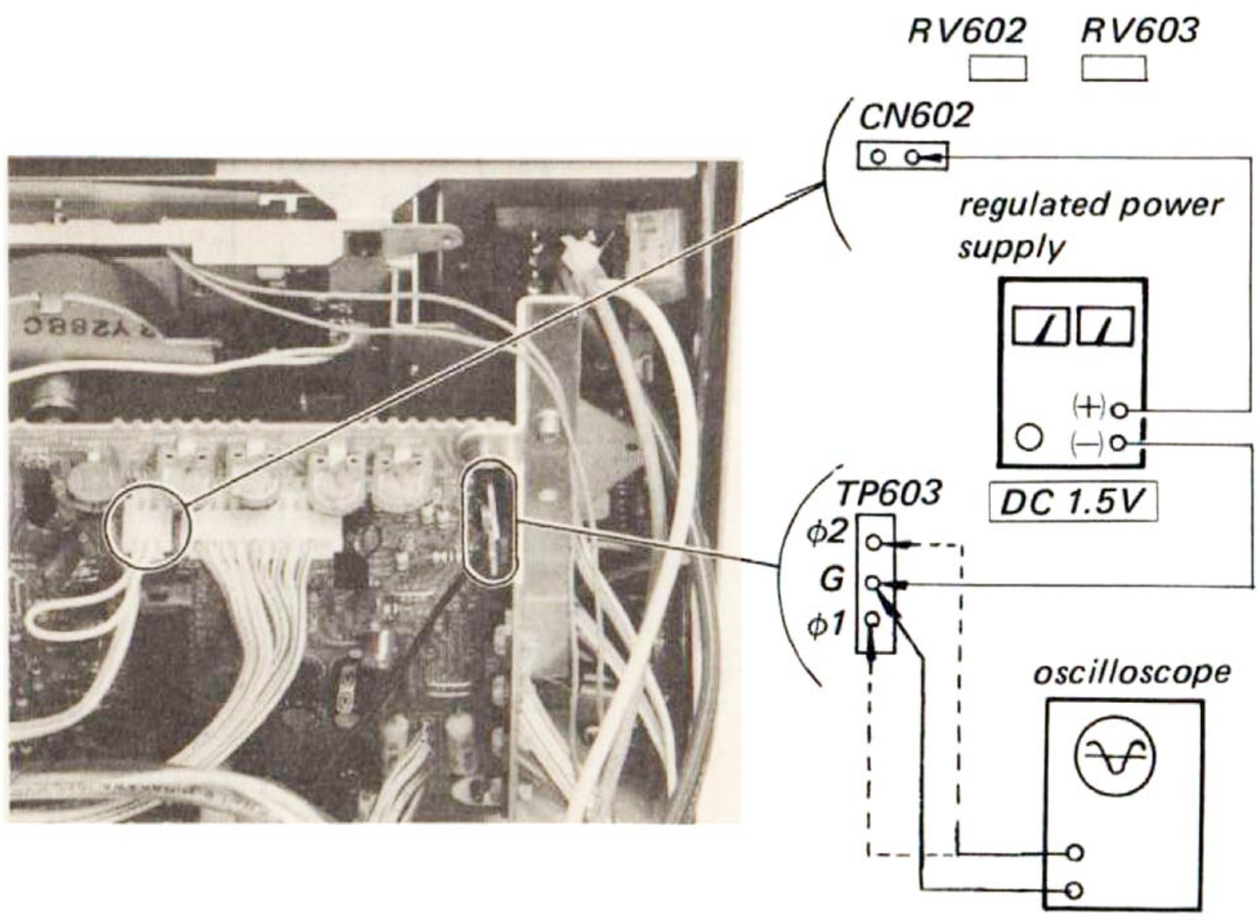


3. Adjust adjustable resistors.

| Oscilloscope connection | Adjust | Waveform |
|---|---|---|
| TP603 (G) and TP603 (φ1) | RV604 | A = B |
| | RV602 | 4Vp-p |
| TP603 (G) and TP603 (φ2) | RV605 | A = B |
| | RV603 | 4Vp-p |

*Waveforms:*

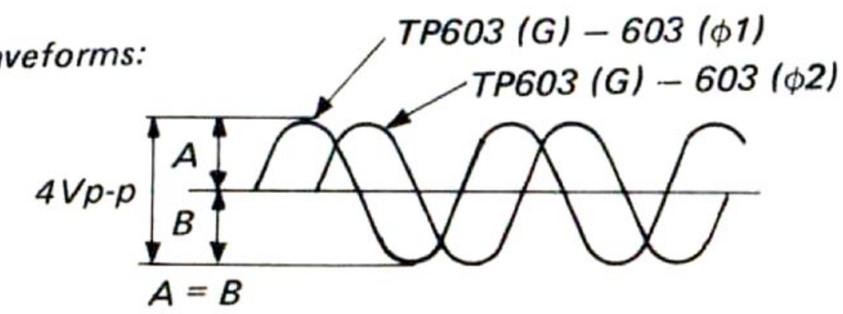


4. Reconnect CN602, install a tape cassette and set in playback mode.

5. Adjust RV604 and RV605 to obtain a symmetrical waveforms as shown.

*Waveforms:*

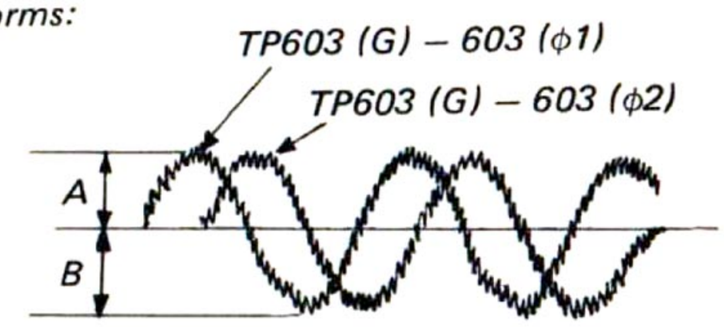


**Adjustment Location:**

*– servo amp board –*

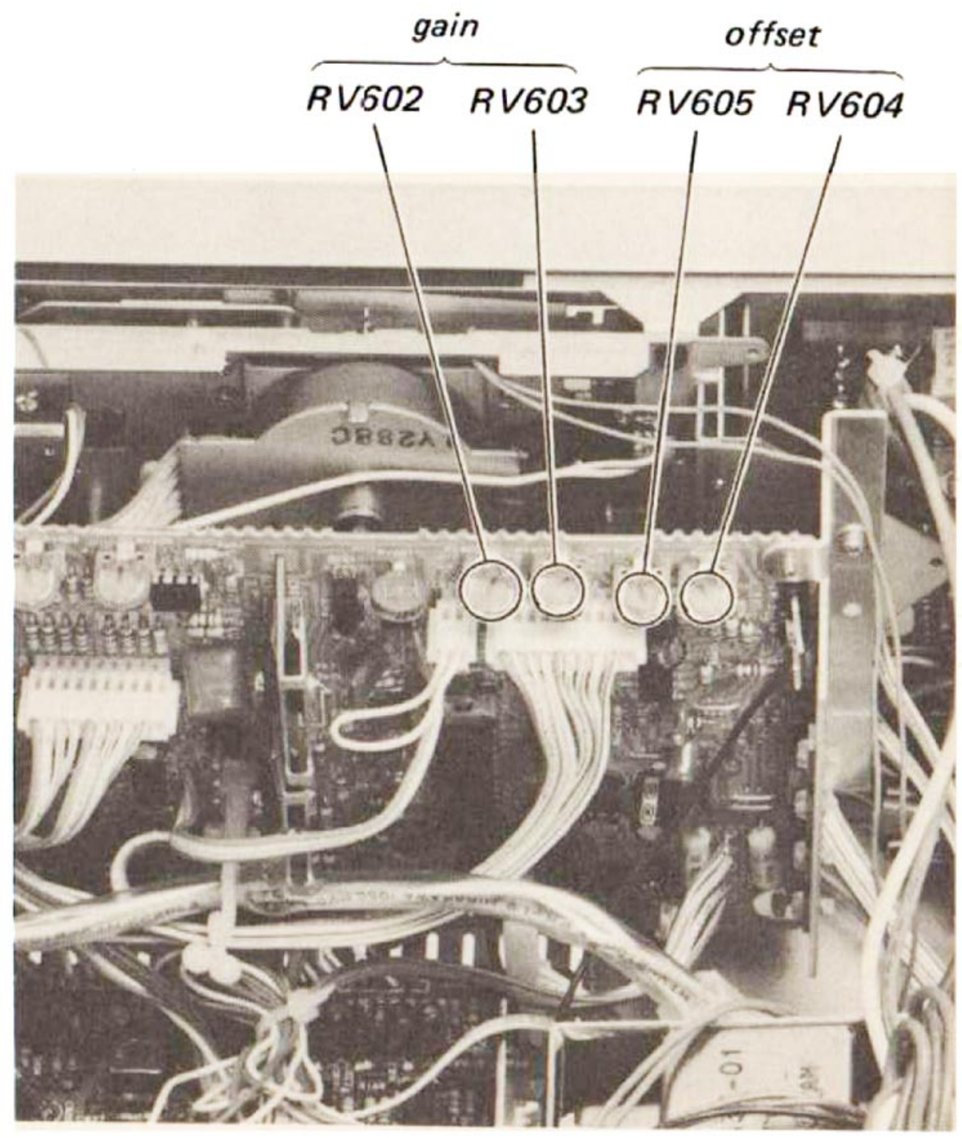




www.hifiengine.com

## Reel Motor Adjustment

**Procedure:**

1. Connect an oscilloscope as follows.

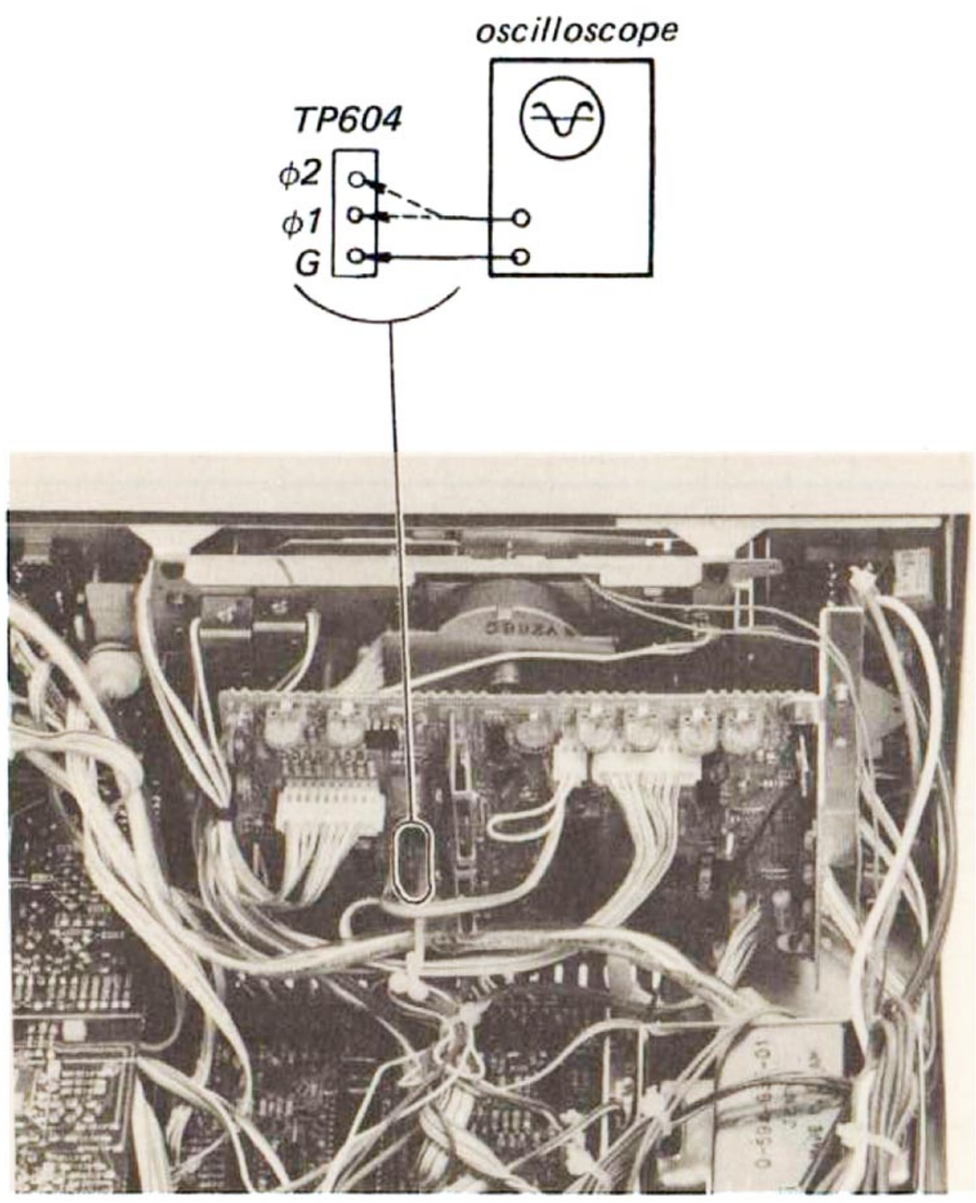


2. Set the tapecorder in playback mode without a tape cassette.
3. Adjust RV608 and RV609.

| Oscilloscope connection | Adjust | Obtain |
|---|---|---|
| TP604 (G) and TP604 (φ1) | RV608 | Waveform A = B |
| TP604 (G) and TP604 (φ2) | RV609 | |

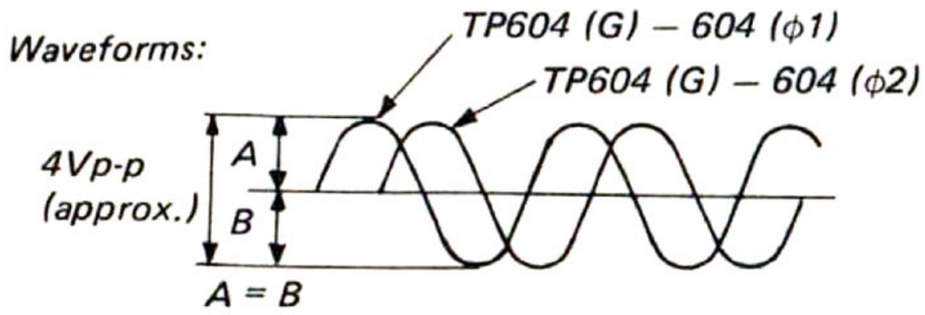


4. Adjust RV607 to make the above two waveforms the same level, approximately 4Vp-p.
5. Install a torque meter CQ-101A in the set. Adjust RV606 to obtain 40 – 45g·cm (0.56 – 0.62oz·inch) of forward torque.
6. Install a blank tape in the set and readjust step 2 in playback mode.

**Adjustment Location:**

*– servo amp board –*

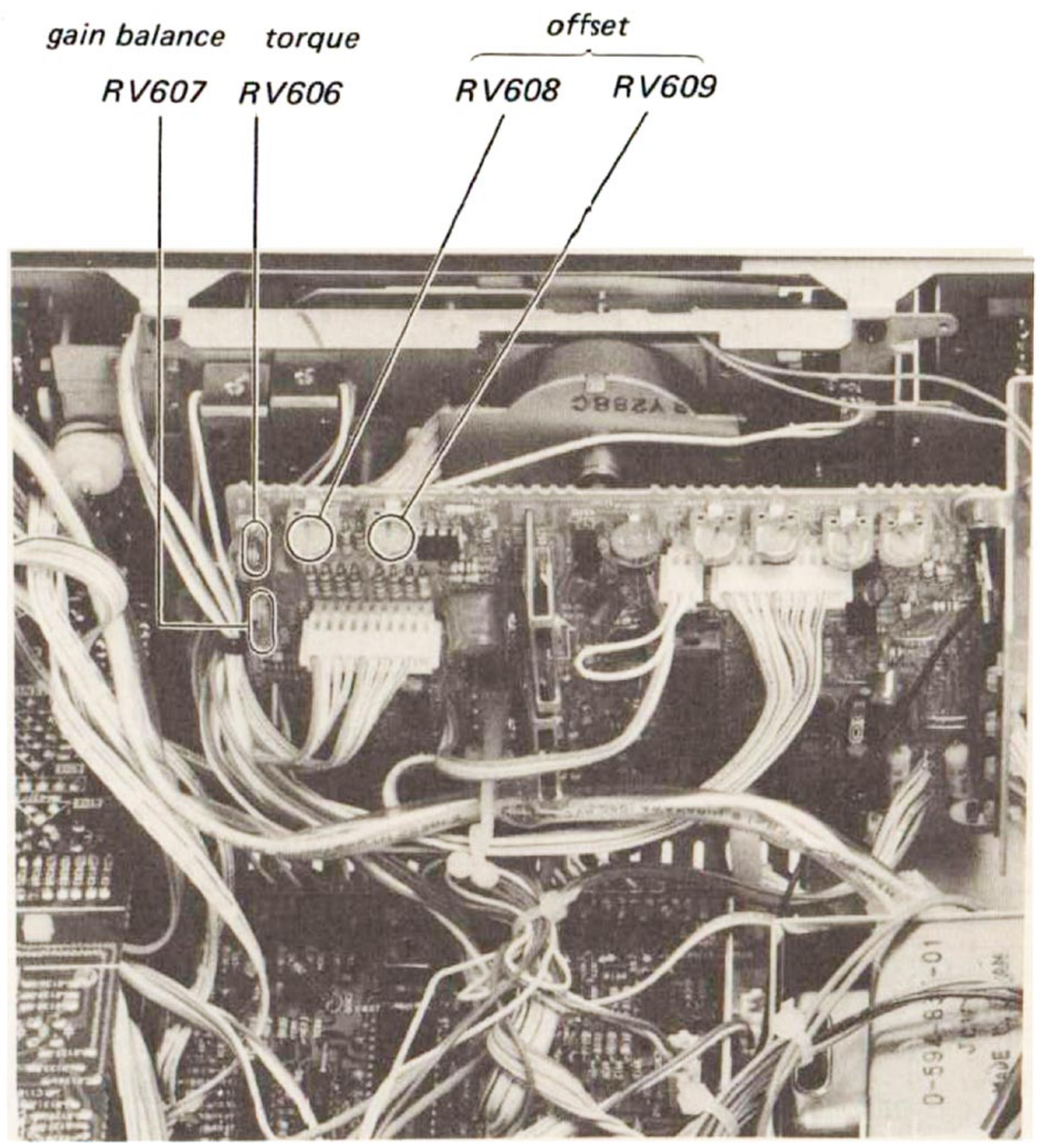

## LCD Meter Adjustment

### Setting:

PEAK HOLD switch: MANUAL
REC MASTER control:
to obtain 0.44V (−5dB) output at LINE OUT with 0.25V (−10dB) input at LINE IN

### Procedure:

**Note:** When adjusting the following adjustable resistors, turn them in the direction to decrease the indications and set the resistors just when an indication element disappears.

1. Mode: record

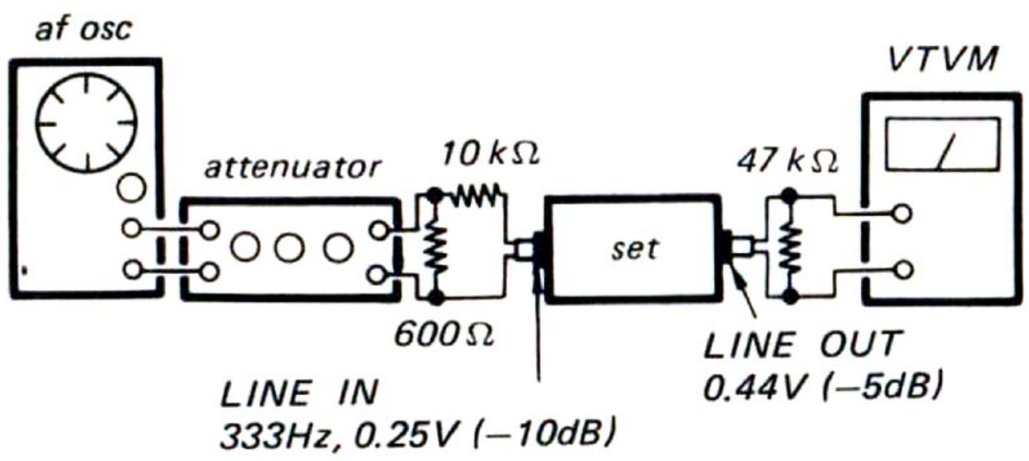


Adjust RV501 (L-CH) and RV401 (R-CH) to make the right-most indication element place on 0VU (−4dB).

2. Mode: record

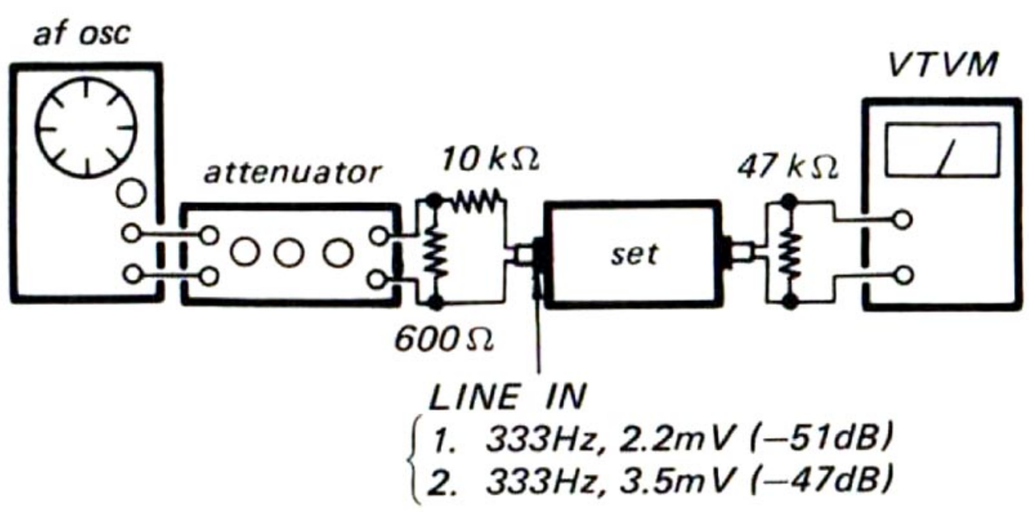


With 2.2mV (−51dB) input, adjust RV001 to make the left-most indication element light up. With 3.5mV (−47dB) input, readjust RV001 to make the first two indication eléments light up.

3. Repeat steps 1 and 2.

### Adjustment Location:

*– LCD unit –*

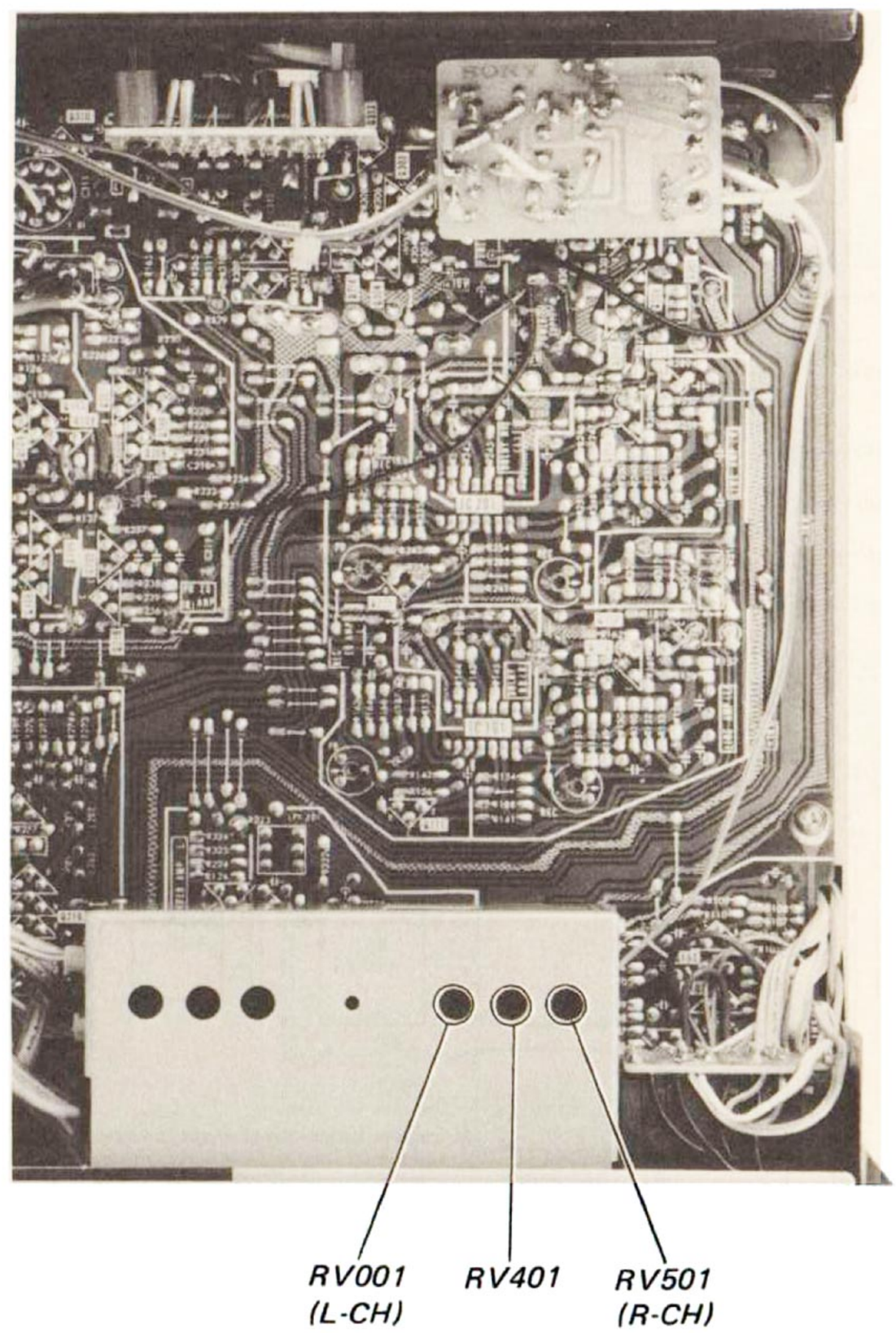




www.hifiengine.com

## Note (System Control and Servo Amp Sections)

- All capacitors are in μF unless otherwise noted. pF : μμF 50WV or less are not indicated except for electrolytics.
- All resistors are in ohms, ¼W unless otherwise noted. kΩ : 1000Ω, MΩ : 1000kΩ
- : nonflammable resistor.
- : fusible resistor.
- △ : internal component.
- : B+ bus.
- : B− bus.
- : panel designation.
- : adjustment for repair.
- Readings are taken under no-signal conditions with a VOM (20kΩ/V).
  - ◀◀ : rewind
  - ▶ : playback
  - ▶▶ : fast forward
  - ● : record
  - ■■ : pause
  - ◉ : REC MUTE
  - ■ : stop

  no mark: stop
- Waveforms are taken in playback mode.

- Switch

| Ref. No. | Switch | Position |
|---|---|---|
| S401 | CLEAR | OFF |
| S402 | PROGRAM | OFF |
| S501 | POWER | OFF |
| S801 | REW | OFF |
| S802 | STOP | OFF |
| S803 | FWD | OFF |
| S804 | FF | OFF |
| S805 | REC | OFF |
| S806 | PAUSE | OFF |
| S807 | REC MUTE | OFF |
| S808 | CASSETTE | OFF |
| S809 | MISERASURE PREVENTION | OFF |
| S810-1, 2 | TIMER | OFF |
| S811 | TAPE COUNTER | OFF |
| S812 | MEMORY | OFF |

IC801 μPD547-027

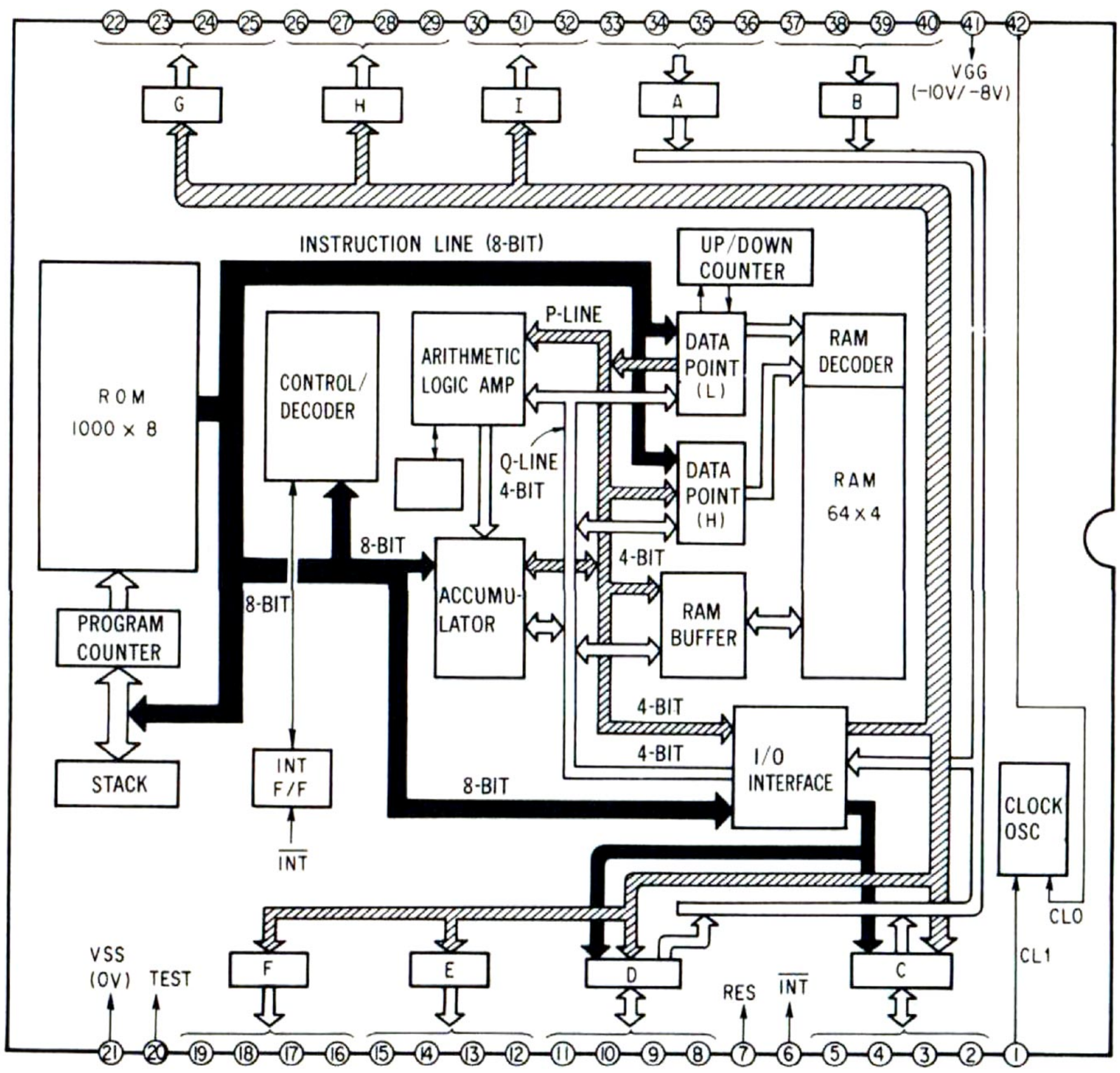




www.hifiengine.com

# SECTION 5
# EXPLODED VIEWS

- Items with no part number and/or no description are not stocked because they are seldom required for routine service.
- All screws are Phillips (cross recess) type unless otherwise noted.
  (–) = slotted head
- Circled letters ( Ⓐ to Ⓩ ) are applicable to European models only.

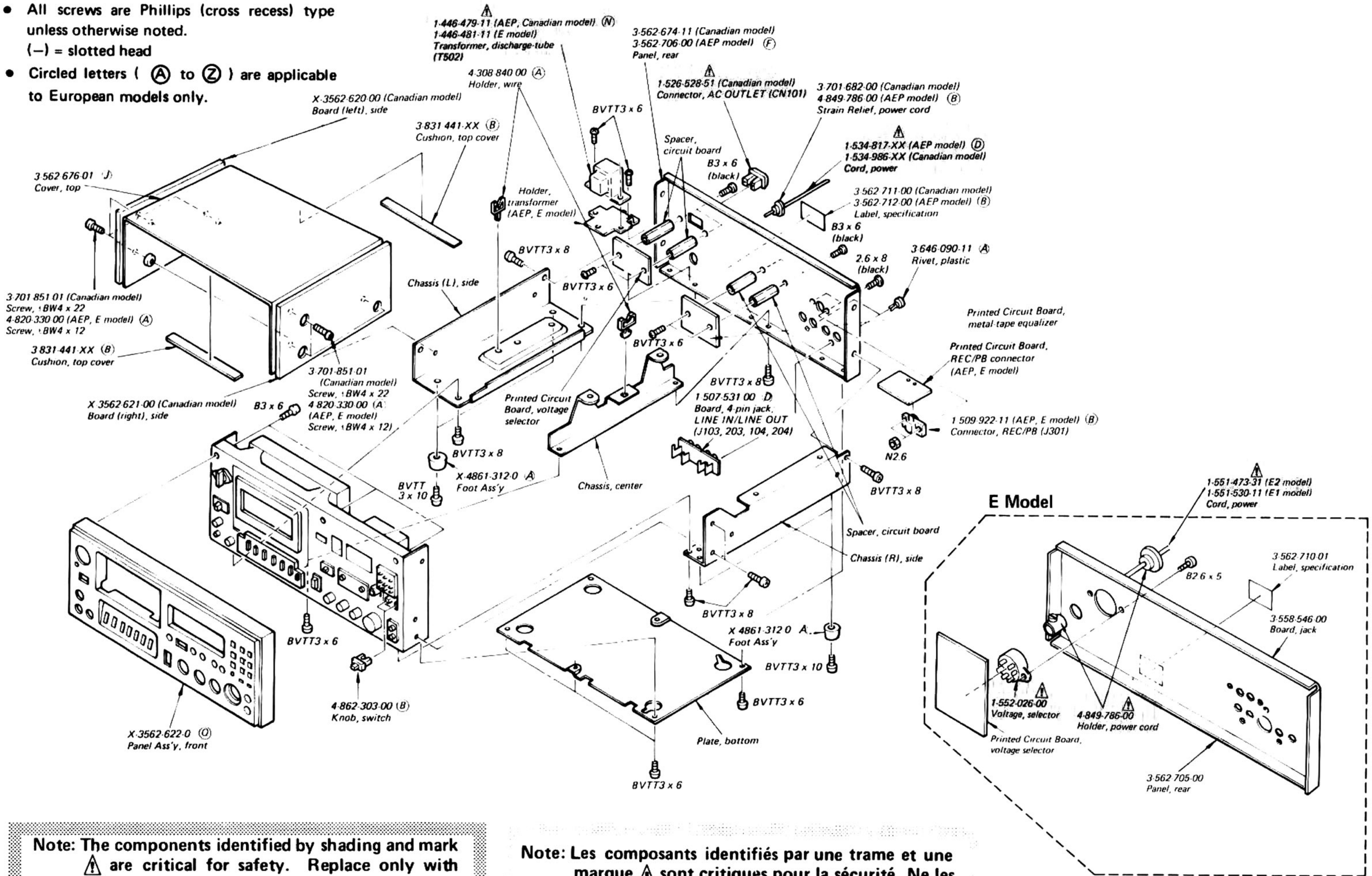


**Note: The components identified by shading and mark ⚠ are critical for safety. Replace only with part number specified.**

**Note: Les composants identifiés par une trame et une marque ⚠ sont critiques pour la sécurité. Ne les remplacer que par une pièce portant le numéro spécifié.**



www.hifiengine.com

- Items with no part number and/or no description are not stocked because they are seldom required for routine service.
- All screws are Phillips (cross recess) type unless otherwise noted.
  (–) = slotted head
- Circled letters ( Ⓐ to Ⓩ ) are applicable to European models only.

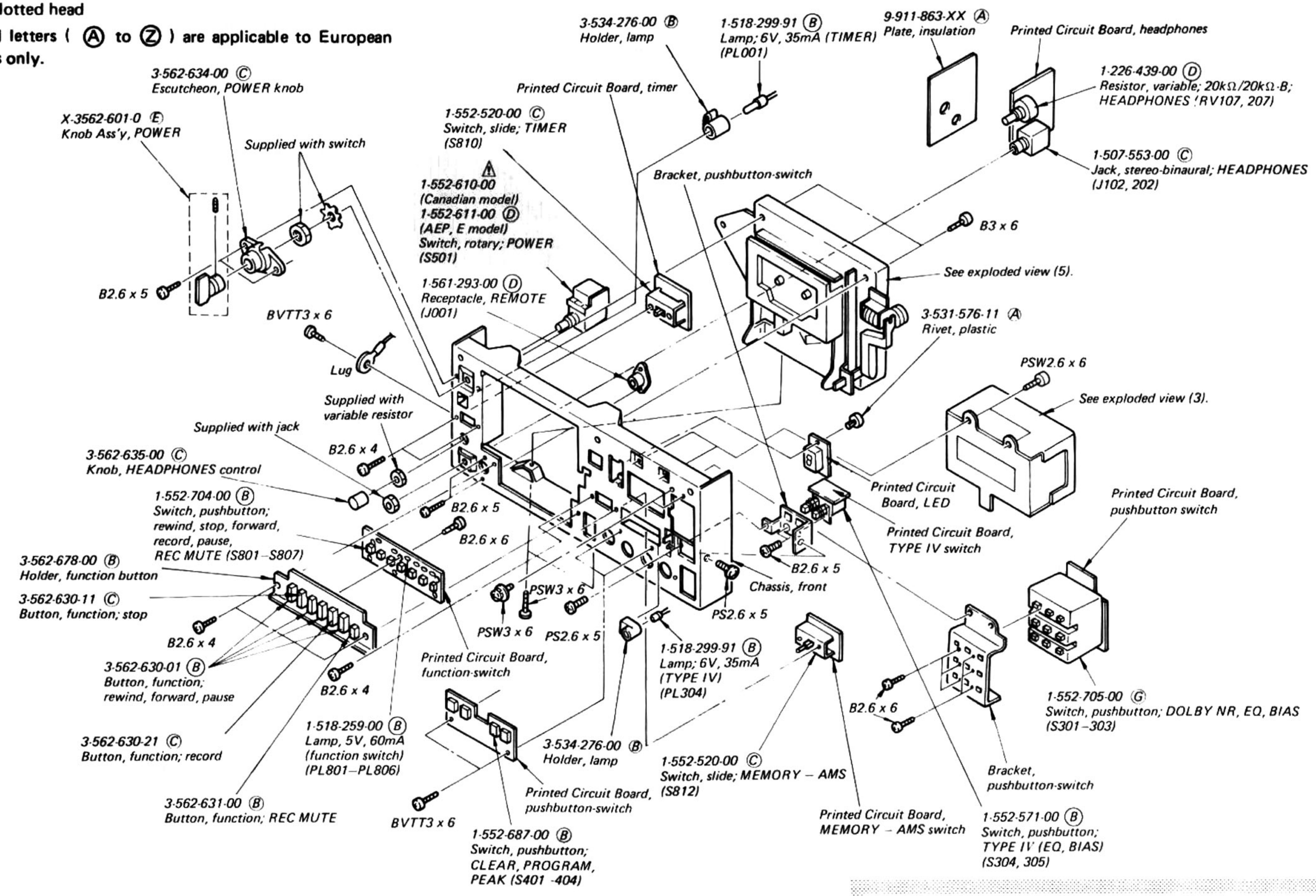


**Note: The components identified by shading and mark ⚠ are critical for safety. Replace only with part number specified.**

**Note: Les composants identifiés par une trame et une marque ⚠ sont critiques pour la sécurité. Ne les remplacer que par une pièce portant le numéro spécifié.**



www.hifiengine.com

- Items with no part number and/or no description are not stocked because they are seldom required for routine service.
- All screws are Phillips (cross recess) type unless otherwise noted.
  (–) = slotted head
- Circled letters ( Ⓐ to Ⓩ ) are applicable to European models only.

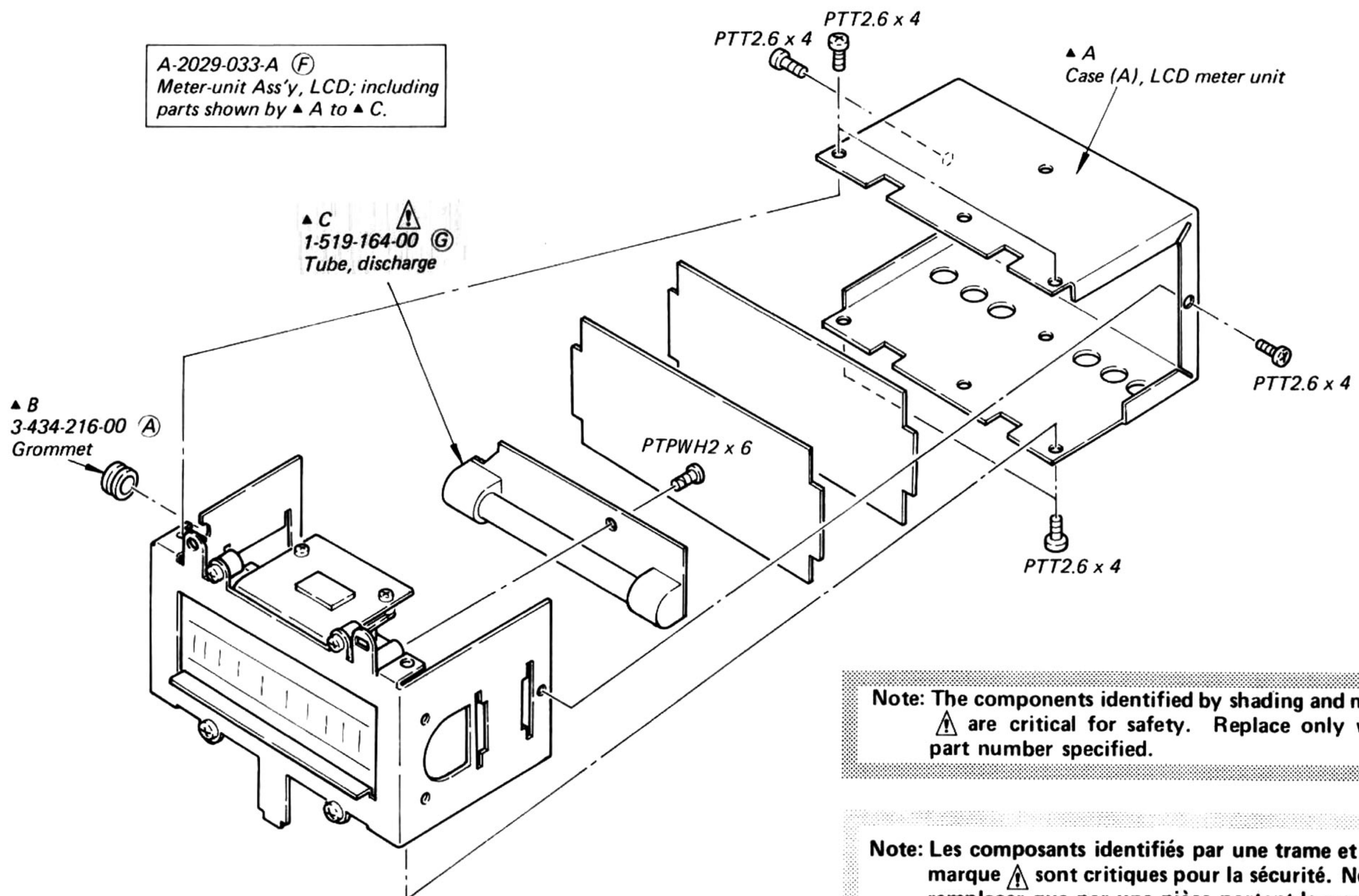


**Note: The components identified by shading and mark ⚠ are critical for safety. Replace only with part number specified.**

**Note: Les composants identifiés par une trame et une marque ⚠ sont critiques pour la sécurité. Ne les remplacer que par une pièce portant le numéro spécifié.**



www.hifiengine.com

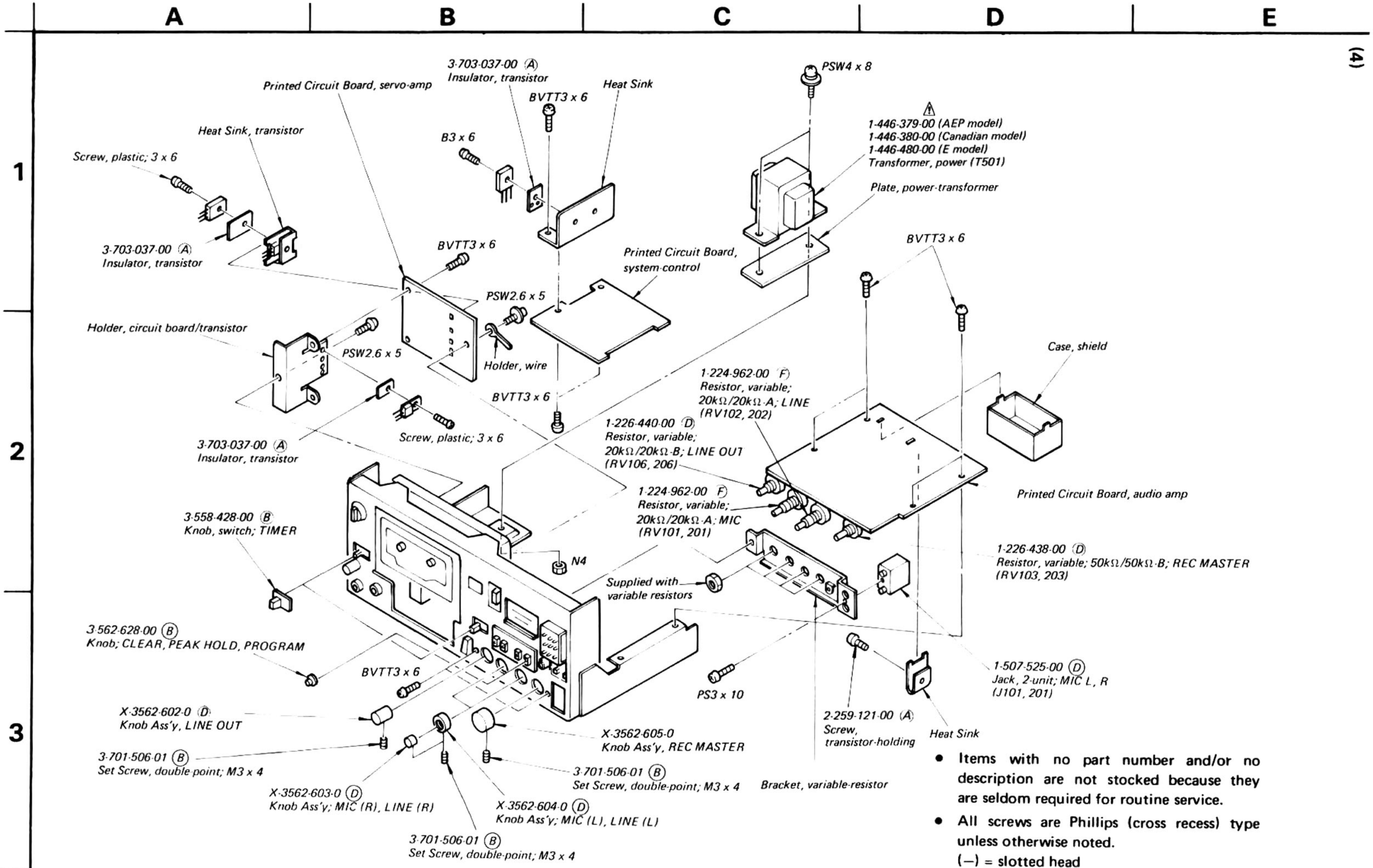


- Items with no part number and/or no description are not stocked because they are seldom required for routine service.
- All screws are Phillips (cross recess) type unless otherwise noted.
  (–) = slotted head
- Circled letters ( Ⓐ to Ⓩ ) are applicable to European models only.

**Note: The components identified by shading and mark ⚠ are critical for safety. Replace only with part number specified.**

**Note: Les composants identifiés par une trame et une marque ⚠ sont critiques pour la sécurité. Ne les remplacer que par une pièce portant le numéro spécifié.**



www.hifiengine.com

- Items with no part number and/or no description are not stocked because they are seldom required for routine service.
- All screws are Phillips (cross recess) type unless otherwise noted.
  (–) = slotted head
- (□□T) shows the number of coils in spring.
- Circled letters ( Ⓐ to Ⓩ ) are applicable to European models only.

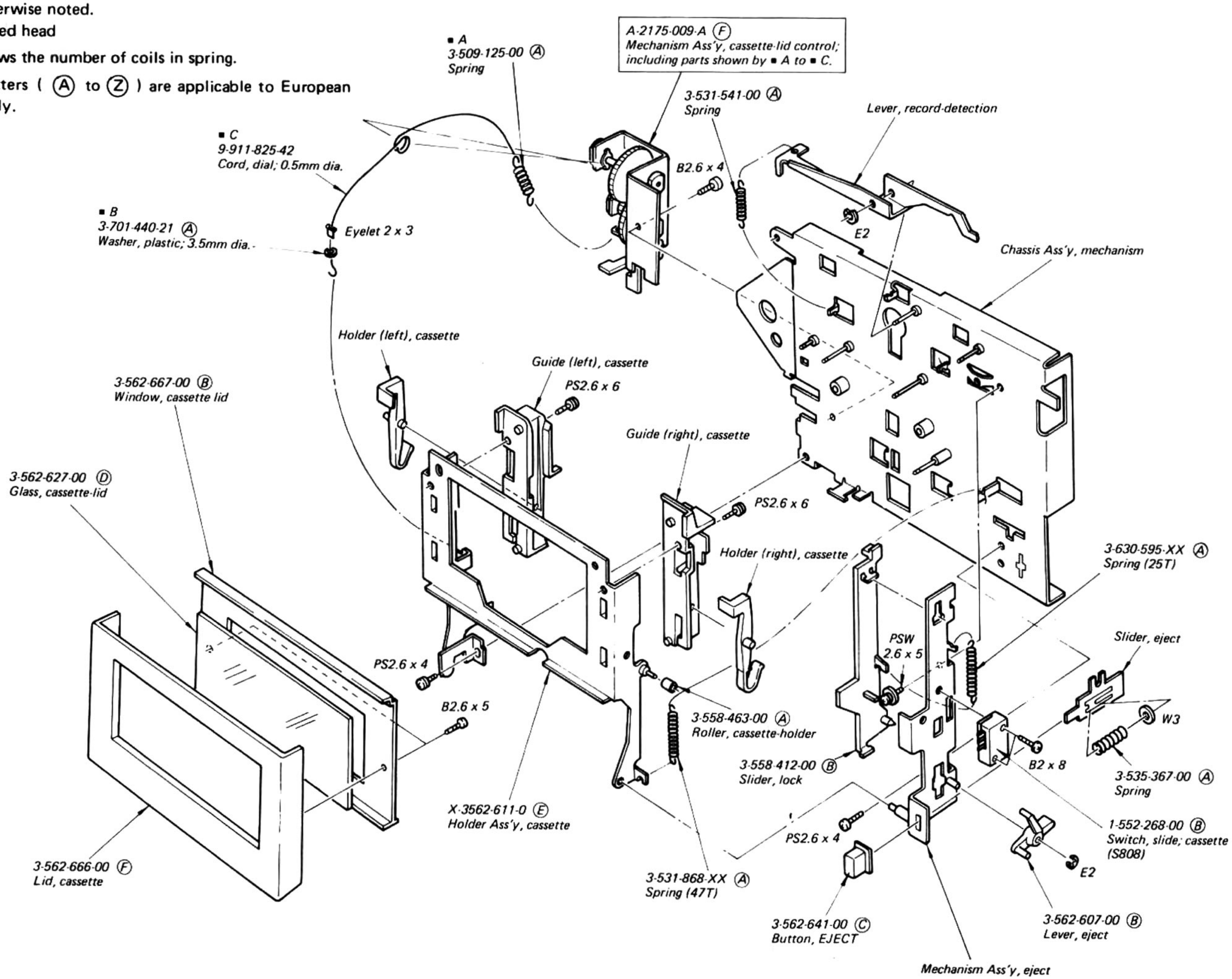




www.hifiengine.com

- Items with no part number and/or no description are not stocked because they are seldom required for routine service.
- All screws are Phillips (cross recess) type unless otherwise noted.
  (−) = slotted head
- (□□T) shows the number of coils in spring.
- Circled letters ( Ⓐ to Ⓩ ) are applicable to European models only.

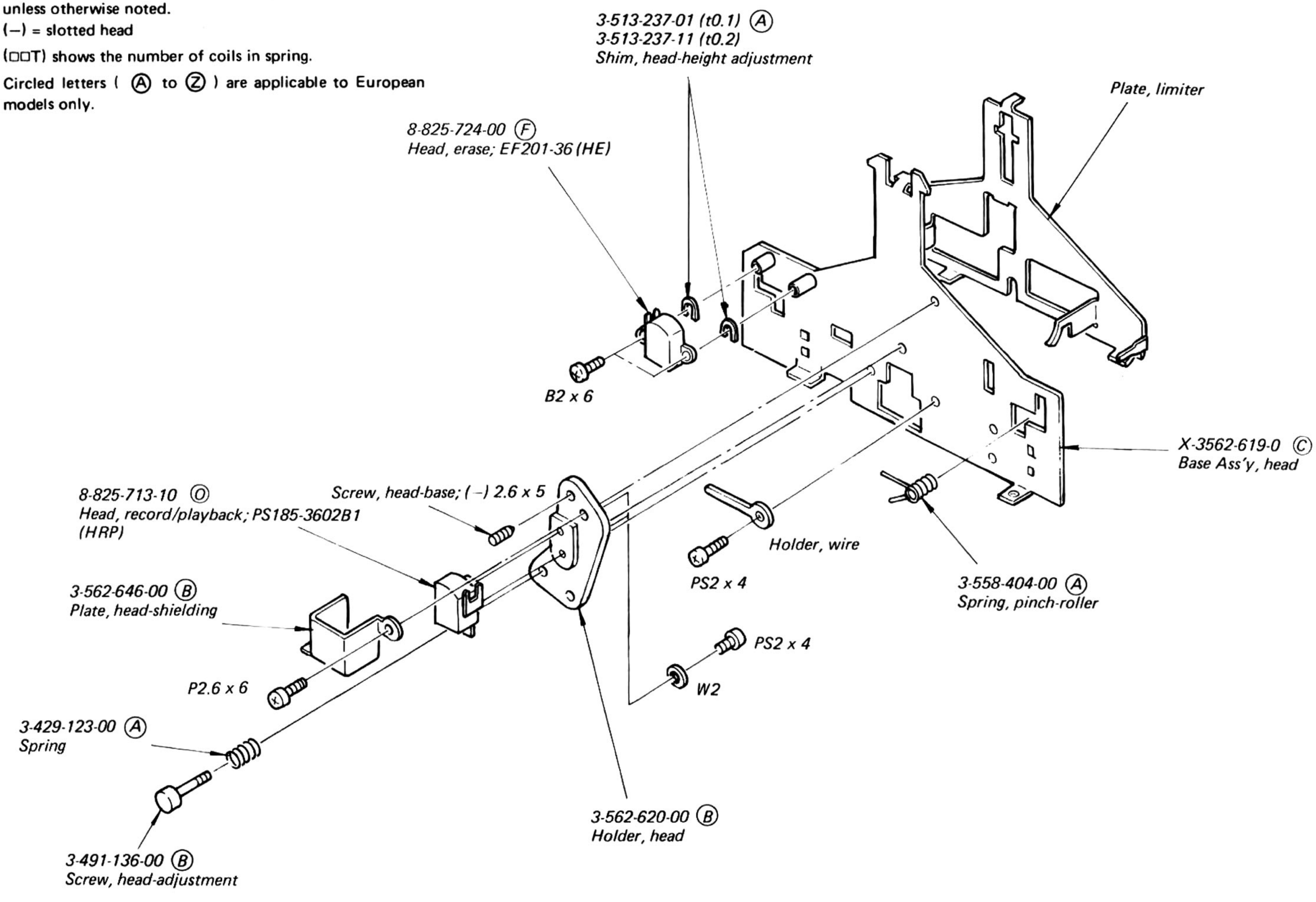




www.hifiengine.com

- Items with no part number and/or no description are not stocked because they are seldom required for routine service.
- All screws are Phillips (cross recess) type unless otherwise noted.
  (–) = slotted head
- Circled letters ( Ⓐ to Ⓩ ) are applicable to European models only.

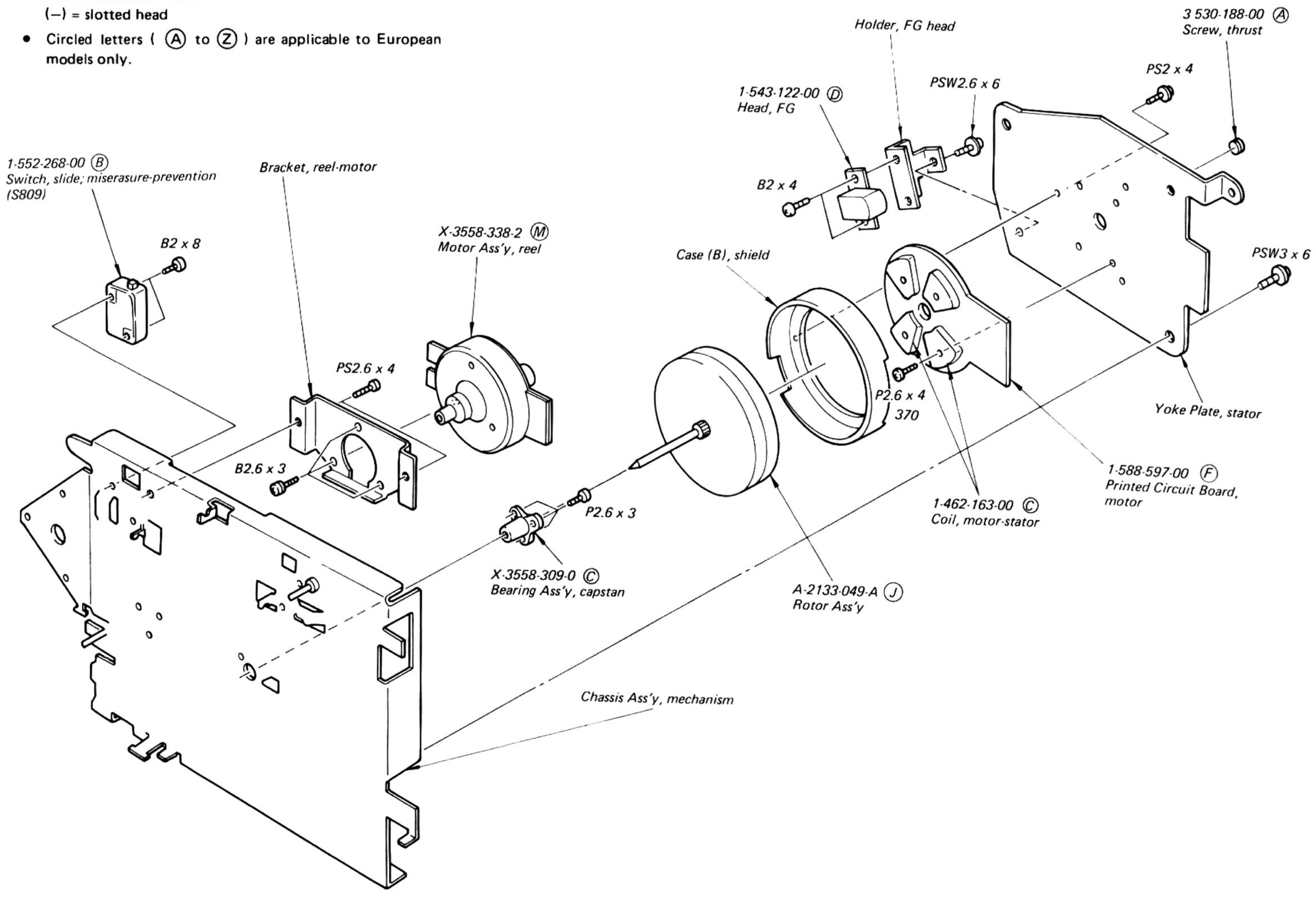




www.hifiengine.com

- Items with no part number and/or no description are not stocked because they are seldom required for routine service.
- All screws are Phillips (cross recess) type unless otherwise noted.
  (–) = slotted head
- (□□T) shows the number of coils in spring.
- Circled letters ( Ⓐ to Ⓩ ) are applicable to European models only.

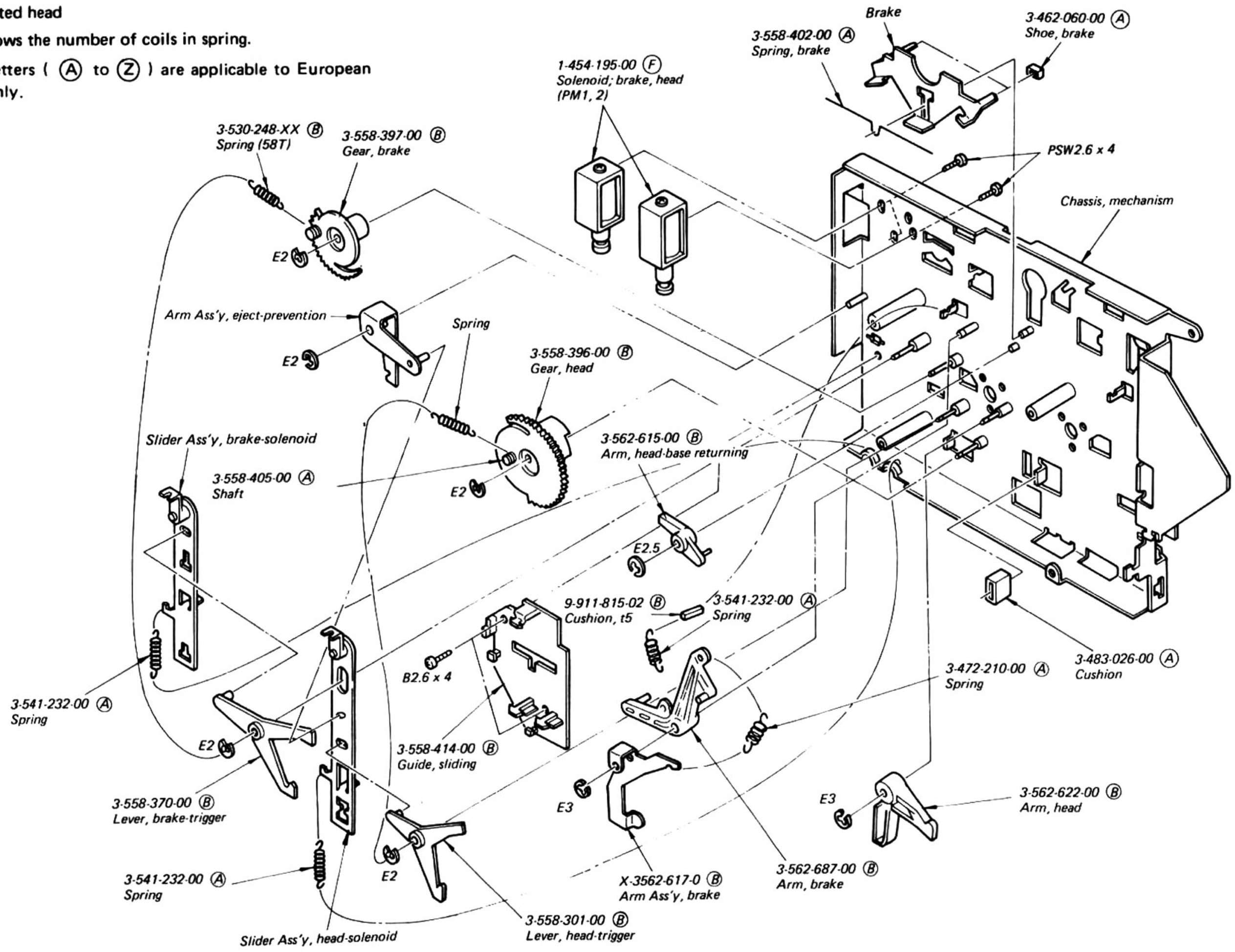




www.hifiengine.com

- Items with no part number and/or no description are not stocked because they are seldom required for routine service.
- All screws are Phillips (cross recess) type unless otherwise noted.
  (–) = slotted head
- Circled letters ( Ⓐ to Ⓩ ) are applicable to European models only.

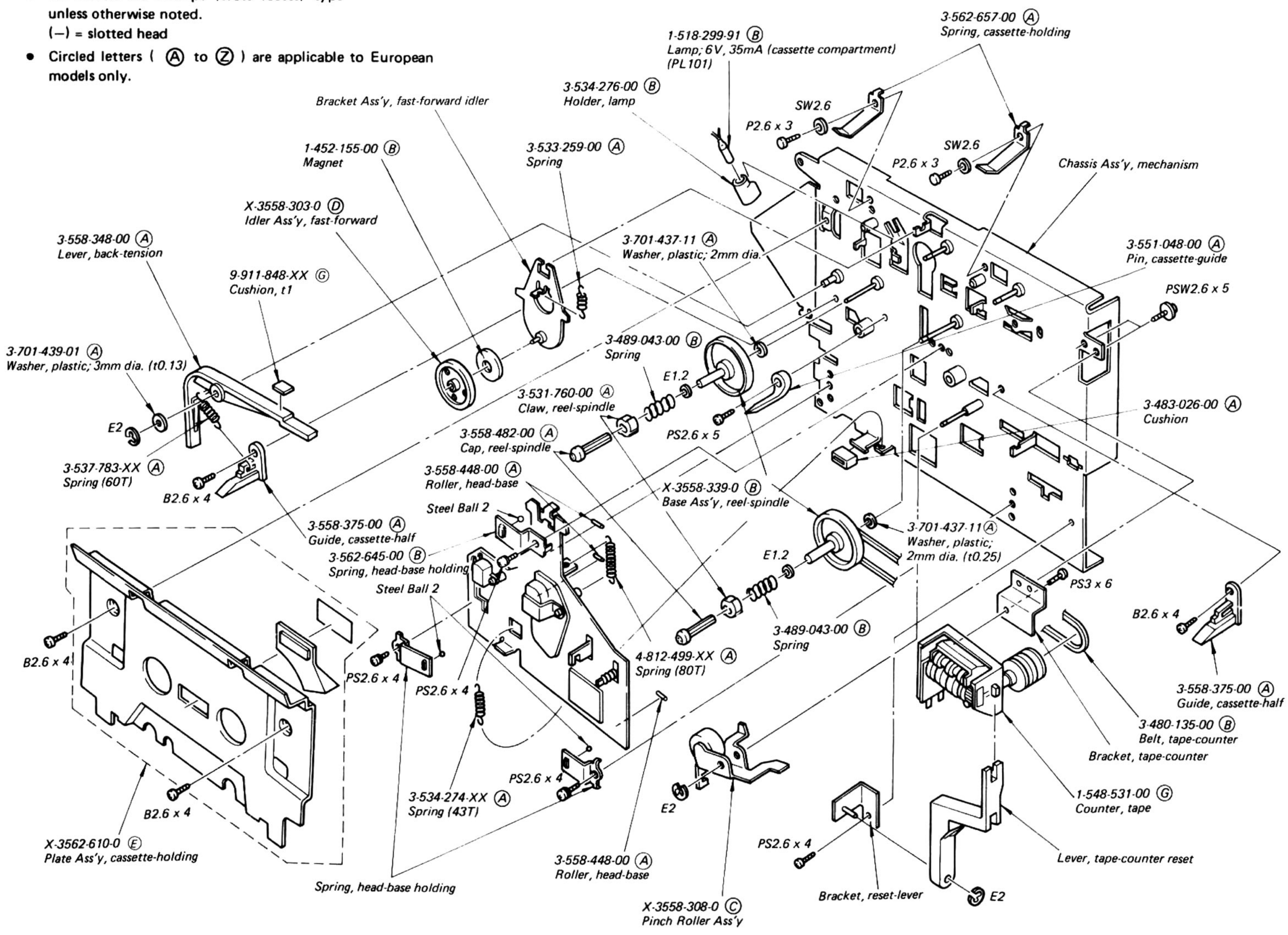




www.hifiengine.com

# SECTION 6
# ELECTRICAL PARTS LIST

- Circled letters ( Ⓐ to Ⓩ ) are applicable to European models only.

| Ref. No. | Part No. | Description |
|---|---|---|
| | | **SEMICONDUCTORS** |
| | | **Transistors** |
| Q001, 002 | 8-729-663-47 | Ⓑ 2SC1364 |
| ⇒ Q101, 201 | 8-729-612-77 | Ⓑ 2SA1027R |
| ⇒ Q102, 202 | 8-729-665-47 | Ⓑ 2SC1362 |
| ⇒ Q103, 203 | 8-729-665-47 | Ⓑ 2SC1362 |
| ⇒ Q104, 204 | 8-729-612-77 | Ⓑ 2SA1027R |
| Q105, 205 | 8-729-663-47 | Ⓑ 2SC1364 |
| ⇒ Q106, 206 | 8-729-612-77 | Ⓑ 2SA1027R |
| ⇒ Q107, 207 | 8-729-665-47 | Ⓑ 2SC1362 |
| ⇒ Q108, 208 | 8-729-612-77 | Ⓑ 2SA1027R |
| Q109, 209 | 8-729-663-47 | Ⓑ 2SC1364 |
| Q110, 210 | 8-729-663-47 | Ⓑ 2SC1364 |
| Q111, 211 | 8-729-195-23 | Ⓑ 2SA952 |
| ⇒ Q112, 212 | 8-760-335-10 | Ⓑ 2SC1474 |
| ⇒ Q113, 213 | 8-729-663-47 | Ⓑ 2SC1364 |
| Q114–117, Q214–217 | 8-729-663-47 | Ⓑ 2SC1364 |
| Q301 | 8-729-141-43 | Ⓑ 2SD414 |
| ⇒ Q302 | 8-720-950-03 | Ⓒ 2SC926A |
| ⇒ Q303 | 8-729-612-77 | Ⓑ 2SA1027R |
| ⇒ Q304 | 8-729-203-04 | Ⓑ 2SK30A |
| Q305 | 8-729-154-83 | Ⓒ 2SB548 |
| ⇒ Q306 | 8-729-612-77 | Ⓑ 2SA1027R |
| ⇒ Q307 | 8-720-950-03 | Ⓓ 2SC926A |
| ⇒ Q308 | 8-729-612-77 | Ⓑ 2SA1027R |
| ⇒ Q309 | 8-729-203-04 | Ⓑ 2SK30A |
| ⇒ Q310 | 8-760-413-10 | Ⓑ 2SC1475 |
| ⇒ Q311 | 8-760-335-10 | Ⓑ 2SC1474 |
| ⇒ Q312 | 8-729-612-77 | Ⓑ 2SA1027R |
| Q313 | 8-729-663-47 | Ⓑ 2SC1364 |
| Q314 | 8-720-950-03 | 2SC926A (Canadian model) |
| Q314 | 8-729-663-47 | Ⓑ 2SC1364 (AEP, E model) |
| Q401, 501 | 8-729-663-47 | Ⓑ 2SC1364 |
| ⇒ Q601, 602 | 8-729-663-47 | Ⓑ 2SC1364 |
| ⇒ Q603, 604 | 8-729-612-77 | Ⓑ 2SA1027R |
| ⇒ Q605, 606 | 8-729-663-47 | Ⓑ 2SC1364 |
| ⇒ Q608, 609 | 8-729-663-47 | Ⓑ 2SC1364 |
| Q611 | 8-729-217-33 | Ⓒ 2SC1173 |
| Q612 | 8-729-247-33 | Ⓒ 2SA473 |
| Q613 | 8-729-217-33 | Ⓒ 2SC1173 |
| Q614 | 8-729-247-33 | Ⓒ 2SA473 |
| ⇒ Q615 | 8-729-663-47 | Ⓑ 2SC1364 |
| ⇒ Q616 | 8-729-612-77 | Ⓑ 2SA1027R |
| ⇒ Q617–621 | 8-729-663-47 | Ⓑ 2SC1364 |
| ⇒ Q622 | 8-729-612-77 | Ⓑ 2SA1027R |
| ⇒ Q623, 624 | 8-729-663-47 | Ⓑ 2SC1364 |
| Q625 | 8-729-141-43 | Ⓑ 2SD414 |
| Q626 | 8-729-154-83 | Ⓒ 2SB548 |
| Q627 | 8-729-141-43 | Ⓑ 2SD414 |
| Q628 | 8-729-154-83 | Ⓒ 2SB548 |
| ⇒ Q801 | 8-760-335-10 | Ⓑ 2SC1474 |
| ⇒ Q802 | 8-729-468-43 | Ⓒ 2SA684 |
| ⇒ Q803 | 8-760-335-10 | Ⓑ 2SC1474 |
| Q804 | 8-729-141-43 | Ⓑ 2SD414 |
| Q805 | 8-729-663-47 | Ⓑ 2SC1364 |
| Q806 | 8-729-154-83 | Ⓒ 2SB548 |
| ⇒ Q808, 809 | 8-729-612-77 | Ⓑ 2SA1027R |
| Q811, 812 | 8-729-663-47 | Ⓑ 2SC1364 |
| ⇒ Q813 | 8-729-468-43 | Ⓒ 2SA684 |
| Q814 | 8-729-663-47 | Ⓑ 2SC1364 |
| ⇒ Q815 | 8-760-335-10 | Ⓑ 2SC1474 |
| Q816 | 8-729-663-47 | Ⓑ 2SC1364 |
| ⇒ Q817 | 8-760-335-10 | Ⓑ 2SC1474 |
| ⇒ Q818 | 8-729-612-77 | Ⓑ 2SA1027R |
| Q819–826 | 8-729-663-47 | Ⓑ 2SC1364 |
| Q827 | 8-729-101-31 | Ⓑ N13T1 |
| | | **ICs** |
| IC001 | 8-759-162-90 | Ⓚ μPC629C |
| IC002 | 8-759-907-67 | Ⓘ CX767 |
| IC101, 201 | 8-759-101-74 | Ⓗ CX174 |
| IC301 | 8-759-145-57 | Ⓓ μPC4557C |
| IC401 | 8-743-460-00 | Ⓞ BX346 |
| IC501 | 8-743-470-00 | Ⓞ BX347 |
| IC601 | 8-751-930-00 | Ⓚ CX193 |

- ⇒: Due to standardization, interchangeable replacements may be substituted for parts specified in the diagrams.



www.hifiengine.com

- ⇒: Due to standardization, interchangeable replacements may be substituted for parts specified in the diagrams.

- Circled letters ( Ⓐ to Ⓩ ) are applicable to European models only.

| Ref. No. | Part No. | Description |
|---|---|---|
| IC602, IC604, 605 | 8-759-145-58 | Ⓓ μPC4558C |
| IC801 | 8-759-147-27 | Ⓛ μPD547-027 |
| IC802 | 8-759-959-53 | Ⓙ MSM5953 |
| IC803 | 8-759-133-90 | Ⓖ μPC339C |
| IC804 | 8-759-145-58 | Ⓓ μPC4558C |
| IC805, 806 | 8-759-904-69 | Ⓒ MSM4069 |
| IC807 | 8-759-145-58 | Ⓓ μPC4558C |
| **Diodes** | | |
| ⇒ D001 | 8-719-815-55 | Ⓑ 1S1555 |
| ⇒ D101, 201 | 8-719-815-55 | Ⓑ 1S1555 |
| ⇒ D301, 302 | 8-719-910-65 | Ⓑ HZ6B2L |
| ⇒ D303, 304, ⇒ D601, 602, ⇒ D605 | 8-719-815-55 | Ⓑ 1S1555 |
| D801–810 ⚠ | 8-719-200-02 | Ⓑ 10E2 |
| ⇒ D811–822 | 8-719-815-55 | Ⓑ 1S1555 |
| D823 | 8-719-200-02 | Ⓑ 10E2 |
| ⇒ D824–833 | 8-719-815-55 | Ⓑ 1S1555 |
| D834 | 8-719-305-10 | Ⓔ SEL510 |
| ⇒ D835 | 8-719-815-55 | Ⓑ 1S1555 |
| ⇒ D836, 837 | 8-719-931-15 | Ⓑ EQB01-15 |
| **Thermistors** | | |
| Th401,501 | 1-800-202-XX | Ⓑ S-10K |
| **COILS AND TRANSFORMERS** | | |
| L101, 201 | 1-407-202-XX | Ⓑ 4.7mH, microinductor |
| L102, 202 | 1-407-201-XX | Ⓑ 3.9mH, microinductor |
| L103, 203 | 1-407-200-XX | Ⓑ 3.3mH, microinductor |
| L104, 204 | 1-407-203-XX | Ⓑ 5.6mH, microinductor |
| L301, 302 | 1-407-878-00 | Ⓑ 27mH, microinductor |
| L801 | 1-405-800-11 | Ⓑ Coil, clock osc |
| T301 | 1-433-132-11 | Ⓒ Bias Osc |
| T501 | ⚠ 1-446-379-00 | Ⓝ Transformer, power (AEP model) |
| | ⚠ 1-446-380-00 | Transformer, power (Canadian model) |
| | ⚠ 1-446-480-00 | Transformer, power (E model) |
| T502 | ⚠ 1-446-479-11 | Ⓝ Transformer, discharge-tube (AEP model) |
| | ⚠ 1-446-481-11 | Transformer, discharge-tube (E model) |

**CAPACITORS**

All capacitors are in μF and ceramic unless otherwise noted.
50WV or less are not indicated except for electrolytics.
p : μμF, elect : electrolytic

| Ref. No. | Part No. | Description | | |
|---|---|---|---|---|
| C001 | 1-108-603-00 | Ⓑ 0.1 | | mylar |
| C002 | 1-123-319-00 | Ⓑ 47 | 16V | elect |
| C003 | 1-123-316-00 | Ⓑ 10 | 16V | elect |
| C004 | 1-108-603-00 | Ⓑ 0.1 | | mylar |
| C005 | 1-123-316-00 | Ⓑ 10 | 16V | elect |
| C006 | 1-161-319-00 | Ⓐ 470p | | |
| C101, 201 | 1-161-318-00 | Ⓐ 390p | | |
| C102, 202 | 1-123-320-00 | Ⓑ 100 | 16V | elect |
| C103, 203 | 1-121-915-00 | Ⓑ 4.7 | 25V | elect (low noise) |
| C104, 204 | 1-161-271-00 | Ⓐ 100p | | |
| C105, 205 | 1-123-232-00 | Ⓑ 4.7 | 50V | elect (nonpolarized) |
| C106, 206 | 1-123-320-00 | Ⓑ 100 | 16V | elect |
| C107, 207 | 1-121-911-00 | Ⓑ 0.47 | 50V | elect (low noise) |
| C108, 208 | 1-123-316-00 | Ⓑ 10 | 16V | elect |
| C109, 209 | 1-161-271-00 | Ⓐ 100p | | |
| C110, 210 | 1-121-916-00 | Ⓑ 10 | 16V | elect (low noise) |
| C111, 211 | 1-123-316-00 | Ⓑ 10 | 16V | elect |
| C112, 212 | 1-123-320-00 | Ⓑ 100 | 16V | elect |
| C113, 213 | 1-108-563-00 | Ⓑ 0.0022 | | mylar |
| C114, 214 | 1-161-320-00 | Ⓐ 560p | | |
| C115, 215 | 1-101-005-00 | Ⓐ 0.022 | | |
| C116, 216 | 1-121-911-00 | Ⓑ 100 | 25V | elect |
| C117, 217 | 1-161-271-00 | Ⓐ 100p | | |
| C118, 218 | 1-161-320-00 | Ⓐ 560p | | |
| C119, 219 | 1-129-776-00 | Ⓑ 0.022 | 100V | polypropylene |
| C120, 220 | 1-123-232-00 | Ⓑ 4.7 | 50V | elect (nonpolarized) |
| C121, 221 | 1-123-321-00 | Ⓑ 220 | 16V | elect |
| C122, 222 | 1-108-589-00 | Ⓑ 0.027 | | mylar |
| C123, 223 | 1-102-074-00 | Ⓐ 0.001 | | |
| C124, 224 | 1-131-212-00 | 0.33 | 35V | tantalum |
| C125, 225 | 1-108-603-00 | Ⓑ 0.1 | | mylar |

**Note: The components identified by shading and mark ⚠ are critical for safety. Replace only with part number specified.**

**Note: Les composants identifiés par une trame et une marque ⚠ sont critiques pour la sécurité. Ne les remplacer que par une pièce portant le numéro spécifié.**



www.hifiengine.com

- Circled letters ( Ⓐ to Ⓩ ) are applicable to European models only.

| Ref. No. | Part No. | Description | | | |
|---|---|---|---|---|---|
| C126, 226 | 1-108-579-00 | Ⓑ | 0.01 | | mylar |
| C127, 227 | 1-108-593-00 | Ⓑ | 0.039 | | mylar |
| C128, 228 | 1-123-316-00 | Ⓑ | 10 | 16V | elect |
| C129, 229<br>C130, 230) | 1-108-597-00 | Ⓑ | 0.056 | | mylar |
| C131, 231 | 1-108-571-00 | Ⓑ | 0.0047 | | mylar |
| C132, 232 | 1-123-232-00 | Ⓑ | 4.7 | 50V | elect (nonpolarized) |
| C133, 233 | 1-123-234-00 | Ⓑ | 10 | 50V | elect (nonpolarized) |
| C134, 234 | 1-123-230-00 | Ⓑ | 2.2 | 50V | elect (nonpolarized) |
| C135, 235 | 1-123-320-00 | Ⓑ | 100 | 16V | elect |
| C136, 236 | | Ⓐ | 100p | | |
| C137, 237 | 1-108-593-00 | Ⓑ | 0.039 | | mylar |
| C138, 238 | 1-123-230-00 | Ⓑ | 2.2 | 50V | elect (nonpolarized) |
| C139, 239 | 1-121-414-00 | Ⓑ | 100 | 10V | elect |
| C140, 240 | 1-108-587-00 | Ⓑ | 0.022 | | mylar |
| C141, 241 | 1-108-589-00 | Ⓑ | 0.027 | | mylar |
| C142, 242 | 1-108-587-00 | Ⓑ | 0.022 | | mylar |
| C143, 243 | 1-108-593-00 | Ⓑ | 0.039 | | mylar |
| C144, 244 | 1-108-589-00 | Ⓑ | 0.027 | | mylar |
| C145, 245 | 1-108-362-00 | Ⓑ | 0.082 | | mylar |
| C146, 246 | 1-161-323-00 | Ⓐ | 0.001 | | |
| C147, 247 | 1-108-589-00 | Ⓑ | 0.027 | | mylar |
| C148, 248<br>C149, 249) | 1-123-320-00 | Ⓑ | 100 | 16V | elect |
| C150, 250 | 1-108-583-00 | Ⓑ | 0.015 | | mylar |
| C151, 251 | 1-108-591-00 | Ⓑ | 0.033 | | mylar |
| C301, 302 | 1-123-323-00 | Ⓑ | 470 | 16V | elect |
| C303, 304 | 1-123-307-00 | Ⓑ | 100 | 10V | elect |
| C305, 306 | 1-123-335-00 | Ⓑ | 330 | 25V | elect |
| C307 | 1-129-701-00 | Ⓑ | 0.01 | 100V | polyprophyrene |
| C308 | 1-130-189-00 | Ⓑ | 0.018 | 100V | polyprophyrene |
| C309 | 1-131-216-00 | | 1.5 | 35V | solid-tantalum |
| C310 | 1-129-712-00 | Ⓑ | 0.0068 | 630V | plastic |
| C311, 312 | 1-141-215-00 | Ⓑ | Trimmer | | |
| C313, 315 | 1-107-168-00 | Ⓑ | 91p | 500V | silvered-mica |
| C314, 316 | 1-107-137-00 | Ⓑ | 180p | | silvered-mica |
| C317, 318 | 1-121-415-00 | Ⓑ | 100 | 16V | elect |

| Ref. No. | Part No. | Description | | | |
|---|---|---|---|---|---|
| C320 | 1-123-351-00 | Ⓑ | 0.47 | 50V | elect |
| C321, 322 | 1-123-334-00 | Ⓑ | 220 | 25V | elect |
| C323 | 1-123-329-00 | Ⓑ | 10 | 25V | elect |
| C325 | 1-131-219-00 | Ⓑ | 4.7 | 35V | solid-tantalum |
| C326 | 1-123-351-00 | Ⓑ | 0.47 | 50V | elect |
| C327 | | | 10 | 10V | elect (AEP, E model) |
| C329 | 1-161-013-00 | | 0.01 | | (semiconductor) |
| C401, 501 | 1-123-319-00 | Ⓑ | 47 | 16V | elect |
| C402, 502 | 1-131-197-00 | Ⓑ | 3.3 | 16V | solid-tantalum |
| C403, 503 | 1-161-271-00 | Ⓐ | 100p | | |
| C404, 504 | 1-123-352-00 | Ⓑ | 1 | 50V | elect |
| C601 | 1-108-589-00 | Ⓑ | 0.01 | | mylar |
| C602 | 1-123-351-00 | Ⓑ | 0.47 | 50V | elect |
| C603–605 | 1-123-316-00 | Ⓑ | 10 | 16V | elect |
| C606 | 1-130-188-00 | Ⓑ | 0.01 | 100V | composite-plastic |
| C607 | 1-108-579-00 | Ⓑ | 0.01 | | mylar |
| C608 | 1-108-589-00 | Ⓑ | 0.027 | | mylar |
| C609 | 1-108-573-00 | Ⓑ | 0.0056 | | mylar |
| C610, 611 | 1-108-579-00 | Ⓑ | 0.01 | | mylar |
| C612, 613 | 1-102-903-00 | Ⓑ | 130p | | |
| C614 | 1-102-491-00 | Ⓐ | 51p | | |
| C615 | 1-131-211-00 | Ⓑ | 0.22 | 35V | solid-tantalum |
| C616 | 1-108-597-00 | Ⓑ | 0.056 | | mylar |
| C617 | 1-123-295-00 | Ⓑ | 100 | 6.3V | elect |
| C618 | 1-108-595-00 | Ⓑ | 0.01 | | mylar |
| C619–621 | 1-108-579-00 | Ⓑ | 0.01 | | mylar |
| C622 | 1-123-232-00 | Ⓑ | 4.7 | 50V | elect (nonpolarized) |
| C623, 624 | 1-123-320-00 | Ⓑ | 100 | 16V | elect |
| C625 | 1-108-609-00 | Ⓑ | 0.18 | | mylar |
| C626 | 1-123-232-00 | Ⓑ | 4.7 | 50V | elect (nonpolarized) |
| C627 | 1-108-609-00 | Ⓑ | 0.18 | | mylar |
| C628 | 1-123-232-00 | Ⓑ | 4.7 | 50V | elect (nonpolarized) |
| C629, 630 | 1-108-595-00 | Ⓑ | 0.047 | | mylar |
| C631, 632 | 1-123-228-00 | Ⓑ | 1 | 50V | elect (nonpolarized) |



www.hifiengine.com

- Circled letters ( Ⓐ to Ⓩ ) are applicable to European models only.

| Ref. No. | Part No. | Description | | | |
|---|---|---|---|---|---|
| C801 | ⚠1-123-336-00 | Ⓑ 470 | 25V | elect | |
| C802, 803 | ⚠1-123-337-00 | Ⓑ 1000 | 25V | elect | |
| C804, 805 | ⚠1-123-324-00 | Ⓑ 1000 | 16V | elect | |
| C806 | 1-123-330-00 | Ⓑ 22 | 25V | elect | |
| C807 | 1-123-318-00 | Ⓑ 33 | 16V | elect | |
| C808 | 1-123-308-00 | Ⓑ 220 | 10V | elect | |
| C809 | 1-121-391-00 | Ⓑ 1 | 50V | elect | |
| C810 | 1-123-351-00 | Ⓑ 0.47 | 50V | elect | |
| C811 | 1-123-353-00 | Ⓑ 2.2 | 50V | elect | |
| C812 | | Ⓑ 10 | 10V | elect | |
| C813, 814 | 1-123-316-00 | Ⓑ 10 | 16V | elect | |
| C815 | 1-121-391-00 | Ⓑ 1 | 50V | elect | |
| C816 | 1-123-353-00 | Ⓑ 2.2 | 50V | elect | |
| C817, 818 | 1-123-351-00 | Ⓑ 0.47 | 50V | elect | |
| C819 | 1-123-316-00 | Ⓑ 10 | 16V | elect | |
| C820 | 1-108-361-00 | Ⓑ 0.056 | | mylar | |
| C821 | 1-108-244-00 | Ⓑ 0.033 | | mylar | |
| C822 | | Ⓑ 10 | 10V | elect | |
| C823 | 1-121-391-00 | Ⓑ 1 | 50V | elect | |
| C824 | 1-108-244-00 | Ⓑ 0.033 | | mylar | |
| C825 | 1-123-353-00 | Ⓑ 2.2 | 50V | elect | |
| C826 | 1-108-244-00 | Ⓑ 0.033 | | mylar | |
| C827 | 1-161-323-00 | Ⓐ 0.001 | | | |
| C828 | 1-161-330-00 | Ⓐ 0.01 | | | |
| C829 | 1-161-271-00 | Ⓐ 100p | | | |
| C830 | 1-123-316-00 | Ⓑ 10 | 16V | elect | |
| C831, 832 | 1-123-353-00 | Ⓑ 2.2 | 50V | elect | |
| C833 | 1-123-351-00 | Ⓑ 0.47 | 50V | elect | |
| C834 | | | | | |
| C835 | 1-161-330-00 | Ⓐ 0.01 | | | |
| C836 | 1-123-318-00 | Ⓑ 33 | 16V | elect | |
| C1001 | 1-130-267-00 | 0.022 | 250V | metallized-film (AEP, E model) | |
| C1002 | 1-130-267-00 | 0.022 | 250V | metallized film (E model) | |

**RESISTORS**

All resistors are in ohms. Common ¼W carbon resistors are omitted. Refer to the list on the last page for their part numbers.

| Ref. No. | Part No. | Description | | | |
|---|---|---|---|---|---|
| R002 | 1-214-163-00 | Ⓐ 20k | 1% | metal oxide | |
| R003 | 1-214-156-00 | Ⓐ 10k | 1% | metal oxide | |
| R004 | 1-214-163-00 | Ⓐ 20k | 1% | metal oxide | |
| R005 | 1-214-156-00 | Ⓐ 10k | 1% | metal oxide | |
| R006 | 1-214-163-00 | Ⓐ 20k | 1% | metal oxide | |
| R007 | 1-214-156-00 | Ⓐ 10k | 1% | metal oxide | |
| R008 | 1-214-163-00 | Ⓐ 20k | 1% | metal oxide | |
| R009 | 1-214-156-00 | Ⓐ 10k | 1% | metal oxide | |
| R010, 011 | 1-214-163-00 | Ⓐ 20k | 1% | metal oxide | |
| R115, 215 | 1-214-136-00 | Ⓐ 1.5k | 1% | metal oxide | |
| R116, 216 | 1-214-150-00 | Ⓐ 5.6k | 1% | metal oxide | |
| R119, 219 | 1-244-881-00 | Ⓐ 2.2k | ½W | | |
| R120, 220 | 1-214-172-00 | Ⓐ 47k | 1% | metal oxide | |
| R126, 226 | 1-214-110-00 | Ⓐ 120 | 1% | metal oxide | |
| R130, 230 | 1-214-148-00 | Ⓐ 4.7k | 1% | metal oxide | |
| R157, 257 | 1-214-140-00 | Ⓐ 2.2k | 1% | metal oxide | |
| R301 | 1-214-124-00 | Ⓐ 470 | 1% | metal oxide | |
| R302, 303 | 1-214-130-00 | Ⓐ 820 | 1% | metal oxide | |
| R304 | 1-214-124-00 | Ⓐ 470 | 1% | metal oxide | |
| R309 | ⚠1-212-857-00 | Ⓐ 10 | | fusible | |
| R322, 323 | ⚠1-212-881-00 | Ⓑ 100 | | fusible | |
| R327, 328 | 1-244-865-00 | Ⓐ 470 | ½W | | |
| R329 | 1-244-881-00 | Ⓐ 2.2k | ½W | | |
| R607 | 1-244-857-00 | Ⓐ 220 | ½W | | |
| R610 | 1-214-170-00 | Ⓐ 39k | 1% | metal oxide | |
| R613 | 1-214-177-00 | Ⓐ 75k | 1% | metal oxide | |
| R650, 651 | ⚠1-217-465-00 | Ⓑ 0.47 | 1W | fusible | |
| R709, 710 | ⚠1-217-469-00 | Ⓑ 1 | 1W | fusible | |
| R801 | ⚠1-247-192-00 | Ⓐ 10 | ½W | (nonflammable) | |
| R802 | ⚠1-247-131-00 | Ⓐ 1k | | (nonflammable) | |
| R803 | ⚠1-247-192-00 | Ⓐ 10 | ½W | (nonflammable) | |
| R804 | ⚠1-247-131-00 | Ⓐ 1k | | (nonflammable) | |
| R805 | ⚠1-247-212-00 | Ⓐ 68 | ½W | (nonflammable) | |
| R808 | ⚠1-217-418-00 | Ⓑ 0.47 | ½W | fusible | |
| R809 | ⚠1-247-131-00 | Ⓐ 1k | | (nonflammable) | |
| R812 | ⚠1-247-184-00 | Ⓐ 2.2 | ½W | (nonflammable) | |
| R813 | ⚠1-247-121-00 | Ⓐ 390 | | (nonflammable) | |
| R837 | ⚠1-247-119-00 | Ⓐ 330 | | (nonflammable) | |
| R1001 | ⚠1-206-696-00 | Ⓑ 22k | 2W | metal oxide (nonflammable) | |
| RV001 | 1-224-644-XX | Ⓑ 4.7k, adjustable; gain | | | |
| RV101, 201 | 1-224-962-00 | Ⓕ 20kΩ/20kΩ-A, variable; MIC | | | |
| RV102, 202 | 1-224-962-00 | Ⓕ 20kΩ/20kΩ-A, variable; LINE | | | |

**Note: The components identified by shading and mark ⚠ are critical for safety. Replace only with part number specified.**

**Note: Les composants identifiés par une trame et une marque ⚠ sont critiques pour la sécurité. Ne les remplacer que par une pièce portant le numéro spécifié.**



www.hifiengine.com

- Circled letters ( Ⓐ to Ⓩ ) are applicable to European models only.

| Ref. No. | Part No. | Description |
|---|---|---|
| RV103, 203 | 1-226-438-00 | Ⓓ 50kΩ/50kΩ-B, variable; REC MASTER |
| RV104, 204 | 1-224-252-XX | Ⓑ 10kΩ-B, adjustable; playback level |
| RV105, 205 | 1-224-254-XX | Ⓑ 47kΩ-B, adjustable; record level |
| RV106, 206 | 1-226-440-00 | Ⓕ 20kΩ/20kΩ-B, variable; LINE OUT |
| RV107, 207 | 1-226-439-00 | Ⓓ 20kΩ/20kΩ-B, variable; HEADPHONES |
| RV401, 501 | 1-224-646-XX | Ⓑ 22kΩ-B, adjustable; offset |
| RV601 | 1-224-491-00 | Ⓑ 22kΩ-B, adjustable; tape speed |
| RV602, 603 | 1-224-643-XX | Ⓑ 2.2kΩ-B, adjustable; capstan-motor gain |
| RV604, 605 | 1-224-645-XX | Ⓑ 10kΩ-B, adjustable; capstan-motor offset |
| RV606 | 1-224-642-XX | Ⓑ 1kΩ-B, adjustable; reel-motor torque |
| RV607 | 1-224-644-XX | Ⓑ 4.7kΩ-B, adjustable; reel-motor gain balance |
| RV608, 609 | 1-224-644-XX | Ⓑ 4.7kΩ-B, adjustable; reel-motor offset |

**CONNECTORS**

| Ref. No. | Part No. | Description |
|---|---|---|
| CN101 | ⚠1-526-528-51 | Connector, AC OUTLET (Canadian model) |
| J001 | 1-561-293-00 | Ⓓ Receptacle, REMOTE |
| J101, 201 | 1-507-525-00 | Ⓓ Jack, 2-unit; MIC L, R |
| J102, 202 | 1-507-553-00 | Ⓒ Jack, stereo-binaural; HEADPHONES |
| J103, 203 J104, 204 | 1-507-531-00 | Ⓓ Board, 4-pin jack; LINE IN/LINE OUT |
| J301 | 1-509-922-11 | Ⓑ Connector, REC/PB (AEP, E model) |

**SWITCHES**

| Ref. No. | Part No. | Description |
|---|---|---|
| S301 – 303 | 1-552-705-00 | Ⓖ Pushbutton, DOLBY NR, EQ, BIAS |
| S304, 305 | 1-552-571-00 | Ⓑ Pushbutton, TYPE IV (EQ, BIAS) |
| S401–404 | 1-552-687-00 | Ⓑ Pushbutton, CLEAR, PROGRAM, PEAK |
| S501 | ⚠1-552-610-00 | Rotary, POWER (Canadian model) |
| | ⚠1-552-611-00 | Ⓓ Rotary, POWER (AEP, E model) |
| S801–807 | 1-552-704-00 | Ⓑ Pushbutton, rewind, stop, forward, record, pause, REC MUTE |
| S808, 809 | 1-552-268-00 | Ⓑ Slide, miserasure-prevension, cassette |
| S810 | 1-552-520-00 | Ⓒ Slide, TIMER |
| S811 | | included in tape counter |
| S812 | 1-552-520-00 | Ⓒ Slide, MEMORY – AMS |

**MISCELLANEOUS**

| Ref. No. | Part No. | Description |
|---|---|---|
| CP501 | ⚠1-231-341-21 | Encapsulated Component (Canadian model) |
| HE | 8-825-724-00 | Ⓕ Head, erase; EF201-36 |
| HRP | 8-825-713-10 | Ⓞ Head, record/playback; PS185-3602B1 |
| LPF101,201 | 1-231-388-00 | Ⓓ Filter, low-pass |
| PL001 | 1-518-299-91 | Ⓑ Lamp, 6V, 35mA (TIMER) |
| PL101 | 1-518-299-91 | Ⓑ Lamp, 6V, 35mA (cassette compartment) |
| PL301–303 | | included in S301 – 303 |
| PL304 | 1-518-299-91 | Ⓑ Lamp, 6V, 35mA (TYPE IV) |
| PL801–806 | 1-518-259-00 | Ⓑ Lamp, 5V, 60mA (function switch) |
| PM1, 2 | 1-454-195-00 | Ⓕ Solenoid; brake, head |
| RY301 | 1-515-323-00 | Ⓖ Relay |
| RY302 | 1-515-297-11 | Ⓕ Relay, reed (AEP, E model) |
| X601 | 1-527-401-11 | Ⓓ Crystal Unit |
| | X-3558-338-2 | Ⓜ Motor Ass'y, reel |
| | 1-452-155-00 | Ⓑ Magnet |
| | 1-462-163-00 | Ⓒ Coil, motor-stator |
| | ⚠1-519-164-XX | Ⓖ Tube, discharge |
| | ⚠1-534-817-XX | Ⓓ Cord, power (AEP model) |
| | ⚠1-534-986-XX | Cord, power (Canadian model) |
| | 1-543-122-00 | Ⓓ Head, detection |
| | 1-548-531-00 | Ⓖ Counter, tape |
| | ⚠1-551-473-31 | Cord, power (E2 model) |
| | ⚠1-551-530-11 | Cord, power (E1 model) |
| | ⚠1-552-026-00 | Voltage Selector (E model) |
| | 1-588-592-00 | Ⓐ Printed Circuit Board, timer |
| | 1-588-597-00 | Ⓕ Printed Circuit Board, motor |

**Note: The components identified by shading and mark ⚠ are critical for safety. Replace only with part number specified.**

**Note: Les composants identifiés par une trame et une marque ⚠ sont critiques pour la sécurité. Ne les remplacer que par une pièce portant le numéro spécifié.**



www.hifiengine.com

- Circled letters ( Ⓐ to Ⓩ ) are applicable to European models only.

## ACCESSORIES AND PACKING MATERIALS

| *Part No.* | *Description* |
|---|---|
| X-3701-105-0 | Ⓐ Tip Ass'y, head-cleaning |
| 1-551-734-11 | Ⓑ Cord, connection; RK-74A |
| 3-562-684-00 | Ⓑ Cushion, bottom (AEP, E model) |
| 3-562-685-00 | Ⓑ Cushion, front-top (AEP, E model) |
| 3-562-686-00 | Ⓑ Cushion, rear-top (AEP, E model) |
| 3-562-692-00 | Ⓐ Board, protection |
| 3-562-708-00 | Ⓔ Carton (AEP, E model) |
| 3-562-709-00 | Carton (Canadian model) |
| 3-562-713-00 | Cushion, top (Canadian model) |
| 3-562-714-00 | Cushion, bottom (Canadian model) |
| 3-701-630-00 | Ⓐ Bag, plastic (printed matters) |
| 3-770-881-11 | Ⓔ Manual, instruction (AEP, E model) |
| 3-770-881-21<br>3-794-490-31 ) | Ⓙ Manual, instruction (Canadian model) |
| 3-793-828-11 | Ⓑ Tag, cassette caution |
| 3-794-468-11 | Ⓑ Tag, EJECT-button caution |
| 4-837-003-00 | Ⓓ Bag, protection (set) |



www.hifiengine.com

## MYLAR CAPACITORS Ⓐ

**Note:** Circled letters (Ⓐ to Ⓩ) are applicable to European models only.

| CAP. (μF) | RATING 50 VOLT. PART No. | 100 VOLT. PART No. | 200 VOLT. PART No. | CAP. (μF) | 50 VOLT. PART No. | 100 VOLT. PART No. | 200 VOLT. PART No. | CAP. (μF) | 50 VOLT. PART No. | 100 VOLT. PART No. | 200 VOLT. PART No. |
|---|---|---|---|---|---|---|---|---|---|---|---|
| 0.001 | 1-108-227-00 | 1-108-365-00 | 1-108-409-00 | 0.01 | 1-108-239-00 | 1-108-377-00 | 1-108-421-00 | 0.1 | 1-108-251-00 | 1-108-389-00 | 1-108-433-00 |
| 0.0012 | 1-108-351-00 | 1-108-366-00 | 1-108-410-00 | 0.012 | 1-108-357-00 | 1-108-378-00 | 1-108-422-00 | 0.12 | 1-108-363-00 | 1-108-390-00 | 1-108-434-00 |
| 0.0015 | 1-108-228-00 | 1-108-367-00 | 1-108-411-00 | 0.015 | 1-108-240-00 | 1-108-379-00 | 1-108-423-00 | 0.15 | 1-108-252-00 | 1-108-391-00 | 1-108-435-00 |
| 0.0018 | 1-108-352-00 | 1-108-368-00 | 1-108-412-00 | 0.018 | 1-108-358-00 | 1-108-380-00 | 1-108-424-00 | 0.18 | 1-108-364-00 | 1-108-392-00 | 1-108-436-00 |
| 0.0022 | 1-108-230-00 | 1-108-369-00 | 1-108-413-00 | 0.022 | 1-108-242-00 | 1-108-381-00 | 1-108-425-00 | 0.22 | 1-108-254-00 | 1-108-393-00 | 1-108-437-00 |
| 0.0027 | 1-108-353-00 | 1-108-370-00 | 1-108-414-00 | 0.027 | 1-108-359-00 | 1-108-382-00 | 1-108-426-00 | 0.27 | 1-108-854-00 | – | – |
| 0.0033 | 1-108-232-00 | 1-108-371-00 | 1-108-415-00 | 0.033 | 1-108-244-00 | 1-108-383-00 | 1-108-427-00 | 0.33 | 1-108-855-00 | – | – |
| 0.0039 | 1-108-354-00 | 1-108-372-00 | 1-108-416-00 | 0.039 | 1-108-360-00 | 1-108-384-00 | 1-108-428-00 | 0.39 | 1-108-856-00 | | – |
| 0.0047 | 1-108-234-00 | 1-108-373-00 | 1-108-417-00 | 0.047 | 1-108-246-00 | 1-108-385-00 | 1-108-429-00 | 0.47 | 1-108-857-00 | | – |
| 0.0056 | 1-108-355-00 | 1-108-374-00 | 1-108-418-00 | 0.056 | 1-108-361-00 | 1-108-386-00 | 1-108-430-00 | | | | |
| 0.0068 | 1-108-237-00 | 1-108-375-00 | 1-108-419-00 | 0.068 | 1-108-249-00 | 1-108-387-00 | 1-108-431-00 | | | | |
| 0.0082 | 1-108-356-00 | 1-108-376-00 | 1-108-420-00 | 0.082 | 1-108-362-00 | 1-108-388-00 | 1-108-432-00 | | | | |

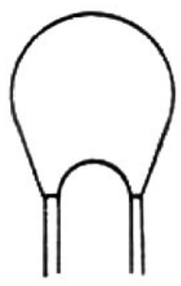

## TANTALUM CAPACITORS

| CAP. (μF) | RATING 3.15 VOLT. PART No. | 6.3 VOLT. PART No. | 10 VOLT. PART No. | 16 VOLT. PART No. | 20 VOLT. PART No. | 25 VOLT. PART No. | 35 VOLT. PART No. |
|---|---|---|---|---|---|---|---|
| | | | | | → : Use the high voltage rated one. | | |
| 0.01 | | | | | → | → | 1-131-396-00 Ⓑ |
| 0.015 | | | | | | → | 1-131-397-00 Ⓑ |
| 0.022 | | | | | | → | 1-131-398-00 Ⓑ |
| 0.033 | | | | | | → | 1-131-399-00 Ⓑ |
| 0.047 | | | | | | → | 1-131-400-00 Ⓑ |
| 0.068 | | | | | → | → | 1-131-401-00 Ⓑ |
| 0.1 | | | | | → | → | 1-131-402-00 Ⓑ |
| 0.15 | | | | | → | → | 1-131-403-00 Ⓑ |
| 0.22 | | | | | → | → | 1-131-404-00 Ⓑ |
| 0.33 | | | | | → | 1-131-409-00 Ⓑ | 1-131-405-00 Ⓑ |
| 0.47 | – | – | – | – | 1-131-412-00 Ⓑ | → | 1-131-406-00 Ⓑ |
| 0.68 | – | – | – | 1-131-415-00 Ⓑ | → | 1-131-410-00 Ⓑ | 1-131-407-00 Ⓑ |
| 1.0 | – | – | 1-131-418-00 Ⓑ | – | 1-131-413-00 Ⓑ | → | 1-131-408-00 Ⓑ |
| 1.5 | – | 1-131-421-00 Ⓑ | – | 1-131-416-00 Ⓑ | → | 1-131-411-00 Ⓑ | 1-131-348-00 Ⓑ |
| 2.2 | 1-131-424-00 Ⓑ | – | 1-131-419-00 Ⓑ | – | 1-131-414-00 Ⓑ | 1-131-355-00 Ⓑ | 1-131-349-00 Ⓑ |
| 3.3 | – | 1-131-422-00 Ⓑ | – | 1-131-417-00 Ⓑ | 1-131-362-00 Ⓑ | 1-131-356-00 Ⓑ | 1-131-350-00 Ⓑ |
| 4.7 | 1-131-425-00 Ⓑ | – | 1-131-420-00 Ⓑ | 1-131-369-00 Ⓑ | 1-131-363-00 Ⓑ | 1-131-357-00 Ⓑ | 1-131-351-00 Ⓒ |
| 6.8 | – | 1-131-423-00 Ⓑ | 1-131-376-00 Ⓑ | 1-131-370-00 Ⓑ | 1-131-364-00 Ⓑ | 1-131-358-00 Ⓒ | 1-131-352-00 Ⓒ |
| 10 | 1-131-426-00 Ⓑ | 1-131-383-00 Ⓑ | 1-131-377-00 Ⓑ | 1-131-371-00 Ⓑ | 1-131-365-00 Ⓒ | 1-131-359-00 Ⓒ | 1-131-353-00 Ⓓ |
| 15 | 1-131-390-00 Ⓑ | 1-131-384-00 Ⓑ | 1-131-378-00 Ⓑ | 1-131-372-00 Ⓑ | 1-131-366-00 Ⓒ | 1-131-360-00 Ⓓ | |
| 22 | 1-131-391-00 Ⓑ | 1-131-385-00 Ⓑ | 1-131-379-00 Ⓒ | 1-131-373-00 Ⓒ | 1-131-367-00 Ⓓ | | |
| 33 | 1-131-392-00 Ⓑ | 1-131-386-00 Ⓒ | 1-131-380-00 Ⓒ | 1-131-374-00 Ⓓ | | | |
| 47 | 1-131-393-00 Ⓒ | 1-131-387-00 Ⓒ | 1-131-381-00 Ⓓ | – | | | |
| 68 | 1-131-394-00 Ⓑ | 1-131-388-00 Ⓒ | – | – | | | |
| 100 | 1-131-395-00 Ⓓ | – | – | – | | | |

## TANTALUM CAPACITORS

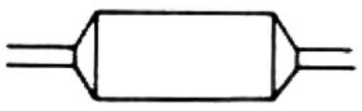

| CAP. (μF) | RATING 3 VOLT. PART No. | 6.3 VOLT. PART No. | 10 VOLT. PART No. | 16 VOLT. PART No. | 20 VOLT. PART No. | 35 VOLT. PART No. |
|---|---|---|---|---|---|---|
| 0.033 | | | | | | 1-131-273-00 Ⓔ |
| 0.047 | | | | | | 1-131-274-00 Ⓔ |
| 0.068 | | | | | | 1-131-275-00 Ⓔ |
| 0.1 | | | | | | 1-131-276-00 Ⓓ |
| 0.15 | | | | | | 1-131-277-00 Ⓓ |
| 0.22 | | | – | – | 1-131-262-00 Ⓓ | 1-131-278-00 Ⓓ |
| 0.33 | | | – | – | 1-131-263-00 Ⓓ | 1-131-279-00 Ⓓ |
| 0.47 | | | 1-131-169-00 Ⓓ | – | 1-131-264-00 Ⓓ | 1-131-280-00 Ⓓ |
| 0.68 | | | | 1-131-258-00 Ⓓ | 1-131-265-00 Ⓓ | 1-131-281-00 Ⓓ |
| 1.0 | | | 1-131-254-00 Ⓓ | – | 1-131-266-00 Ⓓ | 1-131-282-00 Ⓓ |
| 1.5 | | 1-131-250-00 Ⓓ | – | – | 1-131-267-00 Ⓓ | 1-131-283-00 Ⓔ |
| 2.2 | | – | – | 1-131-259-00 Ⓓ | 1-131-268-00 Ⓓ | 1-131-284-00 Ⓔ |
| 3.3 | | – | 1-131-255-00 Ⓓ | | 1-131-269-00 Ⓓ | – |
| 4.7 | | 1-131-251-00 Ⓔ | 1-131-171-00 Ⓓ | – | 1-131-270-00 Ⓓ | – |
| 6.8 | | – | – | 1-131-260-00 Ⓓ | 1-131-271-00 Ⓔ | – |
| 10 | – | – | 1-131-256-00 Ⓓ | – | 1-131-272-00 Ⓔ | – |
| 15 | – | 1-131-252-00 Ⓓ | – | 1-131-261-00 Ⓔ | | |
| 22 | – | – | 1-131-257-00 Ⓔ | – | | |
| 33 | 1-131-176-00 Ⓓ | 1-131-253-00 Ⓔ | 1-131-173-00 Ⓒ | – | | |
| 47 | 1-131-288-00 Ⓕ | 1-131-174-00 Ⓓ | – | – | | |
| 100 | 1-131-177-00 Ⓓ | | | | | |



www.hifiengine.com

## ELECTROLYTIC CAPACITORS

**Note:** Circled letter ( Ⓐ to Ⓩ ) are applicable to European models only.

RATING → : Use the high voltage rated one.

| CAP. (μF) | 6.3 VOLT. PART No. | 10 VOLT. PART No. | 16 VOLT. PART No. | 25 VOLT. PART No. | 35 VOLT. PART No. | 50 VOLT. PART No. |
|---|---|---|---|---|---|---|
| 0.47 | | | | | → | 1-121-726-00 Ⓐ |
| 1.0 | | | | | → | 1-121-391-00 Ⓐ |
| 2.2 | | | | | → | 1-121-450-00 Ⓐ |
| 3.3 | → | → | → | 1-121-392-00 Ⓐ | → | 1-121-393-00 Ⓐ |
| 4.7 | → | → | → | 1-121-395-00 Ⓐ | → | 1-121-396-00 Ⓐ |
| 10 | → | → | 1-121-651-00 Ⓐ | 1-121-398-00 Ⓐ | → | 1-121-738-00 Ⓐ |
| 22 | → | → | 1-121-479-00 Ⓐ | 1-121-480-00 Ⓐ | 1-121-662-00 Ⓐ | 1-121-152-00 Ⓐ |
| 33 | → | → | 1-121-403-00 Ⓐ | 1-121-404-00 Ⓐ | 1-121-652-00 Ⓑ | 1-121-405-00 Ⓐ |
| 47 | → | 1-121-352-00 Ⓐ | 1-121-409-00 Ⓐ | 1-121-410-00 Ⓐ | 1-121-653-00 Ⓑ | 1-121-411-00 Ⓐ |
| 100 | → | 1-121-414-00 Ⓐ | 1-121-415-00 Ⓐ | 1-121-416-00 Ⓐ | 1-121-357-00 Ⓑ | 1-121-417-00 Ⓑ |
| 220 | 1-121-419-00 Ⓑ | 1-121-420-00 Ⓑ | 1-121-421-00 Ⓐ | 1-121-422-00 Ⓑ | 1-121-261-00 Ⓒ | 1-121-423-00 Ⓑ |
| 330 | 1-121-751-00 Ⓑ | 1-121-805-00 Ⓑ | 1-121-521-00 Ⓒ | 1-121-654-00 Ⓑ | 1-121-655-00 Ⓓ | 1-121-656-00 Ⓒ |
| 470 | 1-121-424-00 Ⓑ | 1-121-425-00 Ⓒ | 1-121-426-00 Ⓒ | 1-121-733-00 Ⓑ | 1-121-361-00 Ⓔ | 1-121-810-00 Ⓓ |
| 1000 | – | 1-121-736-00 Ⓒ | 1-121-245-00 Ⓓ | 1-121-657-00 Ⓓ | 1-121-388-00 Ⓔ | 1-123-061-00 Ⓕ |
| 2200 | 1-121-658-00 Ⓑ | 1-121-659-00 Ⓒ | 1-121-660-00 Ⓓ | 1-123-067-00 Ⓕ | 1-121-984-00 Ⓕ | – |
| 3300 | 1-121-661-00 Ⓓ | 1-123-075-00 Ⓔ | 1-123-071-00 Ⓕ | – | – | – |

| CAP. (μF) | 100 VOLT. PART No. | 160 VOLT. PART No. | 250 VOLT. PART No. | 350 VOLT. PART No. |
|---|---|---|---|---|
| 0.47 | – | – | – | – |
| 1.0 | 1-123-249-00 Ⓐ | 1-123-252-00 Ⓐ | 1-123-003-00 Ⓑ | 1-121-168-00 Ⓑ |
| 2.2 | 1-123-250-00 Ⓐ | 1-123-026-00 Ⓑ | – | 1-123-028-00 Ⓑ |
| 3.3 | 1-121-995-00 Ⓐ | – | 1-123-004-00 Ⓑ | 1-123-006-00 Ⓒ |
| 4.7 | 1-123-255-00 Ⓐ | 1-121-246-00 Ⓑ | 1-121-759-00 Ⓑ | 1-123-007-00 Ⓓ |
| 10 | 1-121-126-00 Ⓑ | 1-121-999-00 Ⓑ | 1-123-254-00 Ⓒ | 1-123-008-00 Ⓓ |
| 22 | 1-121-996-00 Ⓒ | 1-123-253-00 Ⓒ | 1-123-005-00 Ⓓ | 1-123-022-00 Ⓓ |
| 33 | 1-121-997-00 Ⓒ | 1-121-757-00 Ⓒ | – | – |
| 47 | 1-123-251-00 Ⓒ | 1-121-919-00 Ⓒ | – | – |
| 100 | 1-123-084-00 Ⓕ | – | – | – |

## CERAMIC CAPACITORS Ⓐ

RATING

| CAP. (pF) | 50 VOLT. PART No. | CAP. (pF) | 50 VOLT. PART No. | CAP. (pF) | 50 VOLT. PART No. | CAP. (μF) | 50 VOLT. PART No. |
|---|---|---|---|---|---|---|---|
| 0.5 | 1-101-837-00 | 22 | 1-102-959-00 | 150 | 1-101-361-00 | 0.001 | 1-102-074-00 |
| 0.75 | 1-101-586-00 | 24 | 1-102-960-00 | 160 | 1-101-367-00 | 0.0012 | 1-102-118-00 |
| 1.0 | 1-102-934-00 | 27 | 1-102-961-00 | 180 | 1-102-976-00 | 0.0015 | 1-102-119-00 |
| 1.5 | 1-101-576-00 | 30 | 1-102-962-00 | 200 | 1-102-977-00 | 0.0018 | 1-102-120-00 |
| 2.0 | 1-102-935-00 | 33 | 1-102-963-00 | 220 | 1-102-978-00 | 0.0022 | 1-102-121-00 |
| 3 | 1-102-936-00 | 36 | 1-102-964-00 | 240 | 1-102-979-00 | 0.0027 | 1-102-122-00 |
| 4 | 1-102-937-00 | 39 | 1-102-965-00 | 270 | 1-102-980-00 | 0.0033 | 1-102-123-00 |
| 5 | 1-102-942-00 | 43 | 1-102-966-00 | 300 | 1-102-981-00 | 0.0039 | 1-102-124-00 |
| 6 | 1-102-943-00 | 47 | 1-101-880-00 | 330 | 1-102-820-00 | 0.0047 | 1-102-125-00 |
| 7 | 1-102-944-00 | 51 | 1-101-882-00 | 360 | 1-102-821-00 | 0.0056 | 1-102-126-00 |
| 8 | 1-102-945-00 | 56 | 1-101-884-00 | 390 | 1-102-822-00 | 0.0068 | 1-102-127-00 |
| 9 | 1-102-946-00 | 62 | 1-101-886-00 | 430 | 1-102-823-00 | 0.0082 | 1-102-128-00 |
| 10 | 1-102-947-00 | 68 | 1-101-888-00 | 470 | 1-102-824-00 | 0.01 | 1-102-129-00 |
| 11 | 1-102-948-00 | 75 | 1-101-890-00 | 510 | 1-101-059-00 | 0.022 | 1-101-005-00 |
| 12 | 1-102-949-00 | 82 | 1-102-971-00 | 560 | 1-102-115-00 | 0.047 | 1-101-006-00 |
| 13 | 1-102-950-00 | 91 | 1-102-972-00 | 680 | 1-102-116-00 | | |
| 15 | 1-102-951-00 | 100 | 1-102-973-00 | 820 | 1-102-117-00 | | |
| 16 | 1-102-952-00 | 110 | 1-102-815-00 | | | | |
| 18 | 1-102-953-00 | 120 | 1-102-816-00 | | | | |
| 20 | 1-102-958-00 | 130 | 1-101-081-00 | | | | |

0.001μF = 1,000pF

## CERAMIC (SEMICONDUCTOR) CAPACITORS Ⓐ

RATING → : Use the high voltage rated one.

| CAP. (μF) | 25 VOLT. PART No. | 50 VOLT. PART No. | CAP. (μF) | 25 VOLT. PART No. | 50 VOLT. PART No. |
|---|---|---|---|---|---|
| 0.001 | → | 1-161-039-00 | 0.018 | 1-161-016-00 | 1-161-054-00 |
| 0.0012 | → | 1-161-040-00 | 0.022 | 1-161-017-00 | 1-161-055-00 |
| 0.0015 | | 1-161-041-00 | 0.027 | 1-161-018-00 | 1-161-056-00 |
| 0.0018 | | 1-161-042-00 | 0.033 | 1-161-019-00 | 1-161-057-00 |
| 0.0022 | | 1-161-043-00 | 0.039 | 1-161-010-00 | 1-161-058-00 |
| 0.0027 | → | 1-161-044-00 | 0.047 | 1-161-021-00 | 1-161-059-00 |
| 0.0033 | → | 1-161-045-00 | 0.056 | → | 1-161-060-00 |
| 0.0039 | → | 1-161-046-00 | 0.068 | → | 1-161-061-00 |
| 0.0047 | → | 1-161-047-00 | 0.082 | 1-161-024-00 | 1-161-062-00 |
| 0.0056 | → | 1-161-048-00 | 0.1 | 1-161-025-00 | 1-161-063-00 |
| 0.0068 | → | 1-161-049-00 | | | |
| 0.0082 | 1-161-012-00 | 1-161-050-00 | | | |
| 0.01 | 1-161-013-00 | 1-161-051-00 | | | |
| 0.012 | → | 1-161-052-00 | | | |
| 0.015 | 1-161-015-00 | 1-161-053-00 | | | |



www.hifiengine.com

## 1/4 WATT CARBON RESISTORS Ⓐ

**Note:** Circled letter Ⓐ is applicable to European models only.

| Ω | Part No. | Ω | Part No. | Ω | Part No. | Ω | Part No. | Ω | Part No. | Ω | Part No. | Ω | Part No. |
|---|---|---|---|---|---|---|---|---|---|---|---|---|---|
| 1.0 | 1-246-401-00 | 10 | 1-246-425-00 | 100 | 1-246-449-00 | 1.0k | 1-246-473-00 | 10k | 1-246-497-00 | 100k | 1-246-521-00 | 1.0M | 1-246-545-00 |
| 1.1 | 1-246-402-00 | 11 | 1-246-426-00 | 110 | 1-246-450-00 | 1.1k | 1-246-474-00 | 11k | 1-246-498-00 | 110k | 1-246-522-00 | 1.1M | 1-210-814-00 |
| 1.2 | 1-246-403-00 | 12 | 1-246-427-00 | 120 | 1-246-451-00 | 1.2k | 1-246-475-00 | 12k | 1-246-499-00 | 120k | 1-246-523-00 | 1.2M | 1-210-815-00 |
| 1.3 | 1-246-404-00 | 13 | 1-246-428-00 | 130 | 1-246-452-00 | 1.3k | 1-246-576-00 | 13k | 1-246-500-00 | 130k | 1-246-524-00 | 1.3M | 1-210-816-00 |
| 1.5 | 1-246-405-00 | 15 | 1-246-429-00 | 150 | 1-246-453-00 | 1.5k | 1-246-577-00 | 15k | 1-246-501-00 | 150k | 1-246-525-00 | 1.5M | 1-210-817-00 |
| 1.6 | 1-246-406-00 | 16 | 1-246-430-00 | 160 | 1-246-454-00 | 1.6k | 1-246-578-00 | 16k | 1-246-502-00 | 160k | 1-246-526-00 | 1.6M | 1-210-818-00 |
| 1.8 | 1-246-407-00 | 18 | 1-246-431-00 | 180 | 1-246-455-00 | 1.8k | 1-246-579-00 | 18k | 1-246-503-00 | 180k | 1-246-527-00 | 1.8M | 1-210-819-00 |
| 2.0 | 1-246-408-00 | 20 | 1-246-432-00 | 200 | 1-246-456-00 | 2.0k | 1-246-580-00 | 20k | 1-246-504-00 | 200k | 1-246-528-00 | 2.0M | 1-210-820-00 |
| 2.2 | 1-246-409-00 | 22 | 1-246-433-00 | 220 | 1-246-457-00 | 2.2k | 1-246-581-00 | 22k | 1-246-505-00 | 220k | 1-246-529-00 | 2.2M | 1-210-821-00 |
| 2.4 | 1-246-410-00 | 24 | 1-246-434-00 | 240 | 1-246-458-00 | 2.4k | 1-246-582-00 | 24k | 1-246-506-00 | 240k | 1-246-530-00 | 2.4M | 1-244-754-00 |
| 2.7 | 1-246-411-00 | 27 | 1-246-435-00 | 270 | 1-246-459-00 | 2.7k | 1-246-583-00 | 27k | 1-246-507-00 | 270k | 1-246-531-00 | 2.7M | 1-244-755-00 |
| 3.0 | 1-246-412-00 | 30 | 1-246-436-00 | 300 | 1-246-460-00 | 3.0k | 1-246-584-00 | 30k | 1-246-508-00 | 300k | 1-246-532-00 | 3.0M | 1-244-756-00 |
| 3.3 | 1-246-413-00 | 33 | 1-246-437-00 | 330 | 1-246-461-00 | 3.3k | 1-246-585-00 | 33k | 1-246-509-00 | 330k | 1-246-533-00 | 3.3M | 1-244-757-00 |
| 3.6 | 1-246-414-00 | 36 | 1-246-438-00 | 360 | 1-246-462-00 | 3.6k | 1-246-586-00 | 36k | 1-246-510-00 | 360k | 1-246-534-00 | 3.6M | 1-244-758-00 |
| 3.9 | 1-246-415-00 | 39 | 1-246-439-00 | 390 | 1-246-463-00 | 3.9k | 1-246-587-00 | 39k | 1-246-511-00 | 390k | 1-246-535-00 | 3.9M | 1-244-759-00 |
| 4.3 | 1-246-416-00 | 43 | 1-246-440-00 | 430 | 1-246-464-00 | 4.3k | 1-246-488-00 | 43k | 1-246-512-00 | 430k | 1-246-536-00 | 4.3M | 1-244-760-00 |
| 4.7 | 1-246-417-00 | 47 | 1-246-441-00 | 470 | 1-246-465-00 | 4.7k | 1-246-489-00 | 47k | 1-246-513-00 | 470k | 1-246-537-00 | 4.7M | 1-244-761-00 |
| 5.1 | 1-246-418-00 | 51 | 1-246-442-00 | 510 | 1-246-466-00 | 5.1k | 1-246-490-00 | 51k | 1-246-514-00 | 510k | 1-246-538-00 | 5.1M | 1-244-762-00 |
| 5.6 | 1-246-419-00 | 56 | 1-246-443-00 | 560 | 1-246-467-00 | 5.6k | 1-246-491-00 | 56k | 1-246-515-00 | 560k | 1-246-539-00 | | |
| 6.2 | 1-246-420-00 | 62 | 1-246-444-00 | 620 | 1-246-468-00 | 6.2k | 1-246-492-00 | 62k | 1-246-516-00 | 620k | 1-246-540-00 | | |
| 6.8 | 1-246-421-00 | 68 | 1-246-445-00 | 680 | 1-246-469-00 | 6.8k | 1-246-493-00 | 68k | 1-246-517-00 | 680k | 1-246-541-00 | | |
| 7.5 | 1-246-422-00 | 75 | 1-246-446-00 | 750 | 1-246-470-00 | 7.5k | 1-246-494-00 | 75k | 1-246-518-00 | 750k | 1-246-542-00 | | |
| 8.2 | 1-246-423-00 | 82 | 1-246-447-00 | 820 | 1-246-471-00 | 8.2k | 1-246-495-00 | 82k | 1-246-519-00 | 820k | 1-246-543-00 | | |
| 9.1 | 1-246-424-00 | 91 | 1-246-448-00 | 910 | 1-246-472-00 | 9.1k | 1-246-496-00 | 91k | 1-246-520-00 | 910k | 1-246-544-00 | | |

## HARDWARE NOMENCLATURE

**Screw:** – P 3 x 10

- *L: Length in mm*
- *D: Diameter in mm*
- *Type of head*
- *Indicated slotted-head only. Unless otherwise indicated, it means cross-recessed head (Phillips type).*

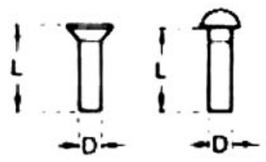


**Nut, Washer, Retaining ring:** N 3

- *Diameter of usable screw or shaft*
- *Reference designation*

| Reference Designation | Shape | Description | Remarks |
|---|---|---|---|
| | | **SCREWS** | |
| P | | pan-head screw | binding-head (B) screw for replacement |
| PWH | | pan-head screw with washer face | binding-head (B) screw and flat washer for replacement |
| PS<br>PSP | | pan-head screw with spring washer | binding-head (B) screw and spring washer for replacement |
| PSW<br>PSPW | | pan-head screw with spring and flat washers | binding-head (B) screw and spring and flat washers for replacement |
| R | | round-head screw | binding-head (B) screw for replacement |
| K | | flat-countersunk-head screw | |
| RK | | oval-countersunk-head screw | |
| B | | binding-head screw | |
| T | | truss-head screw | binding-head (B) screw for replacement |
| F | | flat-fillister-head screw | |
| RF | | fillister-head screw | |
| BV | | brazer-head screw | |

| Reference Designation | Shape | Description | Remarks |
|---|---|---|---|
| | | **SELF-TAPPING SCREWS** | |
| TA | | self-tapping screw | ex: TA, P 3 x 10 |
| PTP | | pan-head self-tapping screw | binding-head self-tapping (TA, B) screw for replacement |
| PTPWH | | pan-head self-tapping screw with washer face | binding-head self tapping (TA, B) screw and flat washer for replacement |
| PTTWH | | pan-head thread-rolling screw with washer face | binding-head (B) screw and flat washer for replacement |
| | | **SET SCREWS** | |
| SC | | set screw | |
| SC | | hexagon-socket set screw | ex: SC 2.6 x 4, hexagon socket |
| | | **NUT** | |
| N | | nut | |
| | | **WASHERS** | |
| W | | flat washer | |
| SW | | spring washer | |
| LW | | internal-tooth lock washer | ex: LW3, internal |
| LW | | external-tooth lock washer | ex: LW3, external |
| | | **RETAINING RINGS** | |
| E | | retaining ring | |
| G | | grip-type retaining ring | |


9-954-774-02

79I0478-1
Printed in Japan





www.hifiengine.com