# TC-K77R



AEP Model
UK Model
E Model
US Model


'Dolby' and the double-D symbol are the trade marks of Dolby Laboratories. Noise reduction system manufactured under license from Dolby Laboratories.

## STEREO CASSETTE DECK

### SPECIFICATIONS

**Power Requirements:** 110, 120, 220 or 240 V ac adjustable, 50/60 Hz (AEP, E, UK model)
120 V ac, 60 Hz (US model)

**Power Consumption:** 38 W (AEP, E, UK model)
35 W (US model)

**AC Outlet:** Unswitched 300 W

**Dimensions:** Approx. 430 (w) x 155 (h) x 325 (d) mm
17 (w) x 6 1/8 (h) x 12 7/8 (d) inches
including projecting parts and controls

**Weight:** Approx. 8.3 kg, 18 lb 5 oz

**Recording System:** 4-track 2-channel stereo

**Fast-forward and Rewind Time:** Approx. 90 sec. (with Sony C-60 cassette)

**Frequency Response:** DOLBY NR OFF
- With TYPE IV cassette (Sony METALLIC)
  20 – 19,000 Hz
  30 – 17,000 Hz (±3 dB)
  30 – 13,000 Hz (±3 dB, 0 VU recording)
  30 – 17,000 Hz (DIN)
- With TYPE III cassette (Sony Fe-Cr)
  20 – 19,000 Hz
  30 – 17,000 Hz (±3 dB)
- With TYPE II cassette (Sony CD-α)
  20 – 18,000 Hz
  30 – 16,000 Hz (±3 dB)
  30 – 16,000 Hz (DIN)
- With TYPE I cassette (Sony BHF)
  20 – 17,000 Hz
  30 – 15,000 Hz (DIN)

**Wow and Flutter:** 0.05 % WRMS (NAB)
±0.14 % (DIN)

**S/N Ratio:** DOLBY NR OFF
- With TYPE IV cassette (Sony METALLIC)
  59 dB at peak level (NAB)
  59 dB (DIN)
- With TYPE III cassette (Sony Fe-Cr)
  59 dB (NAB)
  59 dB (DIN, 1975 rev.)
- With TYPE II cassette (Sony CD-α)
  57 dB (NAB)

DOLBY NR ON
Improved by 5 dB at 1 kHz,
10 dB above 5 kHz

**Total Harmonic Distortion:** 1.0 % (with Sony METALLIC and Fe-Cr cassettes)

**Record Bias Frequency:** 105 kHz

– Continued on page 2 –

SAFETY-RELATED COMPONENT WARNING!!

COMPONENTS IDENTIFIED BY SHADING AND MARK ⚠ ON THE SCHEMATIC DIAGRAMS, EXPLODED VIEWS AND IN THE PARTS LIST ARE CRITICAL TO SAFE OPERATION. REPLACE THESE COMPONENTS WITH SONY PARTS WHOSE PART NUMBERS APPEAR AS SHOWN IN THIS MANUAL OR IN SUPPLEMENTS PUBLISHED BY SONY.

SONY®
SERVICE MANUAL

**Inputs:** MIC (two phone jacks)
sensitivity 0.25 mV (−70 dB) for a low-impedance microphone
LINE IN (two phono jacks)
sensitivity 77.5 mV (−20 dB)
input impedance 50 kΩ

**Outputs:** LINE OUT (VARIABLE) (two phono jacks)
maximum output level 0.435 V (−5 dB) at a load impedance of 50 kΩ with LINE OUT switch set to "0", variable in five steps from 0.435 V (−5 dB) to 27 mV (−29 dB)
LINE OUT (FIXED) (two phono jacks)
output level 0.435 V (−5 dB) at load impedance of 50 kΩ
suitable load impedance more than 10 kΩ
HEADPHONES (stereo-binaural)
output level
variable in five steps from 77 mV (−20 dB) to 4.9 mV (−44 dB) at a load impedance of 8 Ω

**LED Peak Program Meters:** Response range
−40 dB to +8 dB
Frequency response
20 – 20,000 Hz ± 1.5 dB
Response time
1 millisecond
Decay time (from 0 dB to −20 dB)
750 milliseconds
Overshoot
none
Indicator elements
16 elements for each channel

**0 dB = 0.775 V**

---

**Model Identification (Specification Labels)**

**US model**

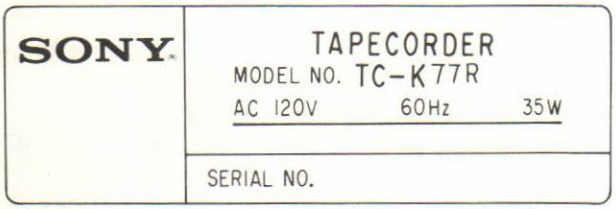


**AEP, E, UK model**

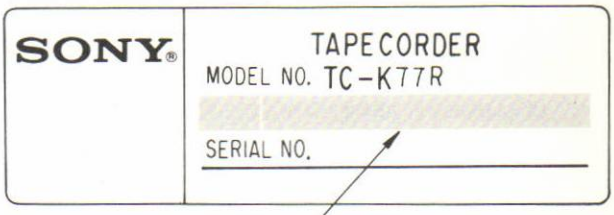


AEP, E, UK: AC 110, 120, 220, 240 V ~ 50/60 Hz 38 W

— Power Cord —

**euro-plug (1-551-530-00)**

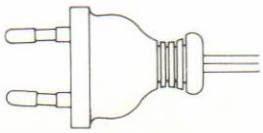

**parallel-blade plug (1-534-986-XX)**

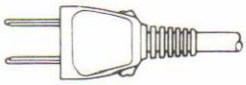

# SERVICING NOTES

## Handling Precautions for MOS ICs

Generally, the insulation resistance of the oxide layer in MOS IC structures is very high, and the oxide layer is very thin. Because of this, it is possible that the static voltages usually present on clothes and the human body will be enough to generate a potential difference across the insulator, high enough to cause a breakdown of the insulating layer.

The following precautions should be taken while handling these ICs.

(Particular care should be taken under conditions of low humidity.)

### Precautions in Replacing MOS ICs

1. Store new ICs by inserting them into a urethane-polyester cushion (which is somewhat conductive), or wrapping it in aluminum foil, so that all the pins are at the same potential.
   (The ICs should be stored in that manner until mounted on the circuit board.)

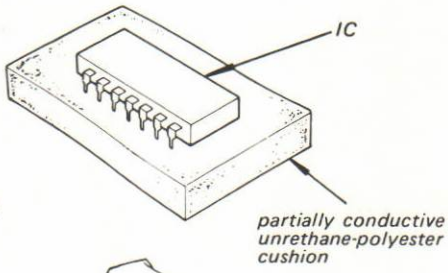


Fig. A

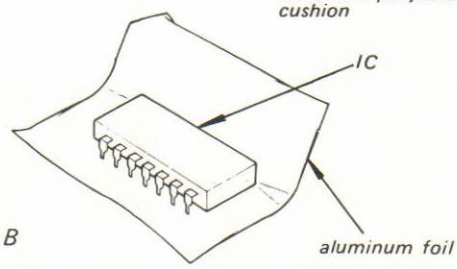


Fig. B

2. Check the soldering iron for possible power-line leakage current. Make sure that there is no leakage path by connecting an ohmmeter to the tip of the soldering iron and the plug as shown in Fig. C. If there is a leakage path, use some other soldering iron.

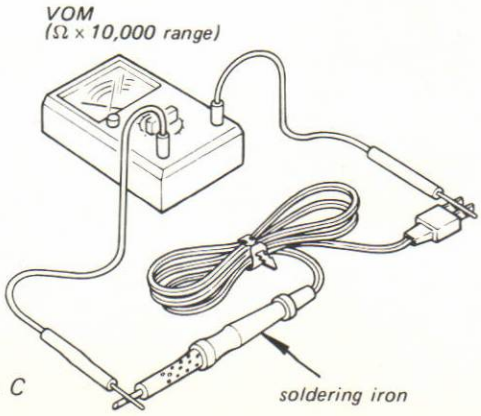


Fig. C

3. Equalize any potential difference between the clothes, the tools in use, the work bench, the set being worked on, and the packaged IC by touching them all in succession with the hands or a conductive wire or tool.
4. The following are effective methods for handling ICs that remove the potential difference across the oxide layer.
   - Use a paper clip modified by soldering in a wire braid insert.

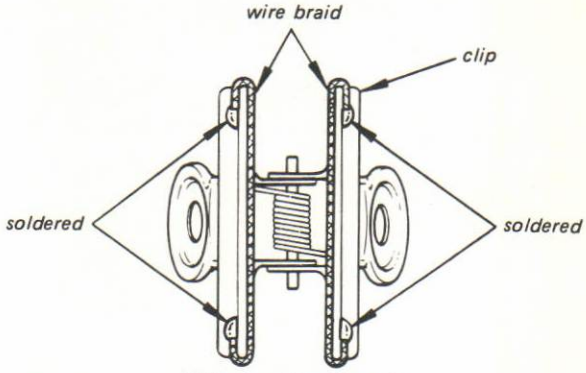


Fig. D Make sure that there is no solder on the inside.

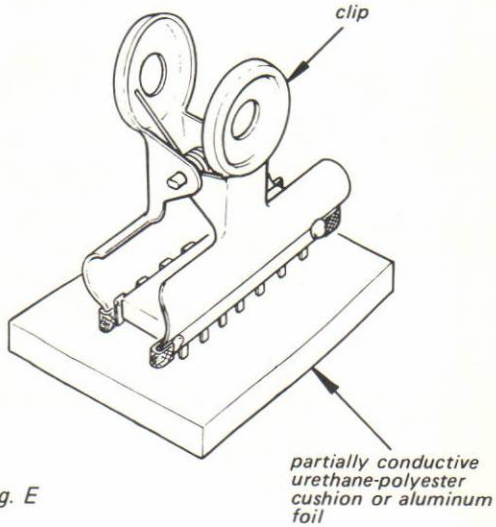


Fig. E

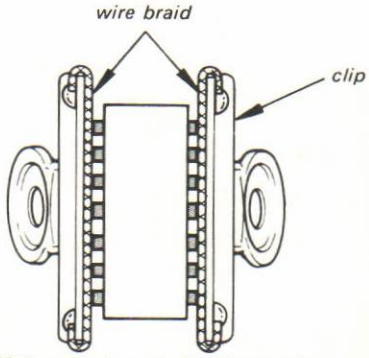


Fig. F Make sure that all the pins are in contact with the wire braid (all the pins will then be at the same potential.).

- Take a short length of fine bare wire and wind it around the IC so that it shorts all the pins of the IC, while it is still in the urethane-polyester cushion or aluminum foil. This ensures that all the pins are at the same potential.

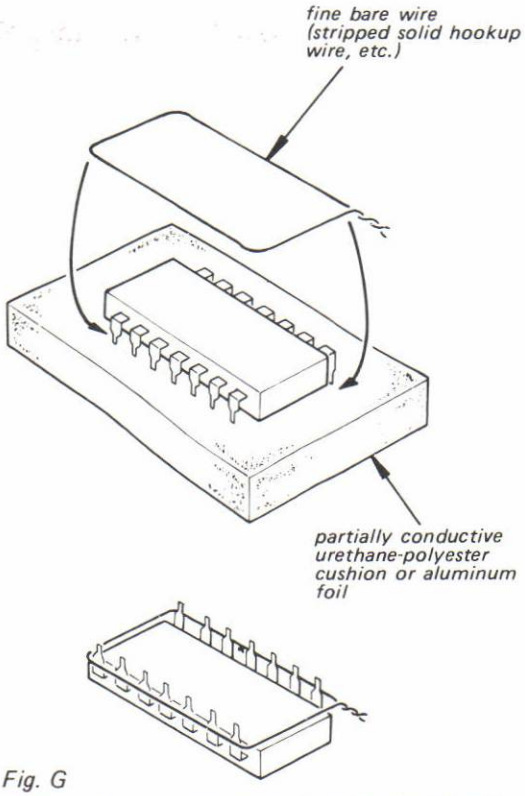


*Fig. G*

- When it is necessary to handle the IC with the fingers, do not touch any pin, and hold the IC at the ends of its plastic-package case as shown in Fig. H.

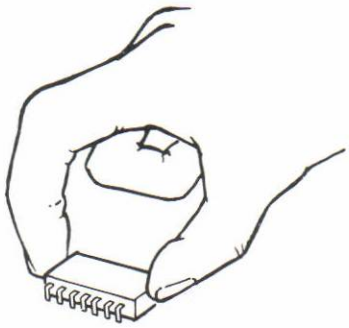

*Fig. H*

5. Method of Mounting
   Insert the IC while holding it with the modified clip, and solder all the pins with the clip still shorting the pins. (Similarly, solder all the pins while the bare shorting wire is still wound around them.). Remove the clip or the bare shorting wire only after all the pins have been soldered.

**Precaution while Checking C-MOS ICs**

The C-MOS ICs (Complementary MOS) are MOS ICs that have their output sections made up of N-channel and P-channel push-pull stages to increase their speed of operation. If the output terminal of these ICs comes into contact with B+ or B– voltage, then the FET which is ON at that time will either become shorted or open.

This is valid for all the output sections that are connected together by the interconnections. Even the circuits that are physically separated (and not on the same board) can be destroyed simultaneously.

**Example:**

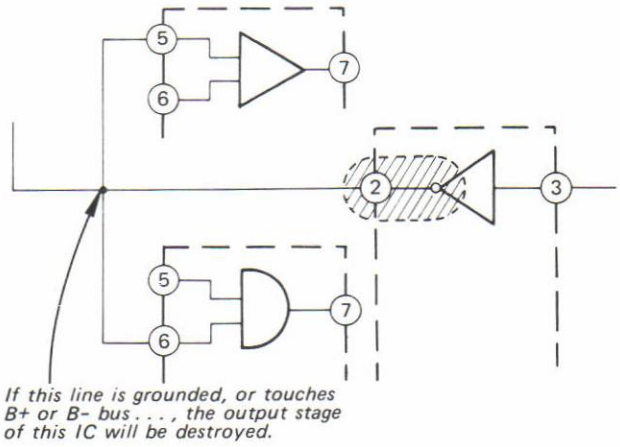


*Fig. I*

## ON THE ONE-CHIP CPU

This set uses a one-chip CPU (IC601) which is written with a private and non-volatile programs. When ordering this IC, be sure to use its exclusive part number and preferably provide the name of it as follows.

IC601: "μPD547C-074"
Part No.; 8-759-147-74

## ON THE MOTOR

This set uses a dc-servo motor and no power-line frequency adaptation in needed (free from power-line frequency).

# SECTION 1
# OUTLINE

## 1-1. BLOCK DIAGRAMS

### (1) Amp Section

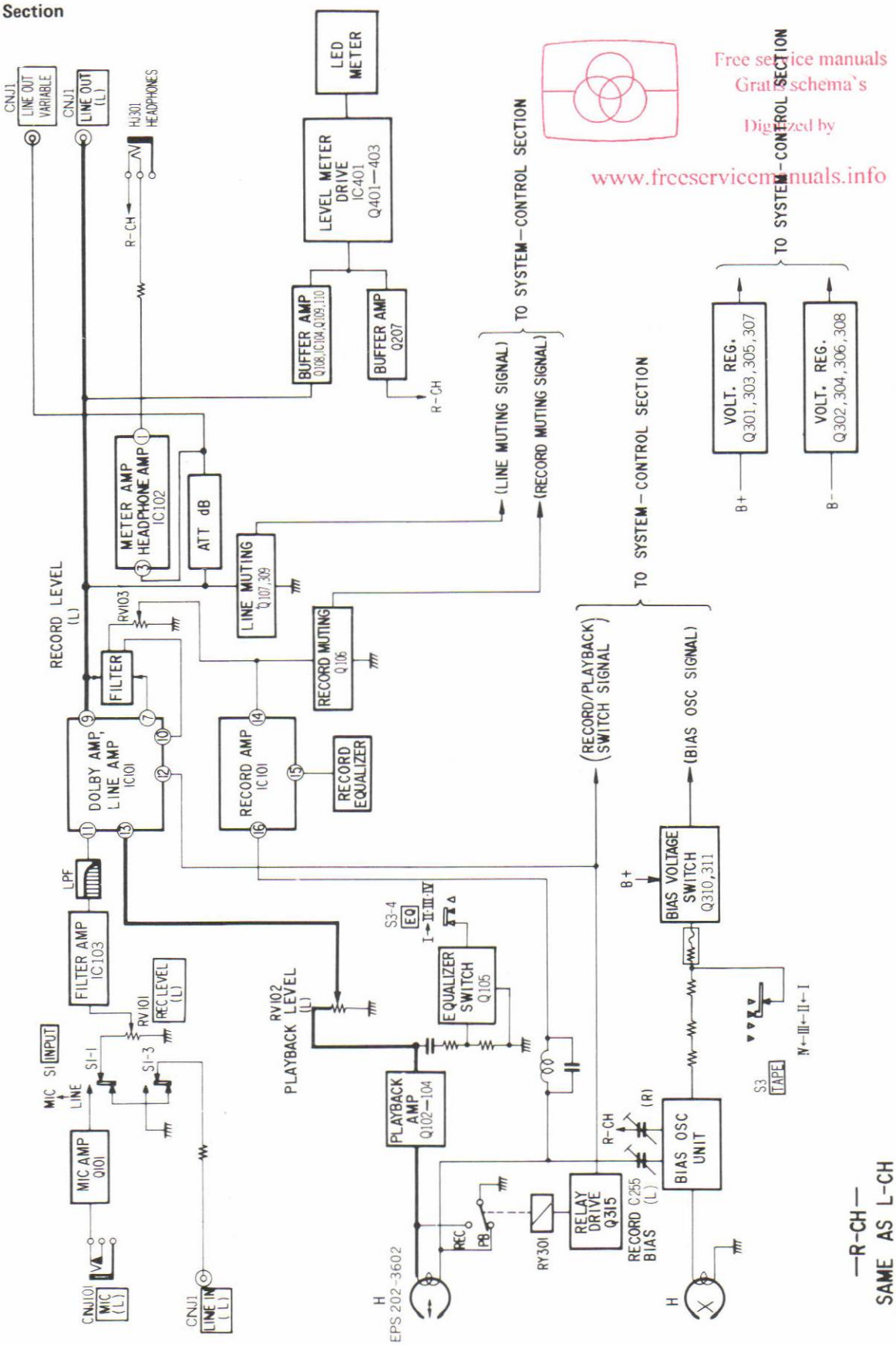

(2) System-Control Section

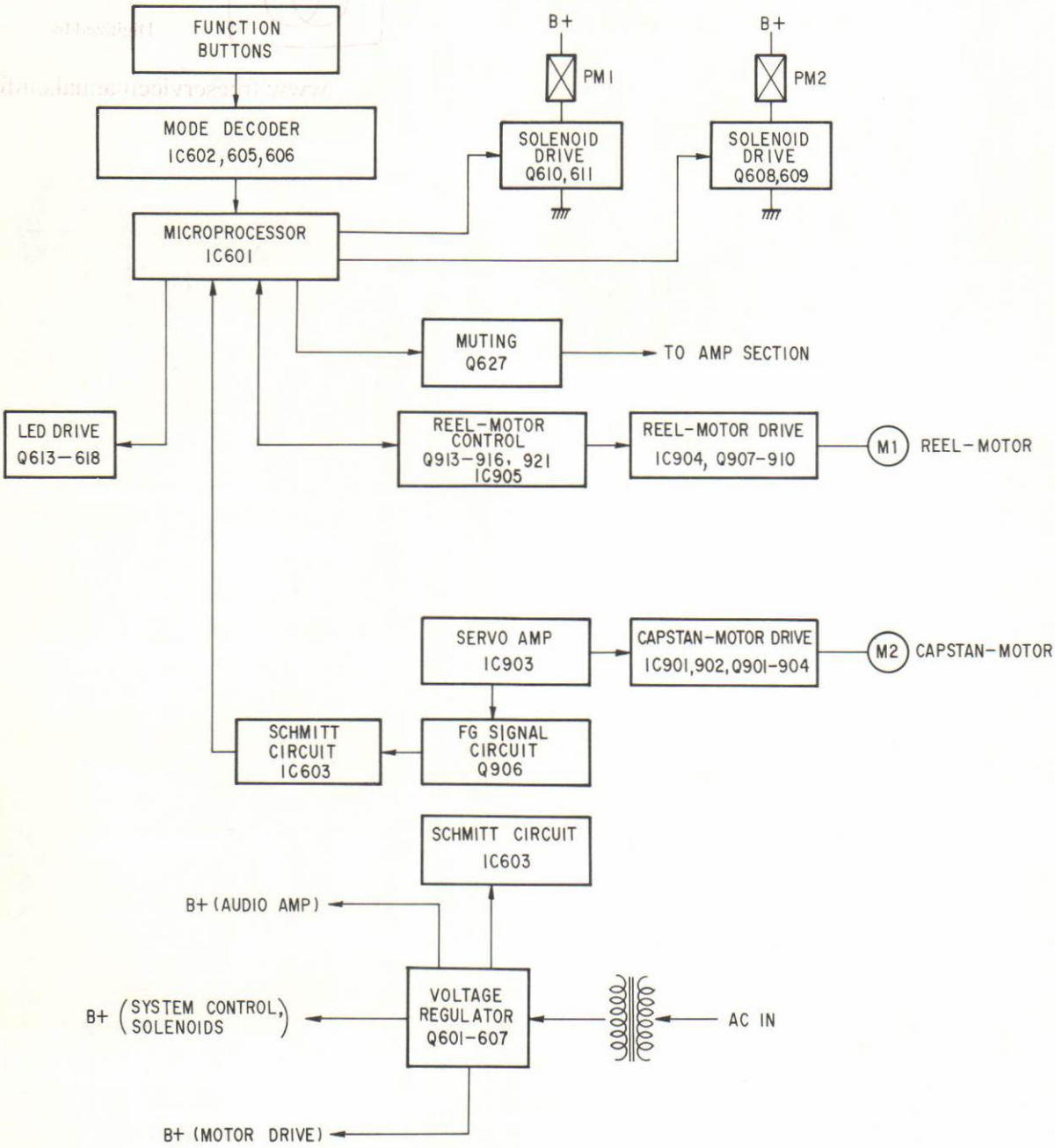

## 1-2. GENERAL DESCRIPTION

# FEATURES

**Auto reverse and auto repeat**
Continuous recording or playback of both sides of the cassette are possible without turning the cassette over. It is also possible to set the cassette deck to play back both sides of a cassette five consecutive times.
The heads reverse quickly just before the leader tape passes them. Head reversal is triggered by the difference in light transmission between the opaque magnetic tape and the transparent leader tape, which is detected by an optical detector.
You can now record braodcast programs of 60 or 90 minutes duration with a timer with minimum interruption.

**Roto-bilateral S & F record/playback and erase heads**
The S & F (Sendust and Ferrite) record/playback head combines the best features of sendust and ferrite heads to provide a wider dynamic range and an extended frequency response, especially at the higher frequencies. This very durable head is capable of taking full advantage of the new metal tapes.
In the auto reverse operation the record/playback head and the erase head reverse positions so that the cassette does not have to be turned over to play the other side. These roto-bilateral heads assure the same performance characteristics in either tape transport direction.

**Two linear BSL motors**
The capstan and the reels are driven by separate linear BSL (brushless and slotless) motors for accurate and stable tape transport and very smooth torque.

**LED peak program meters**
The peak meters employ 32 separate LED elements that respond instantly to transient signal peaks over a wide dynamic range of from −40 dB to +8 dB, and so are suitable even for extended dynamic range metal tapes. An automatic and manual peak-hold function makes the meters easy to read.

**Logic-controlled function buttons**
"Feather-touch" function buttons controlled by a microcomputer can switch the unit directly from one mode to another. By pressing either the forward or the reverse button and either the fast-forward or the fast-reverse button simultaneously, the cassette deck can be programmed to play back in various patterns.
You can use the record muting button to insert a four second blank space between selections.

**Remote control operation**
Using the optional RM-70 remote control unit, various operations—recording, playback, record muting operation, etc.—can be remotely controlled.

# PRECAUTIONS

- If the cassette holder is not closed completely, the function buttons will not operate.
- Before turning on the POWER switch, check to see that the timer switch is set at OFF. If the power is turned on with this switch set to the REC position, previously recorded material may be erased. The REC and PLAY positions should be used only for timer-activated operation.

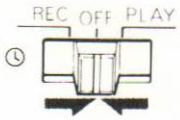


**On cassettes**
Before inserting a cassette, take up any slack in the tape to prevent it from becoming tangled around the capstan.

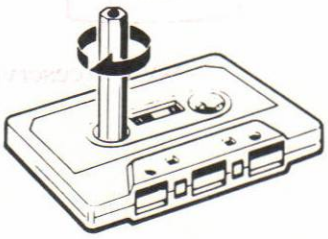

## FUNCTION OF CONTROLS

The numbers in the photo are keyed to the following explanations which are took from the instruction manual. Important parts are shown by brown overprints.

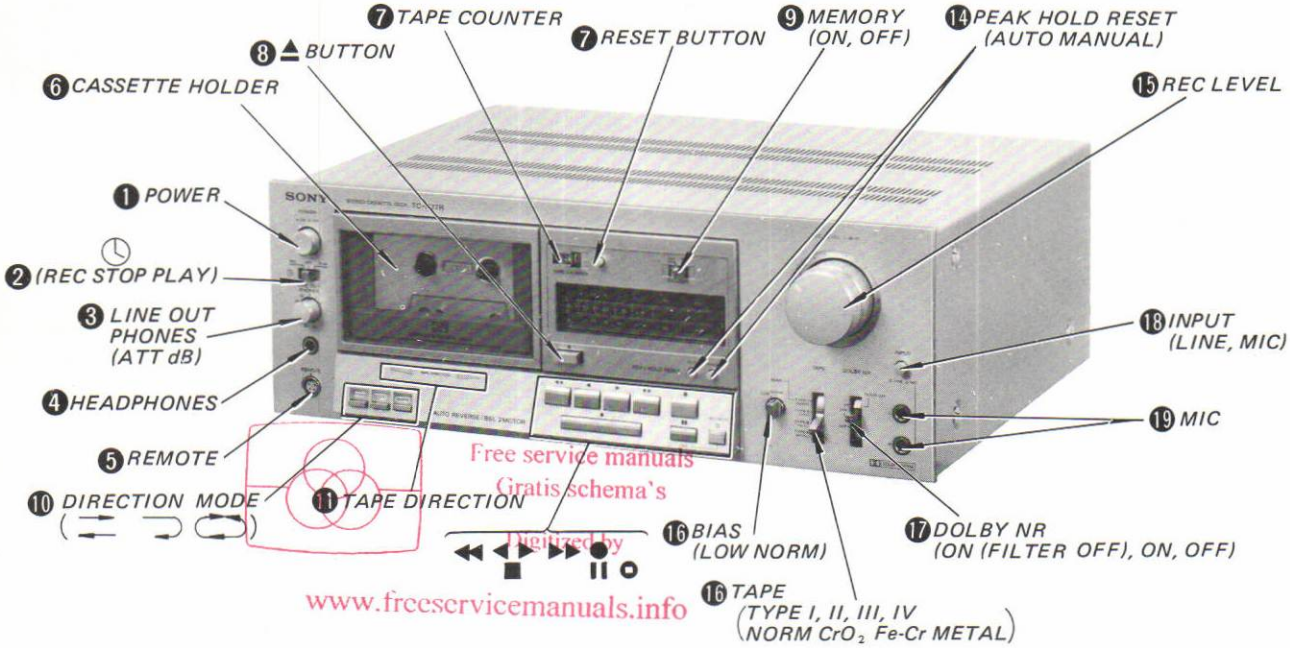



**❶ POWER Switch**
This turns the power on or off. When the unit is turned on, the TAPE DIRECTION indicator iights up and the casssette holder, a DIRECTION MODE select button and the peak program meters illuminate. The pause button indicator blinks on and off for about four seconds after the power switch is turned on. The unit is not operational until the pause button indicator stops blinking.

**❷ Timer Switch [◷]**
You can set the unit to record or play back at a predetermined time by connecting any commercially available timer. To record, set this timer switch to REC. To playback, set it to PLAY.

**❸LINE OUT/PHONES Level Control**
This control governs the output level of the VARIABLE LINE OUT jacks as well as the headphone level. At the "0" position, the output level of the VARIABLE LINE OUT jacks is rated at 0.435 V and the headphone level is rated 77.5 mV (at a load impedance of 8 ohms).
When this control is set to the "3" position, the level is reduced by 3 dB, and by setting it to "6," "12," or "24," the level is reduced by that amount, i.e., by 6 dB, 12 dB, or 24 dB, from the rated output obtained at the "0" position.
These settings do not affect the peak program meters or the output level of the FIXED LINE OUT jacks.

**❹HEADPHONES Jack**
Headphones may be inserted either to monitor the input signals to be recorded or to listen to a recording in the playback mode.
Headphone volume is adjustable with the LINE OUT/PHONES level control.

**❺ REMOTE Control Connector**
Connect the optional RM-70 remote control unit (cable length 5 m) to operate the tape transport functions from a distance. The tape deck function buttons are still operative when the remote control unit is connected.

**❻ Cassette Holder**

**❼ TAPE COUNTER and Reset Button**
The tape counter provides a numerical reference point while recording which can be used to index a recorded cassette. To reset to zero, press the reset button.

**❽ Eject Button [⏏]**
Press this button to open the cassette holder.

**❾ MEMORY Switch**
Use the MEMORY switch to locate a particular point on the tape easily and quickly. At the ON position, the tape deck can be set to stop when the cassette is rewound to "999" on the tape counter, and, if the forward and rewind buttons have also been pressed, set to begin playback automatically from that point.

**⑩ DIRECTION MODE Select Buttons**

Press one of these three buttons to select the tape direction and mode while recording or playing back.

One way button [⇄]: To record or play back only one side of a cassette.

Single cycle button [⊃]: To record or play back both sides of a cassette by starting to record or play back towards the right. If you start recording or playback towards the left, the tape motion stops at the end of that side.

Five cycle button [⊂⊃]: To play back both sides of a cassette five times. In recording, the operation is the same as when the single cycle button is pressed.

**⑪ TAPE DIRECTION Indicator**

When the power is turned on, the indicator illuminates to show the direction of tape transport. To change the direction, press the ▶ or ◀ button.

**⑫ Function Buttons**

It is possible to switch directly from one mode to another.

When a button (except the stop button and the record muting button) is pressed, the corresponding indicator will light up.

Fast-reverse button [◀◀]: Press this button to advance the tape rapidly to the left.

Reverse button [◀]: Press this button to play back to the left. For recording, press this button while holding the record button down. If pressed together with the fast-reverse [◀◀] or the fast-forward [▶▶] button, auto play or memory play is possible.

Forward button [▶]: Press this button for playback to the right. For recording, press this button while holding the record button down. If pressed together with the ◀◀ or ▶▶ button, auto play or memory play is possible.

Fast-forward button [▶▶]: Press this button to advance the tape rapidly to the right.

Record button [●]: Press this button before adjusting the recording level. The indicators of the forward and reverse buttons flicker to indicate that the safety tab on the cassette has been detected and that recording is possible in that direction. If the tab has been removed, the indicator of that forward (or reverse) button does not flicker. To start recording, press the forward (or reverse) button while holding this button down.

Stop button [■]: Press this button to stop the tape.

Pause button [❚❚]: To pause for a moment during recording or playback, press this button. To restart, press it again.
This button is also used to control more precisely the start of recording and to release the record muting mode. When the power switch is turned on, the indicator of this button flickers for about four seconds, during which time no function button will work. After about four seconds, the indicator goes off and the function buttons become operative.

Record muting button [REC MUTE ○]: Press this button to eliminate unwanted material and to insert a blank space during recording. The tape will automatically stop after four seconds. To insert a blank less than four seconds, press this button, then press the pause button to release the record muting mode. To insert a blank more than four seconds long, hold this button down for as long as you want the blank to be. Press the pause button to resume recording.

**⑬ LED Peak Program Meters**

These meters show the peak input level of each channel during recording, and recorded levels in the playback mode. They follow the transient peaks of high-level inputs that are too brief to be followed by conventional VU meters so that the optimum recording level can be accurately set. The highest input of each channel is held on the scale so that they can be easily read.

**⑭ PEAK HOLD RESET Buttons**

You can choose either of two ways to have the peak level indicated:

- When the **AUTO** button is pressed down, successive peaks are held for about 2.5 seconds, except when a higher peak occurs before 2.5 seconds have passed, in which case that peak is immediately indicated.
- When the non-locking **MANUAL** button is pressed, the peak level will be held on the scale until a higher peak occurs, when that peak will be held. To reset the peak held on the meter, just press this button. You will find this method of indicating the peak input useful when you want to know the highest peak of a tape or disc, or when you want to know both the highest peak as well as the intermittent input levels during live recording.

**⑮ Recording Level Controls [REC LEVEL]**

These controls adjust the recording level. The inner knob is for the right channel and the outer for the left channel. To adjust the level of the right or left channel only, turn the appropriate knob while holding the other knob.

**⑯ TAPE Select Switch and BIAS Switch**

Set the TAPE select switch according to the type of tape to be used. When this switch is set to the appropriate position, the optimum equalization and bias current settings are obtained for recording, and the optimum equalization setting is obtained for playback. When recording using a TYPE I (normal) tape, select either the NORM or the LOW position of the BIAS switch. For the recommended settings of the TAPE select switch and the BIAS switch for typical commercially available cassettes, see "Tape select switch recommended settings".

**⑰ DOLBY NR Switch**

When recording FM stereo broadcasts with the Dolby NR* (Noise Reduction) process, set this switch to the center (ON) position.

When recording programs other than FM stereo broadcasts, set this switch to the upper (ON-FILTER OFF)** position. For recording without the Dolby NR process, set this switch to the lower (OFF) position.

When playing back, set this switch to the same position used in recording. For playback of the Dolby NR processed tape, either of the ON positions (FILTER OFF or ON) can be used.

* The Dolby NR system reduces tape hiss and improves the signal-to-noise ratio. During recording, low-level high-frequency signals, which tend to be obscured by tape hiss, are boosted so that they are audible above any tape noise. When these signals are played back, the level is lowered to the original input level so that the level of any tape noise is reduced to the same extent.

** The 19 kHz pilot signal and the 38 kHz subcarrier are carried on FM broadcasts. With the DOLBY NR switch in the center ON position, the multiplex filter eliminates these signals, which otherwise might reduce the effectiveness of the Dolby system. To record programs other than FM broadcasts, disconnect the multiplex filter circuit by setting the DOLBY NR switch to the FILTER OFF position.

"Dolby" and the double-D symbol are trade marks of the Dolby Laboratories. Noise reduction system manufactured under license from Dolby Laboratories.

**⑱ INPUT Select Switch**

To record through the MIC jacks, depress this switch until it locks [▭]. To record through the LINE IN jacks, depress this switch again so that it is released [□].

**⑲ MIC Jacks**

Any low-impedance microphone equipped with a phone plug may be used. If your microphone is equipped with a mini plug, you will need a plug adaptor.

**LINE OUT Jacks**

Either the FIXED or VARIABLE LINE OUT jacks can be used.

FIXED: The output level from these jacks is fixed regardless of the setting of the LINE OUT/PHONES level control.

VARIABLE: The output level from these jacks can be adjusted by the LINE OUT/PHONES level control. We recommend that you use these jacks when you want to match the output level of the tape deck with that of any other equipement connected to the amplifier.

# RECORDING

## PREPARATION

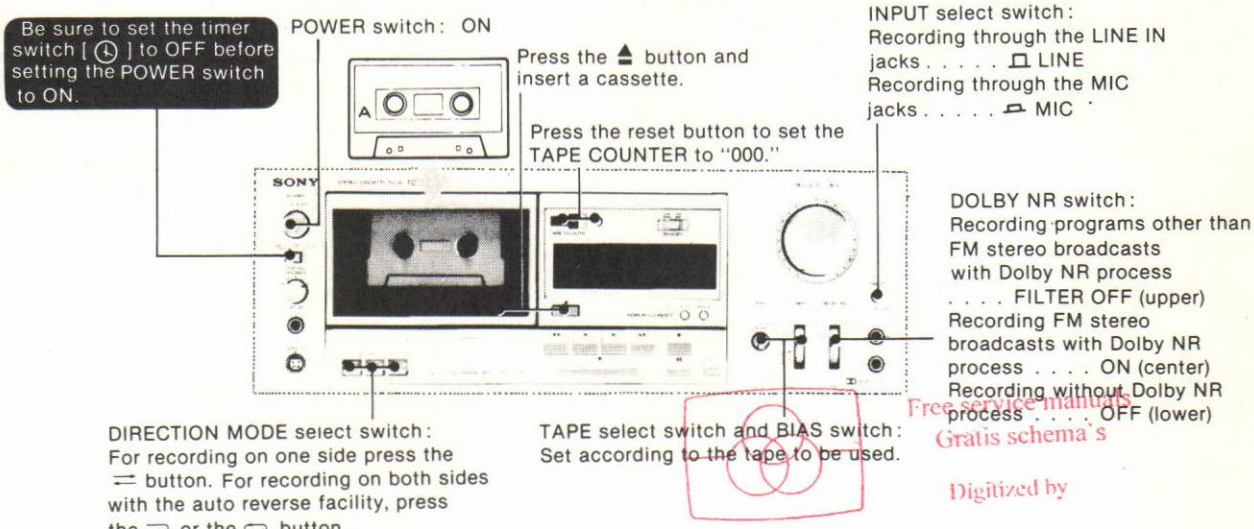




## TO RECORD

Press the ● button.
The indicators of the forward and reverse buttons will flicker to show that recording is possible in that direction.*

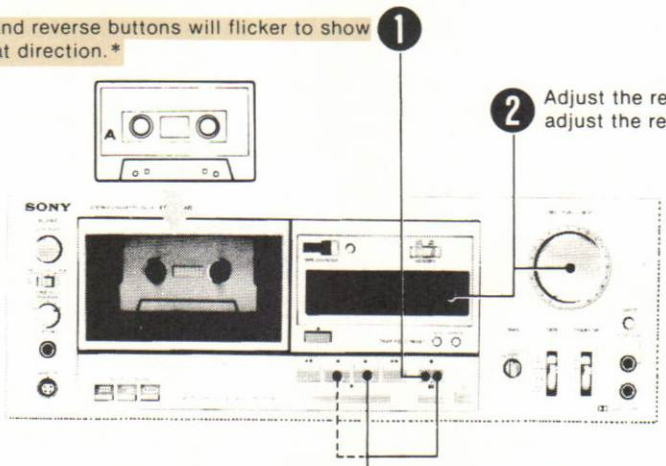


For example: When the cassette is inserted with side A out:
—to record on side A, press the forward button [ ▶ ] while holding down the record button [ ● ].
—to record on side B, press the reverse button [ ◀ ] while holding down the record button [ ● ].
—to record on both sides press the forward button [ ▶ ] while holding down the record button [ ● ].

* If the cassette's safety tab has been removed, the forward (or reverse) button's indicator will not flicker and recording in that direction cannot be made unless the tab slot is covered with plastic tape.

### TAPE SELECT SWITCH RECOMMENDED SETTINGS

The following recommended settings have been determined by critical listening tests and measurements of the electrical characteristics of commercially available cassettes. While these settings are optimum for Sony cassettes, you may want to change these settings when using cassettes produced by other manufacturers.

| Tapes (C-60 and C-90) | | TAPE | |
|---|---|---|---|
| AMPEX : 371 PLUS<br>FUJI : FL<br>TDK : D | BASF : PERFORMANCE<br>SCOTCH : DYNARANGE | BIAS LOW | TYPE I (NORM) |
| **SONY : SHF, HFX, LNX**<br>BASF : PROFESSIONAL I<br>MAXELL : LN, UD, UD-XL I<br>SCOTCH : MASTER I | AMPEX : GRAND MASTER I<br>FUJI : FX-I<br>MEMOREX : $MRX_2$<br>TDK : AD | BIAS NORM | |
| **SONY : EHF**<br>BASF : PROFESSIONAL II<br>MAXELL : UD-XL II<br>SCOTCH : MASTER II | AMPEX : GRAND MASTER II<br>FUJI : FX-II<br>MEMOREX : $CrO_2$<br>TDK : SA | | TYPE II ($CrO_2$) |
| **SONY : FeCr**<br>SCOTCH : MASTER III | BASF : PROFESSIONAL III<br>PHILIPS : FERRO CHROMIUM | | TYPE III (Fe-Cr) |
| **SONY : METALLIC** | Other metal tapes | | TYPE IV (METAL) |

### TO RECORD MATERIAL ONTO A SPECIFIC PORTION OF TAPE

When you want to re-record a specific portion of tape or to insert new material between two points on a tape you will find it handy to be able to change directly from the playback to the record mode by pressing the record button while holding the forward (or reverse) button down.

## AUTO PLAY

With the MEMORY switch set at the OFF position, you can initiate auto play so that the tape plays back from the beginning immediately after rewinding. Simply press either the fast-reverse [ ◀◀ ] or the fast-forward [ ▶▶ ] button and either the forward [ ▶ ] or the reverse [ ◀ ] button simultaneously. The tape will rewind rapidly, the rewinding mode will disengage, and playback will automatically begin.

For example, if you insert the cassette with side A facing out :

—press the ▶ button together with the ◀◀ button to play back side A of the cassette.

—press the ◀ button together with the ▶▶ button to play back side B of the cassette.

Depending on which DIRECTION MODE select button has been pressed, auto reverse or auto repeat function is also possible after auto play operation.

| DIRECTION MODE Switch | In Record Mode | In Playback Mode |
|---|---|---|
| → ← | One-side recording depending on the button either ▶ or ◀ . | One-side playback depending on the button either ▶ or ◀ . |
| ⊃ | Both-sides recording when ▶ button is depressed.<br>One-side recording when ◀ button is depressed. | Both-sides playback when ▶ button is depressed.<br>One-side playback when ◀ button is depressed. |
| ⊂⊃ | Same as in the usage of ⊃ button.<br>Both-sides recording when ▶ button is depressed. | Five-times playback |

## MEMORY STOP AND MEMORY PLAY

Use the MEMORY switch to quickly locate a particular point on the tape.
At the desired point on the tape press the reset button to turn the tape counter to "000," and play back or record on the tape.
Then, set the MEMORY switch to ON and locate the "000" point in the following ways. Let us assume that side A of the cassette is facing out.

**Memory Stop**
If the point you want to locate is on side A, press the ◀◀ button to rewind the tape to the "000" point, or press the ▶▶ button to advance the tape rapidly to the "000" point.
If the point you want to locate is on side B, the ▶▶ button will rewind the tape to the "000" point and the ◀◀ button will advance it to the "000" point.
This operation is called "Memory Stop."

**Memory Play**
There are various kinds of "Memory Play," all initiated by pressing either the ▶ or ◀ button simultaneously with either the ◀◀ or ▶▶ button.

## ERASING

When the tape deck functions in recording mode, the erase head automatically erases any previously recorded material.
To erase without recording :
❶ Make sure that the safety tab of the cassette is in place, or that the tab slot is covered with plastic tape.
❷ Set the REC LEVEL controls fully to "0." (Disconnecting all inputs will provide a more complete erasure.)
❸ Set the TAPE switch according to the type of tape to be erased. (The TYPE IV position assures a good erasure for any type of tape.)
❹ Set the DIRECTION MODE select buttons.
To erase both sides at a time . . . . press the button.
To erase only one side . . . . press the button.
❺ While holding the record button [●] down, press the forward button [▶].



| On which side is the point to locate? | Memory play operation | Function buttons | Tape path (Fast-forward and fast-reverse / Playback) |
|---|---|---|---|
| On side A | Rewinding the tape to the "000" point and auto play of side A from "000." | ◀◀ ◁ ▶ ▷▷ | TAPE COUNTER "000" |
| | Winding the tape rapidly to the "000" point and auto play of side A from "000." | ◁◁ ◁ ▶ ▶▶ | |
| On side B | Rewinding the tape to the "000" point and auto play of side B from "000." | ◁◁ ◀ ▷ ▶▶ | |
| | Winding the tape rapidly to the "000" point and auto play of side B from "000." | ◀◀ ◀ ▷ ▷▷ | TAPE COUNTER "000" |

**Notes**
● During Memory Stop and Memory Play by pressing the ◀◀ button, the tape actually stops at the tape counter "999."
● To wind or rewind the tape rapidly further than the "000" point, press the ▶▶ button or the ◀◀ button again.
● If you keep the ▶▶ button or the ◀◀ button down while the tape rewinds past "000," the tape will not stop (or will not replay) at that point.

## TIMER-ACTIVATED RECORDING AND PLAYBACK

By connecting any commercially available timer to this tape deck, the deck can be set to play back or record automatically at any desired time. As timers work in different ways be sure to read the timer's instruction manual carefully.

**To record a broadcast using a timer**

❶ Connect the tape deck, receiver and timer. Set the timer so that power is supplied to the connected equipment.

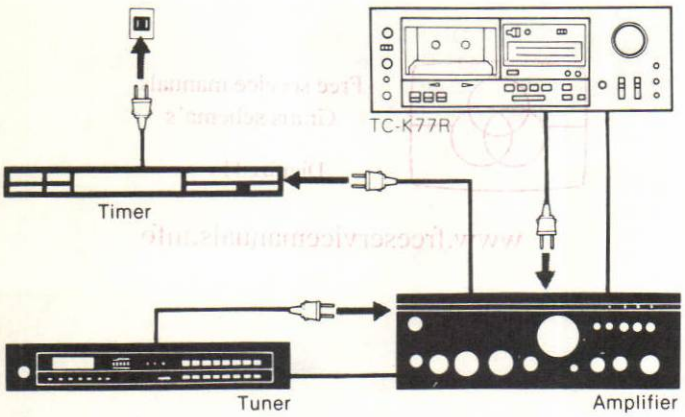


❷ Turn on the receiver and tune in the station which will broadcast the program you want to record.
❸ Set the tape deck's timer switch [ ⏲ ] to OFF.
❹ Insert a cassette. Make sure that the tab is intact or that the tab slot is covered with plastic tape.
❺ Turn on the tape deck and adjust the recording level.
❻ Check the direction indicated by the TAPE DIRECTION indicator. At the time set on the timer, the tape will begin to run in that direction. To change the direction, first press the pause button, then the forward [ ▶ ] or the reverse [ ◀ ] button, and, finally, the stop button.
❼ Set the timer for the desired time. (At this point power to the connected equipment will be cut off.)
❽ Set the tape deck's timer switch to REC.
The tape deck is now ready to start recording at the time set on the timer.

**To play back using a timer**

The connections between equipment are the same as for recording using a timer.
❶ Set the tape deck's timer switch to OFF.
❷ Turn on the receiver and set the appropriate switches for playback.
❸ Turn on the tape deck, and insert the recorded cassette.
❹ Check the direction of the TAPE DIRECTION indicator.
❺ Set the timer for the desired time. (At this point power to the connected equipment will be cut off.)
❻ Set the tape deck's timer switch to PLAY. The tape deck is now ready to start playback at the time set on the timer.

**Note**

The tape deck's timer switch will function properly only if the tape deck is turned on **after** the switch is set to REC or PLAY. Do not change the setting of the timer switch during the four second stand-by period immediately after the power is turned on. If you want to change the setting of the switch, turn the power off first.

## MAINTENANCE

**Cleaning of heads and tape path**

We recommend cleaning after every 10 hours of operation. To make the best possible recordings, however, you should clean all surfaces over which the tape travels before every recording.
❶ Press the eject button [ ⏏ ] to open the cassette holder and remove the window.

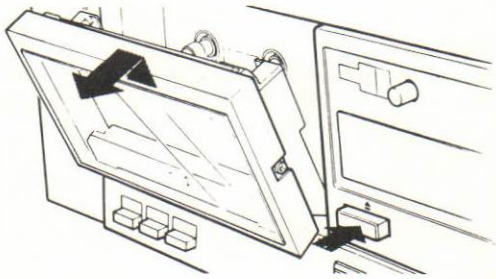

❷ Press the POWER switch to ON.
❸ Wipe the tape guide using a dry cleaning tip. Then slightly moisten the cleaning tip with cleaning fluid or alcohol and wipe the heads, and right and left capstans.

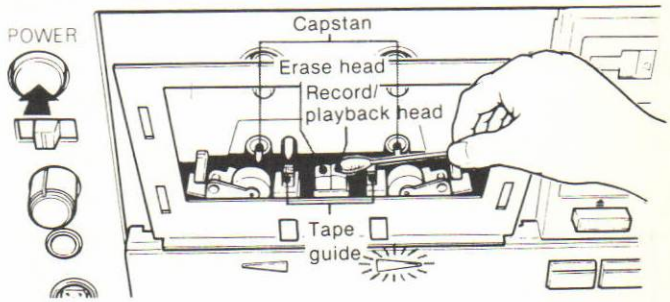


❹ Push the frame in.
❺ Press the forward button [ ▶ ] and wipe the right pinch roller, as illustrated.

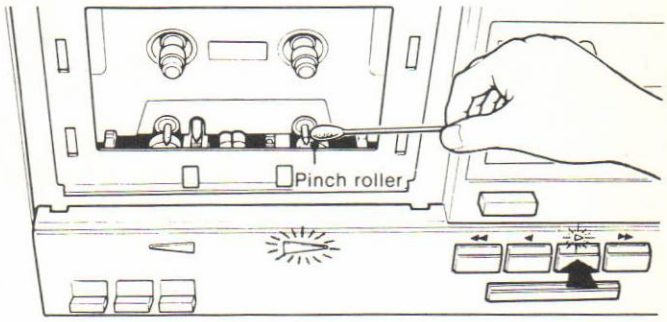

❻ Press the reverse button [ ◀ ] and wipe the left pinch roller. Because the automatic shut-off mechanism will activate if the right reel spindle is not moving, in order to wipe the left pinch roller properly, you will have to either rotate the right reel spindle with your hand or fit an elastic band over both reel spindles as illustrated so that the right reel spindle rotates with the left reel spindle.

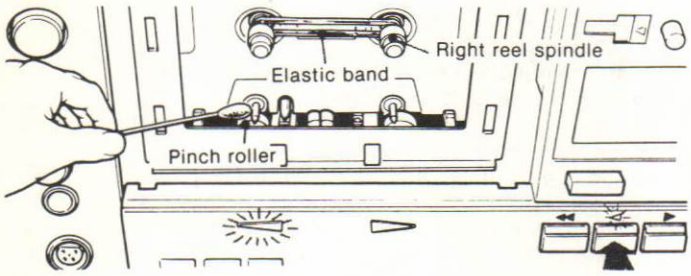


❼ When you have finished cleaning, press the stop button. (If you used an elastic, don't forget to remove it.)
❽ Press the eject button to open the frame, and replace the window.

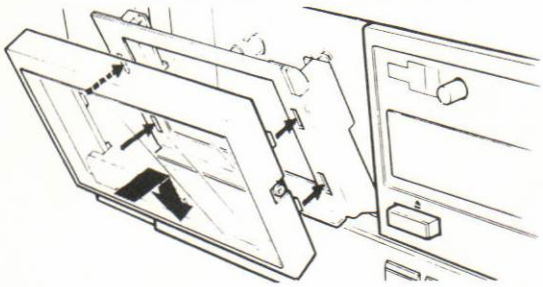

● After cleaning the heads and tape path, do not insert a cassette until the cleaned areas are completely dry.

**Demagnetizing heads**
After 20 to 30 hours of use, enough residual magnetism will have built up on the heads to begin to cause loss of high frequencies and hiss. At this time you should demagnetize the heads and all metal parts in the tape path with a commercially available head demagnetizer. Be sure that the tape deck is turned off while you demagnetize.

**Cleaning the cabinet**
Clean the cabinet, panel and controls with a soft cloth lightly moistened with a mild detergent solution. Do not use any type of abrasive pad, scouring powder or slovent such as alcohol or benzine.

# TROUBLE CHECKS

The following trouble checks will help you correct the most common problems encountered with a tape deck. Should any problem persist after you have made these checks, consult your nearest Sony service facility.
Before proceeding with these trouble checks, first check these basic points :

- The power cord must be firmly connected.
- Amplifier connections must be firmly made.
- Heads, capstan and pinch roller should be clean.
- The amplifier controls and switches should be set correctly.

## FUNCTION BUTTONS AND TAPE TRANSPORT PROBLEMS

**The function buttons do not activate right after the POWER switch is turned on.**

- While the indicator of the pause button is blinking, the recorder is in stand-by mode. Press the function buttons after the indicator stops to blink.

**Recording or playback begins as soon as the POWER switch is turned on.**

- The timer switch is set at either REC or PLAY.

**The record button and the forward button do not activate.**

- The cassette holder is not fully closed.

**The record button does not activate.**

- No cassette in the holder.
- The tab has been removed from the cassette.

**The automatic shut-off mechanism activates before the end of the tape.**

- The tape is slack.
- The MEMORY switch is set to ON.
- This situation may also be caused by a deformed cassette shell.
- The cassette holder is brightly illuminated.

**Tape transport noise seems excessively loud in rewind or fast-forward mode.**

- This situation depends upon the cassette used and not a problem.

**The heads do not reverse unless the tape (including the leader tape) is wound completely.**

- This can happen if there is less than 10 seconds from the starting point of the recording or playback to the beginning of the leader tape.
- This can also happen if the color of the leader tape is too dark, the material used for the leader tape is opaque, the leader tape is of a striped pattern, or the cassette has no leader tape at all.
- This can also happen if the magnetic coating is extremely thin, as when using a C-120 cassette tape.

## RECORDING AND PLAYBACK PROBLEMS

**Recording or playback cannot be made or there is a decrease in sound level.**

- Contamination or magnetic build-up on the record/playbak head.
- Improper connection.
- Improper setting of the amplifier controls.

**Excessive wow or flutter or drop out**

- Contamination of the capstan or pinch roller.

**Incomplete erasure**

- Contamination of the erase head.

**Increase of noise or erasure of high frequencies**

- Magnetic build-up on the head.

**Unbalanced tone in higher frequencies**

- Improper setting of the DOLBY NR switch. If a cassette is recorded with the switch set to ON, play back with it at ON. If a cassette is recorded with the switch set to OFF, play back at OFF.
- Improper setting of the TAPE select switch. If recorded with the switch in the wrong position, adjust the tone controls of the amplifier in playback.

## HOWLING OR HUM NOISE

**Oscillation occurs when trying to record from microphones.**

- The microphone is too near the loudspeakers. Move the microphone away from the loudspeakers or reduce the amplifier volume.

**Hum noise**

- The tape deck is stacked on or under the amplifier. Relocate it.

## 1-3. FUNCTION MECHANISM DESCRIPTION

The solenoid-driven mechanism changes modes from one to another.

**Brake Release during fast forward mode and rewind mode.** See Fig. 1-1.

1. Depress the function button ►► (FF) or ◄◄ (REW).
2. The plunger, which actuated by the solenoid PM2 supplied with direct current from Q622, moves in the direction shown by the arrow Ⓐ. When the brake solenoid slider moves along with the plunger, the head trigger lever moves in the direction shown by the arrow Ⓑ and releases the lock of the brake gear.
3. Being pulled by the spring, the brake gear turns in the direction shown by the arrow Ⓒ and comes into the drive gear. The brake gear turns furthermore in the direction shown by the arrow Ⓒ since the drive gear coupled with the flywheel is rotating in the direction shown by the arrow Ⓓ.
4. When the cam pushes the brake arm (A) in the direction shown by the arrow Ⓔ, the brake lever moves in the direction shown by the arrow Ⓕ and releases the brake.

Note: FWD. . . forward FF. . . . . fast forward
REV. . . reverse REW. . . rewind

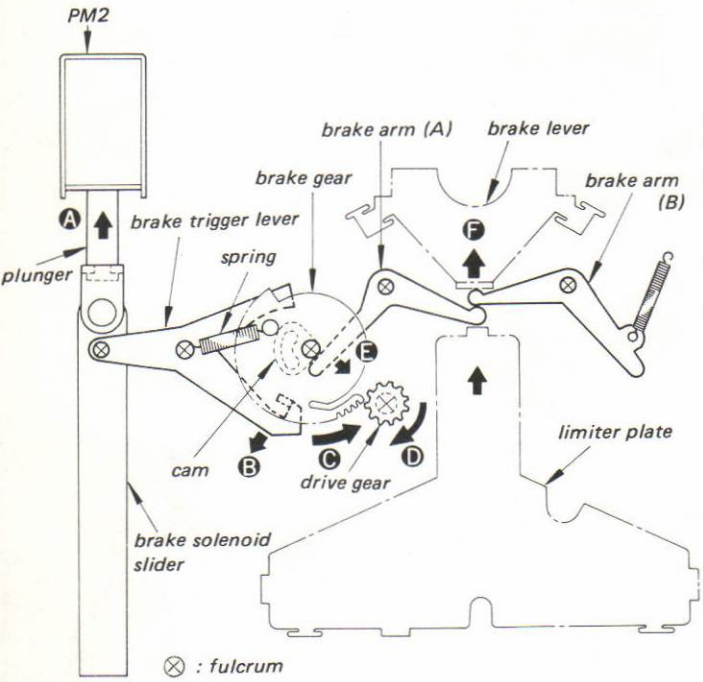


Fig. 1-1

**Head Deck Drive during forward mode.** See Fig. 1-2.

1. Depress the function button ► (FWD).
2. The plunger, which actuated by the solenoid PM 1 supplied with direct current from Q620, moves in the direction shown by the arrow Ⓐ, while the brake solenoid PM2 releases the brake.
   When the head solenoid slider moves along with the plunger, the head trigger lever moves in the direction shown by the arrow Ⓑ and releases the lock of the head gear.
3. Being pulled by the spring, the head gear turns in the direction shown by the arrow Ⓒ and comes into the drive gear.
   The head gear turns furthermore in the direction shown by the arrow Ⓒ since the drive gear coupled with the flywheel is rotating in the direction shown by the arrow Ⓓ.
4. When the cam pushes the head arm (A) in the direction shown by the arrow Ⓔ, the limiter plate moves in the direction shown by the arrow Ⓕ.
   Thus, the head deck is lifted and the head contacts the tape.
5. Before the solenoid PM2 finishes attraction, due to the limiter-plate moving, the brake lever moves in the direction shown by the arrow Ⓕ in Fig. 1-1 and the brake is kept released.

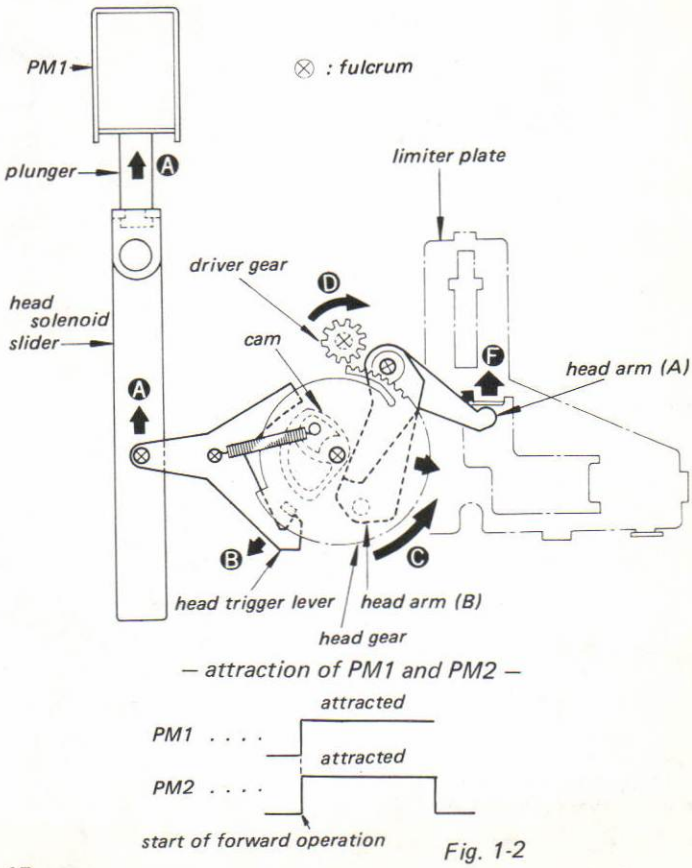


Fig. 1-2

**Roto-Bilateral Head Mechanism**

Transition from FWD mode to REV mode.
See Fig. 1-3.

1. Depress the function button ◄ (REV) or set the DIRECTION MODE switch to make REV mode at the end of a tape in FWD mode.
2. When the plunger is actuated by the solenoid (PM 1) supplied with direct current from Q620, the head solenoid releases once and the head-solenoid slider momentarily moves in the direction shown by the arrow Ⓐ .
3. The head-solenoid slider's movement makes the head gear turn in the direction shown by the arrow Ⓑ .
4. With the head gear turning, the cam pushes the head arm (B) in the direction shown by the arrow Ⓒ and the drive slider also moves in the same direction.
5. Since the drive slider and the direction slider are connected with the reverse hook lever, the direction slider moves in the direction shown by the arrow Ⓓ and the bilateral head gear is pushed in the direction shown by the arrow Ⓔ .
   Consequently, the record/playback head is turned 180-degree and the REV mode is set.

Transition from REV mode to FWD mode.
See Fig. 1-4.

1. Depress the function button ► (FWD) or set the DIRECTION MODE switch to make FWD mode at the end of a tape in REV mode.
2. When the plungers are simultaneously actuated by the solenoids (PM1, 2) driven by signal from IC601, the head and brake solenoid sliders move in the direction shown by the arrow Ⓕ .
3. The brake-solenoid slider lifts the reverse hook lever and the head-solenoid slider's movement makes the head gear turn in the direction shown by the arrow Ⓖ .
4. With the head gear turning, the cam pushes the head arm (B) in the direction shown by the arrow Ⓗ and the drive slider also moves in the same direction.
   However, the direction slider does not move because it is fastened by the reverse-hook lever.
5. Since the pin ❶ of the drive slider pushes the reverse lever on the direction slider in the direction shown by the arrow Ⓘ , the pin ❷ is pushed in the direction shown by the arrow Ⓙ and the reverse slider moves in the direction shown by the arrow Ⓚ .
6. Consequently, when the bilateral head gear is pushed in the direction shown by the arrow Ⓛ , the record/playback head is turned 180-degrees and the FWD mode is set.

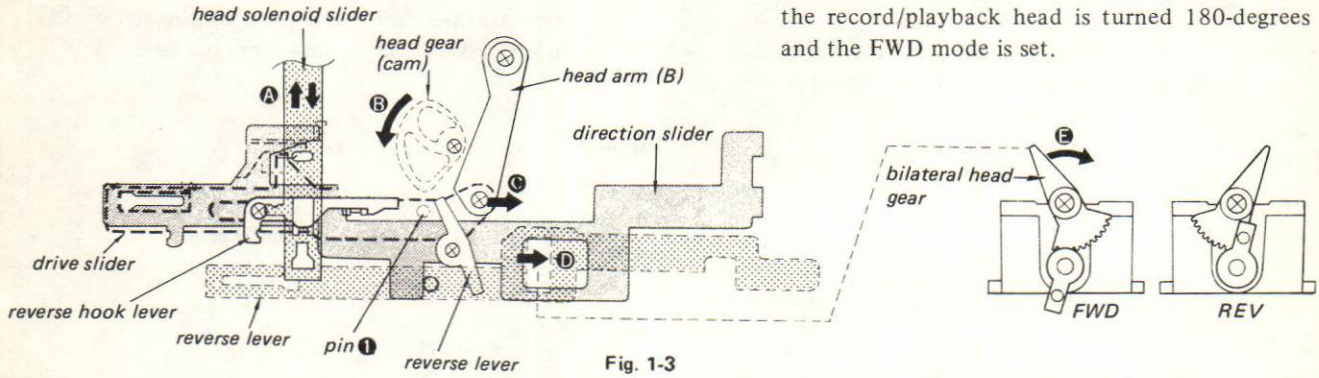

Fig. 1-3

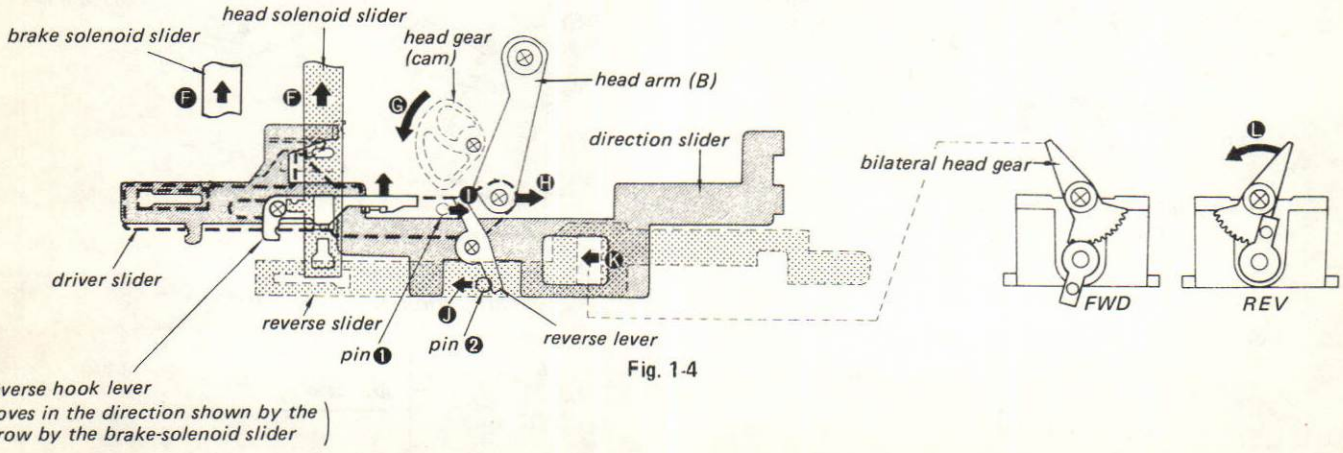

Fig. 1-4

## 1-4. TROUBLESHOOTING THE SET

### 1. When the Set does not Operate AT ALL:

| NOTABLE SYMPTOM | CHECKINGS TO BE MADE TO RECORD/PLAYBACK, SYSTEM-CONTROL OR SERVO CIRCUIT | CHECKINGS TO BE MADE TO DECK MECHANISM |
|---|---|---|
| Meter lamps do not light. | Check B+-line voltage. | N/A |
| Meter lamps do not light. | Check 9.7 V B+-line voltage. | |
| Pause lamp does not go on and off after POWER switch turned ON. | Check for "0" state at terminal 7 (reset) of IC601.<br>Check for presence of oscillation signal at terminals 1 and 42 of IC601. | N/A |
| Meter lamps turned ON.<br>Pause lamp goes on and off after POWER switch turned ON.<br>Only function-button lamps light up in timer play. | Check for 130 Hz signal at terminal 6 of IC601. | Check for capstan motor turning. |
| Meter lamps turned ON.<br>Pause lamp goes on and off after POWER switch turned ON.<br>Fucntion-button lamps do not light in timer play. | Check for "1" state at terminal 6 (stop) of IC602. | N/A |
| Function-button lamps light up and soon go OFF. | Check for B+ voltages for PM1 and PM2.<br>Check D616.<br>Check for kick signal presences from Q606 and Q607. | Gears got twisted.<br>Flywheel not turning.<br>Solenoid positions not proper. |
| Capstan motor does not turn. | Check servo circuit. | Gears got twisted. |

### 2. In Case the Mode Changes from One to Another Inadverdently when Function Button is Pressed.

Check the circuits from terminals 9 and 14 of IC602 to IC601.

### 3. When the Set Operates for a Short Periods.

| NOTABLE SYMPTOM | CHECKINGS TO BE MADE TO RECORD/PLAYBACK, SYSTEM-CONTROL OR SERVO CIRCUIT | CHECKINGS TO BE MADE TO DECK MECHANISM |
|---|---|---|
| Set operates only while function button is pressed.<br>Function-button lamps light up, and they go OFF right after solenoids started operation.<br>Pause lamp starts go ON and OFF. | Check circuit between shut-off transistor Q624 and terminal 5 of IC601.<br>Check for B+ voltage for system control circuit.<br>Check for input signal to terminal 6 of IC601. | N/A |
| Flywheel stops turning right after deck mechanism started operation. | Check the motor-servo cirucit. | Check mechanism section. |

4. When the Set does not Rewind.

| NOTABLE SYMPTOM | CHECKINGS TO BE MADE TO RECORD/PLAYBACK, SYSTEM-CONTROL OR SERVO CIRCUIT | CHECKINGS TO BE MADE TO DECK MECHANISM |
|---|---|---|
| Rewind lamp lights up.<br>Fast-forward operation is normal. | Check circuit between terminal 32 of IC601 and Q916. | N/A |
| Fast-forward operation is defective.<br>Fast-forward and rewind lamps light up. | Check reel motor.<br>Check circuits from terminals 18 and 16 to Q605 through Q608. | N/A |
| Rewind operation stops in a short period. | Check circuit between terminal 5 of IC601 and Q624. | N/A |

5. When the Set does not Fast-Forward.

| NOTABLE SYMPTOM | CHECKINGS TO BE MADE TO RECORD/PLAYBACK, SYSTEM-CONTROL OR SERVO CIRCUIT | CHECKINGS TO BE MADE TO DECK MECHANISM |
|---|---|---|
| Fast-forward lamp light up.<br>Rewind operation is normal. | Check circuit between terminal 32 of IC601 and Q916. | N/A |
| Fast-forward lamp lights up.<br>Rewind operation is defective.<br>Fast-forward operation ceases shortly. | Check circuits from terminals 16 and 18 of IC601 to Q605 through Q608.<br>Check reel motor.<br>Check circuit between terminal 5 of IC601 and Q624. | N/A |

6. When the Set does not Reverse.

| NOTABLE SYMPTOM | CHECKINGS TO BE MADE TO RECORD/PLAYBACK, SYSTEM-CONTROL OR SERVO CIRCUIT | CHECKINGS TO BE MADE TO DECK MECHANISM |
|---|---|---|
| Reverse lamp goes OFF shortly after lighting up.<br>Deck mechanism does not operate (Head base does not rise). | Check circuit between terminal 17 of IC601 and Q610 and Q611.<br>Check circuits between terminal 16 and Q606 and Q607. | N/A |
| Rewind operation is normal. | Check circuits around terminal 17 of IC601. | N/A |
| Reverse lamp lights up.<br>Head position reverses in four seconds after reverse lamp turning ON. | Check circuits from Q623, Q619 and Q620 to terminal 4 of IC601. | N/A |
| Reverse operation ceases shortly after starting reversing. | Check circuit between terminal 5 of IC601 and Q624. | N/A |



7. When the Set does not Forward.

| NOTABLE SYMPTOM | CHECKINGS TO BE MADE TO RECORD/PLAYBACK, SYSTEM-CONTROL OR SERVO CIRCUIT | CHECKINGS TO BE MADE TO DECK MECHANISM |
|---|---|---|
| Forward lamp lights up only for a short period.<br>Deck mechanism does not operate (Head base does not rise). | Check circuits associated with terminals 17 and 18 of IC601.<br>Check circuits from terminal 16 of IC601. | N/A |
| Reverse operation is normal .<br>Rewind operation is defective. | Check circuit from terminal 18 of IC601. | N/A |
| Forward lamp lights up and forward operation ceases in four seconds. | Check circuit between terminal 4 of IC601 and Q623. | N/A |
| Forward operation ceases shortly after forwarding. | Check circuit from terminal 5 of IC601. | |

**8. When the Set does not Perform Quick-Reversion.**

IC601 is normal when it operates with "1"-state signal at its terminal 4.

**9. When the Set Shuts Off.**

IC601 is normal when the set does not shut off with a "0"-state signal at terminal 5 of IC601.

**10. When the Timer Play is Defective.**

IC601 is normal when the set operates in forward mode with a "1"-state signal fed to terminal 3 of IC601 when the POWER is turned ON.

Check the direction switches.

## 1-5. TIMING CHARTS

The timing charts of the system-control section are given below.

1. **POWER switch turned ON:**

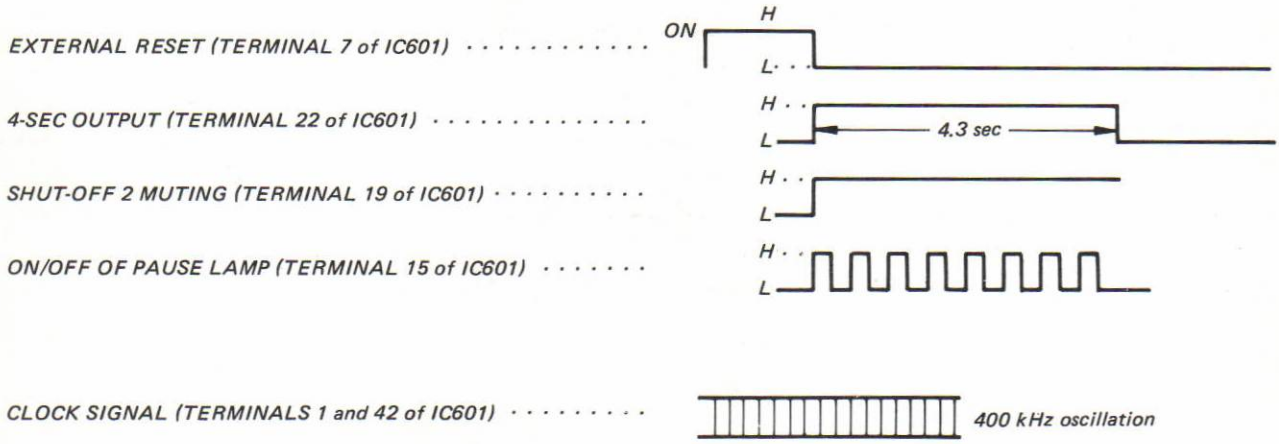


2. **POWER switch turned off:**

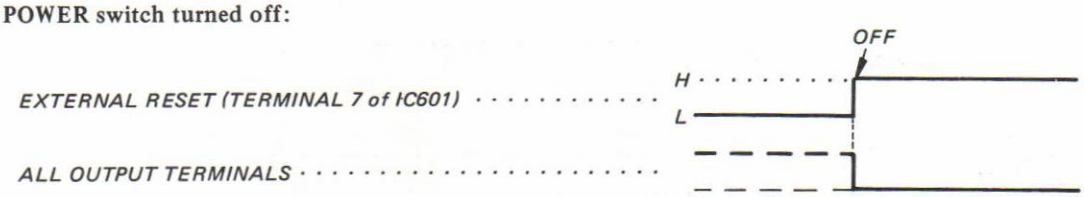


3. A 420 msec pausing time exists when one mode is changed to a different mode except for pause and record modes.

4. **From mechanism stoppage to playback mode:**

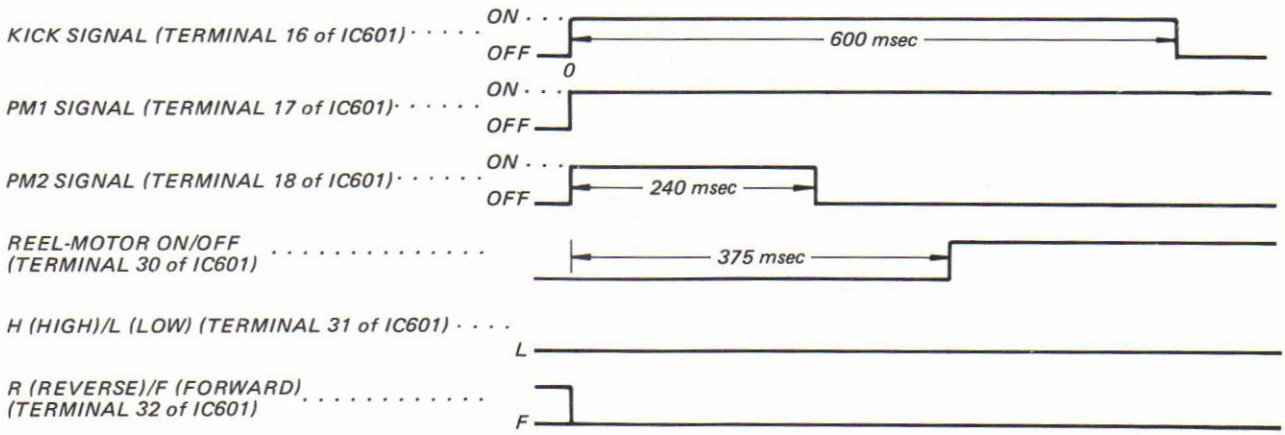

5. **From mechanism stoppage to forward pause mode:**

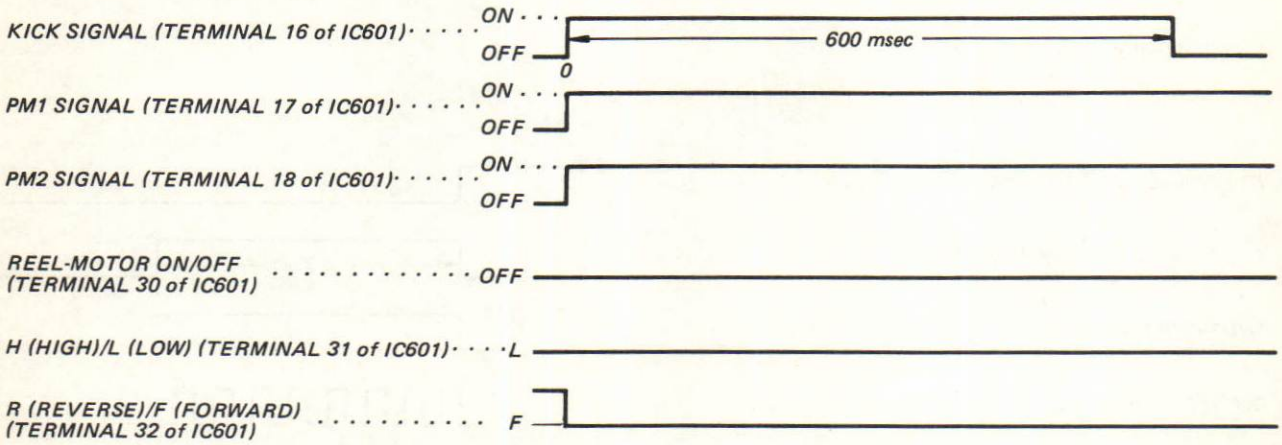


6. **From mechanism stoppage to reverse mode:**

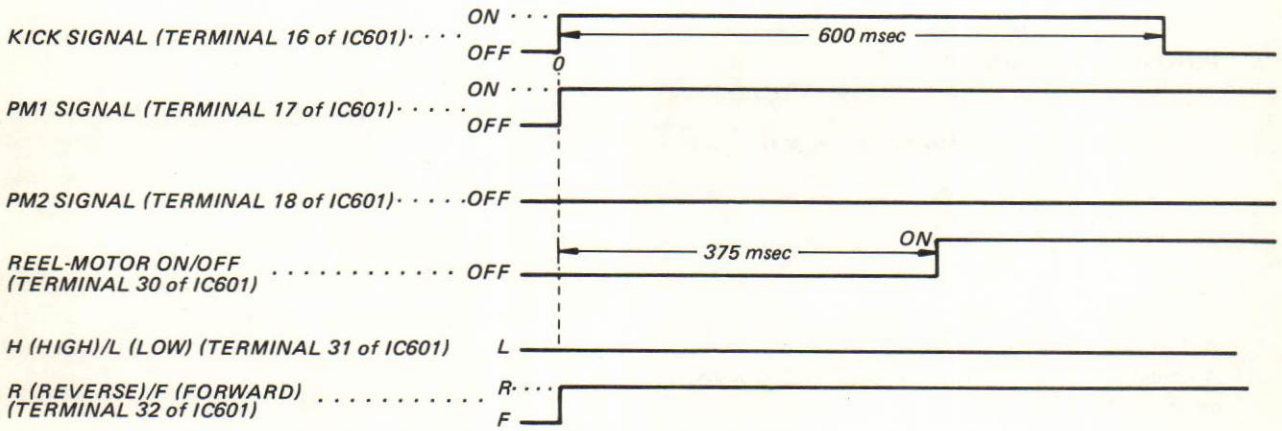


7. **From mechanism stoppage to reverse pause mode:**

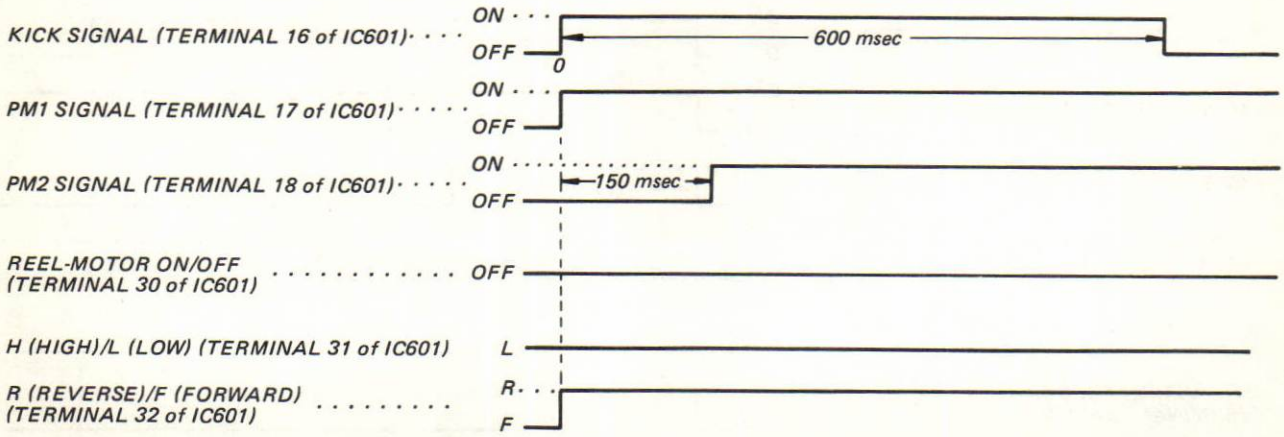

8. Rewind mode:

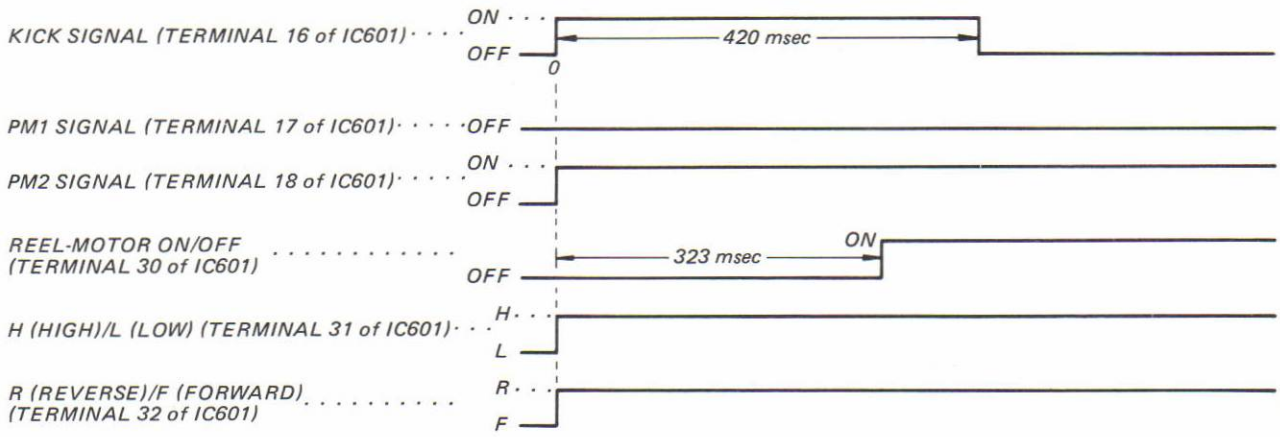


9. Fast-forward mode:

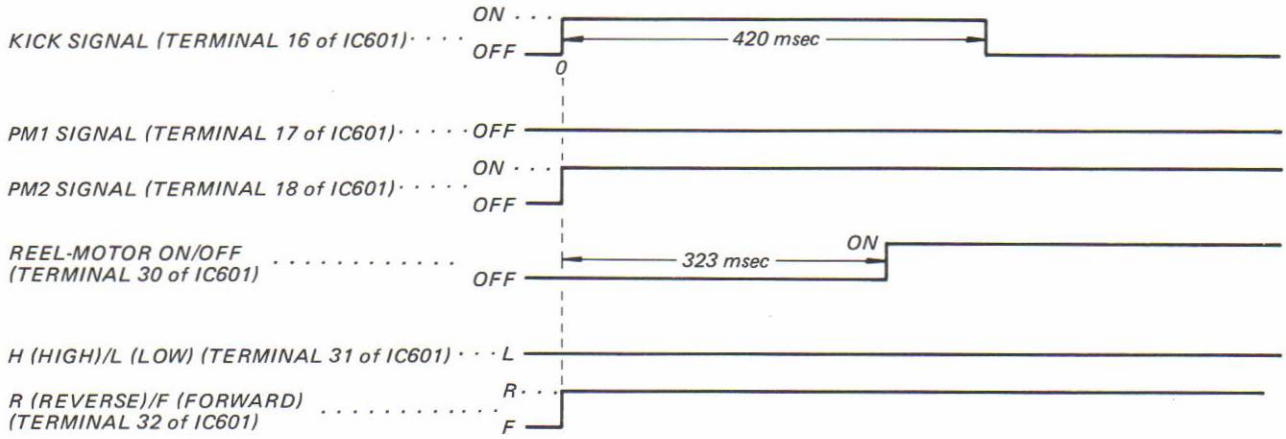


10. From playback or paused playback to mechanism stop mode:

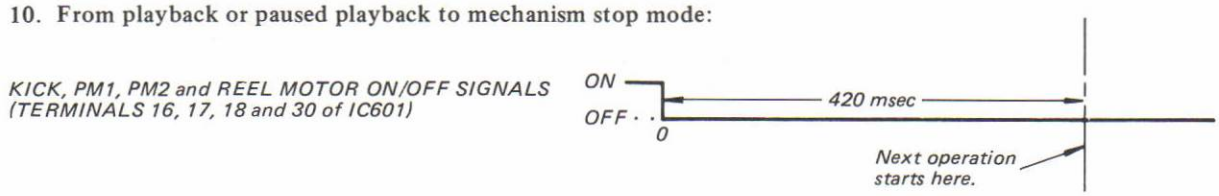


11. Pausing in playback mode:

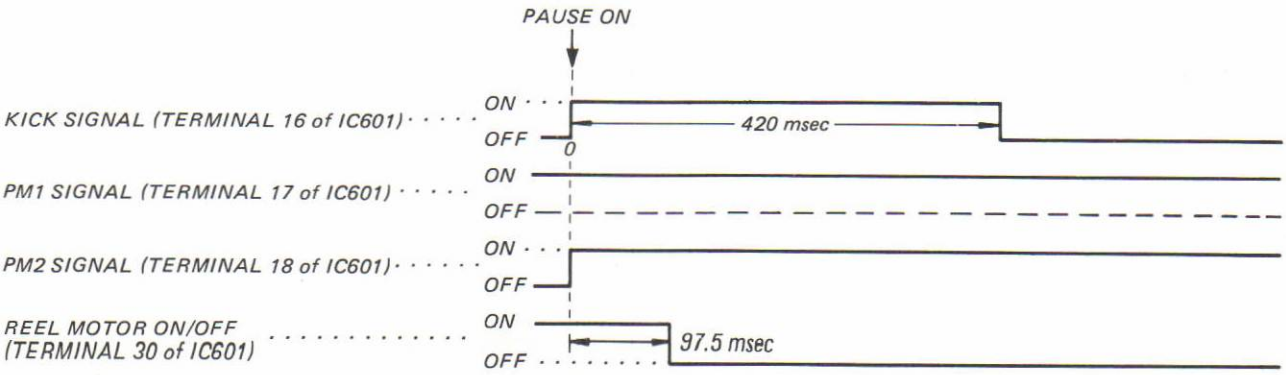

12. When pause in playback mode is released:

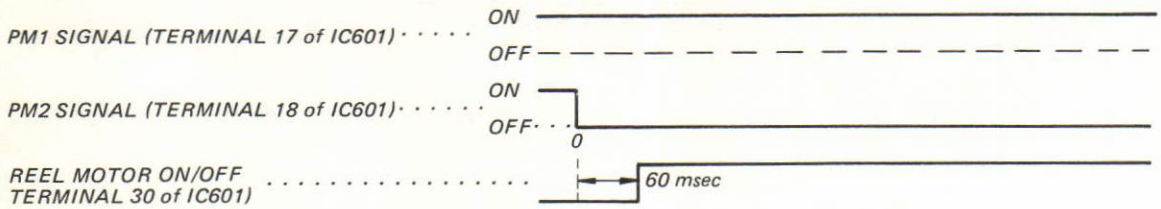


13. From rewind mode to mechanism stoppage:

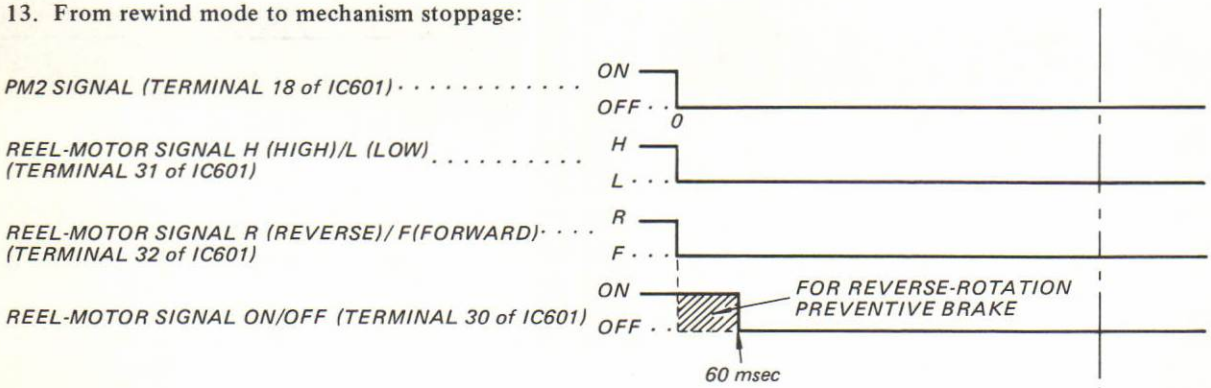


14. From fast-forward mode to mechanism stoppage:

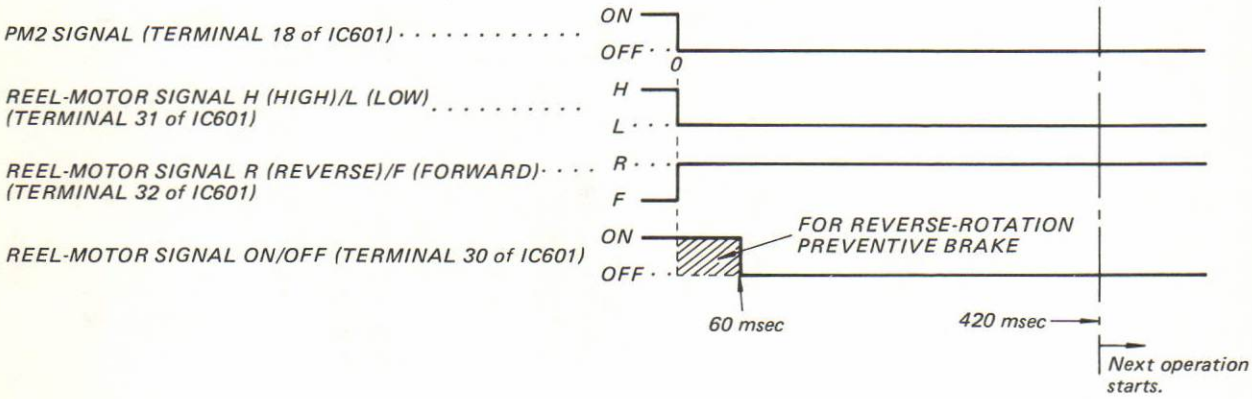


## LAMP OUTPUTS, MUTING ON/OFF AND BIAS ON/OFF

15. When stop switch is turned ON:

16. When rewind switch is turned ON:

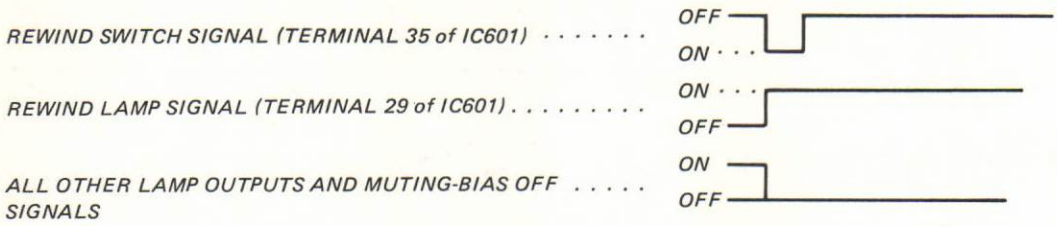


17. When fast-forward switch is turned on:

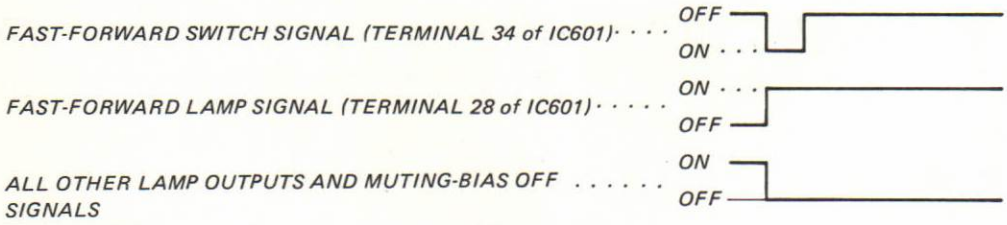


18. When (rewind or fast-forward) and (forward or reverse) switches are turned ON:

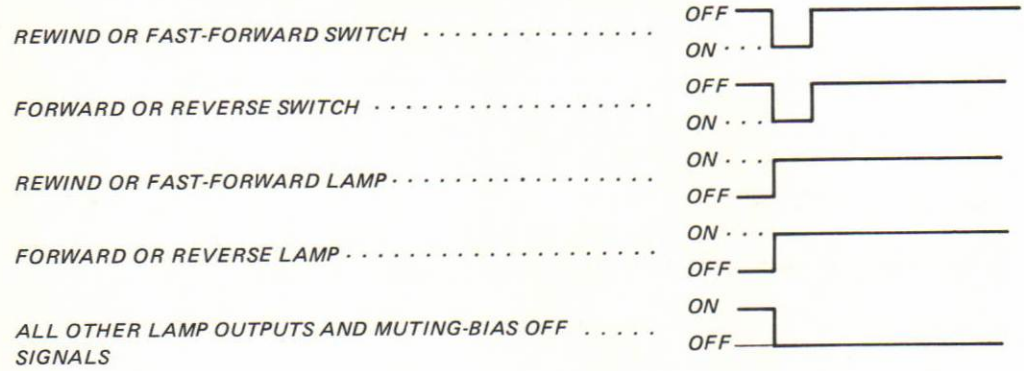


19. When forward or reverse switch is turned ON:

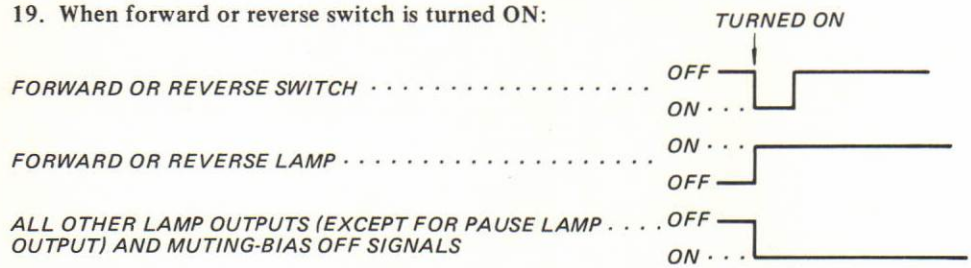


20. When pause switch is turned ON and OFF in all modes other than playback:

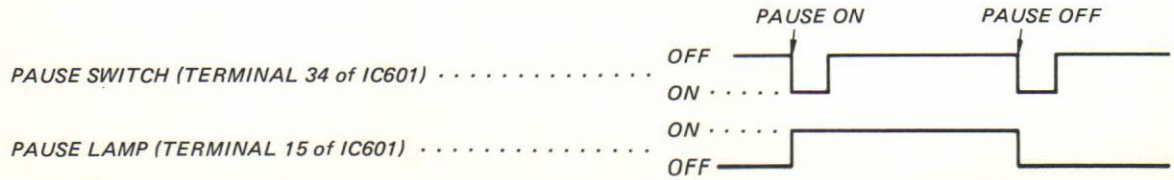

21. When pause switch is turned ON and OFF in playback mode:

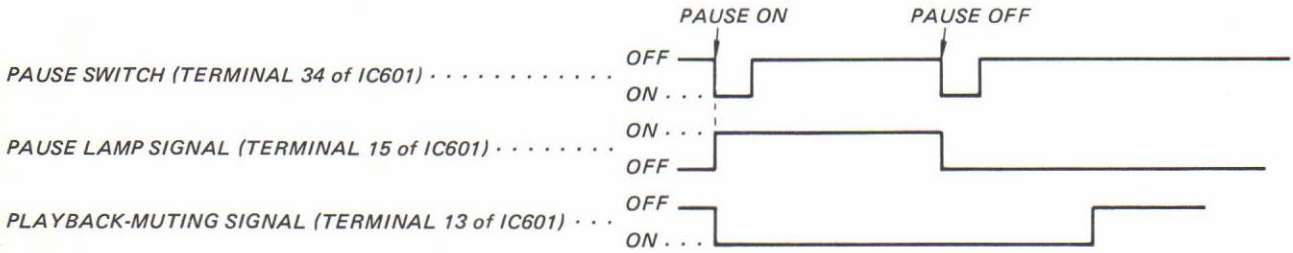


22. When pause switch is turned ON and OFF in record mode:

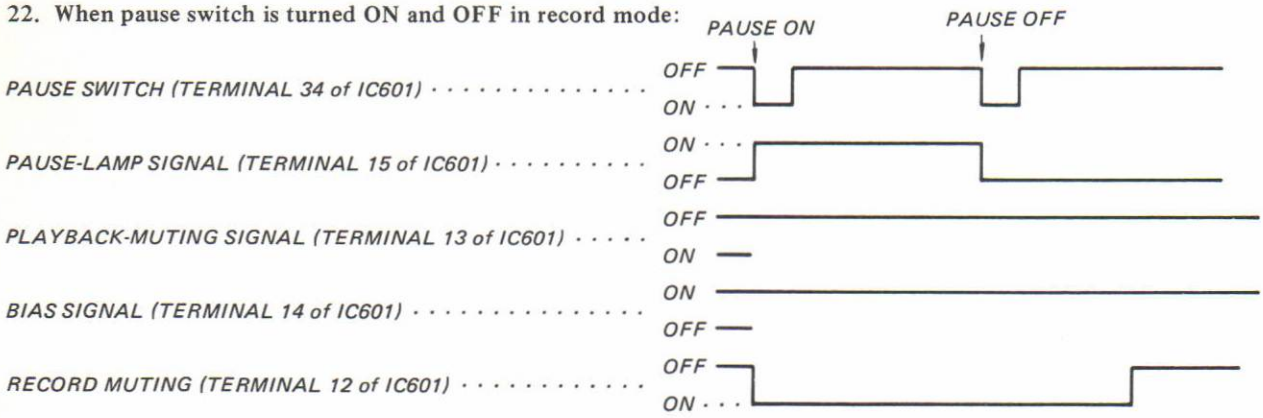


## WHEN MUTING AND BIAS ARE TURNED ON

23. When record switch is turned on in all modes except for playback:

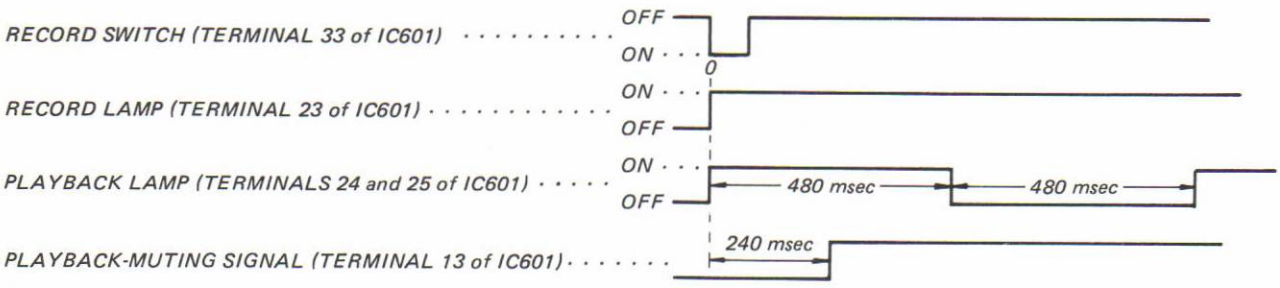

24. When record-playback switch is turned ON during record mode:

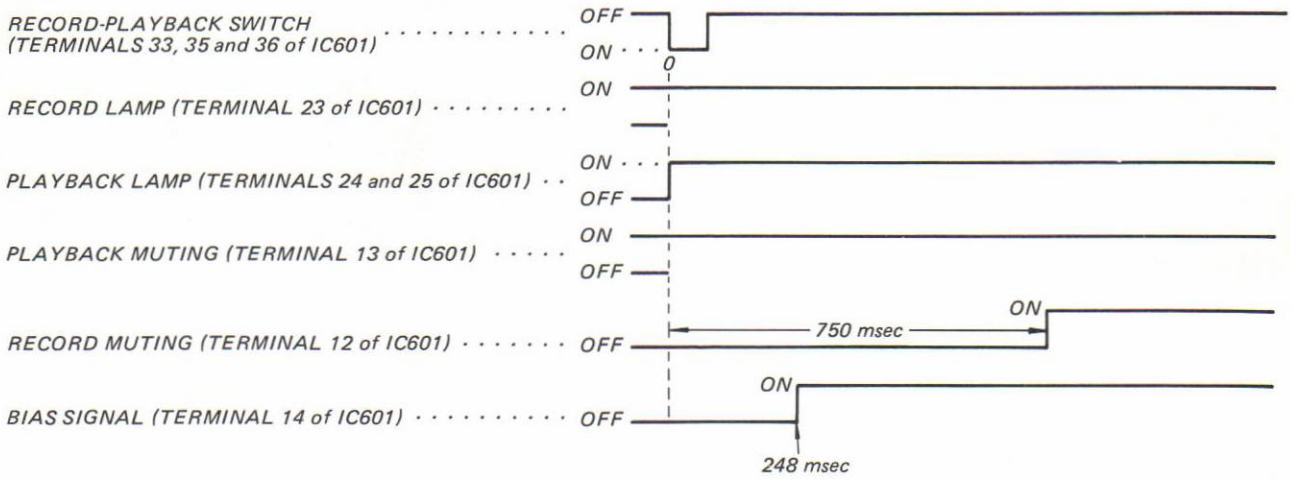


25. When record-playback switch is turned ON during playback mode:

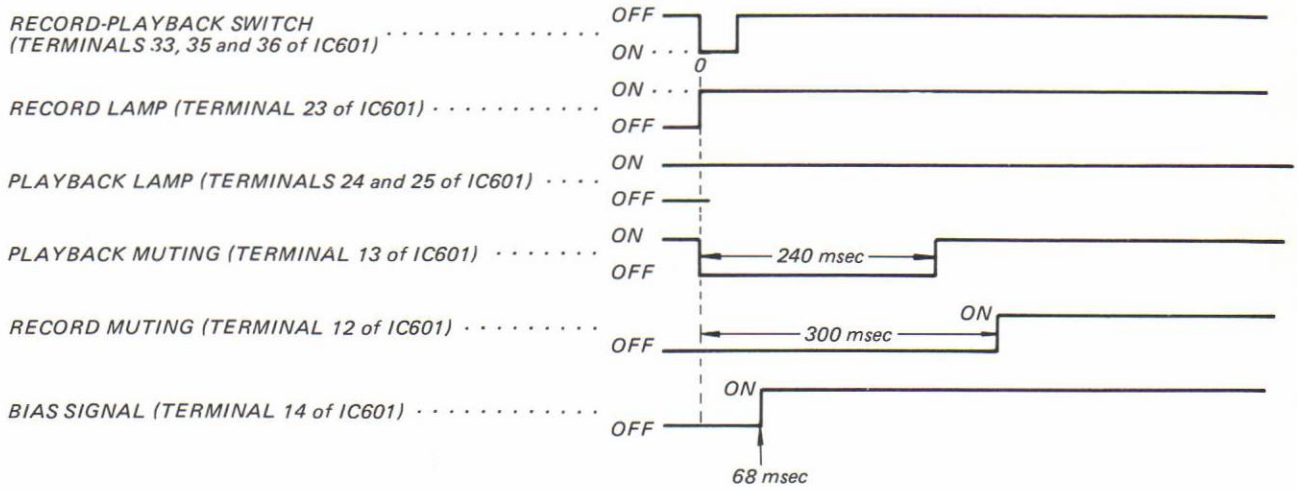


26. From stop to record-play mode:

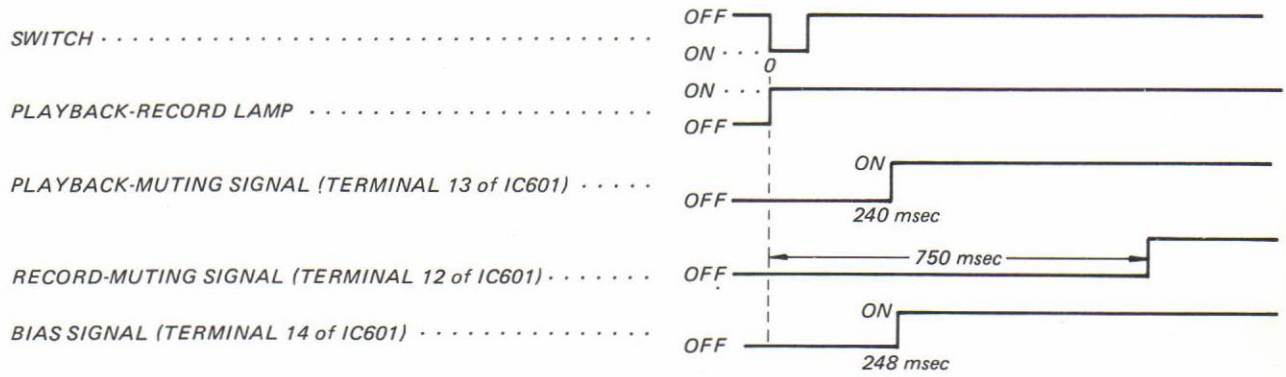

27. From stop to record-playback pause mode:

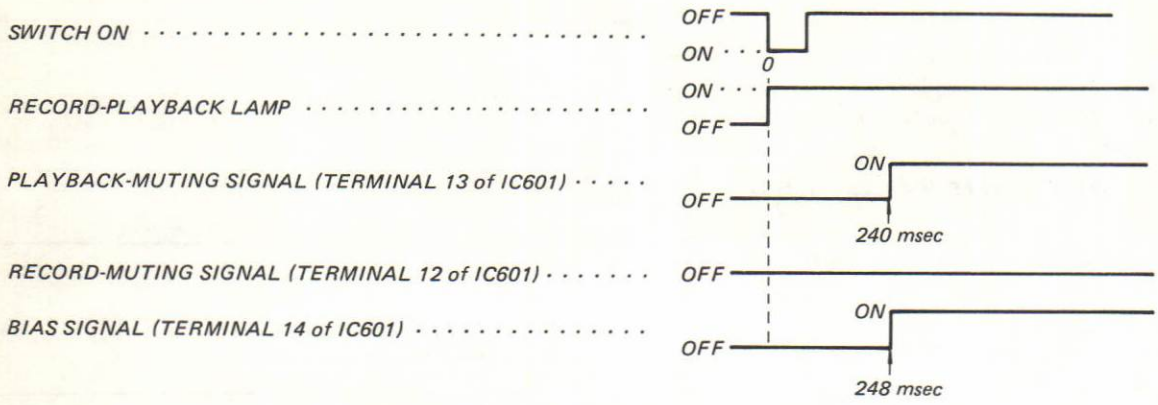


28. From forward-record to reverse-record mode and vice versa:

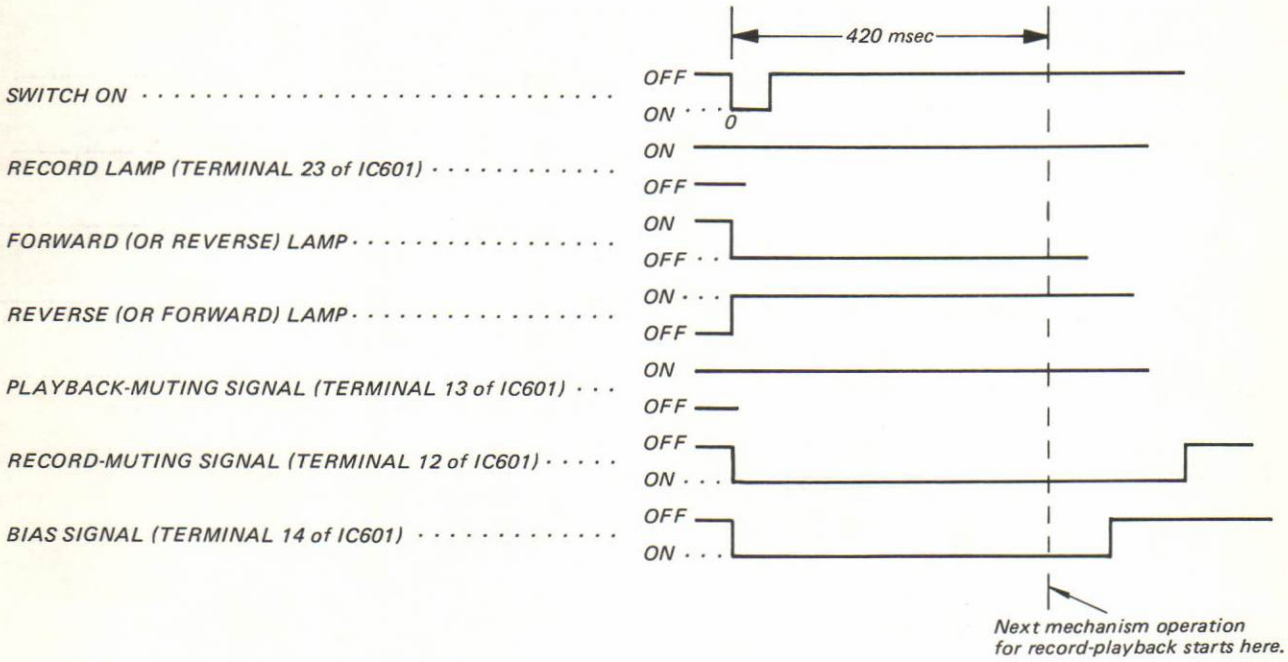


29. From stop to playback mode:

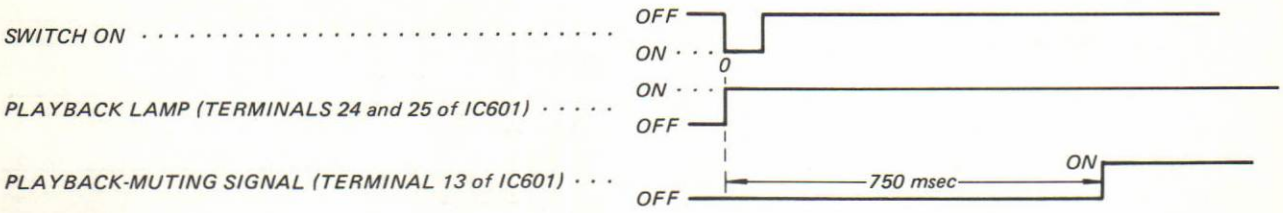

30. From pause to playback pause mode:

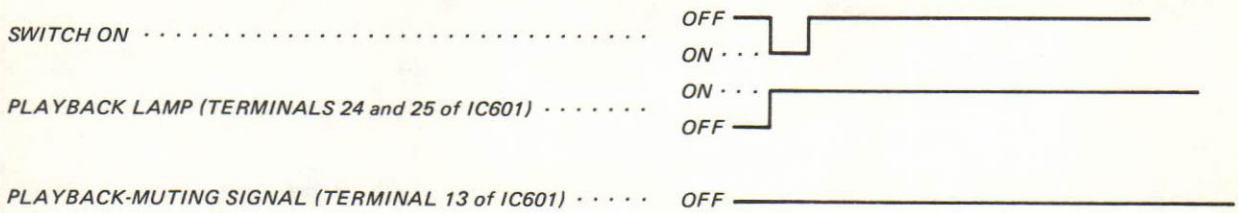


31. When pause switch is turned ON and OFF during playback mode:

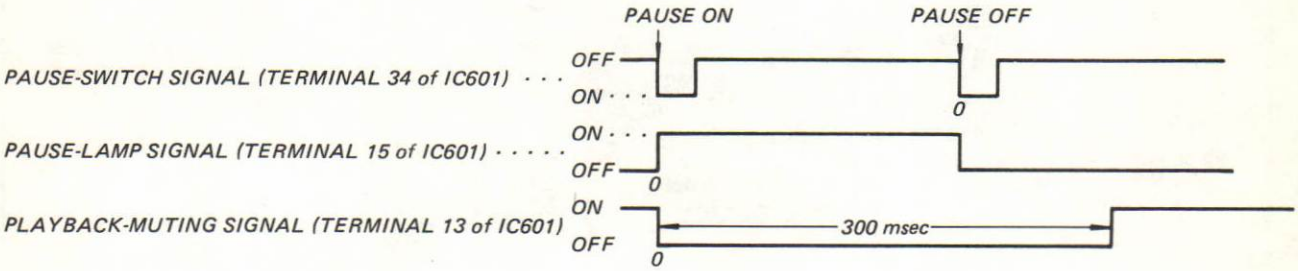


32. When pause switch is turned ON and OFF during record-playback mode:

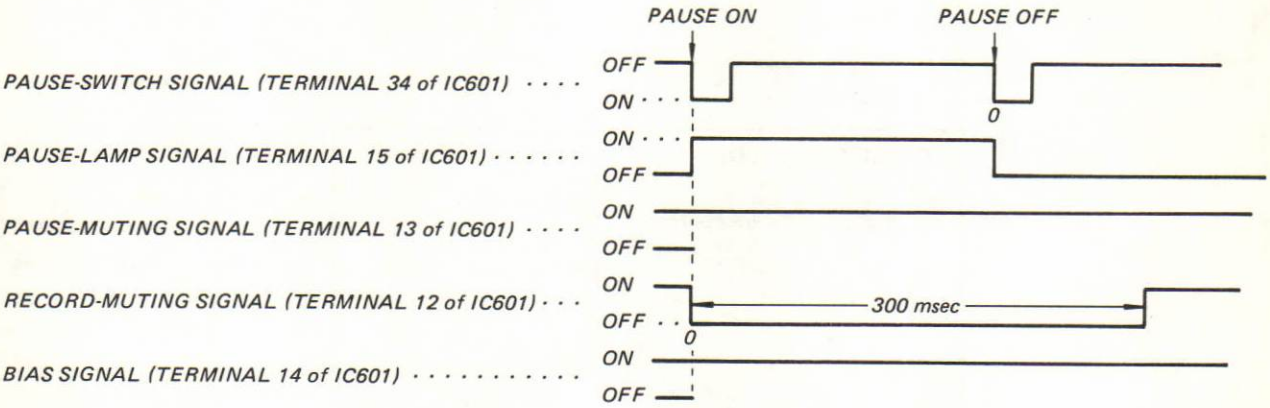

# SECTION 2
# DISASSEMBLY

**Note:** Follow the disassembly procedure in the numerical order given.

## TOP COVER


## CASSETTE HOLDER LID

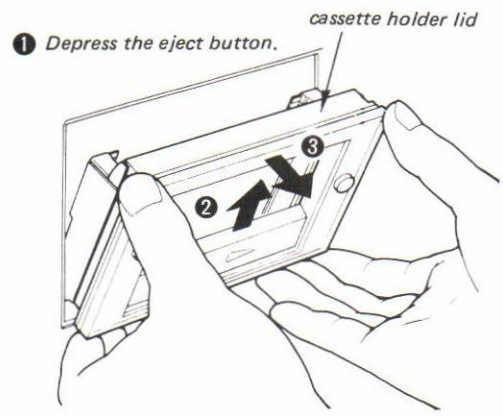

## BOTTOM PLATE AND FRONT PANEL

BOTTOM PLATE: ❶
FRONT PANEL: ❷

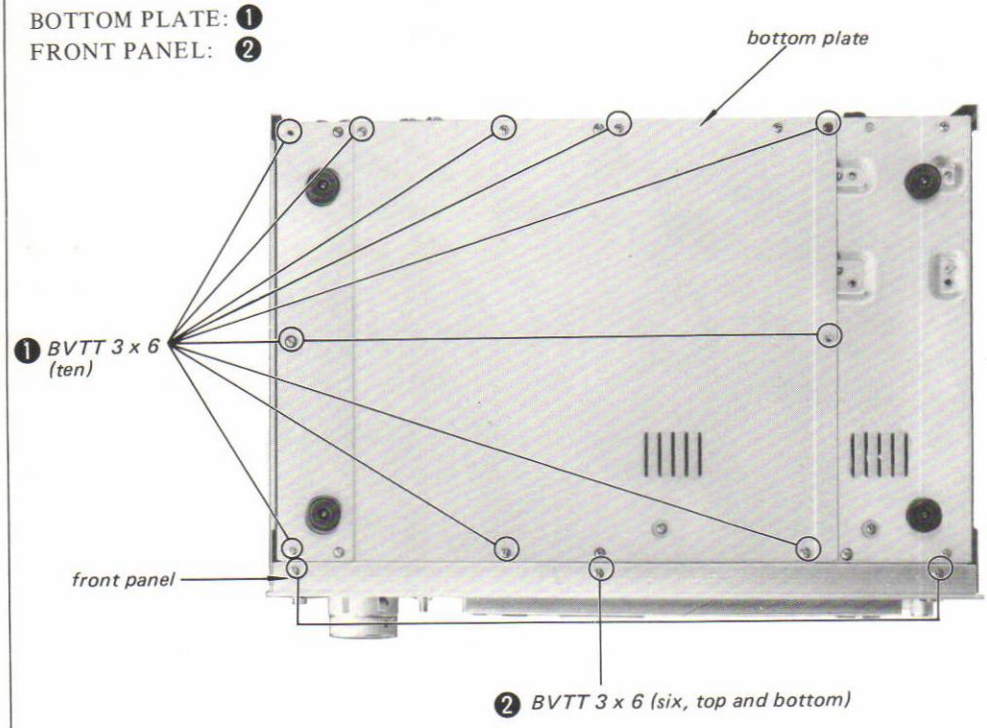


## FUNCTION PANEL

*Remove four screws.*

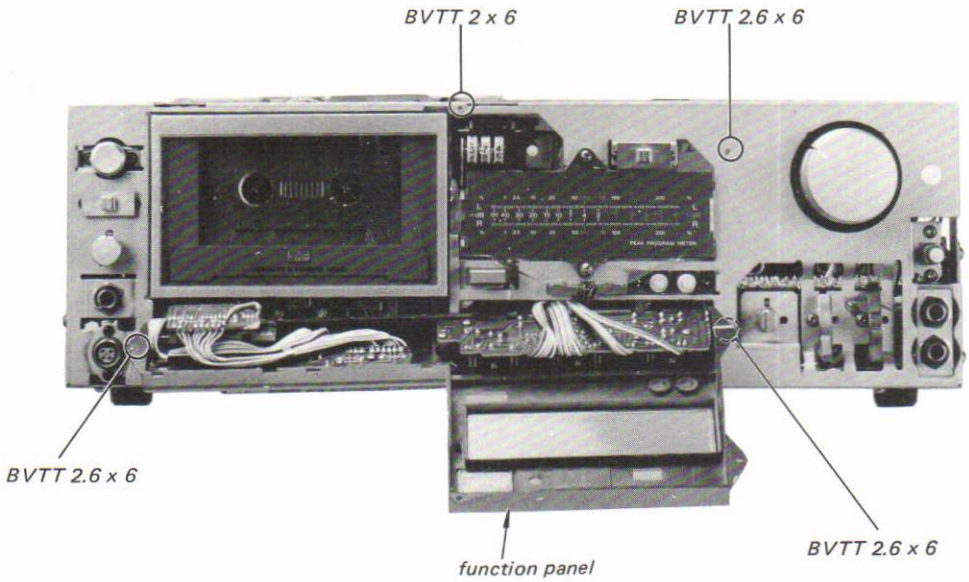

## MECHANISM BLOCK REMOVAL

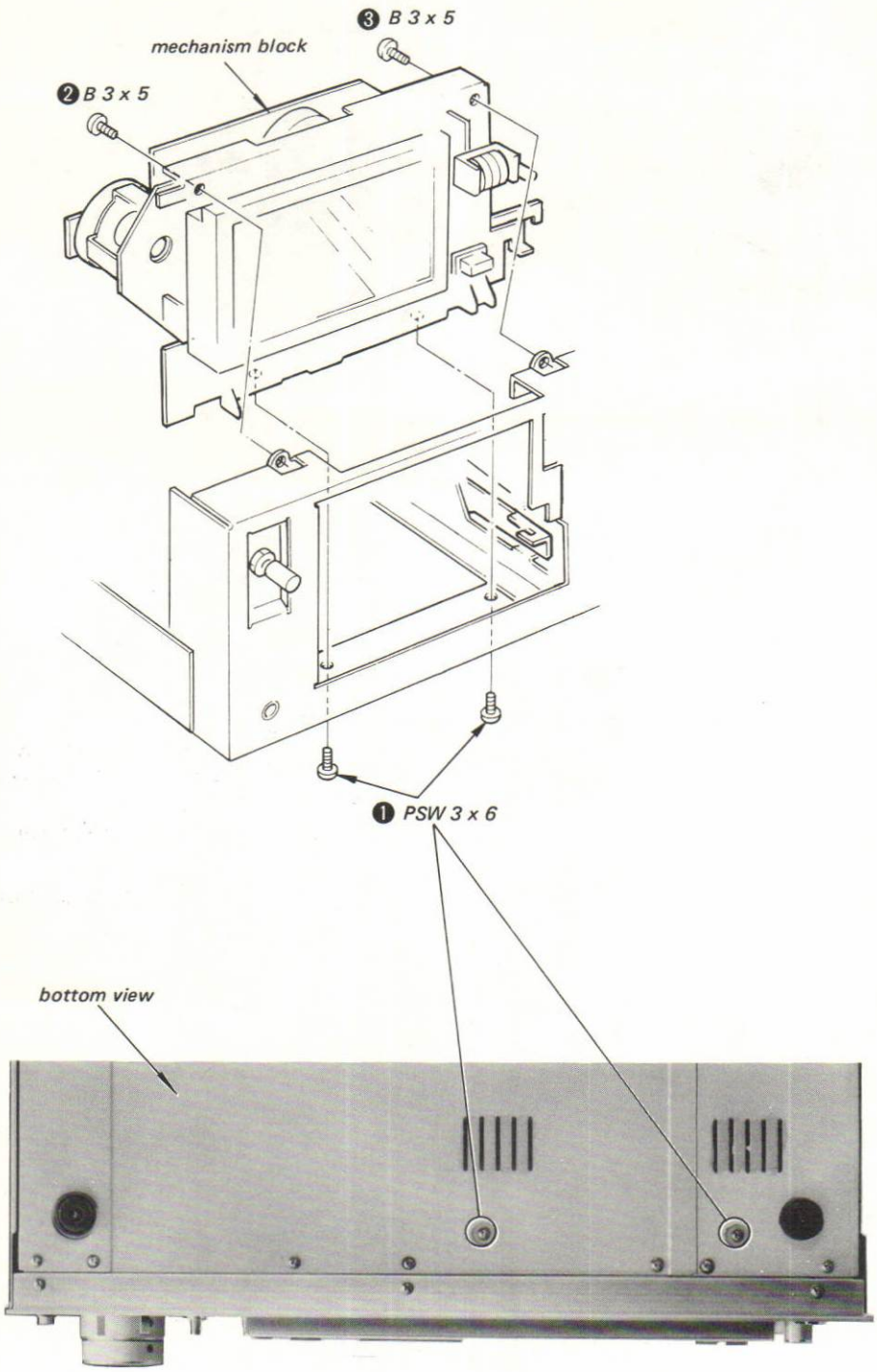

# SECTION 3
# ADJUSTMENTS

## 3-1. MECHANICAL ADJUSTMENTS

### PRECAUTION

1. Clean the following parts with a denatured-alcohol-moistened swab:
   - record/playback head
   - erase head
   - capstan
   - pinch roller
   - rubber belts
   - idlers
2. Demagnetize the record/playback head with a head demagnetizer.
3. Do not use a magnetized screwdriver for the adjustments.
4. After the adjustments, apply suitable locking compound to the parts adjusted.
5. The adjustments should be performed with the rated power supply voltage unless otherwise noted.

### Head Height Adjustment

**— Playback Mode —**

1. Prepare an adjustment cassette as shown below.
2. To eliminate tape curl and tape twist in FWD and REV modes, adjust the heights of tape guide/sensors by turning the adjustment screws or inserting the shim as shown.
3. After the adjustments, apply suitable locking compound to the adjustment screws.


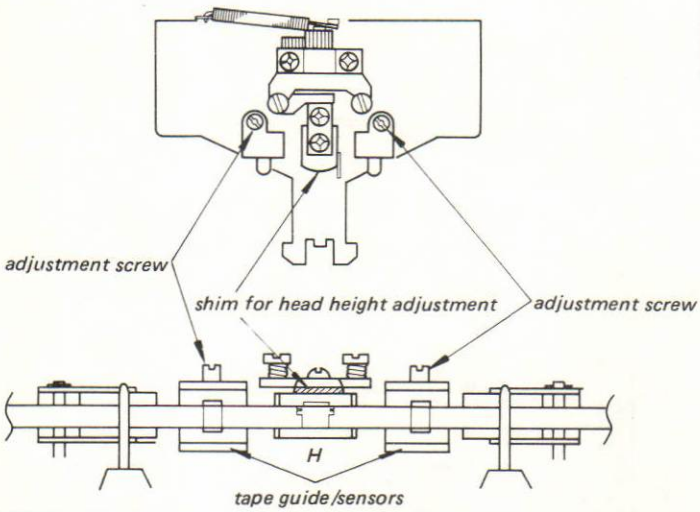




*Shim, head height adjustment*

| | |
|---|---|
| *3-558-328-01* | *t = 0.1* |
| *3-558-328-11* | *t = 0.2* |
| *3-558-328-21* | *t = 0.15* |

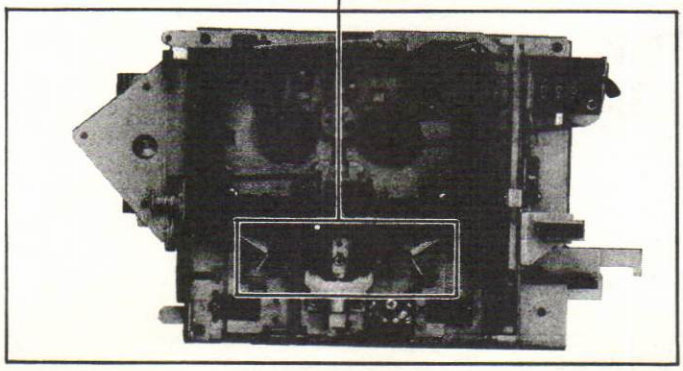

**Cassette Lid Switch (S23) Position Adjustment**

**– Stop Mode –**

Adjust the cassette lid switch position so that the clearance Ⓐ is 0 – 0.4 mm (0 – 1/64") when the cassette lid is opened by pushing EJECT button.

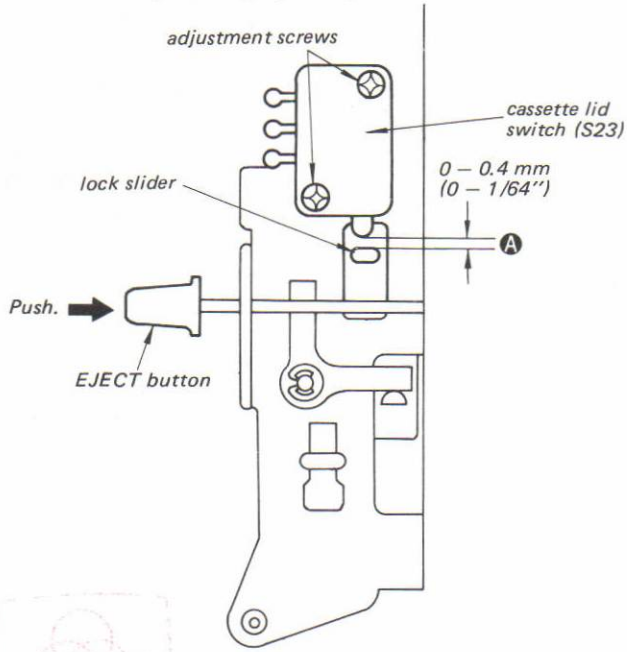


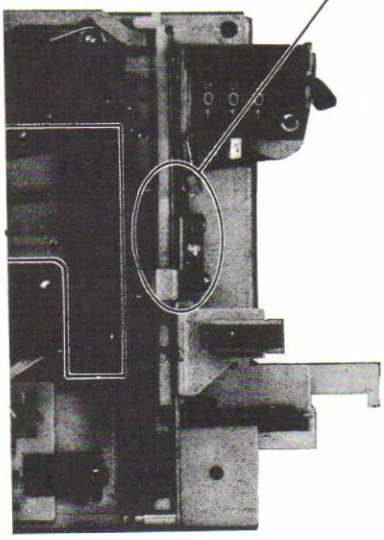

**Brake Torque**

| | |
|---|---|
| Tight side: | 50–200 g·cm (0.7–2.8 oz·inch) |
| Slack side: | 20–100 g·cm (0.28–1.4 oz·inch) |

**Pinch Roller Pressure**

400–500 g.cm (5.56–6.95 oz·inch)

**Back Tension Torque Adjustment**

1. Install the torque meter CQ-102A and measure the back tension torque in FWD mode.
   Install the torque meter CQ-101A and measure the back tension torque in REV mode.
2. To meet the specified torque, change the hook position of the spring.

   Specification: 3–4.5 g·cm

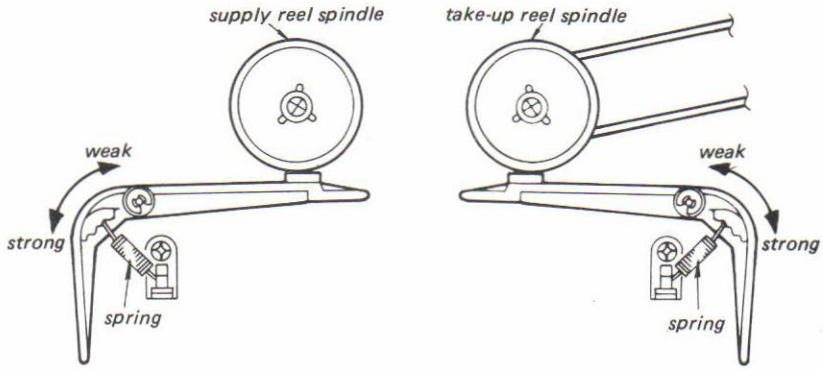


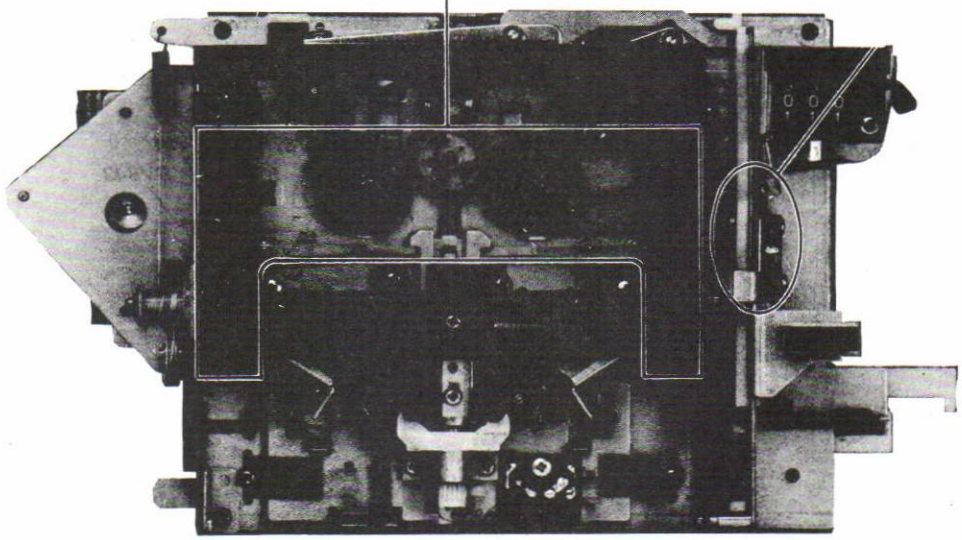

**Accidental-Erasure-Prevention Switches (S21, S22) Position Adjustment**

**– Stop Mode –**

1. Install a cassette with an erasure-proof tab.
2. adjust the erasure prevention switch positons so that the clearance between record-detection lever and the erasure prevention switches is 0.2 – 0.5 mm (1/64").

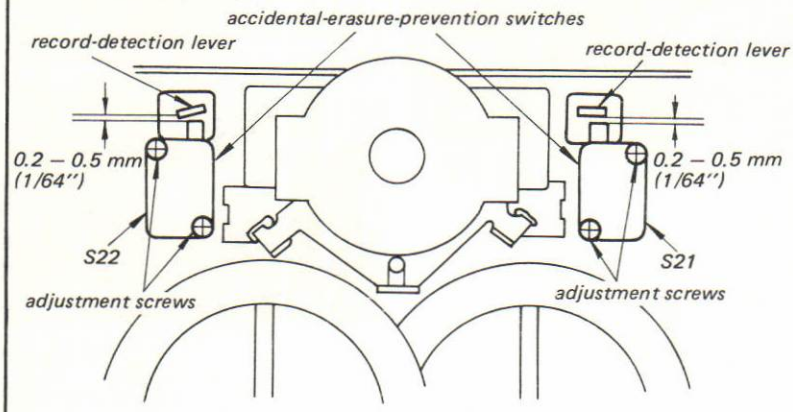


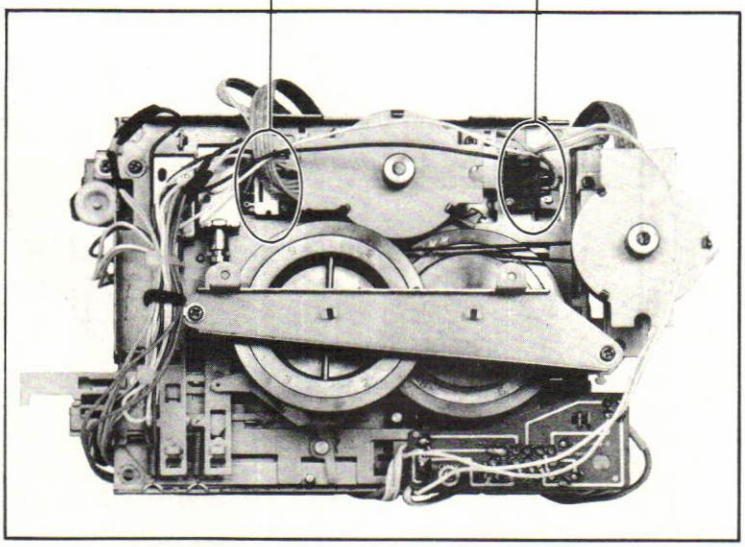

**Solenoid (PM 1, 2) Position Adjustment**

**– Stop Mode –**

1. Insert the pole piece of the head solenoid PM1 in the direction shown by the arrow.
2. Adjust the position of the head solenoid so that the clearance between the head gear and the head trigger lever is 0.1 – 0.3 mm.
3. Release the pole piece of the head solenoid.
4. Insert the pole piece of the brake solenoid PM2 in the direction shown by the arrow.
5. Adjust the position of the brake solenoid so that the clearance between the brake gear and the brake trigger lever is 0.5 – 1 mm (1/32").
6. Release the plunger of the brake solenoid.

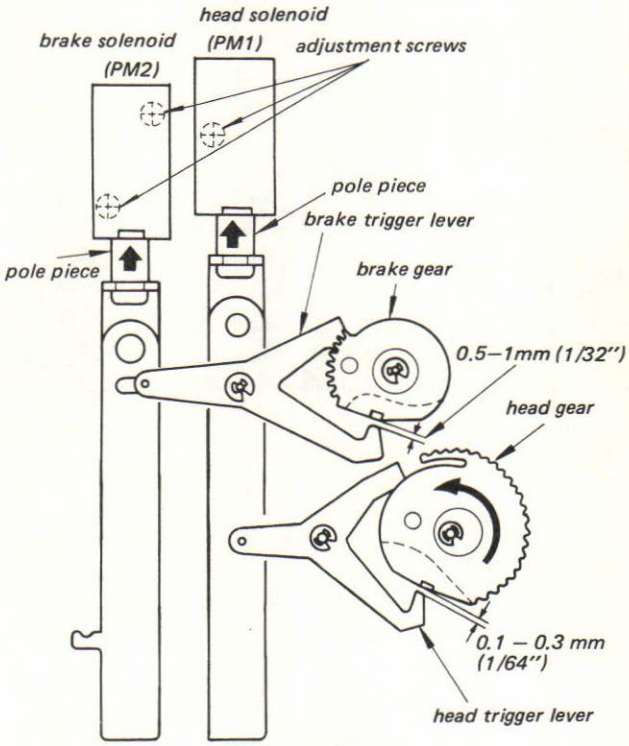


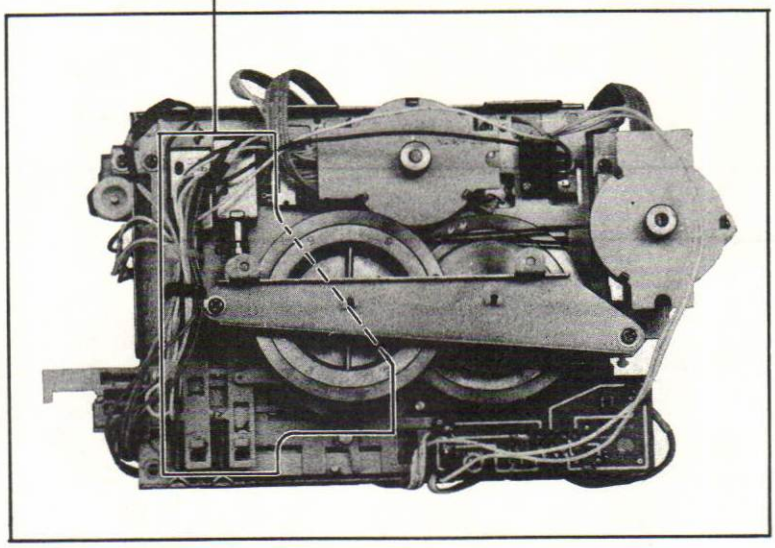

**Direction Plate Positoin Adjustment**

**– Stop Mode –**

1. Turn the rotary gear by hand in the direction shown by the arrow to set the head in the reverse position.
2. Loosen the adjustment screw and move the direction plate in the direction shown by the arrow Ⓐ.
3. Insert the pole pieces in the solenoids simultaneously and turn the flywheel (R) clockwise. Therefore the direction plate is positioned properly for forward mode and then tighten the screw.
4. Release both the pole pieces.
5. Insert the pole piece in the head solenoid and turn the flywheel in the direction shown by the arrow until the head sets in the reverse position. At this moment, make sure that the clearance ⓐ is less than 1.5 mm (1/16″) and there is a clearance between the bilateral-head gear and the reverse slider.
6. Make the forward mode in the same manner as mentioned in step 3 and confirm that the clearance ⓑ is 0 – 0.5 mm (0 – 1/64″) and there is a clearance between the bilateral head gear and the reverse slider.

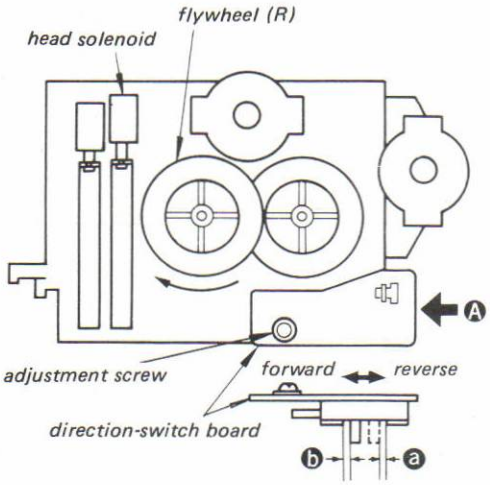


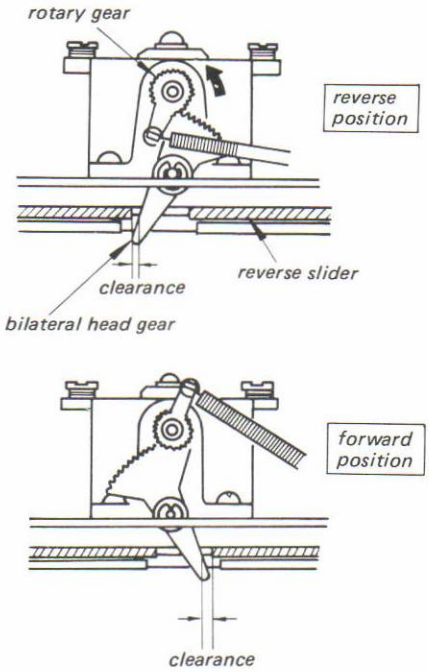


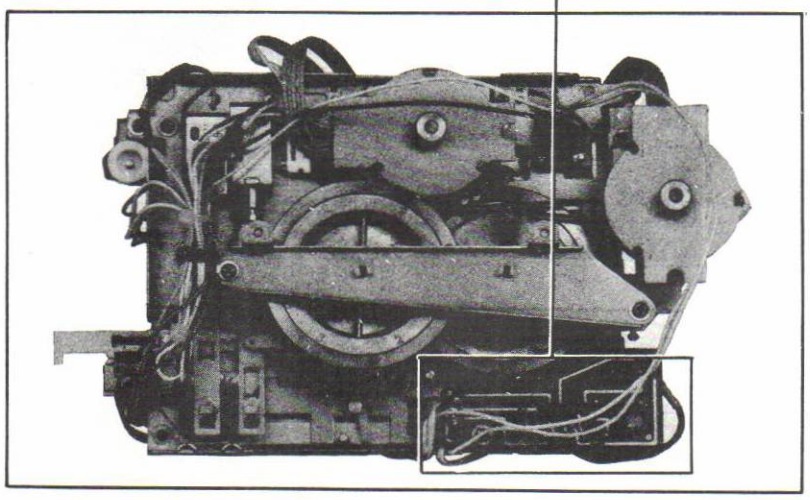

## 3-2. ELECTRICAL ADJUSTMENTS

**Note:** The adjustment should be performed in the order given in this service manual.
The adjustments should be performed for both L-CH and R-CH.

BIAS and TAPE switch settings in accordance with tape used are as follows.

| Tape | BIAS switch | TAPE switch |
|---|---|---|
| CS-10 | NORM | I (NORMAL) |
| CS-25 | NORM | II ($CrO_2$) |
| CS-30 | NORM | III (Fe-Cr) |
| CS-40 | NORM | IV (METAL) |

Switches and controls should be set as follows unless otherwise specified.

| | |
|---|---|
| DOLBY NR switch: | OFF |
| TAPE (EQ) switch: | NORM |
| BIAS switch: | NORM |
| LINE OUT/PHONES LEVEL: | "0" (fully clockwise) |
| TIMER switch: | OFF |
| MEMORY switch: | OFF |
| REC MUTE switch: | OFF |
| DIRECTION MODE switch: | – |

Standard Record:

Supply the standard input signal level to the input jack and set the REC LEVEL control to obtain the standard output signal level.

Standard Input Level

| | MIC | LINE IN |
|---|---|---|
| source impedance | 300 Ω | 10 kΩ |
| input level | –60 dB (0.775 mV) | –10 dB (0.25 V) |

Standard Output Level

| | LINE OUT FIXED | HEADPHONES |
|---|---|---|
| load impedance | 47 kΩ | 8 Ω |
| output level | – 5 dB (0.44 V) | |

*Table 1. Torques and Tape Speed vs. Ambient Temperature*

| Ambient Temperature | Normal or Reverse Forward Torque | Normal or Reverse Fast-Forward Torque | Tape Speed |
|---|---|---|---|
| –3 to 3 °C (27 to 37 °F) | 60 to 70 g·cm (0.84 to 0.97 oz·inch) | 195 to 215 g·cm (2.71 to 2.98 oz·inch) | 2990 ± 10 Hz |
| 2 to 8 °C (36 to 46 °F) | 56 to 66 g·cm (0.78 to 0.91 oz·inch) | 190 to 210 g·cm (2.65 to 2.91 oz·inch) | 2992 ± 10 Hz |
| 7 to 13 °C (45 to 55 °F) | 52 to 62 g·cm (0.73 to 0.86 oz·inch) | 185 to 205 g·cm (2.57 to 2.84 oz·inch) | 2994 ± 10 Hz |
| 12 to 18 °C (54 to 65 °F) | 48 to 58 g·cm (0.67 to 0.80 oz·inch) | 180 to 200 g·cm (2.50 to 2.77 oz·inch) | 2996 ± 10 Hz |
| 17 to 23 °C (63 to 73 °F) | 44 to 54 g·cm (0.62 to 0.75 oz·inch) | 175 to 195 g·cm (2.43 to 2.75 oz·inch) | 2998 ± 10 Hz |
| 22 to 28 °C (72 to 83 °F) | 40 to 50 g·cm (0.56 to 0.69 oz·inch) | 170 to 190 g·cm (2.37 to 2.64 oz·inch) | 3000 ± 10 Hz |
| 27 to 33 °C (81 to 92 °F) | 37 to 47 g·cm (0.52 to 0.65 oz·inch) | 165 to 185 g·cm (2.30 to 2.57 oz·inch) | 3002 ± 10 Hz |
| 32 to 38 °C (90 to 100 °F) | 34 to 54 g·cm (0.48 to 0.75 oz·inch) | 160 to 180 g·cm (2.23 to 2.50 oz·inch) | 3004 ± 10 Hz |
| 37 to 43 °C (99 to 109 °F) | 31 to 41 g·cm (0.43 to 0.56 oz·inch) | 155 to 175 g·cm (2.16 to 2.43 oz·inch) | 3006 ± 10 Hz |

**Note:**

1. $°C = \frac{5}{9}(°F - 32)$ or $°F = \frac{9}{5}°C + 32$
2. 1 oz·inch = 72 g·cm
3. Be sure to perform the normal or reverse forward torque adjustment first before performing the normal or reverse fast-forward torque adjustment. The normal or reverse fast-forward torque's value changes in proportion to the changed amount of the normal or reverse forward torque.
4. Be sure to run the set with a tape cassette installed for about three to five minutes before performing the normal or reverse forward/fast-forward torque adjustments and measurements. When the set is turned on from the cold start (the reel motor is cooled), the forward torque is about 5 g·cm larger and the fast-forward torque is about 10 g·cm larger than the value given above. When the set has been running over 20 minutes, on the contrary, these torques are about 3 g·cm and 5 g·cm smaller than those given above respectively.



### Capstan Motor Adjustment

(Refer to Table 1 on page 41.)

1. Set the test switch SW901 to the test side.

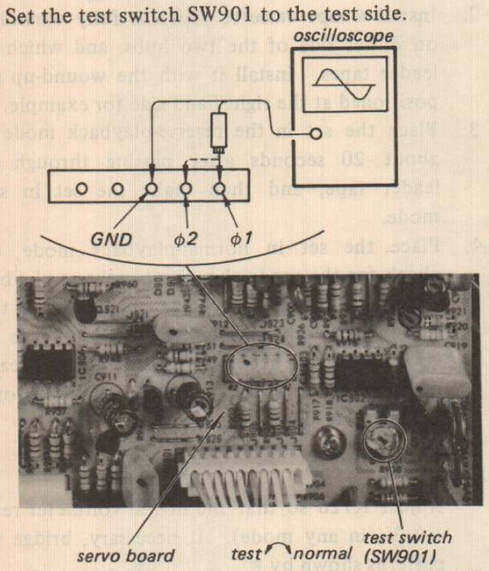


| Terminal | Adjust | Specifications |
|---|---|---|
| φ 1 | RV902 | 4 Vp-p |
| φ 2 | RV903 | 4 Vp-p |

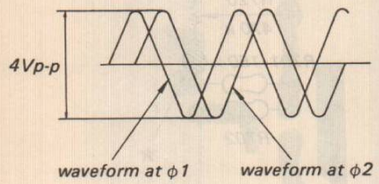


2. Set the test switch back to the normal side.

Adjustment Location:
*– Servo Board –*

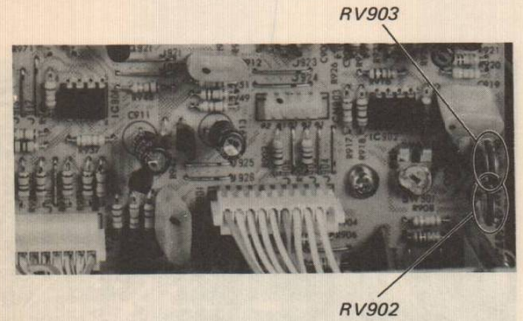


### Reel Motor Adjustment

(Refer to Table 1 on page 41.)

1. Place the set in forward playback mode with a cassette loaded.

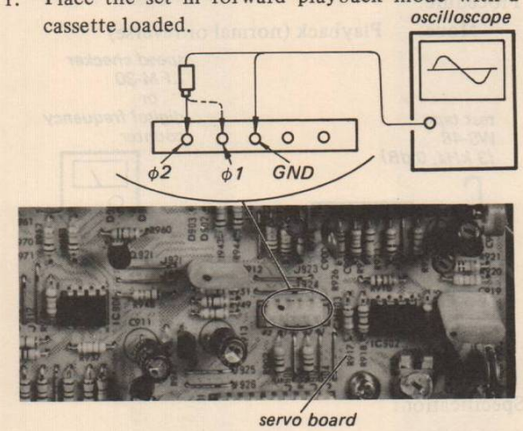


a)

| Terminal | Adjust | Specifications |
|---|---|---|
| φ 1 | RV906 | A = B |
| φ 2 | RV908 | A = B |

b) Adjust RV910 so that the voltages at φ1 and φ2 become equal.

2. Place the set in mode without loading a cassette.

| Terminal | Adjust | Specifications |
|---|---|---|
| φ 1 | RV907 | A = B |
| φ 2 | RV909 | A = B |

3. Install the torque meter CQ-101A and adjust RV905 to obtain 45 ± 8 g·cm (0.62 ± 0.11 oz·inch) torque in forward-playback mode.
   Make sure that the reverse-playback torque is 42–55 g·cm (0.58–0.76 oz·inch).
4. Install the torque meter CQ-201B and run the set in normal fast forward mode.
5. Adjust RV904 so that the torque meter reads 180 ± 15 g·cm (2.5 ± 0.2 oz·inch).

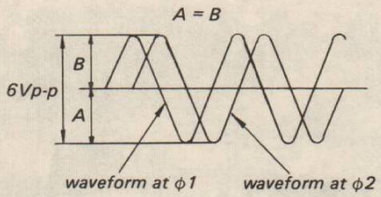


Adjustment Location:
*– Servo Board –*

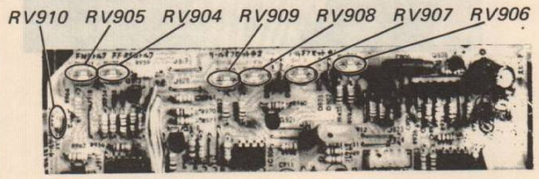

TC-K77R


### Tape Speed Adjustment

(Refer to Table 1 on page 41.)

Procedure:

Mode: Playback (normal or reverse)

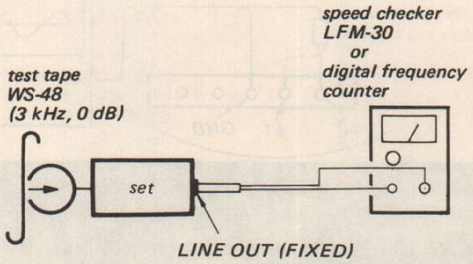


Adjust RV901 to obtain the specified values.

Specification:

| Speed checker | Digital frequency counter |
|---|---|
| −0.7 – +0.7 % | 2,980 – 3,020 Hz |

Frequency difference between the readings at the beginning and end of tape should be within 0.7 % (20 Hz).

Adjustment Location:

*– Servo Board –*

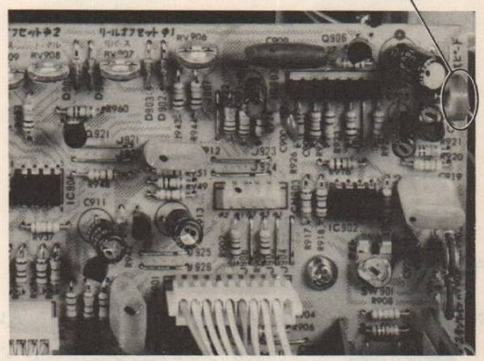


### Auto-Reverse Adjustment

1. Push the DIRECTION MODE switch on.
2. Install a tape cassette which is fully wound up on either side of the two hubs, and which has leader tapes. Install it with the wound-up side positioned at the right-hand side for example.
3. Place the set in the reverse-playback mode for about 20 seconds after passing through the leader tape, and then make the set in stop mode.
4. Place the set in normal-playback mode, and check for the mode changing to reverse playback when the leader tape comes to the leftside tape sensor. When the auto-reverse operation is not good, the set becomes in the automatically-reversed mode at the tape end passing through the whole leader tape length.

Procedure:

Adjust R726 so that the digital voltmeter reads 1.0 V (in any mode). If necessary, bridge the patterns shown by ★.

Adjustment Location:

*– Servo Board –*

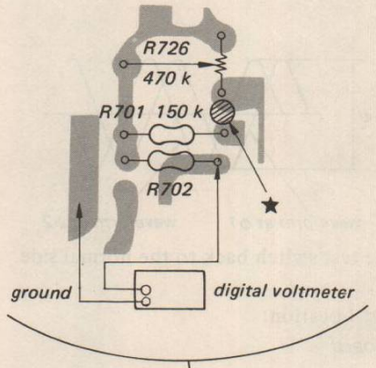


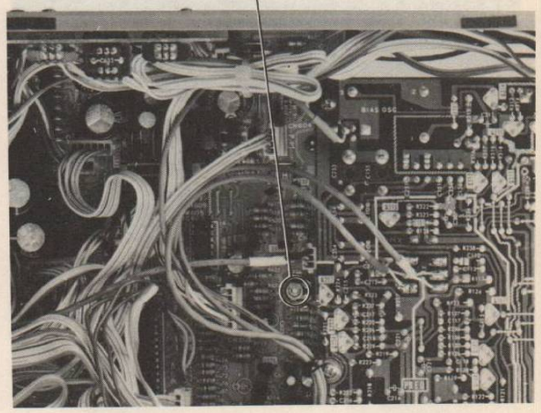



### Record/playback Head Azimuth Adjustment

Procedure:

1. Mode: Playback

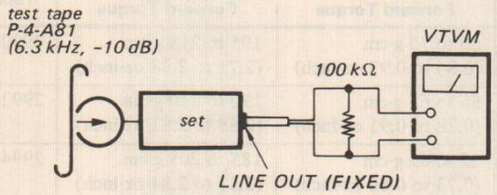


2. Turn the adjustment screw for the maximum output levels. If these levels do not match, turn the adjustment screw until both of output levels match together within 0.5 dB.

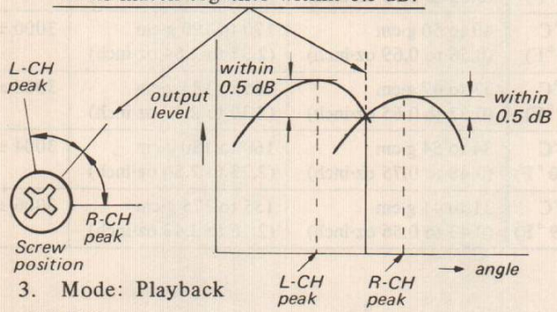


3. Mode: Playback

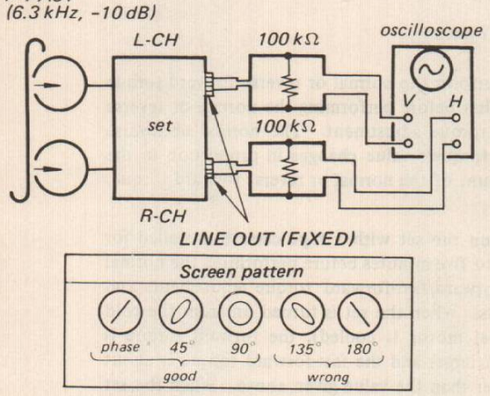


Adjustment Location:

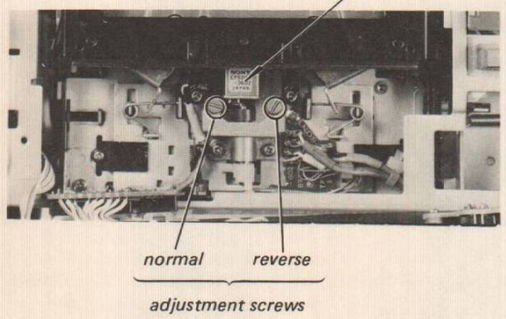


### Playback Level Adjustment

Procedure:

1. Mode: Playback

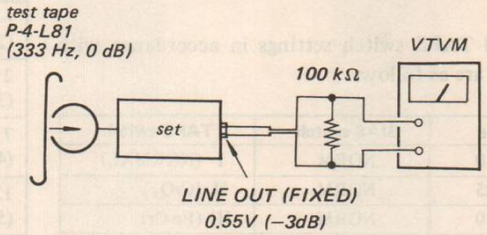


Adjust RV102 (L-CH) and RV202 (R-CH) to obtain the specified values.

Specification:

LINE OUT level: 0.52–0.58 V
(−3.5 to −2.5 dB)

Check that LINE OUT level does not change in playback mode while changing the mode from playback to stop several times.

Adjustment Location:

*– Record/Playback Board –*

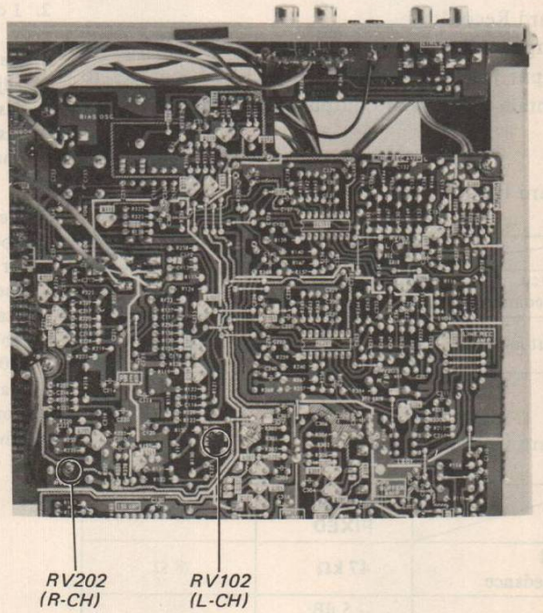

### Record Bias Adjustment

Procedure:

1. Mode: Standard record (See page 41.)

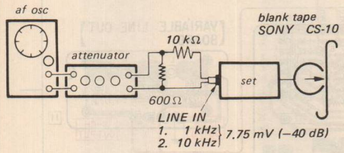


2. Mode: Playback

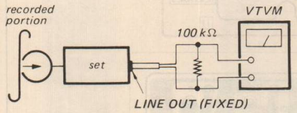


Adjust C255 (L-CH) and C255 (R-CH) to make 10 kHz and 1 kHz signal output levels equal.

Adjustment Location: — *Record/Playback Board* —

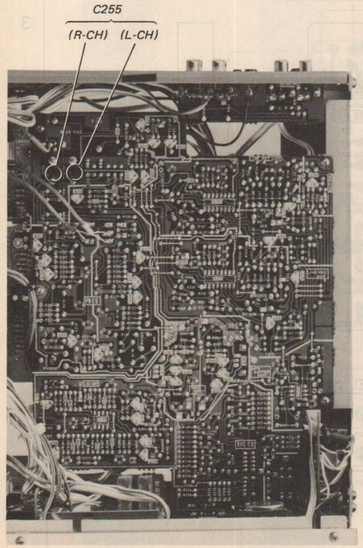


### Record Level Adjustment

Procedure:

1. Mode: Standard record (See page 41.)

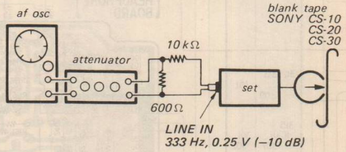


2. Mode: Playback (normal and reverse)

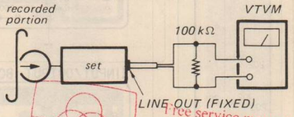


Adjust RV103 (L-CH) and RV203 (R-CH) to obtain the specified values.

Specification:

| Tape | LINE OUT level |
|---|---|
| CS-10 | 0.39 – 0.49 V (−6 to −4 dB) |
| CS-25 | 0.38 – 0.52 V |
| CS-30 | (−6.5 to −3.5 dB) |

Level difference between normal and reverse mode: less than 1.5 dB

Adjustment Location:

— *Record/Playback Board* —

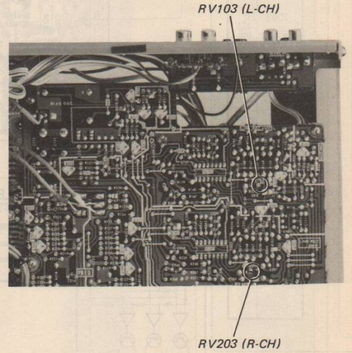






### Playback Frequency Response Adjustment

Procedure:

Mode: Playback

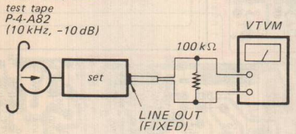


Solder or unsolder the patterns at Ⓐ to obtain specified values.

Specification:

| TAPE switch | LINE OUT (FIXED) level |
|---|---|
| I (NORMAL) | 120 – 250 mV (−16 to −10 dB) |
| II (Fe-Cr) | 77 – 170 mV (−20 to −13 dB) |

Adjustment Location:

— *Record/Playback Board* —

| Bridge patterns | LINE OUT (FIXED) level |
|---|---|
| (open) | down |
| Ⓐ | up |


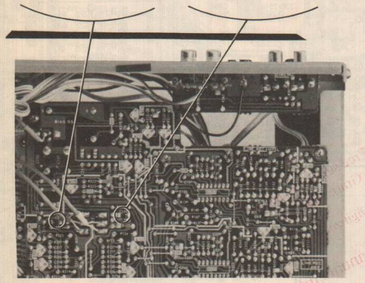

### Meter Level Adjustment

Procedure:

1. Mode: Standard record (See page 41.)

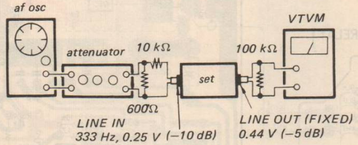


2. Adjust RV104 (L-CH) and RV204 (R-CH) to obtain 0 VU reading on the level meter.
3. Reduce the LINE IN input level to 2.7 mV (−49 dB).
   Check if the −40 dB is not indicated. When −40 dB is indicated, adjust by bridging the patterns for R185 (L-CH) and R285 (R-CH).

Adjustment Location:

— *Record/Playback Board* —

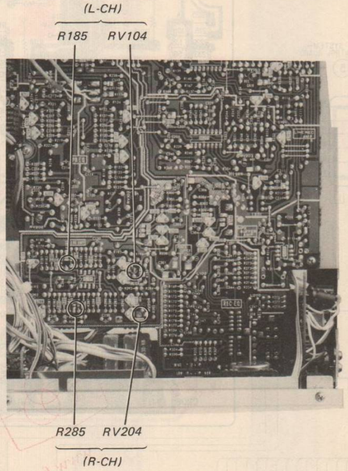




## MEMO

# SECTION 4
# DIAGRAMS

## 4-1. MOUNTING DIAGRAM – Record/Playback Amp Section –

*– Conductor Side –*

**Replacement Semiconductors**

For replacement, use semiconductors except in ( ).

**Q101, 201: 2SC1345**

**Q102, 202, Q104, 204, Q308 : 2SA1138**

**Q103, 203, Q307 : 2SC2676**

**Q105, 205, Q106, 206, Q108, 208, Q109, 209, Q110, 210, Q305, Q311, 312, Q314, 315, Q402, Q107, 207: 2SC1364**

(2SC458A)

**Q301, 302: 2SK30A**

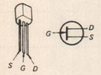

**Q303: 2SD414**

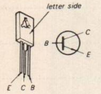


**Q304: 2SB548**

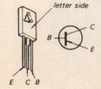


**Q306, 309, Q310, 313 : 2SA1027R (2SA1026)**

**Q401: NI3T1**

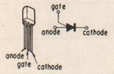


**Q403–406: 2SA952**

**IC101, 201: CX174**


**IC102: μPC4557C**
**IC103: NJM4560D**
**IC104: μPC4558C**


**IC401: MSL9351**


**D102–105, D202–205, D401 : 1S1555**


**D304, 305: HZ6B2L**


**Note:**

- Color code of sleeving over the end of the jacket.


- Ⓕ : fusible resistor.
- : B + pattern
- : B – pattern
- : signal path
- : L-CH signal path
- : R-CH signal path



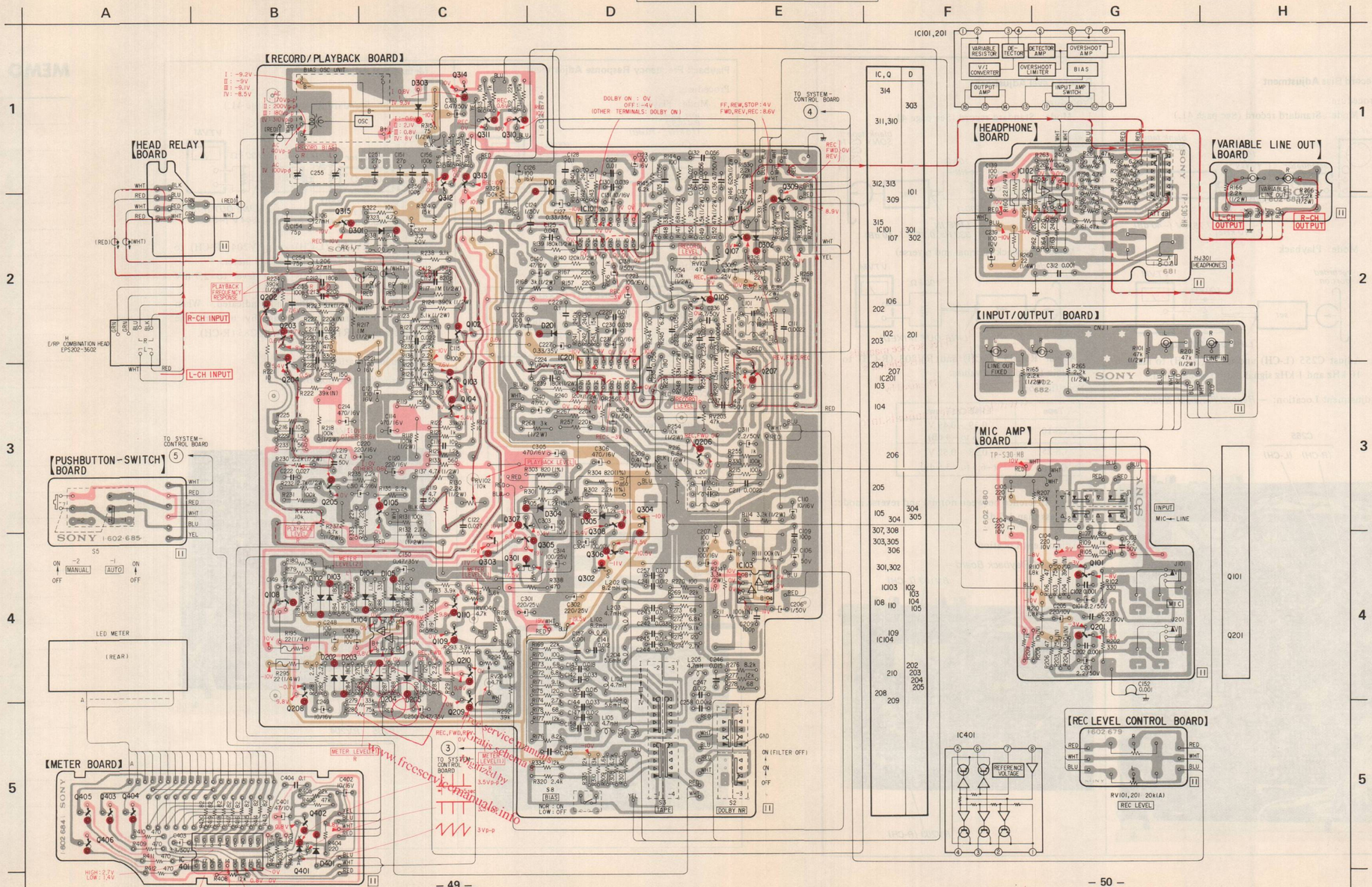

## 4-2. SCHEMATIC DIAGRAM — Record/Playback Amp Section —

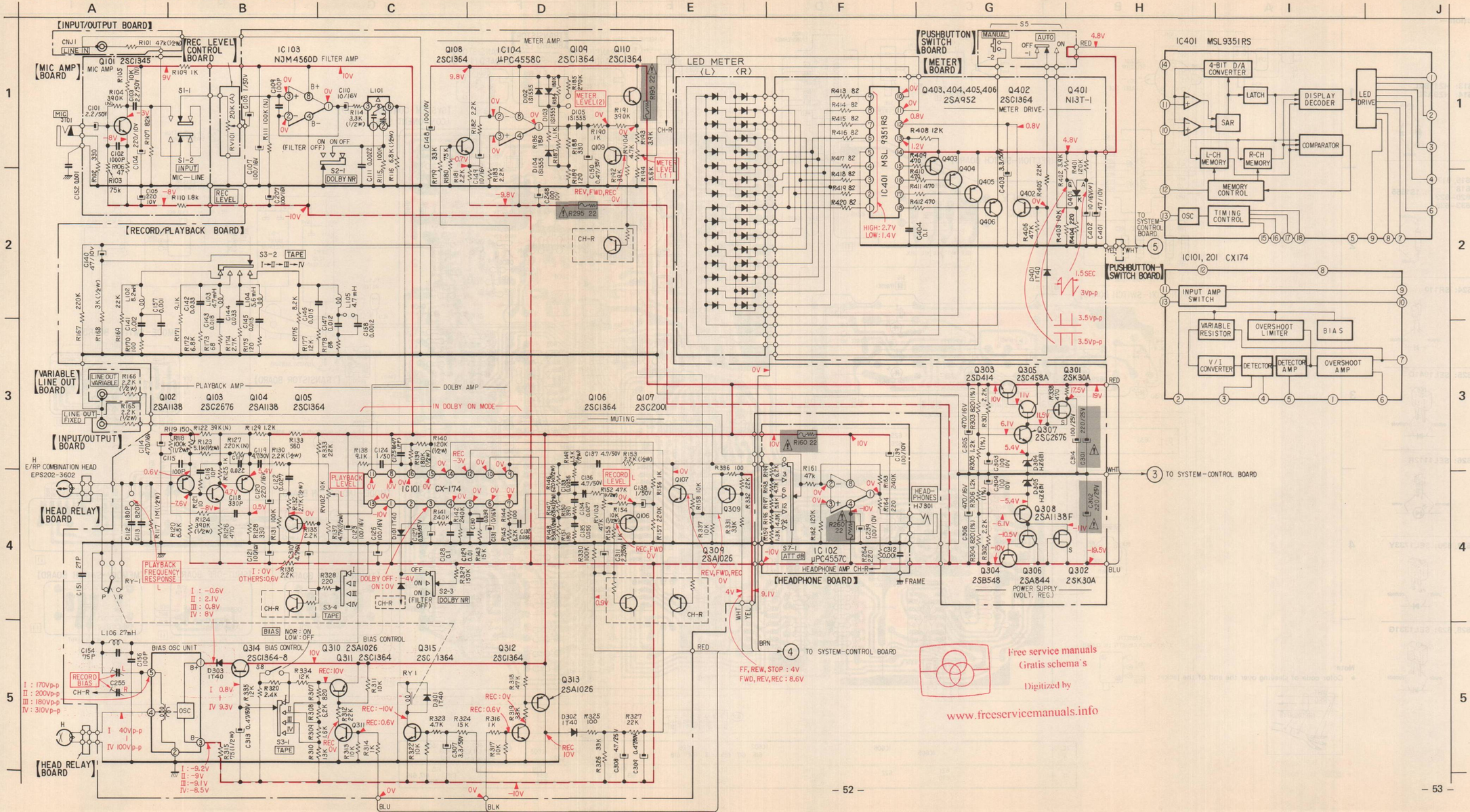




**Note:**

- Components for right channel have same values as for left channel. Reference numbers are coded from 201.
- (1 %): ±1 % tolerance.
- All capacitors are in μF unless otherwise noted. pF : μμF 50WV or less are not indicated except for electrolytics and tantalums.
- All resistors are in ohms, 1/8 W unless otherwise noted. kΩ: 1000 Ω, MΩ: 1000 kΩ
- : fusible resistor.
- (N) : low-noise resistor.
- (LN) : low-noise capacitor.
- △ : internal component.
- : panel designation.
- : adjustment for repair.
- : B+ bus.
- : B- bus.
- Voltages are dc with respect to ground unless otherwise noted.
- Readings are taken in stop mode with a VOM (20 kΩ/V) unless otherwise noted.
- Voltage variations may be noted due to normal production tolerances.
- AC voltage readings in the bias oscillator are taken with an oscilloscope.
- Switch

| Ref. No. | Switch | Position |
|---|---|---|
| S1 | INPUT | LINE |
| S2 | DOLBY NR | OFF |
| S3 | TAPE | TYPE I (NORM) |
| S4 | —— | —— |
| S5 | PEAK HOLD RESET | OFF |
| S6 | —— | —— |
| S7 | ATT dB | 0 |
| S8 | BIAS | NORM |

**Note: The components identified by shading and mark ⚠ are critical for safety. Replace only with part number specified.**

## 4-3. MOUNTING DIAGRAM – System-Control Section –
*– Conductor Side –*

### Replacement Semiconductors

For replacement, use semiconductors except in ( ).

**Q601: 2SB548**

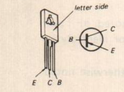


**Q603: 2SC1173**

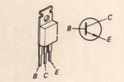


**Q604: 2SD414**

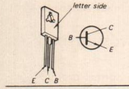


**Q605: 2SA473 (2SA755)**

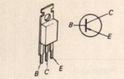


**Q606: 2SA684 (2SA773)**

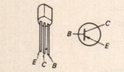


**Q602, 607, Q613–618: 2SC1364 (2SA1815)**

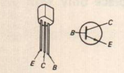


**Q608, 610: 2SC2001 (2SD1012)**

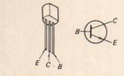


**Q609, 611: 2SA1027R (2SA1026)**

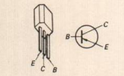


**Q619–622, Q626, 627: 2SC1364**

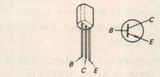


**Q623: NJL5141E**

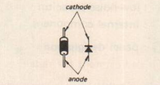


**Q624: PH103**

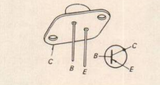


**IC601: μPD547C-074**

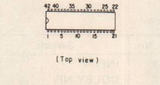


**IC602: TC4019BP**

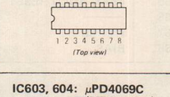


**IC603, 604: μPD4069C (MB84069B)**
**IC605: μPC339C**

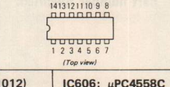


**IC606: μPC4558C**

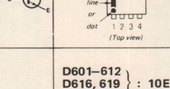


**D601–612, D616, 619, D631, 632: 10E2**


**D613: HZ11B2L**
**D614: HZ9A2L**




**D615, 617, D618, D620–623, D633–635: 1S1555**




**D624: SR110**




**D625: SEL1941D**




**D626: SEL1112R**




**D627, 630: SEL1733Y**




**D628, 629: SEL1331G**




**Note:**
- Color code of sleeving over the end of the jacket.




● : B + pattern
● : B – pattern

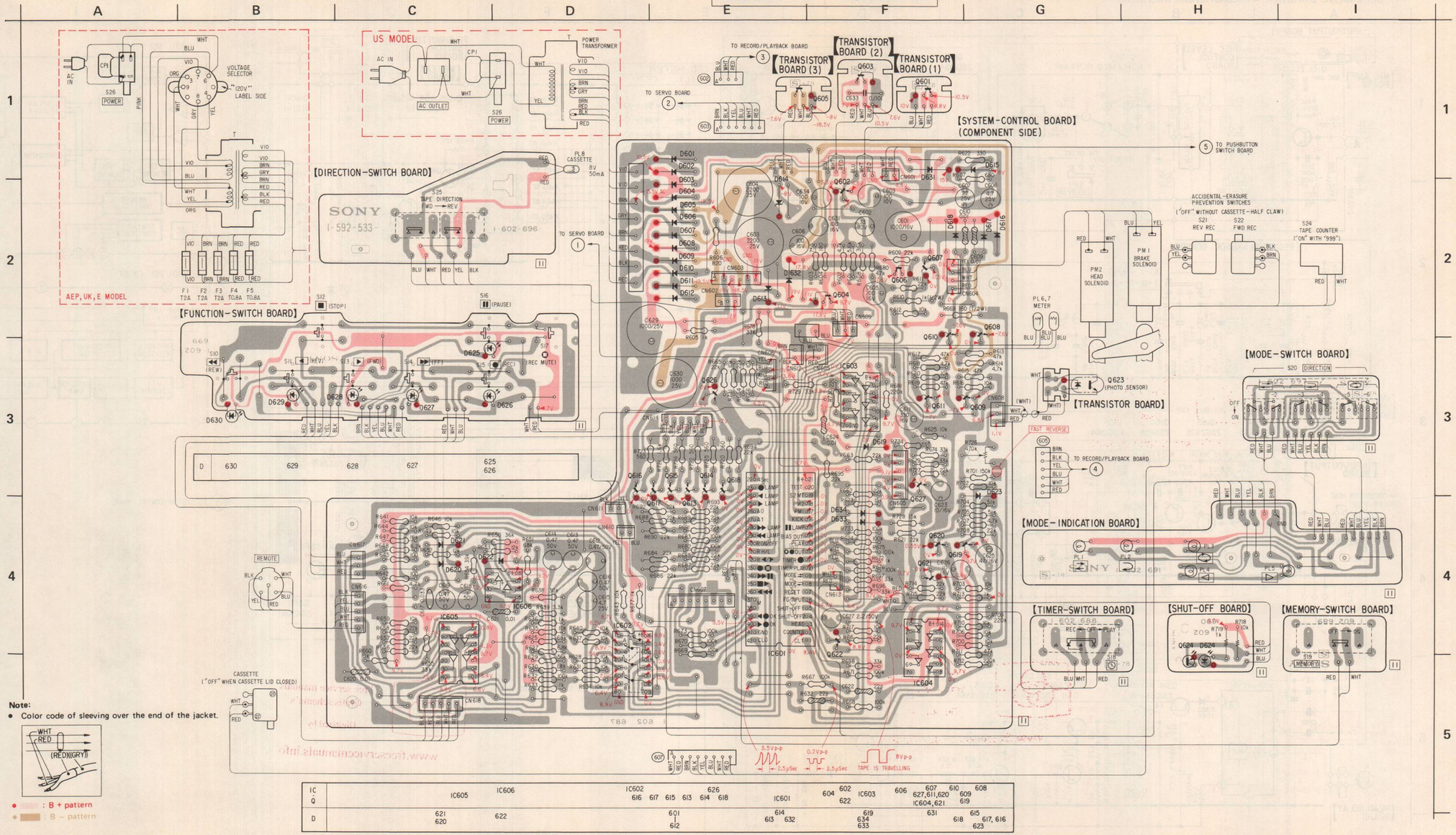

## 4-4. SCHEMATIC DIAGRAM – System-Control Section –

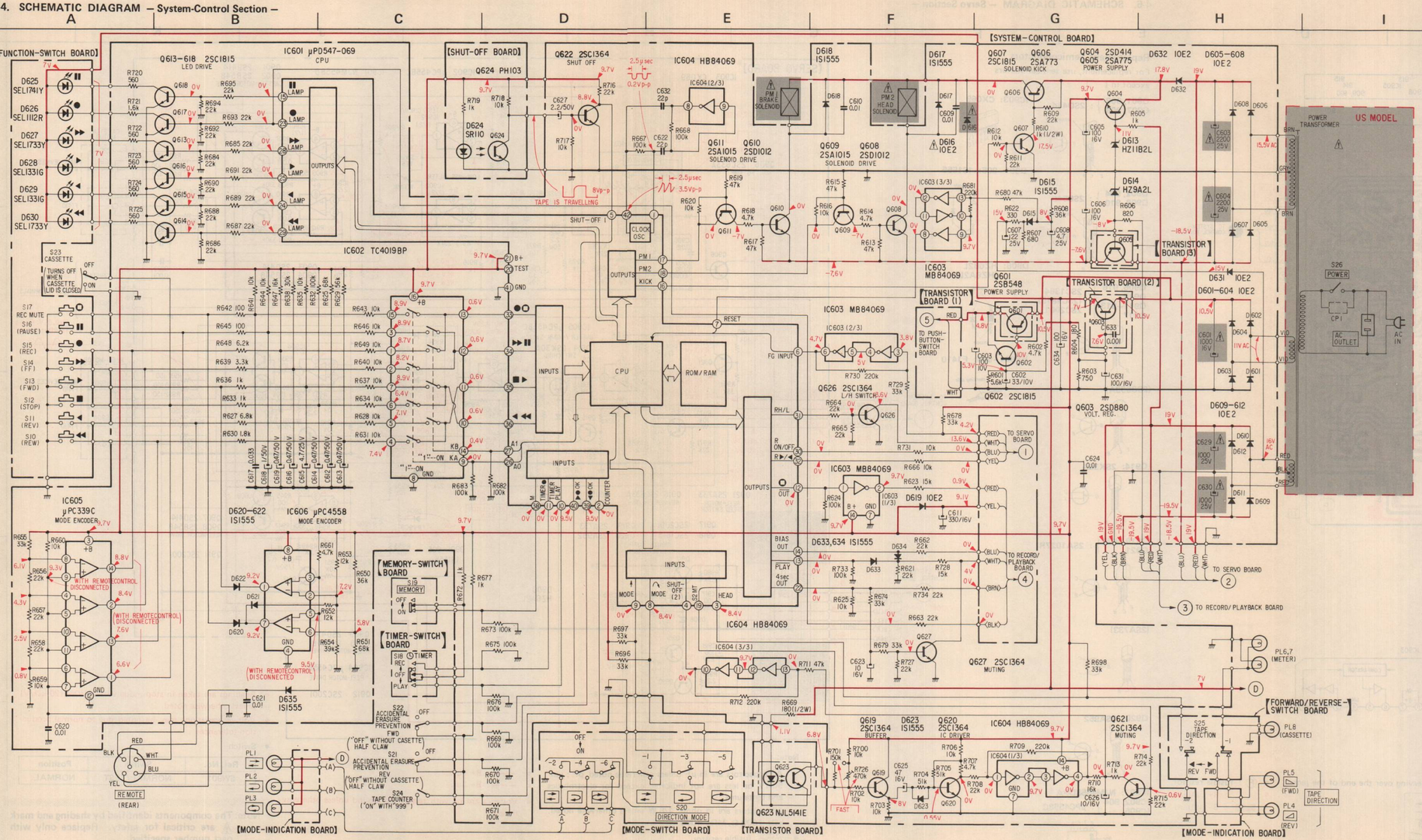


**Note:**

- All capacitors are in μF unless otherwise noted. pF : μμF 50WV or less are not indicated except for electrolytics and tantalums.
- All resistors are in ohms, 1/8 W unless otherwise noted. kΩ: 1000 Ω, MΩ: 1000 kΩ
- ▭ : panel designation.
- ▭ : adjustment for repair.
- ——: B+ bus.
- – – –: B- bus.
- Voltages are dc with respect to ground unless otherwise noted.
- Readings are taken in stop mode with a VOM (20 kΩ/V) unless otherwise noted.
- Voltage variations may be noted due to normal production tolerances.
- Switch

| Ref No. | Switch | Position |
|---|---|---|
| S10 | REWIND | OFF |
| S11 | REVERSE | OFF |
| S12 | STOP | OFF |
| S13 | FORWARD | OFF |
| S14 | FAST FORWARD | OFF |
| S15 | RECORD | OFF |
| S16 | PAUSE | OFF |
| S17 | REC MUTE | OFF |
| S18 | ⏲ | OFF |
| S19 | MEMORY | OFF |
| S20 | DIRECTION MODE | ⇄ |
| S21 | ACCIDENTAL-ERASURE PREVENTION (FWD) | OFF |
| S22 | ACCIDENTAL-ERASURE PREVENTION (REV) | OFF |
| S23 | CASSETTE | OFF |
| S24 | TAPE COUNTER | OFF |

**Note: The components identified by shading and mark ⚠ are critical for safety. Replace only with part number specified.**

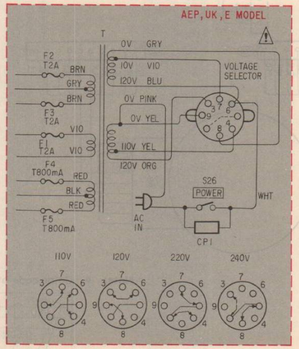

## 4-5. MOUNTING DIAGRAM — Servo Section —

*— Conductor Side —*

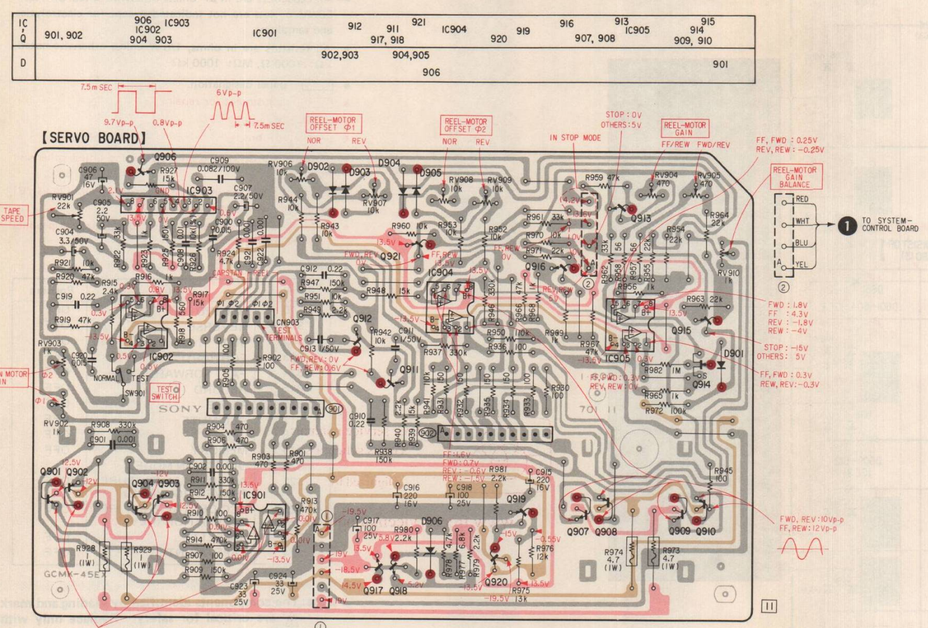


Note: • Color code of sleeving over the end of the jacket.

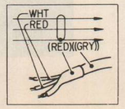


• Ⓕ : fusible resistor.
• : B+ pattern
• : B- pattern



## 4-6. SCHEMATIC DIAGRAM — Servo Section —

**Replacement Semiconductors**

For replacement, use semiconductors except in ( ).

Q901, 903, Q907, 909 : 2SD414

Q902, 904, Q908, 910 : 2SB548

Q906, 916, Q918 : 2SC1364 (2SC1815)
Q911–913, Q917 : 2SC2001

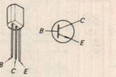

(2SC633A)

Q914: 2SK30A

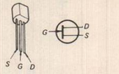

Q919, 915, Q921 : 2SA1027R

(2SA733)

Q920: 2SA952

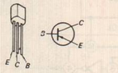

IC901: NJM4558DFA
IC902, 904, IC905 : μPC4558C


IC903: CX069

D901–905: 1S1555

D906: HZ6B2L (HZ6A2L)

HE901–904: F1410

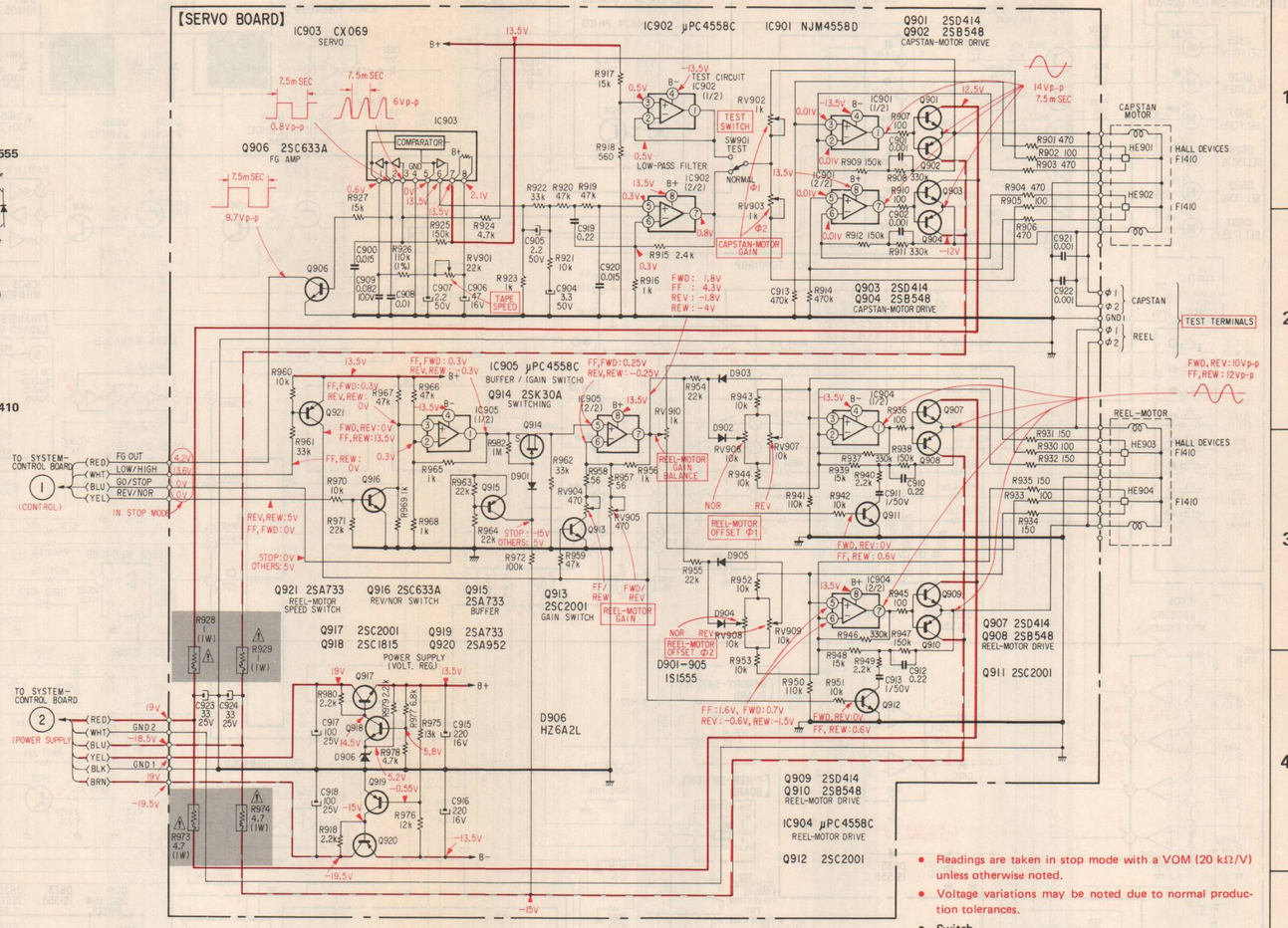


Note:

- All capacitors are in μF unless otherwise noted. pF : μμF 50WV or less are not indicated except for electrolytics and tantalums.
- All resistors are in ohms, 1/8 W unless otherwise noted. kΩ: 1000 Ω, MΩ: 1000 kΩ
- : fusible resistor.
- : adjustment for repair.
- : B+ bus.
- : B- bus.
- Voltages are dc with respect to ground unless otherwise noted.

- Readings are taken in stop mode with a VOM (20 kΩ/V) unless otherwise noted.
- Voltage variations may be noted due to normal production tolerances.
- Switch

| Ref. No. | Switch | Position |
|---|---|---|
| SW901 | NORMAL/TEST | NORMAL |

**Note: The components identified by shading and mark ⚠ are critical for safety. Replace only with part number specified.**

# SECTION 5
# EXPLODED VIEWS

Note:
- Items marked "♠" are not stocked since they are seldom required for routine service. Some delay should be anticipated when ordering these items.
- All screws are Phillips (cross recess) type unless otherwise noted.
  (–) = slotted head
- (□□T) shows the number of coils in spring.

**Note: The components identified by shading and mark ⚠ are critical for safety. Replace only with part number specified.**

(1)

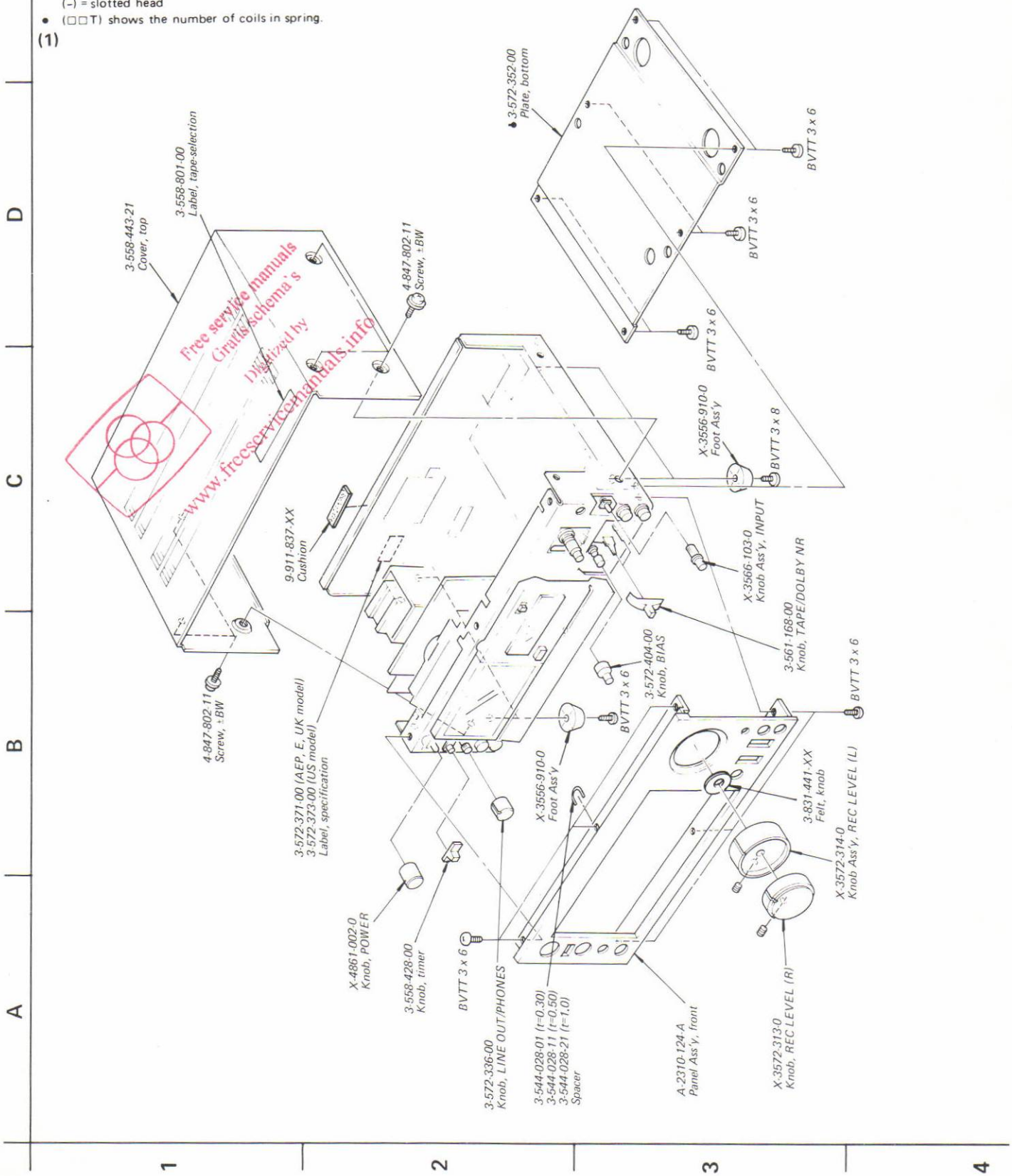

(2)

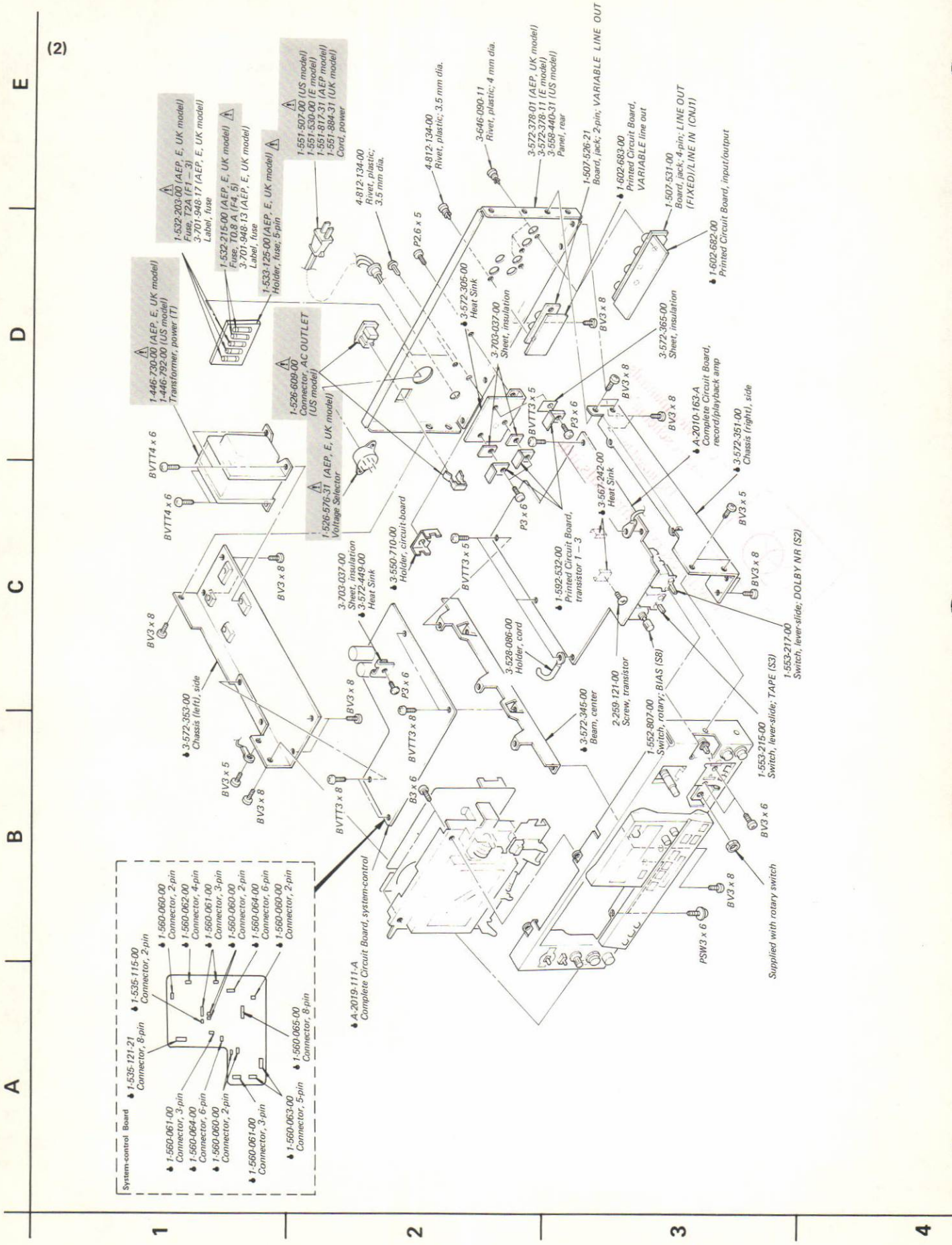

(3)

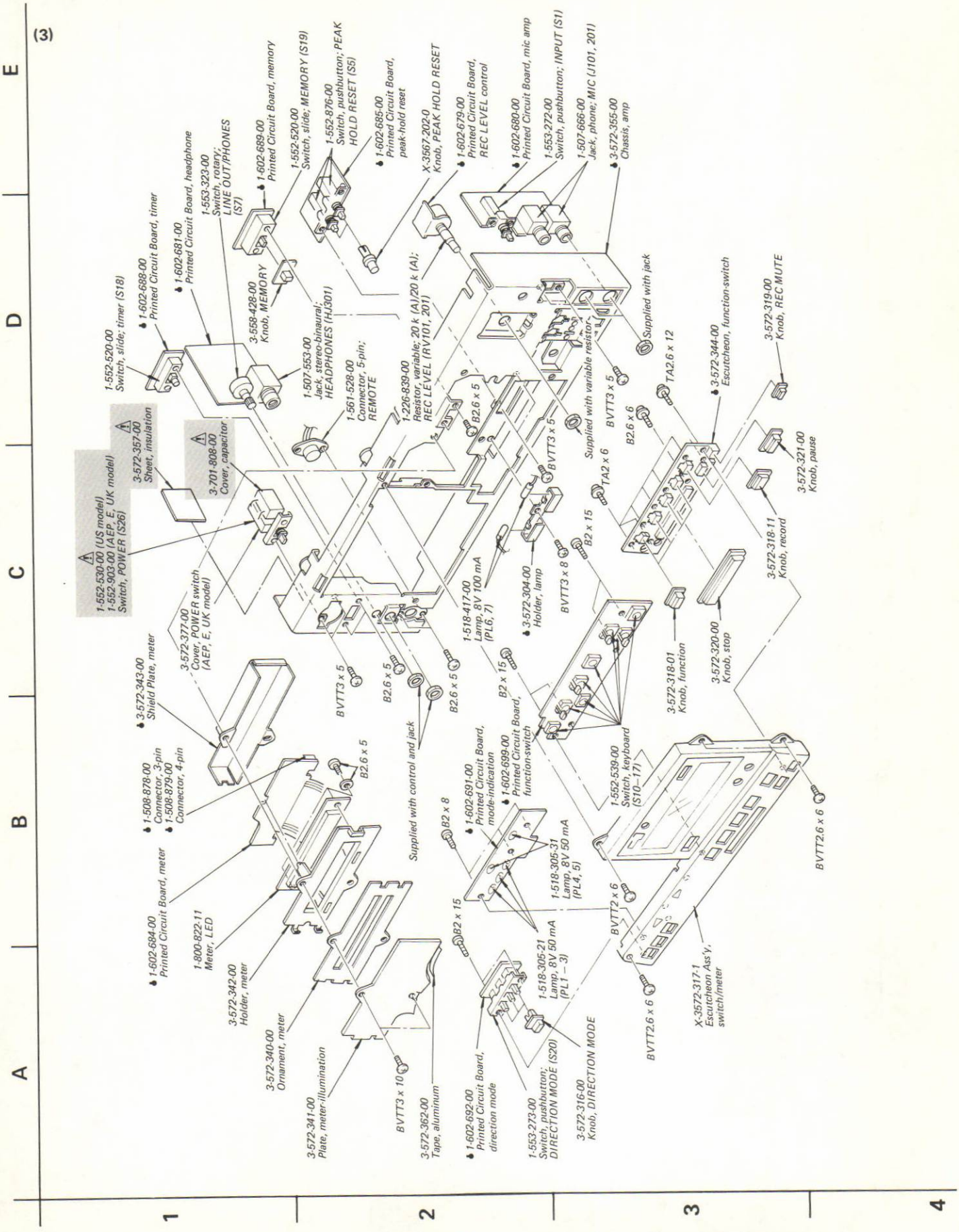

(4)

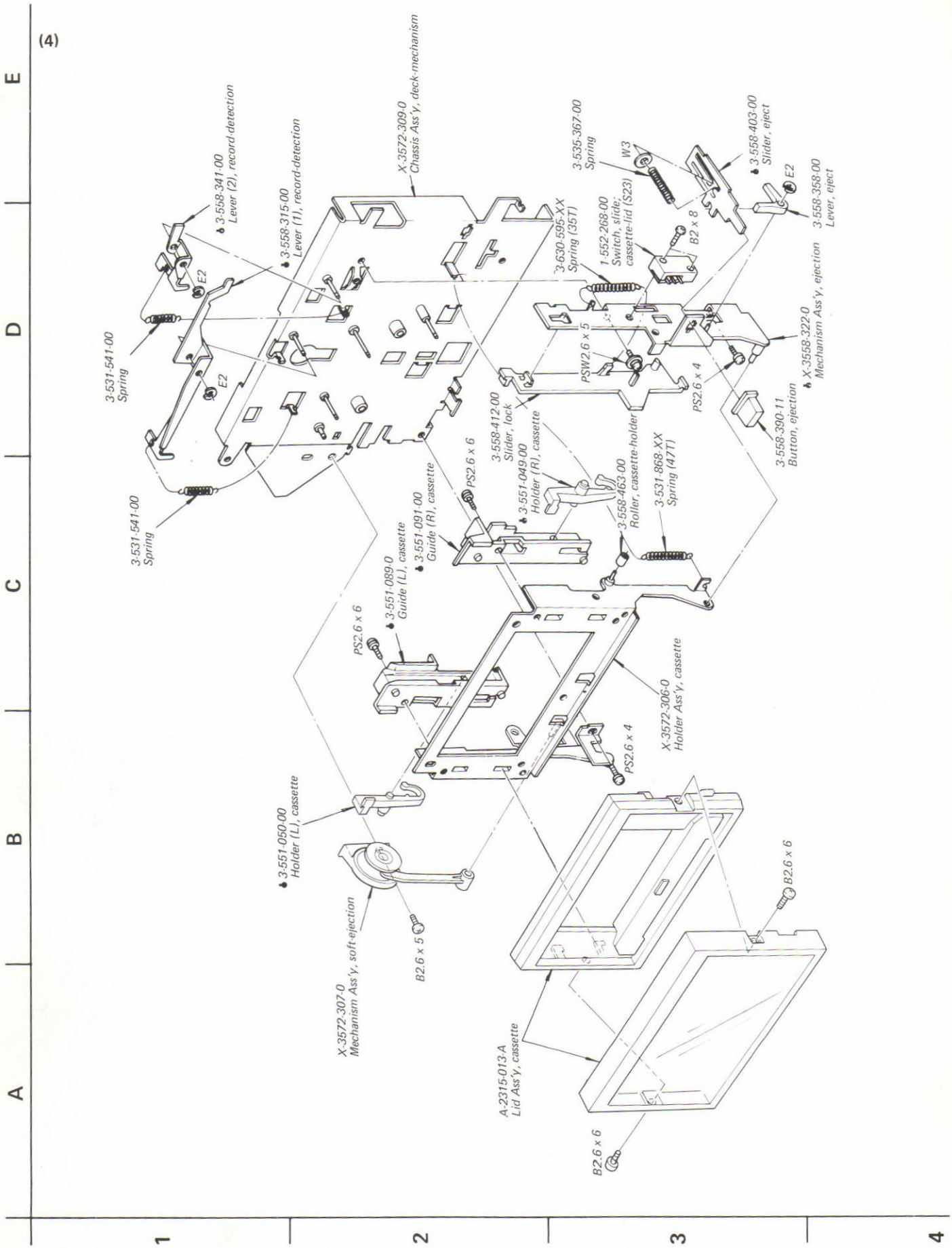

(5)

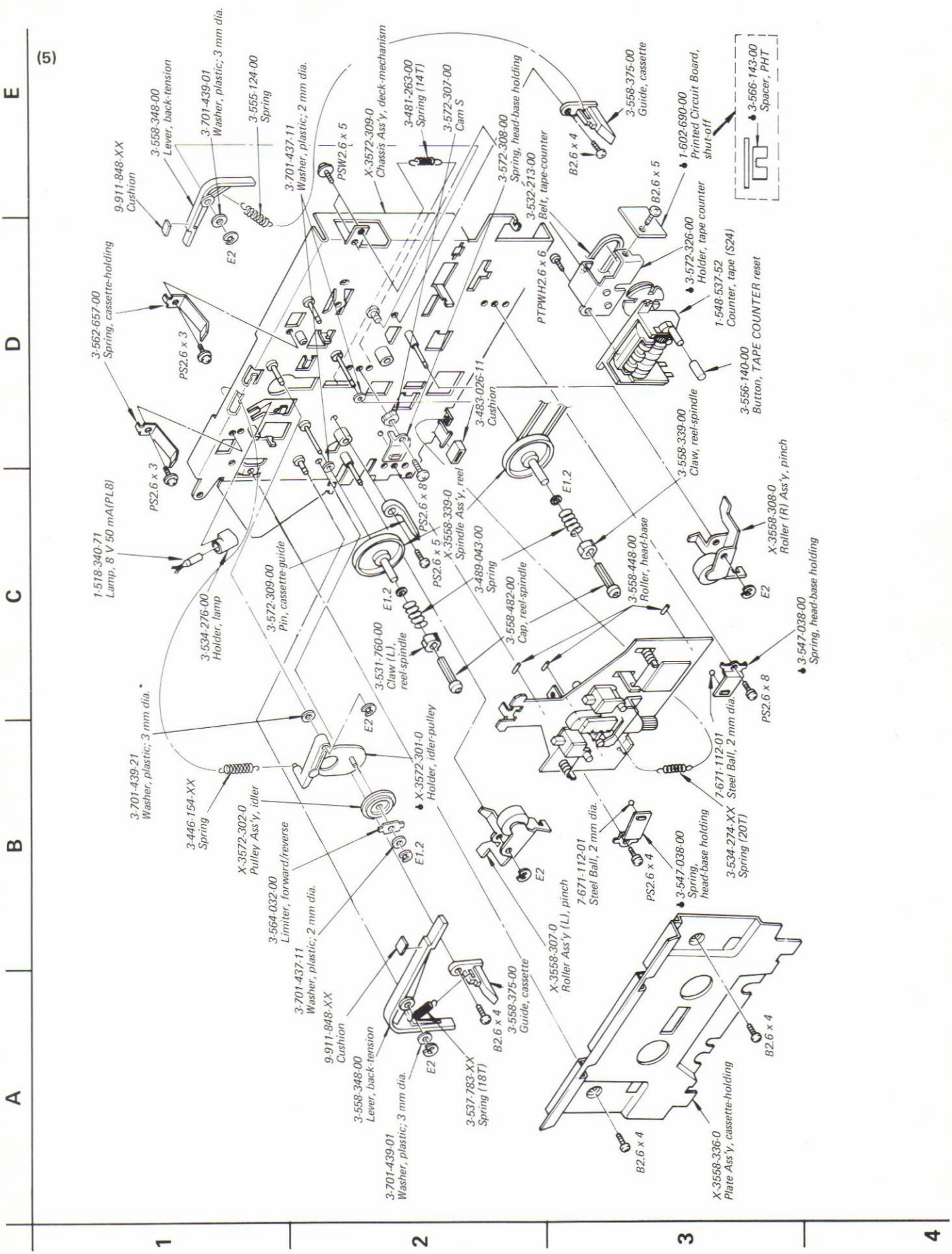

(6)

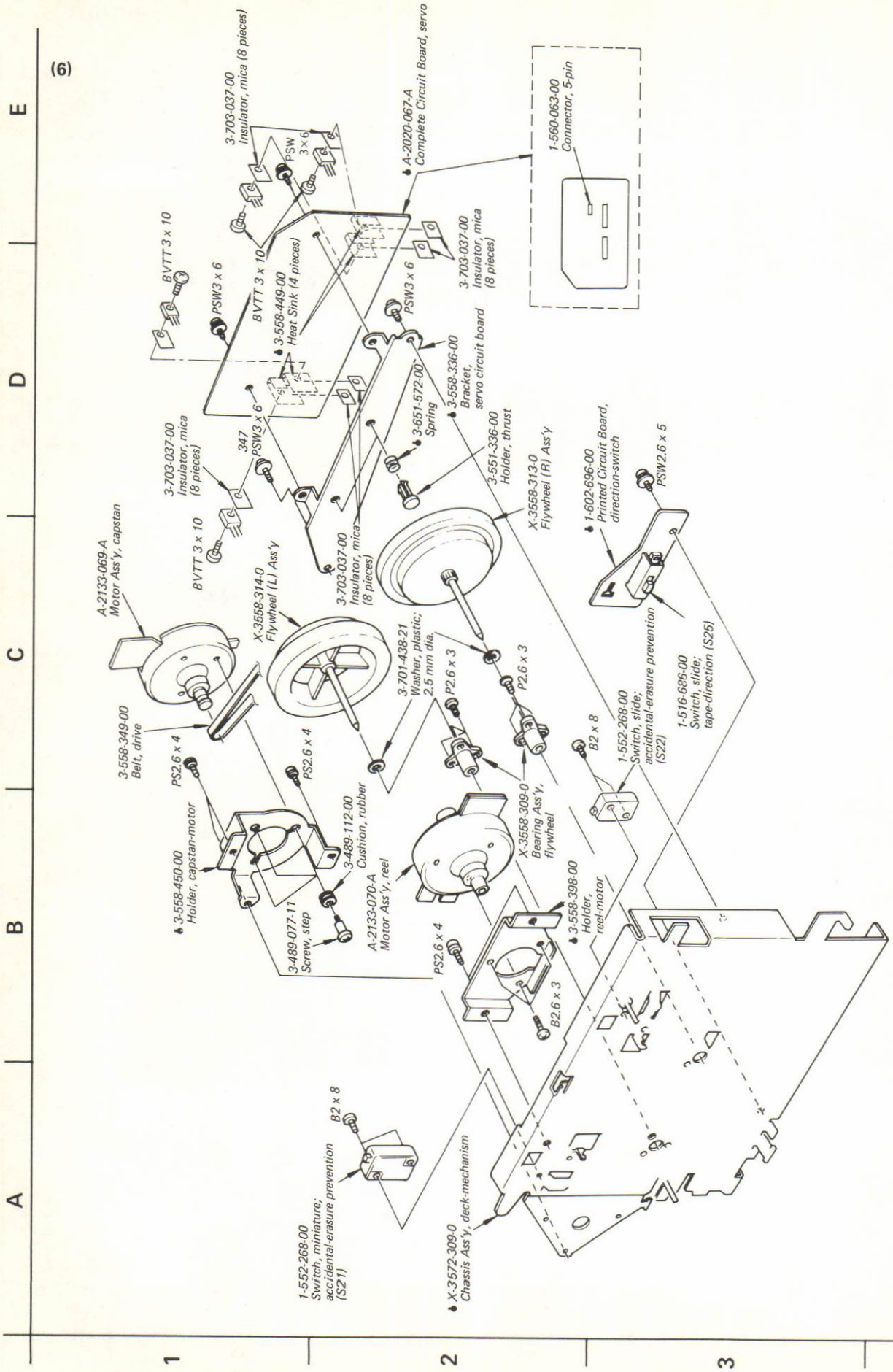

(7)

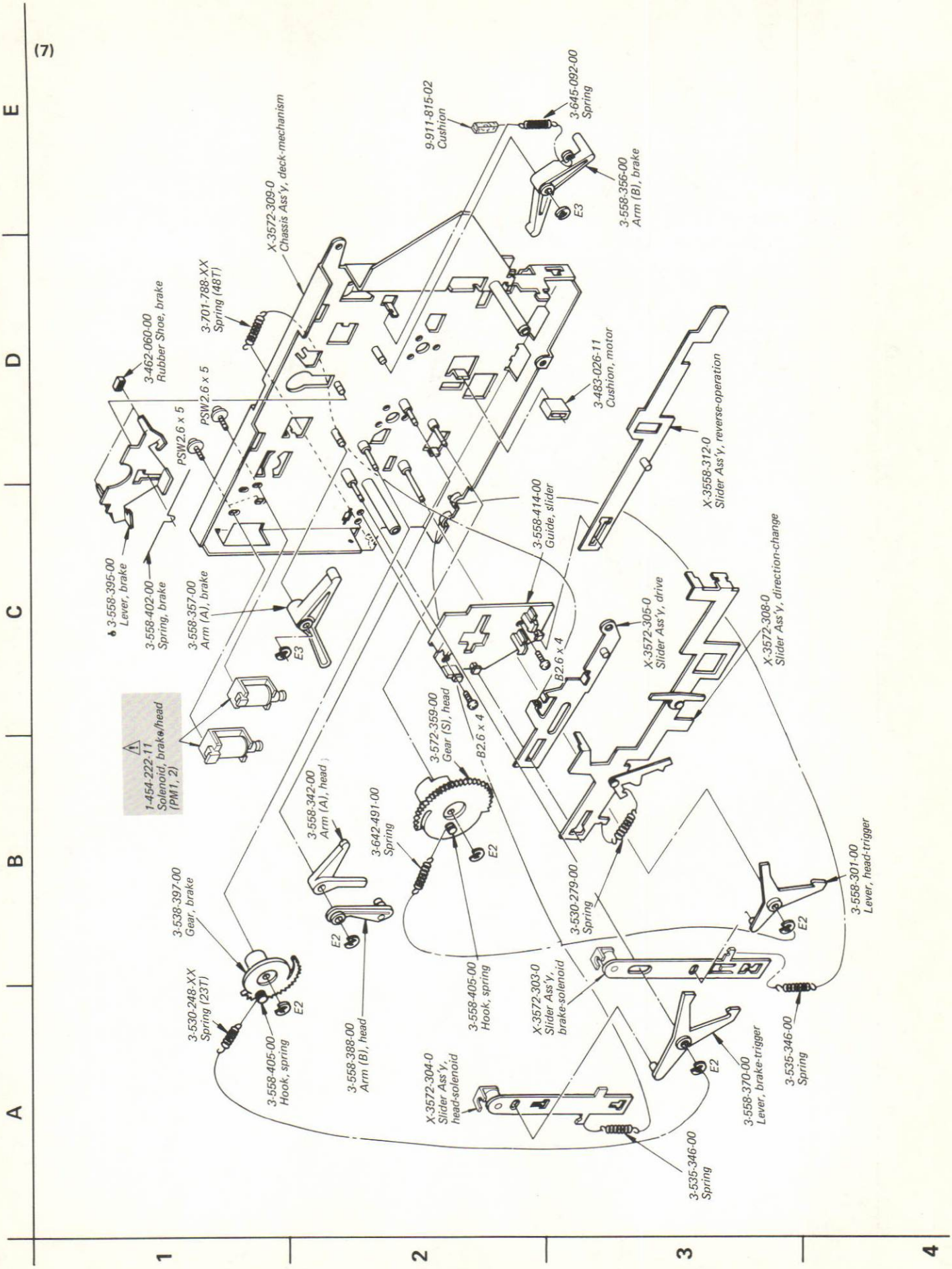

(8)

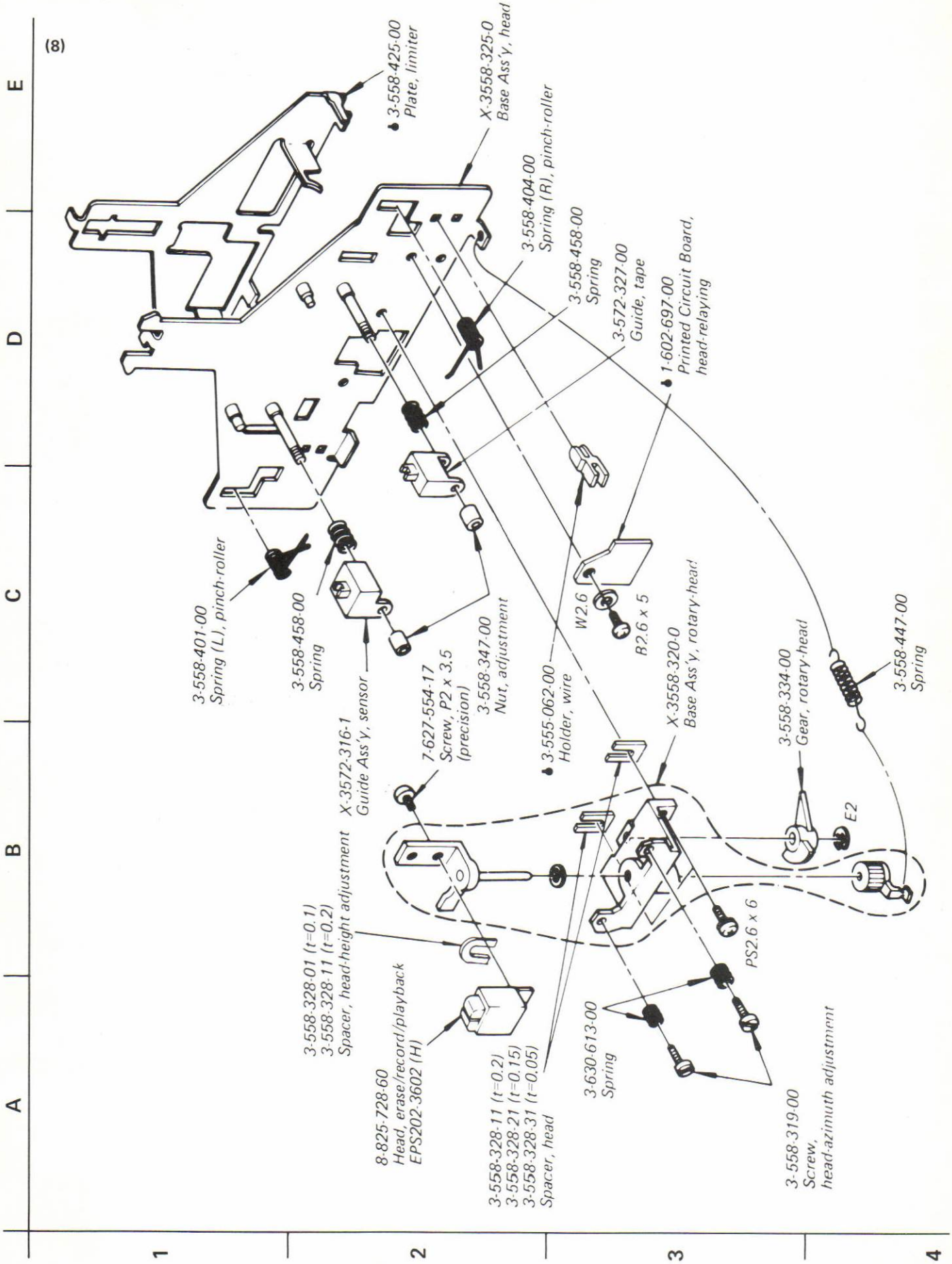

# SECTION 6
# ELECTRICAL PARTS LIST

| Ref. No. | Part No. | Description |
|---|---|---|
| | **SEMICONDUCTORS** | |
| | **Transistors** | |
| Q101, 201 | 8-729-334-58 | 2SC1345 |
| Q102, 202 | 8-729-113-82 | 2SA1138 |
| Q103, 203 | 8-729-167-62 | 2SC2676 |
| Q104, 204 | 8-729-113-82 | 2SA1138 |
| ⇒Q105, 205 | 8-729-663-47 | 2SC1364 |
| ⇒Q106, 206 | 8-729-663-47 | 2SC1364 |
| Q107, 207 | 8-729-100-13 | 2SC2001 |
| ⇒Q108, 208 | 8-729-663-47 | 2SC1364 |
| ⇒Q109, 209 | | |
| ⇒Q110, 210 | | |
| Q301, 302 | 8-729-203-04 | 2SK30A |
| Q303 | 8-729-141-43 | 2SD414 |
| Q304 | 8-729-154-83 | 2SB548 |
| ⇒Q305 | 8-729-663-47 | 2SC1364 |
| ⇒Q306 | 8-729-384-48 | 2SA844 |
| Q307 | 8-729-167-62 | 2SC2676 |
| Q308 | 8-729-113-82 | 2SA1138 |
| ⇒Q309, 310 | 8-729-612-77 | 2SA1027R |
| Q311, 312 | 8-729-663-47 | 2SC1364 |
| Q313 | 8-729-612-77 | 2SA1027R |
| Q314, 315 | 8-729-663-47 | 2SC1364 |
| Q401 | 8-729-101-31 | N13T1 |
| Q402 | 8-729-663-47 | 2SC1364 |
| Q403–406 | 8-729-195-23 | 2SA952 |
| Q601 | 8-729-154-83 | 2SB548 |
| ⇒Q602 | 8-729-663-47 | 2SC1364 |
| Q603 | 8-729-217-34 | 2SC1173 |
| Q604 | 8-729-141-43 | 2SD414 |
| ⇒Q605 | 8-729-247-33 | 2SA473 |
| Q606 | 8-729-468-43 | 2SA684 |
| ⇒Q607 | 8-729-663-47 | 2SC1364 |
| Q608, 610 | 8-729-100-13 | 2SC2001 |
| ⇒Q609, 611 | 8-729-612-77 | 2SA1027R |
| Q613–618 | 8-729-663-47 | 2SC1364 |
| Q619–622 | | |

| Ref. No. | Part No. | Description |
|---|---|---|
| Q623 | 8-719-751-42 | NJL5141E |
| Q624 | 8-729-101-13 | PH103 |
| Q626, 627 | 8-729-663-47 | 2SC1364 |
| Q901, 903 | 8-729-141-43 | 2SD414 |
| Q902, 904 | 8-729-154-83 | 2SB548 |
| ⇒Q906 | 8-729-633-47 | 2SC1364 |
| Q907, 909 | 8-729-141-43 | 2SD414 |
| Q908, 910 | 8-729-154-83 | 2SB548 |
| Q911–913 | 8-729-100-13 | 2SC2001 |
| Q914 | 8-729-203-04 | 2SK30A |
| ⇒Q915 | 8-729-612-77 | 2SA1027R |
| ⇒Q916 | 8-729-633-47 | 2SC1364 |
| Q917 | 8-729-100-13 | 2SC2001 |
| ⇒Q918 | 8-729-663-47 | 2SC1364 |
| ⇒Q919 | 8-729-612-77 | 2SA1027R |
| Q920 | 8-729-195-23 | 2SA952 |
| Q921 | 8-729-612-77 | 2SA1027R |
| | **ICs** | |
| IC101, 201 | 8-759-101-74 | CX174 |
| IC102 | 8-759-145-57 | μPC4557C |
| IC103 | 8-759-745-60 | NJM4560D |
| IC104 | 8-759-145-58 | μPC4558C |
| ⇒IC401 | 8-759-993-51 | MSL9351 |
| IC601 | 8-759-147-74 | μPD547C-074 |
| IC602 | 8-759-240-19 | TC4019BP |
| ⇒IC603, 604 | 8-759-140-69 | μPD4069C |
| IC605 | 8-759-133-90 | μPC339C |
| ⇒IC606 | 8-759-145-58 | μPC4558C |
| ⇒IC901 | 8-759-700-58 | NJM4558DFA |
| IC902 | 8-759-145-58 | μPC4558C |
| IC903 | 8-759-690-00 | CX069 |
| IC904, 905 | 8-759-145-58 | μPC4558C |
| | **Diodes** | |
| D101, 201 | 8-719-815-55 | 1S1555 |
| D102, 202 | | |
| D103, 203 | | |
| D104, 204 | | |



- Items marked "♦" are not stocked since they are seldom required for routine service. Some delay should be anticipated when ordering these items.

⇒: Due to standardization, interchangeable replacements may be substituted for parts specified in the diagrams.

**Note: The components identified by shading and mark ⚠ are critical for safety. Replace only with part number specified.**

| Ref. No. | Part No. | Description |
|---|---|---|
| D105, 205 D301–303 | 8-719-815-55 | 1S1555 |
| D304, 305 | 8-719-910-65 | HZ6B2L |
| D401 | 8-719-815-55 | 1S1555 |
| D601–612 | 8-719-200-02 | 10E2 |
| D613 | 8-719-910-15 | HZ11B2L |
| D614 | 8-719-990-92 | HZ9A2L |
| D615 | 8-719-815-55 | 1S1555 |
| D616 | ⚠8-719-200-02 | 10E2 |
| D617, 618 | 8-719-815-55 | 1S1555 |
| D619 | 8-719-200-02 | 10E2 |
| D620–623 | 8-719-815-55 | 1S1555 |
| D624 | 8-719-910-11 | SR110 |
| D625 | 8-719-319-41 | SEL1941D |
| D626 | 8-719-311-12 | SEL1112R |
| D627, 630 | 8-719-317-33 | SEL1733Y |
| D628, 629 | 8-719-313-31 | SEL1331G |
| D631, 632 | 8-719-200-02 | 10E2 |
| D633–635 D901–905 | 8-719-815-55 | 1S1555 |
| D906 | 8-719-910-65 | HZ6B2L |
| HE901–904 | 8-719-841-02 | F1410 |

### CAPACITORS

All capacitors are in μF. Common capacitors are omitted. Refer to the lists on pages 75 and 76 for their part numbers.

| | | | | |
|---|---|---|---|---|
| C117, 217 | 1-130-305-00 | 0.022 | 100 V | polyethylene |
| C119, 219 | 1-123-232-00 | 4.7 | 50 V | electrolytic |
| C122, 222 | 1-130-307-00 | 0.027 | 100 V | polyethylene |
| C124, 224 | 1-123-228-00 | 1 | 50 V | electrolytic |
| C136, 236 | 1-123-232-00 | 4.7 | 50 V | electrolytic |
| C137, 237 | 1-123-232-00 | 4.7 | 50 V | electrolytic |
| C301, 302 | ⚠1-121-422-11 | 220 | 25 V | electrolytic |
| C601 | ⚠1-123-324-00 | 1000 | 16 V | electrolytic |
| C603, 604 | ⚠1-123-338-00 | 2200 | 25 V | electrolytic |
| C629, 630 | ⚠1-121-657-11 | 1000 | 25 V | electrolytic |
| C909 | 1-130-134-00 | 0.082 | 100 V | plastic |

### RESISTORS

All resistors are in ohms. Common ¼ W carbon resistors are omitted. Refer to the list on page 77 for their part numbers. kΩ: 1000 Ω

| | | | | |
|---|---|---|---|---|
| R160, 260 R195, 295 | ⚠1-212-865-00 | 22 | ¼ W | fusible |
| R303, 304 | 1-214-727-00 | 820 | ¼ W | metal-oxide |
| R305, 306 | 1-214-731-00 | 1.2 k | ¼ W | metal-oxide |
| R926 | 1-214-778-00 | 110 k | ¼ W | metal-oxide |
| R928, 929 | ⚠1-213-036-00 | 1 | 1 W | fusible |
| R973, 974 | ⚠1-212-368-00 | 4.7 | 1 W | fusible |
| RV101, 201 | 1-226-839-00 | 20 k-A, variable; REC LEVEL | | |
| RV102, 202 | 1-224-645-XX | 10 k, adjustable; PB level | | |
| RV103, 203 | 1-224-647-XX | 47 k, adjustable; REC level | | |
| RV104, 204 | 1-226-235-00 | 5 k, adjustable; meter level | | |
| RV726 | 1-226-241-00 | 470 k, adjustable; fast reverse | | |
| RV901 | 1-224-491-00 | 22 k, adjustable; tape speed | | |
| RV902, 903 | 1-224-642-XX | 1 k, adjustable; capstan-motor gain | | |
| RV904, 905 | 1-224-641-XX | 470 k, adjustable; reel-motor gain | | |
| RV906–909 | 1-224-645-XX | 10 k, adjustable; reel-motor offset | | |
| RV910 | 1-224-642-XX | 1 k, adjustable; reel-motor gain balance | | |

### MISCELLANEOUS

| | | |
|---|---|---|
| CNJ1 | 1-507-531-00 | Board, jack; 4-pin; LINE IN/ LINE (FIXED) OUT |
| CP1 | ⚠1-231-057-00 | Encapsulated Component (AEP, E, UK model) |
| | ⚠1-231-326-00 | Encapsulated Component (US model) |
| E/RP | 8-825-728-60 | Head, erase/record/playback; (EPS202-3602) |
| F1–3 | ⚠1-532-203-00 | Fuse, T2 A (AEP, E, UK model) |
| F4, 5 | ⚠1-532-215-00 | Fuse, T0.8 A (AEP, E, UK model) |
| HJ301 | 1-507-553-00 | Jack, stereo-binaural; HEADPHONES |
| J101, 201 | 1-507-666-00 | Jack, phone; MIC |
| L101, 201 | 1-231-388-00 | Filter, low-pass |
| L102, 202 | 1-408-256-00 | Microinductor, 8.2 mH |

| Ref. No. | Part No. | Description |
|---|---|---|
| L103, 203 L104, 204 | 1-408-254-00 | Microinductor, 5.6 mH |
| L105, 205 | 1-408-253-00 | Microinductor, 4.7 mH |
| L106, 206 | 1-408-262-00 | Microinductor, 27 mH |
| PL1–3 | 1-518-305-21 | Lamp, 8 V 50 mA |
| PL4, 5 | 1-518-305-31 | Lamp, 8 V 50 mA |
| PL6, 7 | 1-518-417-00 | Lamp, 8 V 0.1 A |
| PL8 | 1-518-340-71 | Lamp, 8 V 50 mA |
| PM1, 2 | ⚠1-454-222-11 | Solenoid, brake/head |
| RY1 | 1-515-323-00 | Relay |
| S1 | 1-553-272-00 | Switch, pushbutton; INPUT |
| S2 | 1-553-217-00 | Switch, level-slide; DOLBY NR |
| S3 | 1-553-215-00 | Switch, lever-slide; TAPE |
| S4 | ——— | |
| S5 | 1-552-876-00 | Switch, pushbutton; PEAK HOLD RESET |
| S6 | ——— | |
| S7 | 1-553-323-00 | Switch, rotary; LINE OUT/ PHONES |
| S8 | 1-552-807-00 | Switch, rotary; BIAS |
| S9 | ——— | |
| S10–17 | 1-552-539-00 | Switch, keyboard |
| S18, 19 | 1-552-520-00 | Switch, slide; TIMER, MEMORY |
| S20 | 1-553-273-00 | Switch, pushbutton; DIRECTION MODE |
| S21–23 | 1-552-268-00 | Switch, slide; accidental-erasure prevention/cassette-lid |
| S24 | 1-548-537-51 | Counter, tape |
| S25 | 1-516-686-00 | Switch, lever-slide; tape-direction |
| S26 | ⚠1-552-530-00 | Switch, pushbutton; POWER (US model) |
| | ⚠1-552-903-00 | Switch, pushbutton; POWER (AEP, E, UK model) |
| SW901 | 1-553-325-00 | Switch, adjustable; test |
| T | ⚠ 1-446-729-00 | Transformer, power (US model) |
| | 1-446-730-00 | Transformer, power (AEP, E, UK model) |
| | A-2133-069-A | Motor Ass'y, capstan |
| | A-2133-070-A | Motor Ass'y, reel |

| Ref. No. | Part No. | Description |
|---|---|---|
| | 1-464-124-00 | Bias Osc Unit |
| | 1-507-526-21 | Board, jack; 2-pin; VARIABLE LINE OUT |
| | ♠1-508-878-00 | Post, base 3-pin |
| | ♠1-508-879-00 | Post, base 4-pin |
| | ⚠1-526-576-31 | Voltage Selector (AEP, E, UK model) |
| | ⚠1-526-609-00 | Connector, AC OUTLET (US model) |
| | 1-533-125-00 | Holder, fuse (AEP, E, UK model) |
| | ♠1-535-115-00 | Terminal, base 2-pin |
| | ♠1-535-121-21 | Terminal, base 8-pin |
| | ⚠1-551-507-00 | Cord, power (US model) |
| | ⚠1-551-530-00 | Cord, pwoer (E model) |
| | ⚠1-551-817-31 | Cord, power (AEP model) |
| | ⚠1-551-884-31 | Cord, power (UK model) |
| | ♠1-560-060-00 | Pin, connector; 2-pin |
| | ♠1-560-061-00 | Pin, connector; 3-pin |
| | ♠1-560-062-00 | Pin, connector; 4-pin |
| | ♠1-560-063-00 | Pin, connector; 5-pin |
| | ♠1-560-064-00 | Pin, connecotr; 6-pin |
| | ♠1-560-065-00 | Pin, connector; 8-pin |
| | 1-561-528-00 | Connector, 5-pin; REMOTE |
| | 1-800-822-11 | LED meter |

**PRINTED CIRCUIT BOARDS**

| | |
|---|---|
| ♠1-602-679-00 | REC LEVEL Control |
| ♠1-602-680-00 | Mic Amp |
| ♠1-602-681-00 | Headphone |
| ♠1-602-682-00 | Input/output |
| ♠1-602-683-00 | VARIABLE Line Out |
| ♠1-602-684-00 | Meter |
| ♠1-602-685-00 | Peak-hold reset |
| ♠1-602-688-00 | Timer |
| ♠1-602-689-00 | Memory |
| ♠1-602-690-00 | Shut-off |
| ♠1-602-691-00 | Mode-indication |
| ♠1-602-692-00 | Mode Switch |
| ♠1-602-693-00 | TR1 |
| ♠1-602-694-00 | TR2 |
| ♠1-602-695-00 | TR3 |

| *Ref. No.* | *Part No.* | *Description* |
|---|---|---|
| | ♦1-602-696-00 | Direction |
| | ♦1-602-697-00 | Head-relaying |
| | ♦1-602-699-00 | Function Switch |

**COMPLETE CIRCUIT BOARDS**

| | | |
|---|---|---|
| | ♦ A-2010-163-A | Record/playback Amp |
| | ♦ A-2019-111-A | System-control |
| | ♦ A-2020-067-A | Servo |

**ACCESSORIES & PACKING MATERIALS**

| *Part No.* | *Description* |
|---|---|
| 3-558-465-00 | Cushion |
| 3-572-374-00 | Bag, plastic |
| 3-572-380-00 | Carton |
| 3-572-383-00 | Carton, RM (US, E model) |
| 3-701-811-04 | Card, caution (US model) |
| 3-783-171-11 | Manual, instruction (AEP, E, UK model) |
| 3-783-171-21 | Manual, instruction (US model) |
| 3-793-828-11 | Card, caution |
| 3-794-233-21 | Card, cassette (US model) |
| 3-794-935-51 | Card, instruction (US, E model) |
| 7-824-012-11 | Card, cassette (US model) |
| 7-824-012-12 | Card, cassette (AEP, E, UK model) |

## ELECTROLYTIC CAPACITORS

RATING → : Use the high voltage rated one.

| CAP. (μF) | 6.3 VOLT. PART No. | 10 VOLT. PART No. | 16 VOLT. PART No. | 25 VOLT. PART No. | 35 VOLT. PART No. | 50 VOLT. PART No. |
|---|---|---|---|---|---|---|
| 0.47 | | | | | → | 1-121-726-00 |
| 1.0 | | | | | → | 1-121-391-00 |
| 2.2 | | | | | → | 1-121-450-00 |
| 3.3 | → | → | → | 1-121-392-00 | → | 1-121-393-00 |
| 4.7 | → | → | → | 1-121-395-00 | → | 1-121-396-00 |
| 10 | → | → | 1-121-651-00 | 1-121-398-00 | → | 1-121-738-00 |
| 22 | → | → | 1-121-479-00 | 1-121-480-00 | 1-121-662-00 | 1-121-152-00 |
| 33 | → | → | 1-121-403-00 | 1-121-404-00 | 1-121-652-00 | 1-121-405-00 |
| 47 | → | 1-121-352-00 | 1-121-409-00 | 1-121-410-00 | 1-121-653-00 | 1-121-411-00 |
| 100 | → | 1-121-414-00 | 1-121-415-00 | 1-121-416-00 | 1-121-357-00 | 1-121-417-00 |
| 220 | 1-121-419-00 | 1-121-420-00 | 1-121-421-00 | 1-121-422-00 | 1-121-261-00 | 1-121-423-00 |
| 330 | 1-121-751-00 | 1-121-805-00 | 1-121-521-00 | 1-121-654-00 | 1-121-655-00 | 1-121-656-00 |
| 470 | 1-121-424-00 | 1-121-425-00 | 1-121-426-00 | 1-121-733-00 | 1-121-361-00 | 1-121-810-00 |
| 1000 | – | 1-121-736-00 | 1-121-245-00 | 1-121-657-00 | 1-121-388-00 | 1-123-061-00 |
| 2200 | 1-121-658-00 | 1-121-659-00 | 1-121-660-00 | 1-123-067-00 | 1-121-984-00 | – |
| 3300 | 1-121-661-00 | 1-123-075-00 | 1-123-071-00 | – | – | – |

| CAP. (μF) | 100 VOLT. PART No. | 160 VOLT. PART No. | 250 VOLT. PART No. | 350 VOLT. PART No. |
|---|---|---|---|---|
| 0.47 | – | – | – | – |
| 1.0 | 1-123-249-00 | 1-123-252-00 | 1-123-003-00 | 1-121-168-00 |
| 2.2 | 1-123-250-00 | 1-123-026-00 | – | 1-123-028-00 |
| 3.3 | 1-121-995-00 | – | 1-123-004-00 | 1-123-006-00 |
| 4.7 | 1-123-255-00 | 1-121-246-00 | 1-121-759-00 | 1-123-007-00 |
| 10 | 1-121-126-00 | 1-121-999-00 | 1-123-254-00 | 1-123-008-00 |
| 22 | 1-121-996-00 | 1-123-253-00 | 1-123-005-00 | 1-123-022-00 |
| 33 | 1-121-997-00 | 1-121-757-00 | – | – |
| 47 | 1-123-251-00 | 1-121-919-00 | – | – |
| 100 | 1-123-084-00 | – | – | – |

## CERAMIC CAPACITORS

RATING

| CAP. (pF) | 50 VOLT. PART No. | CAP. (pF) | 50 VOLT. PART No. | CAP. (pF) | 50 VOLT. PART No. | CAP. (μF) | 50 VOLT. PART No. |
|---|---|---|---|---|---|---|---|
| 0.5 | 1-101-837-00 | 22 | 1-102-959-00 | 150 | 1-101-361-00 | 0.001 | 1-102-074-00 |
| 0.75 | 1-101-586-00 | 24 | 1-102-960-00 | 160 | 1-101-367-00 | 0.0012 | 1-102-118-00 |
| 1.0 | 1-102-934-00 | 27 | 1-102-961-00 | 180 | 1-102-976-00 | 0.0015 | 1-102-119-00 |
| 1.5 | 1-101-576-00 | 30 | 1-102-962-00 | 200 | 1-102-977-00 | 0.0018 | 1-102-120-00 |
| 2.0 | 1-102-935-00 | 33 | 1-102-963-00 | 220 | 1-102-978-00 | 0.0022 | 1-102-121-00 |
| 3 | 1-102-936-00 | 36 | 1-102-964-00 | 240 | 1-102-979-00 | 0.0027 | 1-102-122-00 |
| 4 | 1-102-937-00 | 39 | 1-102-965-00 | 270 | 1-102-980-00 | 0.0033 | 1-102-123-00 |
| 5 | 1-102-942-00 | 43 | 1-102-966-00 | 300 | 1-102-981-00 | 0.0039 | 1-102-124-00 |
| 6 | 1-102-943-00 | 47 | 1-101-880-00 | 330 | 1-102-820-00 | 0.0047 | 1-102-125-00 |
| 7 | 1-102-944-00 | 51 | 1-101-882-00 | 360 | 1-102-821-00 | 0.0056 | 1-102-126-00 |
| 8 | 1-102-945-00 | 56 | 1-101-884-00 | 390 | 1-102-822-00 | 0.0068 | 1-102-127-00 |
| 9 | 1-102-946-00 | 62 | 1-101-886-00 | 430 | 1-102-823-00 | 0.0082 | 1-102-128-00 |
| 10 | 1-102-947-00 | 68 | 1-101-888-00 | 470 | 1-102-824-00 | 0.01 | 1-102-129-00 |
| 11 | 1-102-948-00 | 75 | 1-101-890-00 | 510 | 1-101-059-00 | 0.022 | 1-101-005-00 |
| 12 | 1-102-949-00 | 82 | 1-102-971-00 | 560 | 1-102-115-00 | 0.047 | 1-101-006-00 |
| 13 | 1-102-950-00 | 91 | 1-102-972-00 | 680 | 1-102-116-00 | | |
| 15 | 1-102-951-00 | 100 | 1-102-973-00 | 820 | 1-102-117-00 | | |
| 16 | 1-102-952-00 | 110 | 1-102-815-00 | | | | |
| 18 | 1-102-953-00 | 120 | 1-102-816-00 | | | | |
| 20 | 1-102-958-00 | 130 | 1-101-081-00 | | | | |

0.001μF = 1,000pF

## CERAMIC (SEMICONDUCTOR) CAPACITORS

RATING → : Use the high voltage rated one.

| CAP. (μF) | 25 VOLT. PART No. | 50 VOLT. PART No. | CAP. (μF) | 25 VOLT. PART No. | 50 VOLT. PART No. |
|---|---|---|---|---|---|
| 0.001 | → | 1-161-039-00 | 0.018 | 1-161-016-00 | 1-161-054-00 |
| 0.0012 | → | 1-161-040-00 | 0.022 | 1-161-017-00 | 1-161-055-00 |
| 0.0015 | | 1-161-041-00 | 0.027 | 1-161-018-00 | 1-161-056-00 |
| 0.0018 | | 1-161-042-00 | 0.033 | 1-161-019-00 | 1-161-057-00 |
| 0.0022 | | 1-161-043-00 | 0.039 | 1-161-010-00 | 1-161-058-00 |
| 0.0027 | → | 1-161-044-00 | 0.047 | 1-161-021-00 | 1-161-059-00 |
| 0.0033 | → | 1-161-045-00 | 0.056 | → | 1-161-060-00 |
| 0.0039 | → | 1-161-046-00 | 0.068 | → | 1-161-061-00 |
| 0.0047 | → | 1-161-047-00 | 0.082 | 1-161-024-00 | 1-161-062-00 |
| 0.0056 | → | 1-161-048-00 | 0.1 | 1-161-025-00 | 1-161-063-00 |
| 0.0068 | → | 1-161-049-00 | | | |
| 0.0082 | 1-161-012-00 | 1-161-050-00 | | | |
| 0.01 | 1-161-013-00 | 1-161-051-00 | | | |
| 0.012 | → | 1-161-052-00 | | | |
| 0.015 | 1-161-015-00 | 1-161-053-00 | | | |

## MYLAR CAPACITORS

| CAP. (μF) | RATING 50 VOLT. PART No. | 100 VOLT. PART No. | 200 VOLT. PART No. | CAP. (μF) | 50 VOLT. PART No. | 100 VOLT. PART No. | 200 VOLT. PART No. | CAP. (μF) | 50 VOLT. PART No. | 100 VOLT. PART No. | 200 VOLT. PART No. |
|---|---|---|---|---|---|---|---|---|---|---|---|
| 0.001 | 1-108-227-00 | 1-108-365-00 | 1-108-409-00 | 0.01 | 1-108-239-00 | 1-108-377-00 | 1-108-421-00 | 0.1 | 1-108-251-00 | 1-108-389-00 | 1-108-433-00 |
| 0.0012 | 1-108-351-00 | 1-108-366-00 | 1-108-410-00 | 0.012 | 1-108-357-00 | 1-108-378-00 | 1-108-422-00 | 0.12 | 1-108-363-00 | 1-108-390-00 | 1-108-434-00 |
| 0.0015 | 1-108-228-00 | 1-108-367-00 | 1-108-411-00 | 0.015 | 1-108-240-00 | 1-108-379-00 | 1-108-423-00 | 0.15 | 1-108-252-00 | 1-108-391-00 | 1-108-435-00 |
| 0.0018 | 1-108-352-00 | 1-108-368-00 | 1-108-412-00 | 0.018 | 1-108-358-00 | 1-108-380-00 | 1-108-424-00 | 0.18 | 1-108-364-00 | 1-108-392-00 | 1-108-436-00 |
| 0.0022 | 1-108-230-00 | 1-108-369-00 | 1-108-413-00 | 0.022 | 1-108-242-00 | 1-108-381-00 | 1-108-425-00 | 0.22 | 1-108-254-00 | 1-108-393-00 | 1-108-437-00 |
| 0.0027 | 1-108-353-00 | 1-108-370-00 | 1-108-414-00 | 0.027 | 1-108-359-00 | 1-108-382-00 | 1-108-426-00 | 0.27 | 1-108-854-00 | – | – |
| 0.0033 | 1-108-232-00 | 1-108-371-00 | 1-108-415-00 | 0.033 | 1-108-244-00 | 1-108-383-00 | 1-108-427-00 | 0.33 | 1-108-855-00 | – | – |
| 0.0039 | 1-108-354-00 | 1-108-372-00 | 1-108-416-00 | 0.039 | 1-108-360-00 | 1-108-384-00 | 1-108-428-00 | 0.39 | 1-108-856-00 | – | – |
| 0.0047 | 1-108-234-00 | 1-108-373-00 | 1-108-417-00 | 0.047 | 1-108-246-00 | 1-108-385-00 | 1-108-429-00 | 0.47 | 1-108-857-00 | – | – |
| 0.0056 | 1-108-355-00 | 1-108-374-00 | 1-108-418-00 | 0.056 | 1-108-361-00 | 1-108-386-00 | 1-108-430-00 | | | | |
| 0.0068 | 1-108-237-00 | 1-108-375-00 | 1-108-419-00 | 0.068 | 1-108-249-00 | 1-108-387-00 | 1-108-431-00 | | | | |
| 0.0082 | 1-108-356-00 | 1-108-376-00 | 1-108-420-00 | 0.082 | 1-108-362-00 | 1-108-388-00 | 1-108-432-00 | | | | |

## TANTALUM CAPACITORS

RATING → : Use the high voltage rated one.

| CAP. (μF) | 3.15 VOLT. PART No. | 6.3 VOLT. PART No. | 10 VOLT. PART No. | 16 VOLT. PART No. | 20 VOLT. PART No. | 25 VOLT. PART No. | 35 VOLT. PART No. |
|---|---|---|---|---|---|---|---|
| 0.01 | | | | | → | → | 1-131-396-00 |
| 0.015 | | | | | | → | 1-131-397-00 |
| 0.022 | | | | | | → | 1-131-398-00 |
| 0.033 | | | | | | → | 1-131-399-00 |
| 0.047 | | | | | | → | 1-131-400-00 |
| 0.068 | | | | | → | → | 1-131-401-00 |
| 0.1 | | | | | → | → | 1-131-402-00 |
| 0.15 | | | | | → | → | 1-131-403-00 |
| 0.22 | | | | | → | → | 1-131-404-00 |
| 0.33 | | | | | → | 1-131-409-00 | 1-131-405-00 |
| 0.47 | – | – | – | – | 1-131-412-00 | → | 1-131-406-00 |
| 0.68 | – | – | – | 1-131-415-00 | → | 1-131-410-00 | 1-131-407-00 |
| 1.0 | – | – | 1-131-418-00 | – | 1-131-413-00 | → | 1-131-408-00 |
| 1.5 | – | 1-131-421-00 | – | 1-131-416-00 | → | 1-131-411-00 | 1-131-348-00 |
| 2.2 | 1-131-424-00 | – | 1-131-419-00 | – | 1-131-414-00 | 1-131-355-00 | 1-131-349-00 |
| 3.3 | – | 1-131-422-00 | – | 1-131-417-00 | 1-131-362-00 | 1-131-356-00 | 1-131-350-00 |
| 4.7 | 1-131-425-00 | – | 1-131-420-00 | 1-131-369-00 | 1-131-363-00 | 1-131-357-00 | 1-131-351-00 |
| 6.8 | – | 1-131-423-00 | 1-131-376-00 | 1-131-370-00 | 1-131-364-00 | 1-131-358-00 | 1-131-352-00 |
| 10 | 1-131-426-00 | 1-131-383-00 | 1-131-377-00 | 1-131-371-00 | 1-131-365-00 | 1-131-359-00 | 1-131-353-00 |
| 15 | 1-131-390-00 | 1-131-384-00 | 1-131-378-00 | 1-131-372-00 | 1-131-366-00 | 1-131-360-00 | – |
| 22 | 1-131-391-00 | 1-131-385-00 | 1-131-379-00 | 1-131-373-00 | 1-131-367-00 | | |
| 33 | 1-131-392-00 | 1-131-386-00 | 1-131-380-00 | 1-131-374-00 | | | |
| 47 | 1-131-393-00 | 1-131-387-00 | 1-131-381-00 | – | | | |
| 68 | 1-131-394-00 | 1-131-388-00 | – | – | | | |
| 100 | 1-131-395-00 | – | – | – | | | |

## TANTALUM CAPACITORS

| CAP. (μF) | RATING 3 VOLT. PART No. | 6.3 VOLT. PART No. | 10 VOLT. PART No. | 16 VOLT. PART No. | 20 VOLT. PART No. | 35 VOLT. PART No. |
|---|---|---|---|---|---|---|
| 0.033 | | | | | | 1-131-273-00 |
| 0.047 | | | | | | 1-131-274-00 |
| 0.068 | | | | | | 1-131-275-00 |
| 0.1 | | | | | | 1-131-276-00 |
| 0.15 | | | | | | 1-131-277-00 |
| 0.22 | | | – | – | 1-131-262-00 | 1-131-278-00 |
| 0.33 | | | – | – | 1-131-263-00 | 1-131-279-00 |
| 0.47 | | | 1-131-169-00 | – | 1-131-264-00 | 1-131-280-00 |
| 0.68 | | | – | 1-131-258-00 | 1-131-265-00 | 1-131-281-00 |
| 1.0 | | | 1-131-254-00 | – | 1-131-266-00 | 1-131-282-00 |
| 1.5 | | 1-131-250-00 | – | – | 1-131-267-00 | 1-131-283-00 |
| 2.2 | | – | – | 1-131-259-00 | 1-131-268-00 | 1-131-284-00 |
| 3.3 | | – | 1-131-255-00 | – | 1-131-269-00 | – |
| 4.7 | | 1-131-251-00 | 1-131-171-00 | – | 1-131-270-00 | – |
| 6.8 | | – | – | 1-131-260-00 | 1-131-271-00 | – |
| 10 | – | – | 1-131-256-00 | – | 1-131-272-00 | – |
| 15 | – | 1-131-252-00 | – | 1-131-261-00 | | |
| 22 | – | – | 1-131-257-00 | – | | |
| 33 | 1-131-176-00 | 1-131-253-00 | 1-131-173-00 | – | | |
| 47 | 1-131-288-00 | 1-131-174-00 | – | – | | |
| 100 | 1-131-177-00 | | | | | |

## 1/4 WATT CARBON RESISTORS

| Ω | Part No. | Ω | Part No. | Ω | Part No. | Ω | Part No. | Ω | Part No. | Ω | Part No. | Ω | Part No. |
|---|---|---|---|---|---|---|---|---|---|---|---|---|---|
| 1.0 | 1-246-401-00 | 10 | 1-246-425-00 | 100 | 1-246-449-00 | 1.0k | 1-246-473-00 | 10k | 1-246-497-00 | 100k | 1-246-521-00 | 1.0M | 1-246-545-00 |
| 1.1 | 1-246-402-00 | 11 | 1-246-426-00 | 110 | 1-246-450-00 | 1.1k | 1-246-474-00 | 11k | 1-246-498-00 | 110k | 1-246-522-00 | 1.1M | 1-210-814-00 |
| 1.2 | 1-246-403-00 | 12 | 1-246-427-00 | 120 | 1-246-451-00 | 1.2k | 1-246-475-00 | 12k | 1-246-499-00 | 120k | 1-246-523-00 | 1.2M | 1-210-815-00 |
| 1.3 | 1-246-404-00 | 13 | 1-246-428-00 | 130 | 1-246-452-00 | 1.3k | 1-246-576-00 | 13k | 1-246-500-00 | 130k | 1-246-524-00 | 1.3M | 1-210-816-00 |
| 1.5 | 1-246-405-00 | 15 | 1-246-429-00 | 150 | 1-246-453-00 | 1.5k | 1-246-577-00 | 15k | 1-246-501-00 | 150k | 1-246-525-00 | 1.5M | 1-210-817-00 |
| 1.6 | 1-246-406-00 | 16 | 1-246-430-00 | 160 | 1-246-454-00 | 1.6k | 1-246-578-00 | 16k | 1-246-502-00 | 160k | 1-246-526-00 | 1.6M | 1-210-818-00 |
| 1.8 | 1-246-407-00 | 18 | 1-246-431-00 | 180 | 1-246-455-00 | 1.8k | 1-246-579-00 | 18k | 1-246-503-00 | 180k | 1-246-527-00 | 1.8M | 1-210-819-00 |
| 2.0 | 1-246-408-00 | 20 | 1-246-432-00 | 200 | 1-246-456-00 | 2.0k | 1-246-580-00 | 20k | 1-246-504-00 | 200k | 1-246-528-00 | 2.0M | 1-210-820-00 |
| 2.2 | 1-246-409-00 | 22 | 1-246-433-00 | 220 | 1-246-457-00 | 2.2k | 1-246-581-00 | 22k | 1-246-505-00 | 220k | 1-246-529-00 | 2.2M | 1-210-821-00 |
| 2.4 | 1-246-410-00 | 24 | 1-246-434-00 | 240 | 1-246-458-00 | 2.4k | 1-246-582-00 | 24k | 1-246-506-00 | 240k | 1-246-530-00 | 2.4M | 1-244-754-00 |
| 2.7 | 1-246-411-00 | 27 | 1-246-435-00 | 270 | 1-246-459-00 | 2.7k | 1-246-583-00 | 27k | 1-246-507-00 | 270k | 1-246-531-00 | 2.7M | 1-244-755-00 |
| 3.0 | 1-246-412-00 | 30 | 1-246-436-00 | 300 | 1-246-460-00 | 3.0k | 1-246-584-00 | 30k | 1-246-508-00 | 300k | 1-246-532-00 | 3.0M | 1-244-756-00 |
| 3.3 | 1-246-413-00 | 33 | 1-246-437-00 | 330 | 1-246-461-00 | 3.3k | 1-246-585-00 | 33k | 1-246-509-00 | 330k | 1-246-533-00 | 3.3M | 1-244-757-00 |
| 3.6 | 1-246-414-00 | 36 | 1-246-438-00 | 360 | 1-246-462-00 | 3.6k | 1-246-586-00 | 36k | 1-246-510-00 | 360k | 1-246-534-00 | 3.6M | 1-244-758-00 |
| 3.9 | 1-246-415-00 | 39 | 1-246-439-00 | 390 | 1-246-463-00 | 3.9k | 1-246-587-00 | 39k | 1-246-511-00 | 390k | 1-246-535-00 | 3.9M | 1-244-759-00 |
| 4.3 | 1-246-416-00 | 43 | 1-246-440-00 | 430 | 1-246-464-00 | 4.3k | 1-246-488-00 | 43k | 1-246-512-00 | 430k | 1-246-536-00 | 4.3M | 1-244-760-00 |
| 4.7 | 1-246-417-00 | 47 | 1-246-441-00 | 470 | 1-246-465-00 | 4.7k | 1-246-489-00 | 47k | 1-246-513-00 | 470k | 1-246-537-00 | 4.7M | 1-244-761-00 |
| 5.1 | 1-246-418-00 | 51 | 1-246-442-00 | 510 | 1-246-466-00 | 5.1k | 1-246-490-00 | 51k | 1-246-514-00 | 510k | 1-246-538-00 | 5.1M | 1-244-762-00 |
| 5.6 | 1-246-419-00 | 56 | 1-246-443-00 | 560 | 1-246-467-00 | 5.6k | 1-246-491-00 | 56k | 1-246-515-00 | 560k | 1-246-539-00 | | |
| 6.2 | 1-246-420-00 | 62 | 1-246-444-00 | 620 | 1-246-468-00 | 6.2k | 1-246-492-00 | 62k | 1-246-516-00 | 620k | 1-246-540-00 | | |
| 6.8 | 1-246-421-00 | 68 | 1-246-445-00 | 680 | 1-246-469-00 | 6.8k | 1-246-493-00 | 68k | 1-246-517-00 | 680k | 1-246-541-00 | | |
| 7.5 | 1-246-422-00 | 75 | 1-246-446-00 | 750 | 1-246-470-00 | 7.5k | 1-246-494-00 | 75k | 1-246-518-00 | 750k | 1-246-542-00 | | |
| 8.2 | 1-246-423-00 | 82 | 1-246-447-00 | 820 | 1-246-471-00 | 8.2k | 1-246-495-00 | 82k | 1-246-519-00 | 820k | 1-246-543-00 | | |
| 9.1 | 1-246-424-00 | 91 | 1-246-448-00 | 910 | 1-246-472-00 | 9.1k | 1-246-496-00 | 91k | 1-246-520-00 | 910k | 1-246-544-00 | | |

## HARDWARE NOMENCLATURE

**Screw:** – P 3 x 10

- *L: Length in mm*
- *D: Diameter in mm*
- *Type of head*
- *Indicated slotted-head only. Unless otherwise indicated, it means cross-recessed head (Phillips type).*

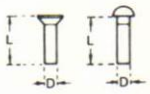


**Nut, Washer, Retaining ring:** N 3

- *Diameter of usable screw or shaft*
- *Reference designation*

| Reference Designation | Shape | Description | Remarks |
|---|---|---|---|
| | | **SCREWS** | |
| P | | pan-head screw | binding-head (B) screw for replacement |
| PWH | | pan-head screw with washer face | binding-head (B) screw and flat washer for replacement |
| PS<br>PSP | | pan-head screw with spring washer | binding-head (B) screw and spring washer for replacement |
| PSW<br>PSPW | | pan-head screw with spring and flat washers | binding-head (B) screw and spring and flat washers for replacement |
| R | | round-head screw | binding-head (B) screw for replacement |
| K | | flat-countersunk-head screw | |
| RK | | oval-countersunk-head screw | |
| B | | binding-head screw | |
| T | | truss-head screw | binding-head (B) screw for replacement |
| F | | flat-fillister-head screw | |
| RF | | fillister-head screw | |
| BV | | braizer-head screw | |

| Reference Designation | Shape | Description | Remarks |
|---|---|---|---|
| | | **SELF-TAPPING SCREWS** | |
| TA | | self-tapping screw | ex: TA, P 3 x 10 |
| PTP | | pan-head self-tapping screw | binding-head self-tapping (TA, B) screw for replacement |
| PTPWH | | pan-head self-tapping screw with washer face | binding-head self tapping (TA, B) screw and flat washer for replacement |
| PTTWH | | pan-head thread-rolling screw with washer face | binding-head (B) screw and flat washer for replacement |
| | | **SET SCREWS** | |
| SC | | set screw | |
| SC | | hexagon-socket set screw | ex: SC 2.6 x 4, hexagon socket |
| | | **NUT** | |
| N | | nut | |
| | | **WASHERS** | |
| W | | flat washer | |
| SW | | spring washer | |
| LW | | internal-tooth lock washer | ex: LW3, internal |
| LW | | external-tooth lock washer | ex: LW3, external |
| | | **RETAINING RINGS** | |
| E | | retaining ring | |
| G | | grip-type retaining ring | |

9-954-885-11

Sony Corporation


80D05104-1
Printed in Japan