TC-K777ES

AEP Model

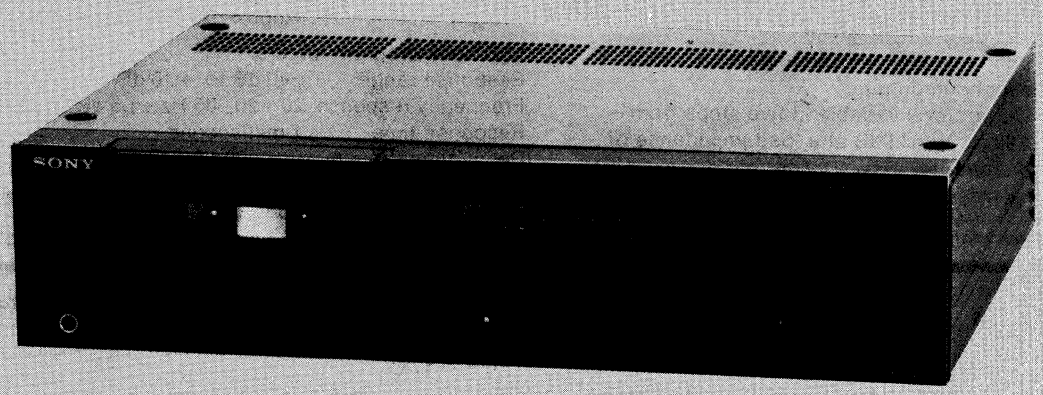

STEREO CASSETTE DECK

SPECIFICATIONS

Recording system 4-track 2-channel stereo

Fast-forward and rewind time
Approx. 65 sec. (with C-60 cassette)

Bias frequency 105 kHz

Signal-to-noise ratio (NAB, at peak level)

Cassette \ Dolby NR switch	OFF	B-TYPE ON	C-TYPE ON
TYPE IV (Sony METALLIC)	61 dB	68 dB	74 dB
TYPE III (Sony FeCr)	62 dB	69 dB	75 dB
TYPE II (Sony UCX)	59 dB	66 dB	72 dB
TYPE I (Sony BHF)	57 dB	64 dB	70 dB

Total harmonic distortion
0.7 % (with Sony METALLIC and FeCr cassettes)

Frequency response DOLBY NR OFF
- With TYPE IV cassette (Sony METALLIC)
  10 - 20,000 Hz
  15 - 19,000 Hz (±3 dB)
  15 - 14,000 Hz (±3 dB, 0 VU recording)
  15 - 19,000 Hz (DIN)
- With TYPE III cassette (Sony FeCr)
  10 - 20,000 Hz
  15 - 19,000 Hz (±3 dB)
  15 - 19,000 Hz (DIN)
- With TYPE II cassette (Sony UCX)
  10 - 20,000 Hz
  15 - 18,000 Hz (±3 dB)
  15 - 18,000 Hz (DIN)
- With TYPE I cassette (Sony BHF)
  10 - 19,000 Hz
  15 - 17,000 Hz (DIN)

Wow and flutter 0.02% WRMS (NAB)
±0.055% (DIN)

Inputs Line inputs (phono jacks)
Sensitivity 77.5 mV (−20 dB)
Input impedance 50 k ohms

— Continued on page 2 —

SAFETY-RELATED COMPONENT WARNING!!

COMPONENTS IDENTIFIED BY SHADING AND MARK ⚠ ON THE SCHEMATIC DIAGRAMS AND IN THE PARTS LIST ARE CRITICAL TO SAFE OPERATION. REPLACE THESE COMPONENTS WITH SONY PARTS WHOSE PART NUMBERS APPEAR AS SHOWN IN THIS MANUAL OR IN SUPPLEMENTS PUBLISHED BY SONY.

MICROFILM

SONY

SERVICE MANUAL

Outputs	Fixed line outputs (phono jacks) Output level 0.435 V (−5 dB) at a load impedance of 50 k ohms Load impedance over 10 k ohms Variable line outputs (phono jacks) Maximum output level 0.435 V (−5 dB) at a load impedance of 50 k ohms with LINE OUT level control at "0" Variable in five steps from −5 dB to −29 dB Load impedance over 10 k ohms Headphone output Output level variable in five steps from −20 dB to −44 dB at a load impedance of 8 ohms

Tape Transport Mechanism	TCM-120D3

0 dB = 0.775 V

General

Power requirements	220 V ac, 50/60 Hz (240 V ac adjustable by authorized Sony personnel)
Power consumption	50 watts
Dimensions	Approx. 430 × 105 × 390 mm (w/h/d) (16⅞ × 4⅛ × 15⅜ inches) including projecting parts and controls
Weight	Approx. 10.0 kg (22 lbs 1 oz)

LED peak program meters

Response range	−40 dB to + 10 dB
Frequency response	20 - 20,000 Hz ±1.5 dB
Response time	1 millisecond
Decay time (from 0 dB to −20 dB)	750 milliseconds
Overshoot	none
Indicator elements	30 elements for each channel

Note

Appliance conforms with EEC Directive 76/889 regarding interference suppression.

FEATURES

Three-head system

Separate record and playback heads allow optimum gap settings and impedance ratings for distortion-free recording and greatly extended frequency response. For good tape-to-head contact the heads are mounted in one block and each head is separately adjusted for precise azimuth alignment. The three-head system also enables you to monitor the recorded tape while actually recording.

Newly-developed LA (LaserAmorphous) heads

The record and playback heads are made of a special amorphous magnetic alloy developed by Sony, and its cores are solidly welded by laser. This new highly-durable head provides a wider dynamic range and a more extended frequency response, especially in the high-frequency range. The head is designed to take full advantage of the potential of the metal tapes.

Closed-loop dual-capstan tape drive system

Two pairs of capstans and pinch rollers ensure uniform tape tension and stable tape-to-head contact. As a result, wow and flutter and modulation noise are greatly reduced.

Very stable tape speed

The motors for the capstan and reel drives are linear torque BSL (brushless and slotless) motors with an extremely smooth torque. The speed of the capstan motor is regulated by a crystal oscillator. The shaft of the capstan motor drives the tape directly to eliminate any fluctuation in the tape speed which might be caused by belts or idlers.

Bias and record level calibration

Bias current can be precisely adjusted to the optimum level for any tape on the market, assuring the flattest possible frequency response. Furthermore, the sensitivity of the tape can be compensated for, permitting optimum performance of the Dolby NR system.

Vibration-free aluminum alloy chassis

The chassis of the tape transport mechanism is made of 3 mm (⅛ in.) thick aluminum alloy plate, which suppresses resonance of the chassis and greatly reduces the transmission of vibration to the tape.

The chassis of the amplifier section is of copper-plated steel having 5 sides, which prevents eddy-current from circulating and reduces harmonic distortion.

High-quality amplifier section

This cassette deck incorporates a dc amplifier design which assures true fidelity down to the dc region.

The recording section and the playback section of the right and left channels are physically separated with the signal paths of the right and left channels parallel, using the symmetric Dolby NR ICs. The channel circuits themselves are well separated by a busbar to eliminate interference.

The electronic components used have been carefully selected to provide the highest possible sound quality, as exemplified by the gold-plated input and output jacks and the use of a newly-developed dual FET.

FUNCTION OF CONTROLS

The numbers in the photo are keyed to the following explanations.

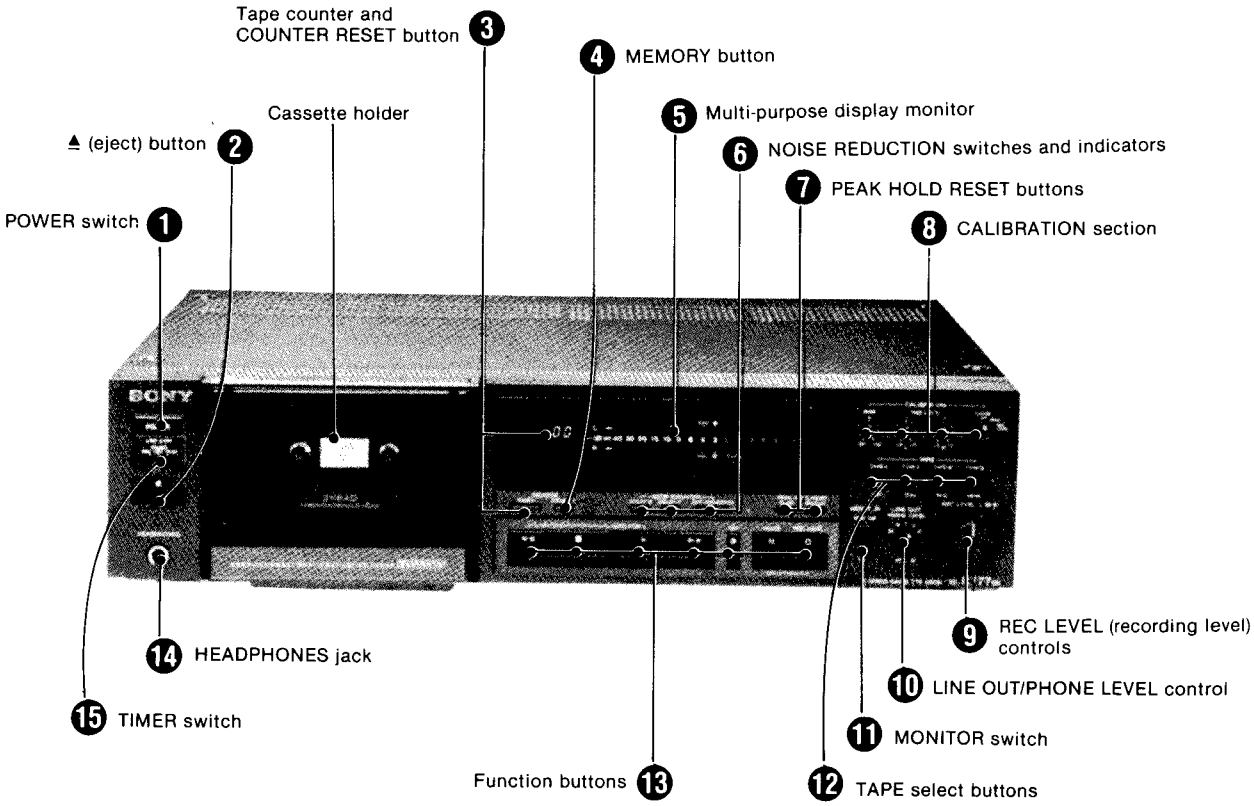

1 POWER switch
Depress this switch to turn on the power. The lamp in the cassette holder, the display of the peak program meters and the tape counter will light up. The ❚❚ indicator lamp of the PAUSE button will blink for about 4 seconds, indicating that the function buttons are inoperative during this period.
Press this switch again to turn the power off.

2 ▲ (eject) button
Press this button to open the cassette holder.

3 Tape counter and COUNTER RESET button
The tape counter shows the tape running time. Press the COUNTER RESET button to reset the tape counter to ".00."

4 MEMORY button
Press to rewind the tape to the ".00" point on the tape counter. The word "MEMORY" is displayed below the tape counter. Pressing the ► button together with the ◄◄ button automatically starts playback from ".00."
When you do not use the memory function, press this switch again. The word "MEMORY" will disappear.

❺ Multi-purpose display monitor
When the CALIBRATION MODE switch is at the OFF position, the peak program meter scale is displayed. The meter shows the recording level of each channel with the MONITOR switch set at SOURCE and the recorded levels with the MONITOR switch set at TAPE. When the CALIBRATION MODE switch is set to BIAS, the display changes to the scale used for bias calibration and when the switch is set to REC LEVEL, the display changes to the scale for record level calibration.

❻ NOISE REDUCTION switches and indicators
To record or play back using the Dolby* B-type NR system, press the DOLBY B switch. To record or play back using the Dolby C-type NR system, press the DOLBY C switch. The corresponding indicator lights up.
To record or play back without the Dolby NR process, press the OFF (STRAIGHT) switch.

These switches will not operate while the deck is in the record or playback mode.

* "Dolby" and the double-D symbol are trade marks of the Dolby Laboratories Licensing Corporation. Noise reduction system manufactured under license from Dolby Laboratories Licensing Corporation.

❼ PEAK HOLD RESET buttons
You can choose either of two ways to have the peak level indicated:
- When the **AUTO** button is pressed down, successive peaks are held for about 2.5 seconds, except when a higher peak occurs before 2.5 seconds have passed, in which case that peak is immediately indicated.
- When the non-locking **MANUAL** button is pressed, the peak level will be held on the scale until a higher peak occurs, when that peak will be held. To reset the peak held on the meter, just press this button. You will find this method of indicating the peak input useful when you want to know the highest peak of a tape or disc, or when you want to know both the highest peak as well as the intermittent input levels during live recording.

❽ CALIBRATION section
These dials are used for the bias and recording level calibration.

❾ REC LEVEL (recording level) controls
These controls adjust the recording level. The knob nearest the panel is for the left channel and the other knob for the right channel. To adjust the level of the left or right channel only, turn the appropriate knob while holding the other knob.

❿ LINE OUT/PHONE LEVEL control
This control governs the output level of the VARIABLE LINE OUT jacks as well as the headphone level. At the "0" position, the output level of the VARIABLE LINE OUT jacks is rated at 0.435 V and the headphone level is rated 77.5 mV (at a load impedance of 8 ohms). When this control is set to the "3" position, the level is reduced by 3 dB, and by setting it to "6," "12," or "24," the level is reduced by that amount, i.e., by 6 dB, 12 dB, or 24 dB, from the rated output obtained at the "0" position.
These settings do not affect the peak program meters or the output level of the FIXED LINE OUT jacks.

⓫ MONITOR switch
When adjusting the recording level, set this switch to SOURCE to allow monitoring of the sound to be recorded. During playback, set this switch to TAPE to allow monitoring of the recorded sound. During recording, use this switch to monitor either the source or the recorded sound.

⓬ TAPE select buttons
Depress the TAPE button corresponding to the type of tape being used. The type of tape will be displayed on the display monitor.

⓭ Function buttons
It is possible to switch directly from one mode to another.

- ◄◄ **(rewind) button:** Press this button to rewind the tape. This button is also used, with the ► button, to initiate auto play.
- ► **(forward) button:** Press this button to play the tape back. To record, press this button while holding the ● button down.
- ►► **(fast-forward) button:** Press this button to advance the tape rapidly.
- ● **(record) button:** Press this button together with the ► button to start recording. Also press this button before adjusting the recording level.
- ■ **(stop) button:** To stop the tape, press this button. The tape will stop automatically when it is completely wound in either direction.
- II **PAUSE button:** To pause for a moment during recording or playback, press this button. This button is also used to control more precisely the start of recording and to release the record muting mode.
- O **REC MUTE (record muting) button:** Press this button to eliminate unwanted material and to insert a blank space during recording.

⓮ HEADPHONES jack
Headphones may be inserted either to monitor the input signals to be recorded or to listen to a recording in the playback mode.
Headphone volume is adjustable with the LINE OUT/PHONE LEVEL control.

⓯ TIMER switch
You can set the unit to record or play back at a predetermined time by connecting any commercially available timer. To record, set this switch to REC. To play back, set it to PLAY.

MPX FILTER switch
Normally set this switch to OFF.
When recording FM stereo broadcasts with the Dolby NR system, set it to ON if the 19 kHz pilot signal and the 38 kHz subcarrier have not been adequately suppressed by the FM tuner or receiver. The word "FILTER" will be displayed on the monitor.
If the tuner or the receiver suppresses such signals adequately (most high-quality tuners and receivers will), you do not have to set this switch to ON.

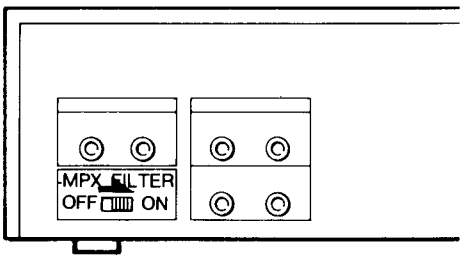

SECTION 1
OUTLINE

1-1. CIRCUIT DESCRIPTION

Linear Counter

This set uses a new type electrical tape counter, instead of the conventional belt-driven mechanical tape counter, by adopting a microcomputer. This tape counter displays the tape-travelling time linearly in actual time in continuous record and playback modes. The tape-travelling time is calculated by the microcomputer IC3 by determining the rotational speeds of the reel spindles. This is done by detecting various factors such as the diameters of the remaining and wound tapes in the supply and take-up reel spindles, diameter of fully-wound tape, diameter of the reel hub, and the tape-travelling speed. This linear tape counter is intended for cassette tapes C-60, C-90 and C-120. The tape counter can not be used with cassette tapes C-46 and C-30. However, the display of the counter also runs linearly when using cassette tapes C-30 and C-46.

In the supply and take-up reel spindles, there is a magnet magnetized at the plural poles, which detects the rotation at the hall elements (HE1005, 1006), then obtains signals as to the rotation speed of supply and take-up reel spindles. These signals are applied to IC803, IC802 and amplified. The pulse output generated here is applied to terminals (23) and (24) of IC3 (microcomputer). IC3 processes and corrects the operation to make the pulse counting for one count per second, and processes carry and decarry operations. Terminals (6) to (13) output signals for each segment. Terminals (16) to (19) output grid-drive signals for the fluorescent display tube. Due to these output signals, the display tube displays four-digit digital minutes/seconds figures in a linear (time-wise) manner.

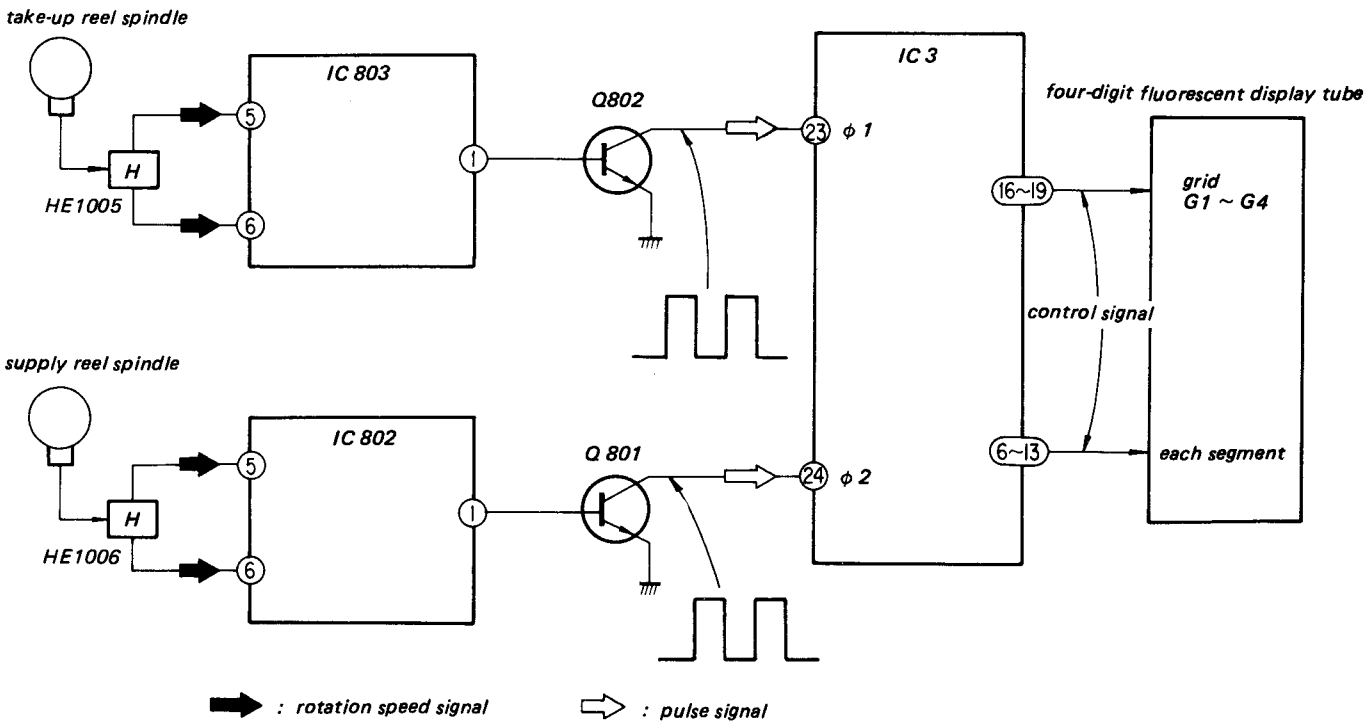

1-2. BLOCK DIAGRAMS

– Audio Amp Section –

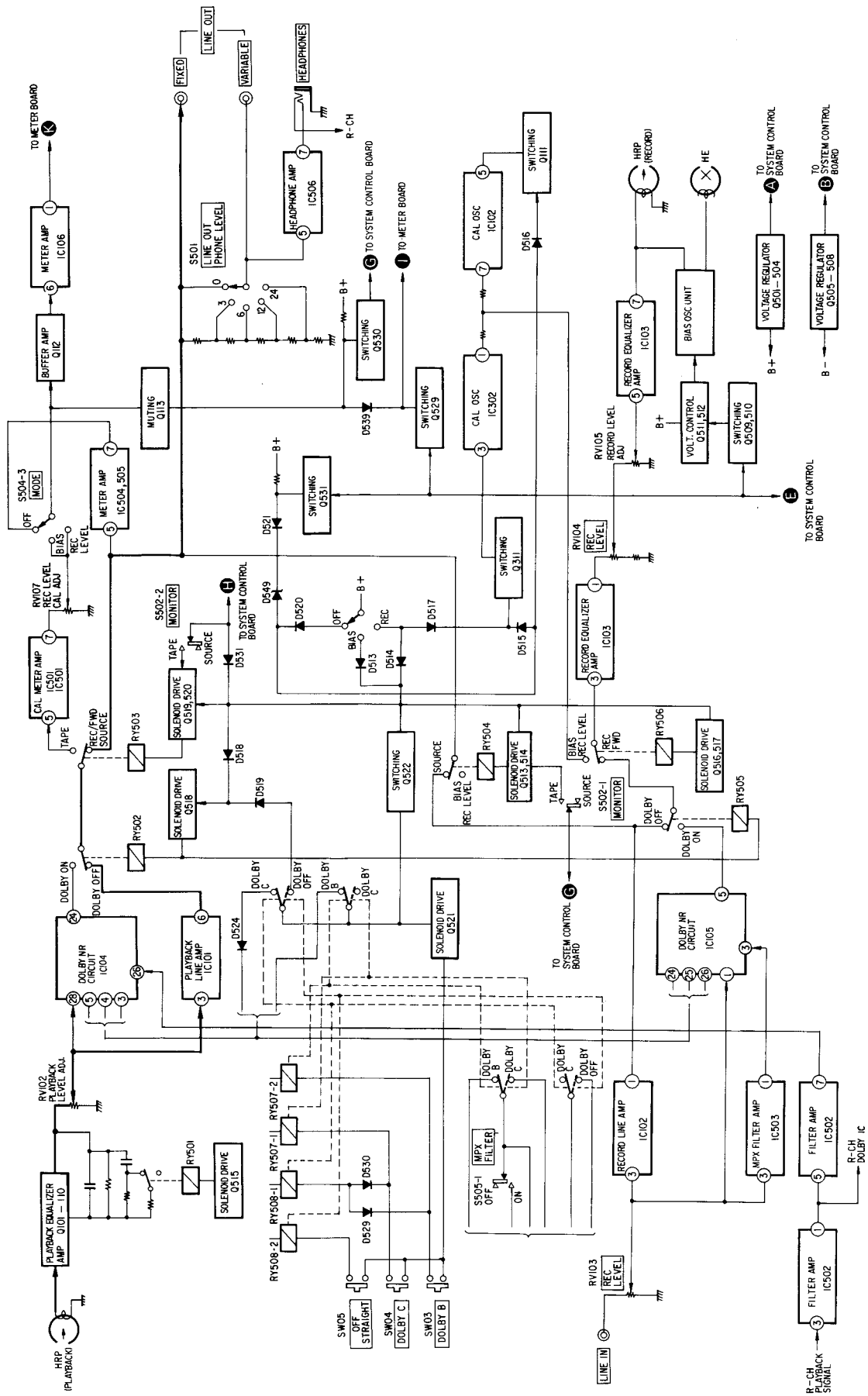

– System Control and Servo Amp Section –

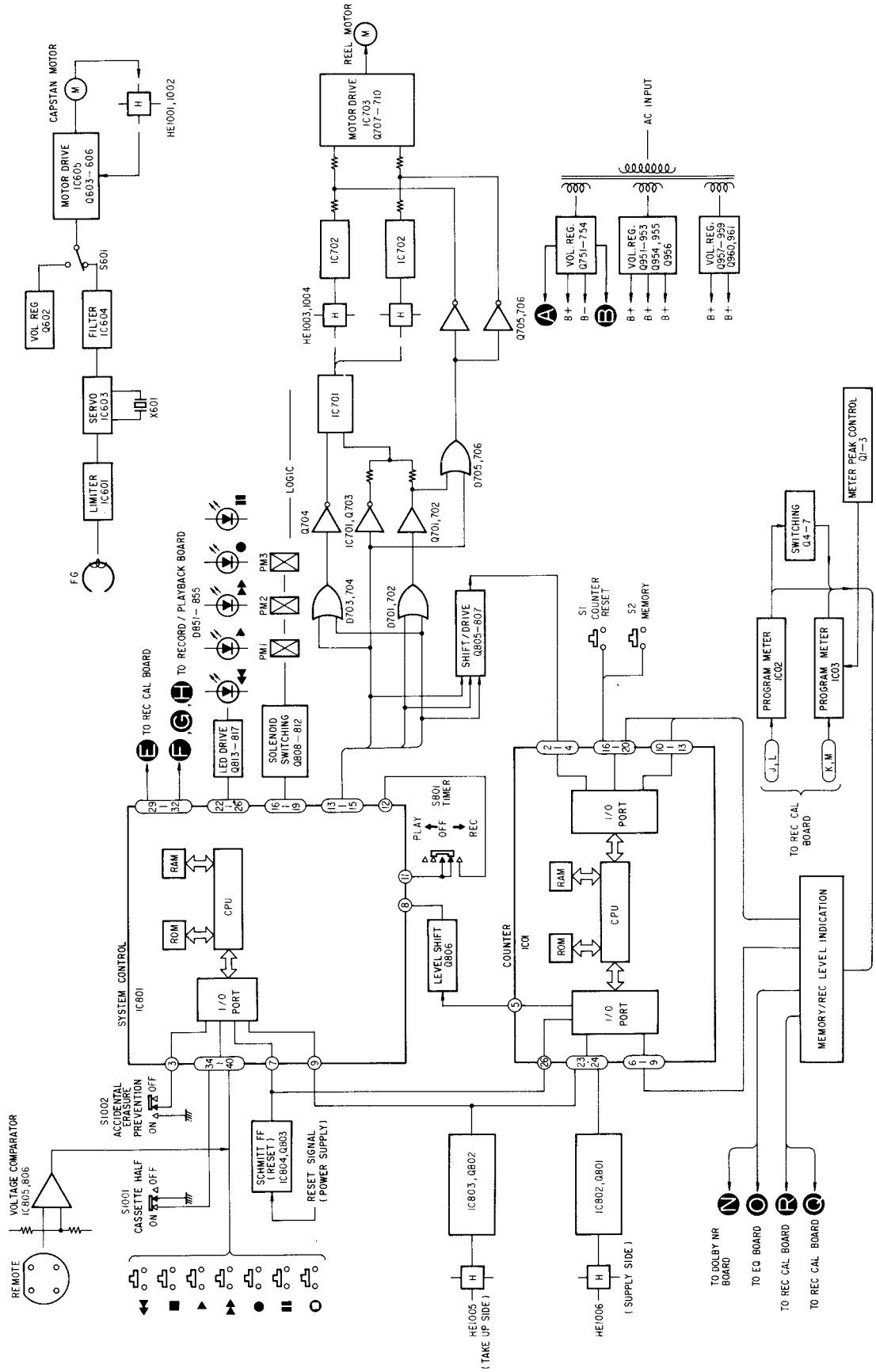

SECTION 2
DISASSEMBLY

Note: Follow the disassembly procedure in the numerical order given.

TOP COVER

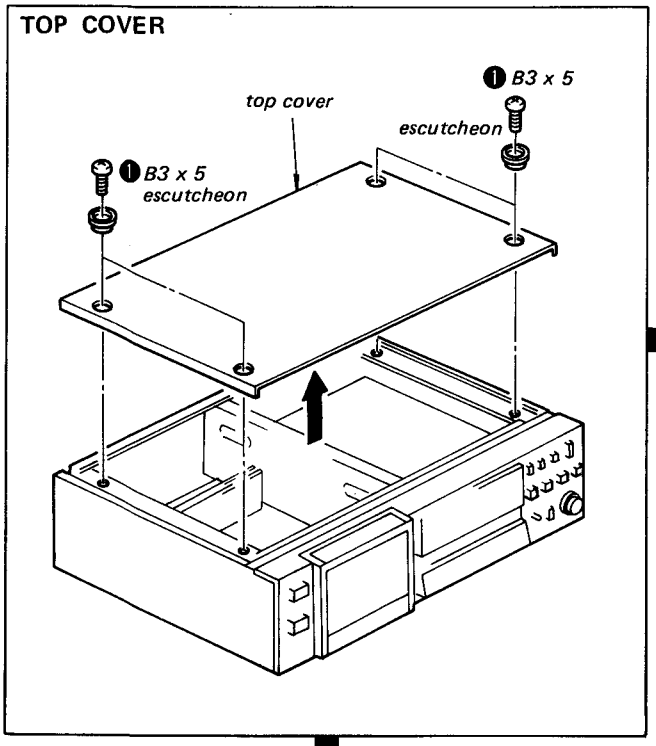

SERVO BOARD

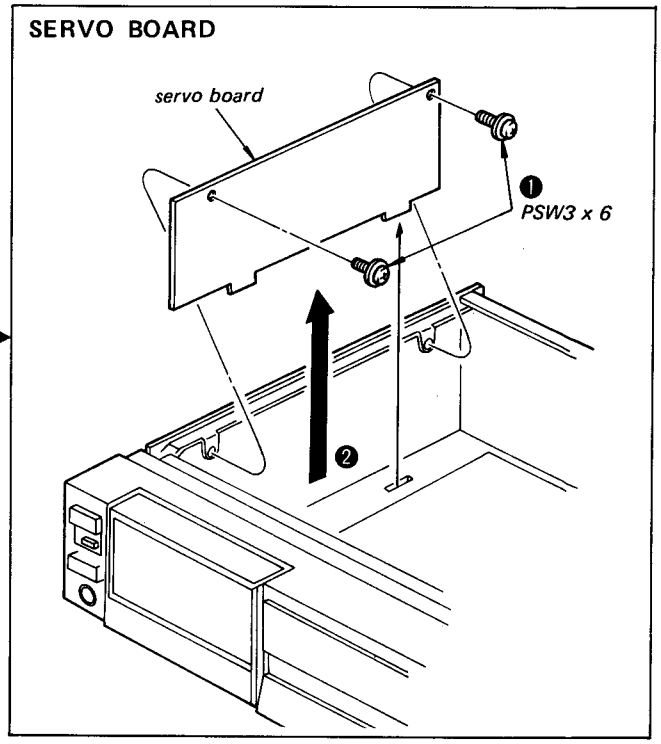

ORNAMENTAL SIDE PLATES

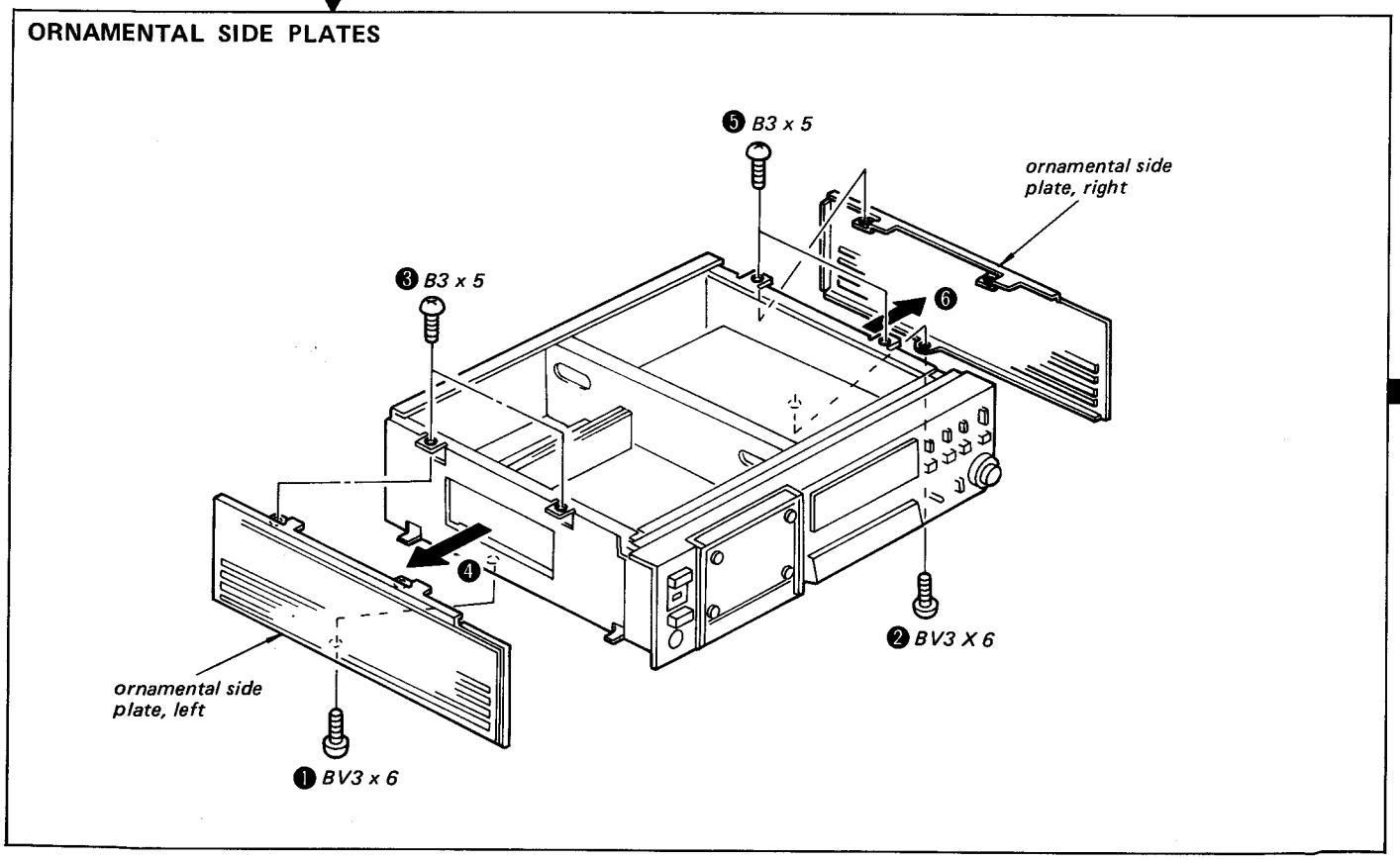

BOTTOM PLATE

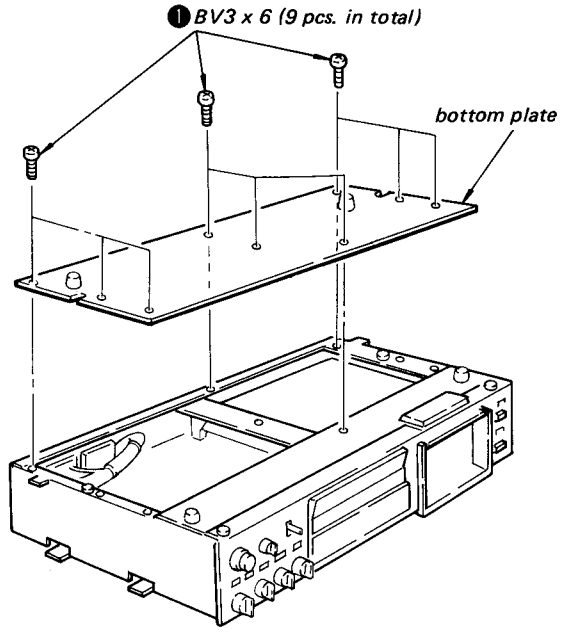

- Dolby NR board and system control board can be checked.

MECHANICAL DECK COVER, HEAD SHIELD PLATE

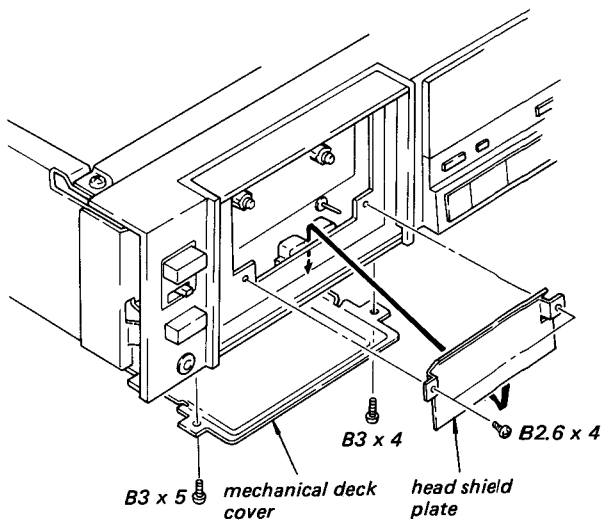

- The area around the head can be checked.

POWER TRANSFORMER

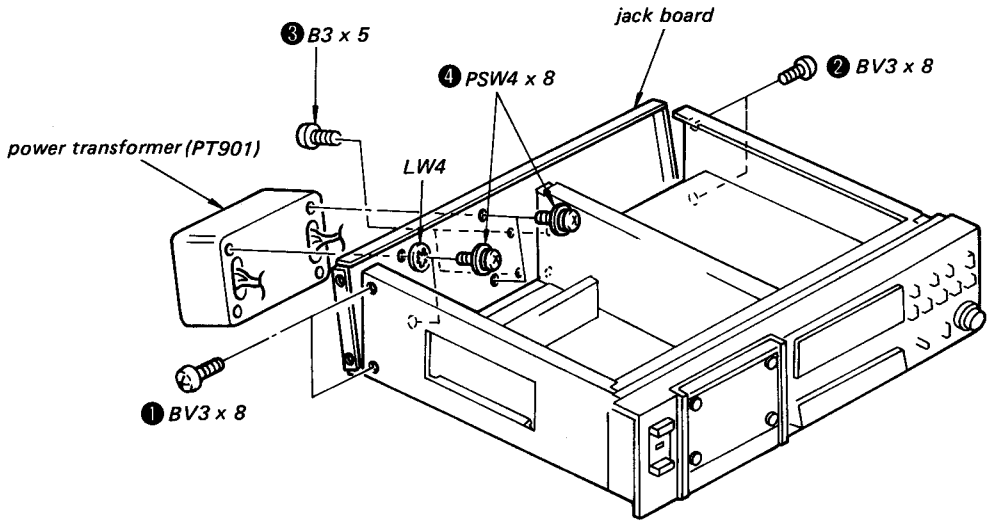

- Remove the top cover (See page 8)

PANEL

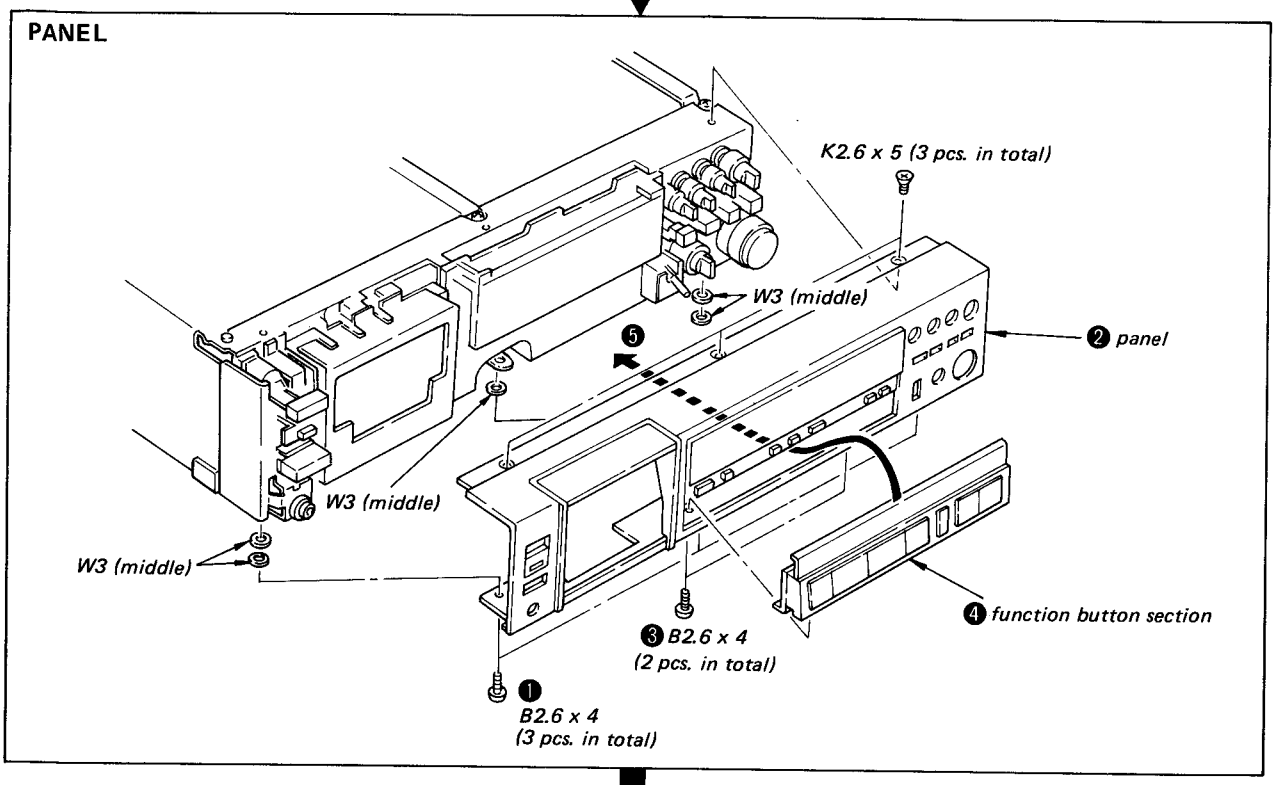

MECHANICAL DECK

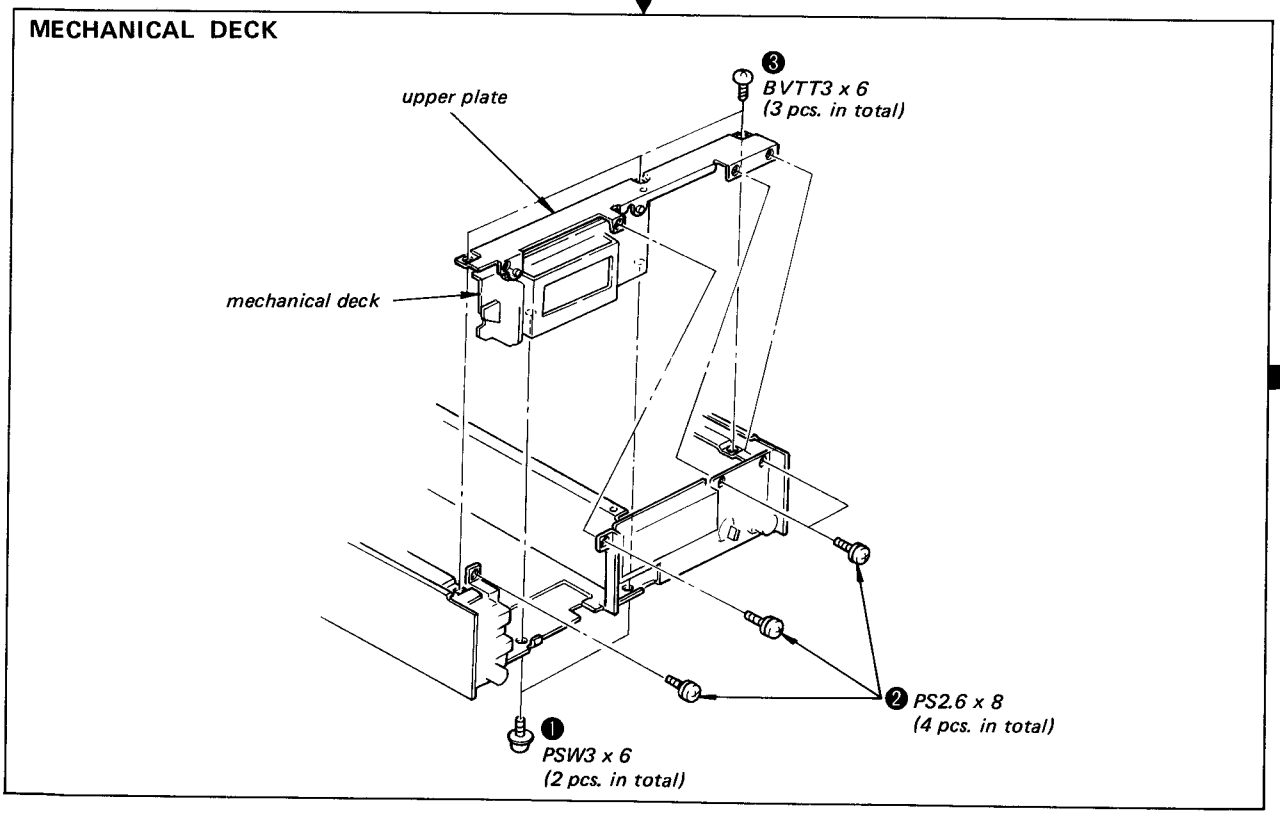

REC CAL BOARD

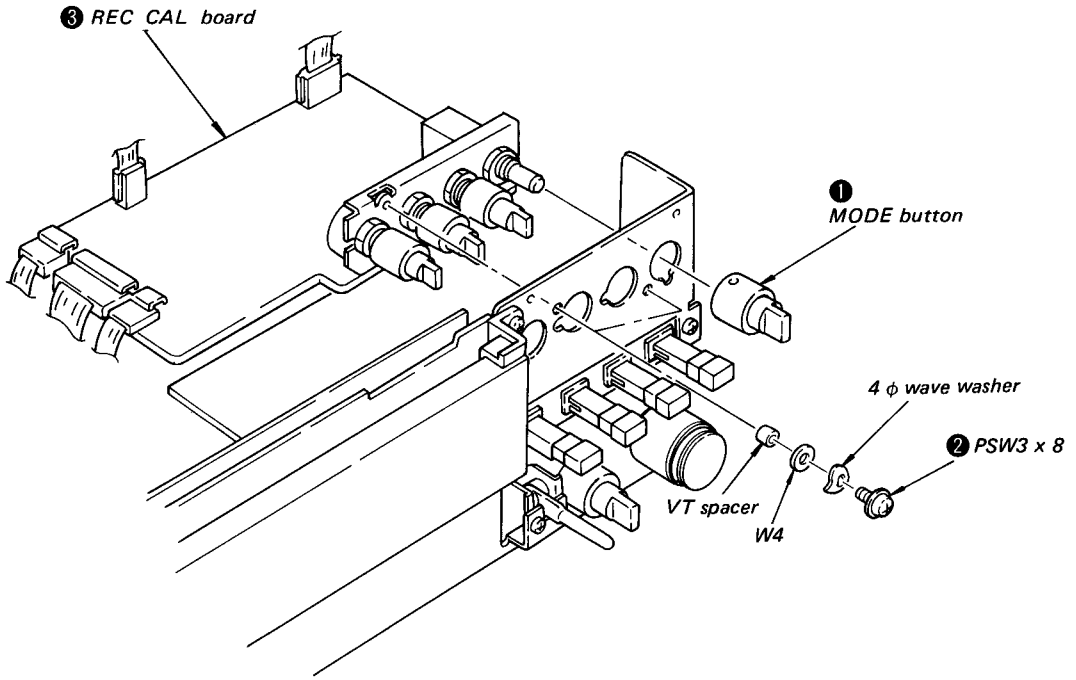

AMP CHASSIS (B) SECTION

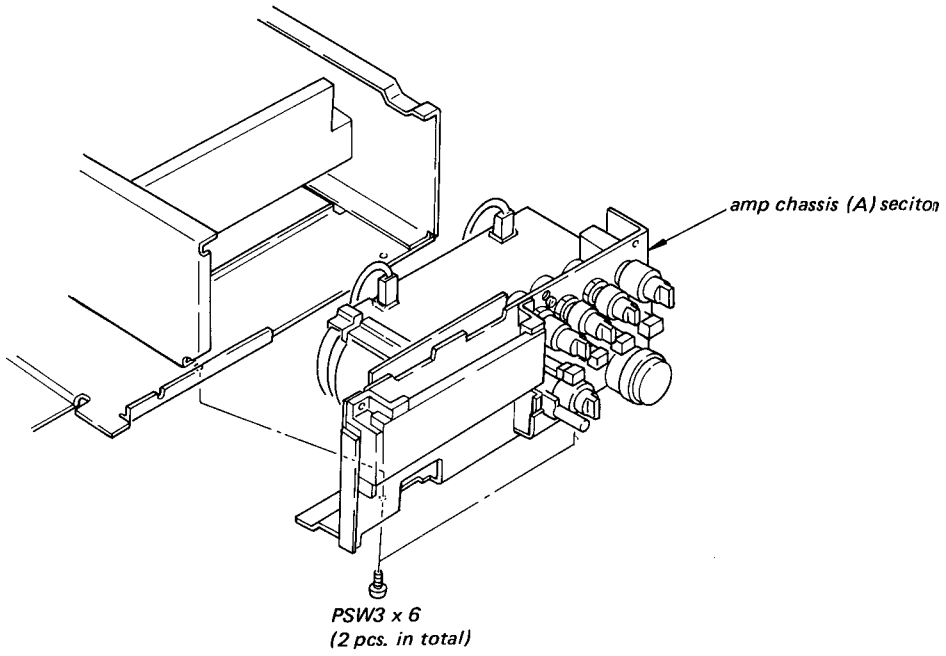

EQ BOARD

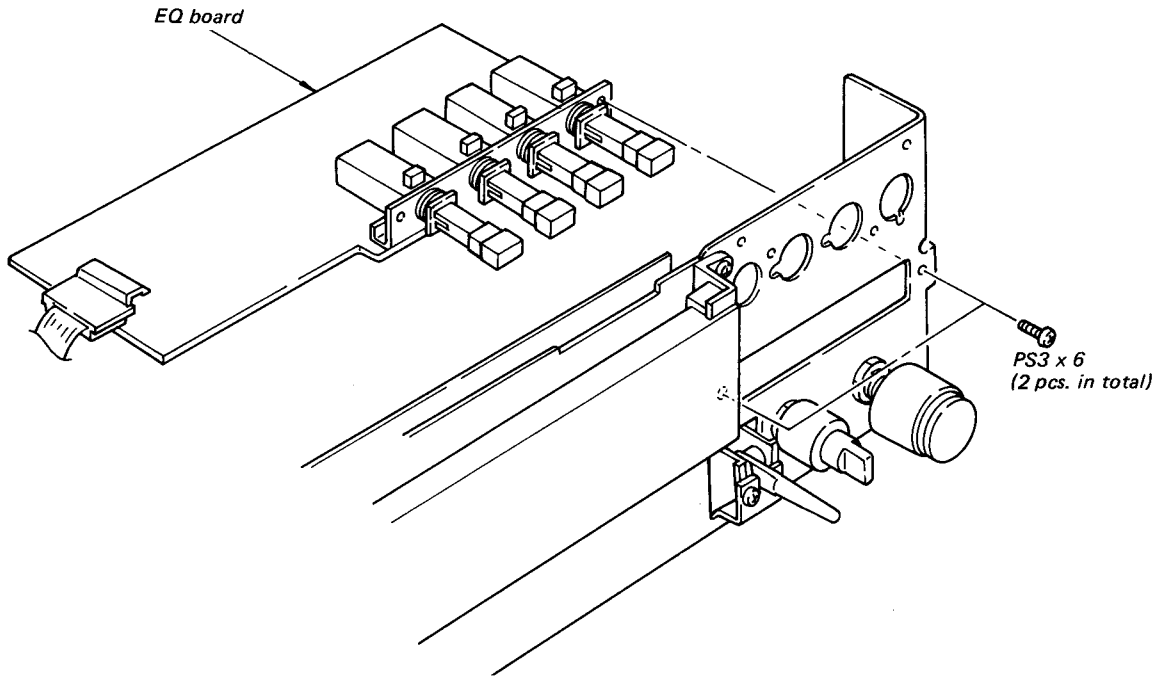

OUTPUT BOARD, REC LEVEL BOARD

❶ – ❸ : output board
❹ , ❺ : REC LEVEL board

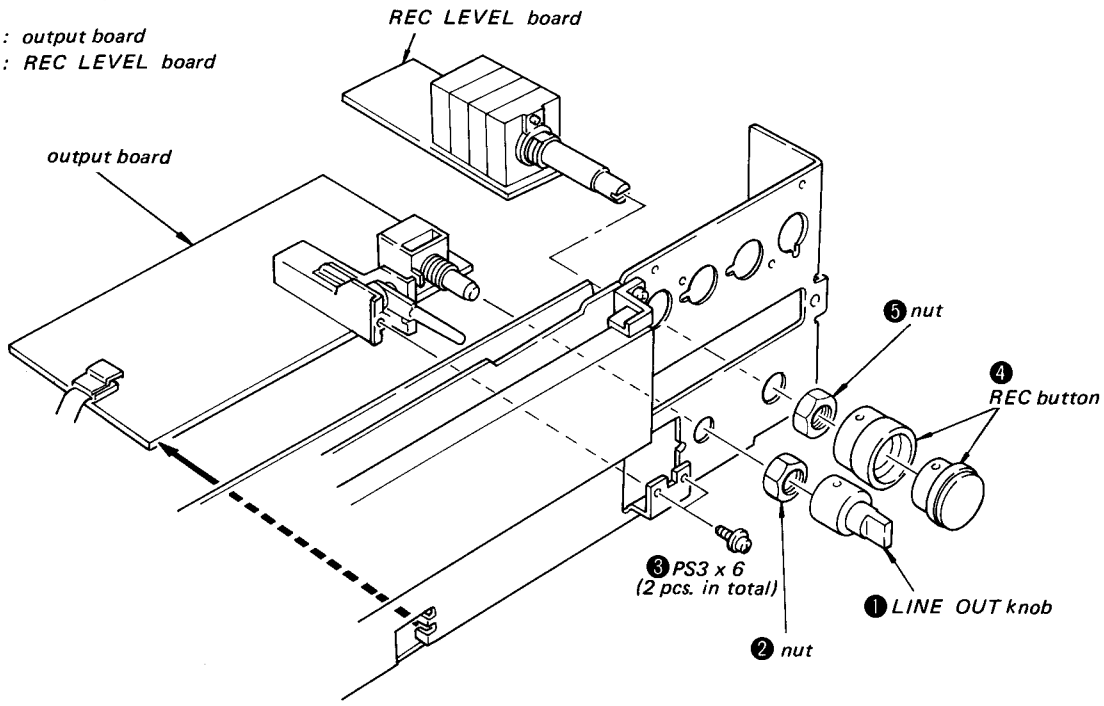

- MECHANISM SECTION REMOVAL

MOTOR BOARD (CAPSTAN MOTOR SECTION), CAPSTAN BELT

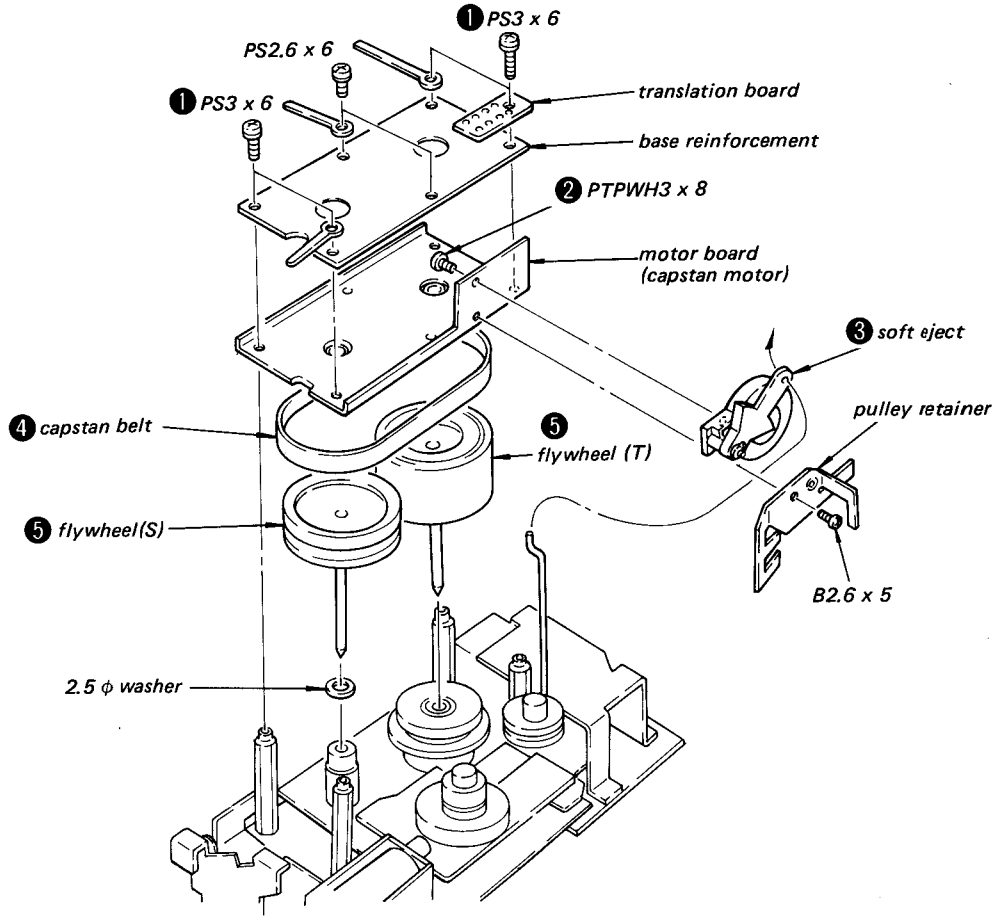

SUB CHASSIS (REEL MOTOR SECTION), TAKE-UP BELT

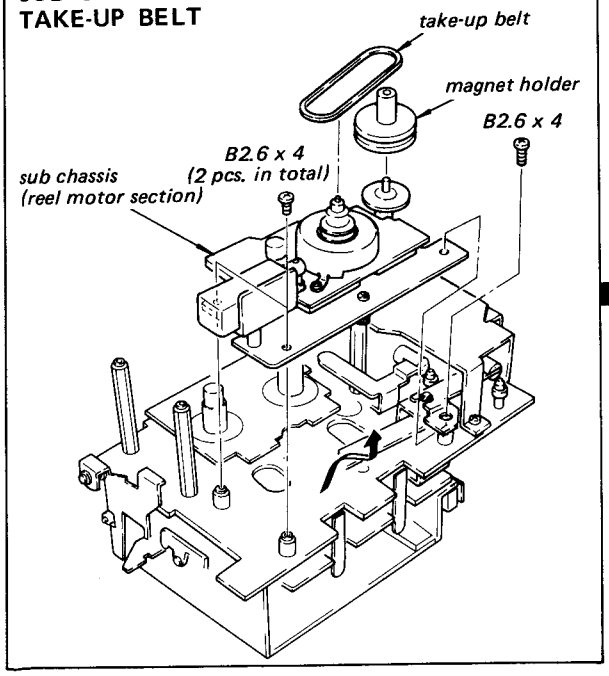

REEL TABLE CLAW (USE OF HEXAGONAL WRENCH (0.89))

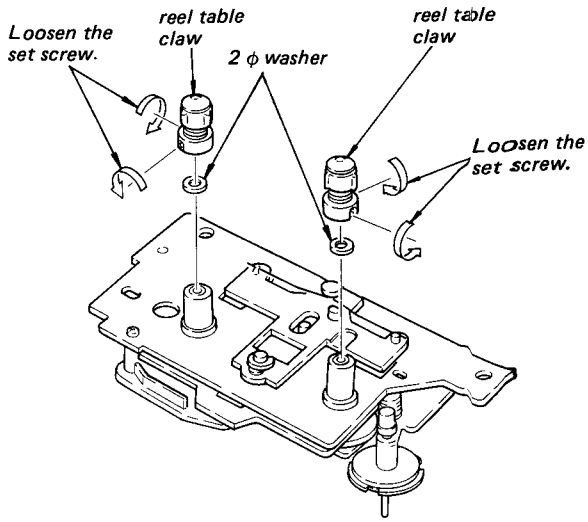

CASSETTE HOLDER

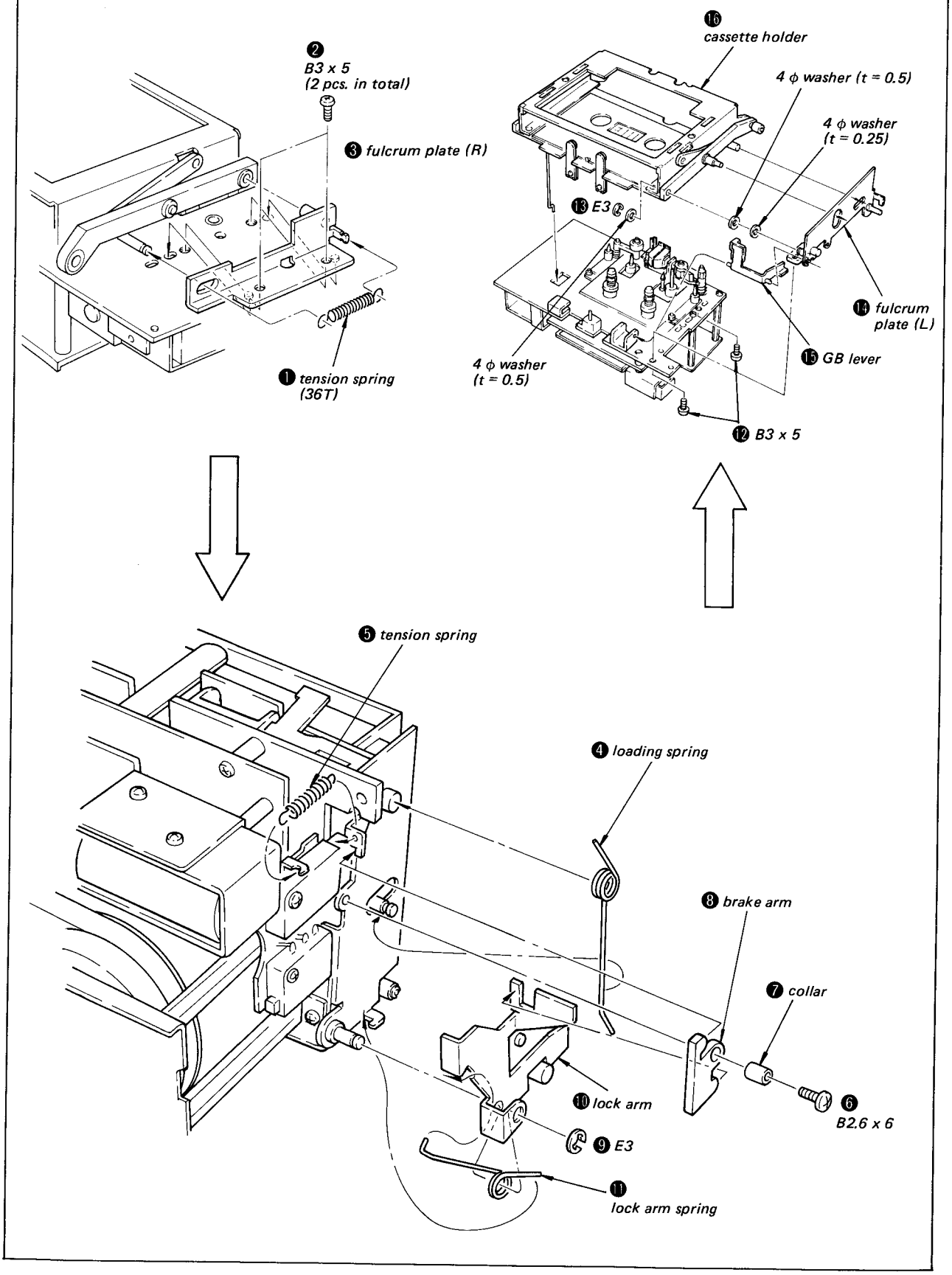

- **MECHANISM SECTION WIRING REFERENCE DIAGRAMS**

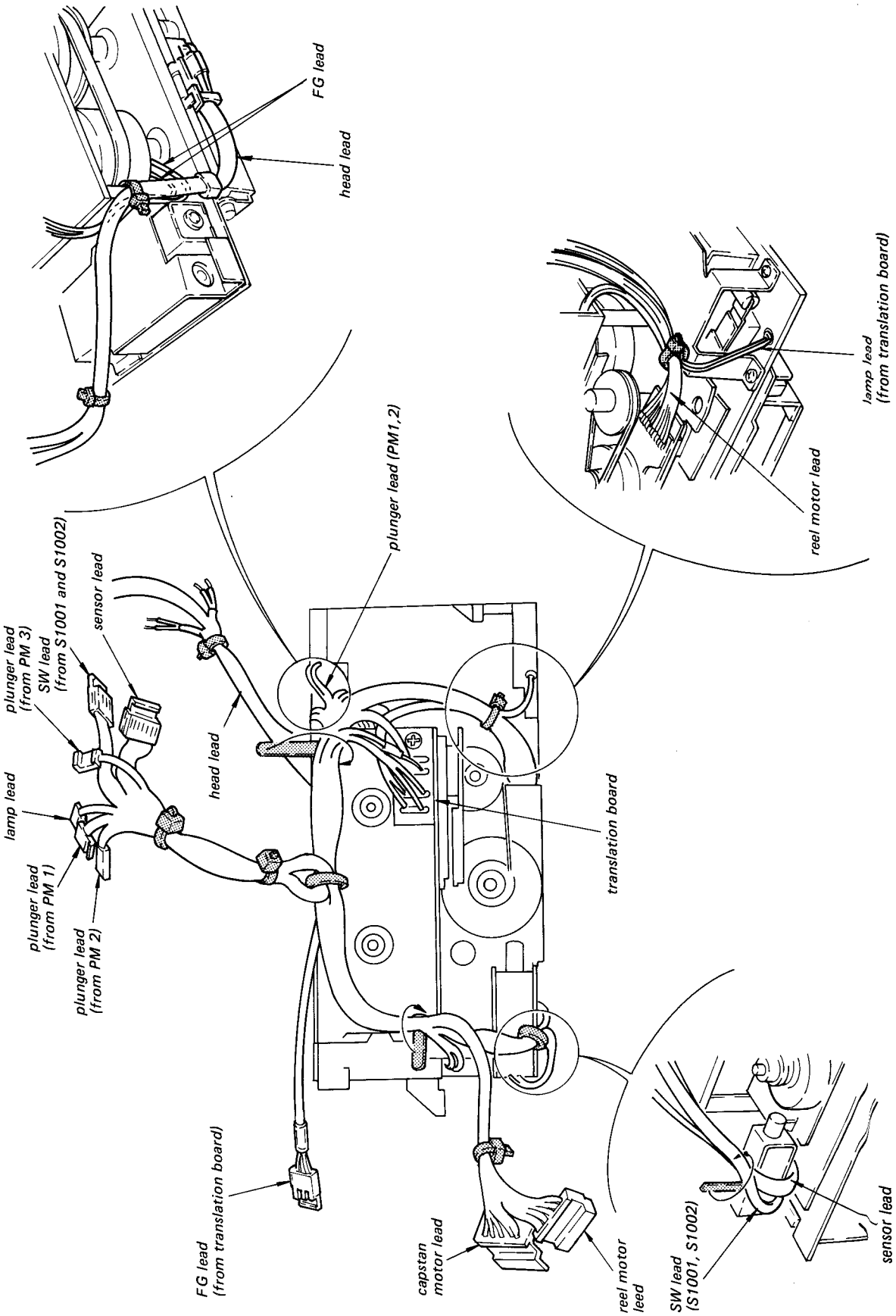

SECTION 3
ADJUSTMENTS

3-1. MECHANICAL ADJUSTMENTS

Precaution

1. Clean the following parts with a denatured alcohol-moistened swab.

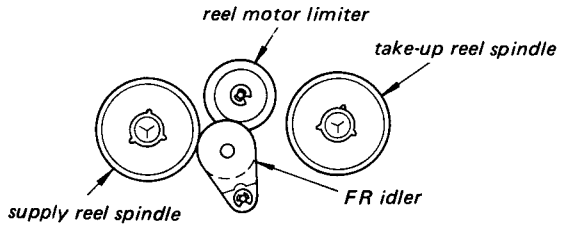

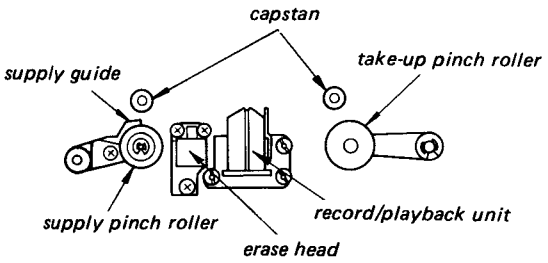

2. Demagnetize the record/playback head with a head demagnetizer.
3. Do not use a magnetized screwdriver for the adjustments.

Pinch Roller Pressure Adjustment

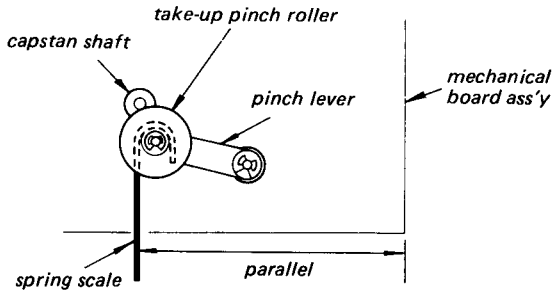

1. Make sure that the capstan shaft and pinch roller are parallel.
2. In forward mode, pull the spring scale slowly so that it is parallel to the surface of the mechanical board ass'y and read the spring scale when the pinch roller starts rotating.

Specification

	pinch roller pressure
take-up side	220 – 380 g
supply side	180 – 280 g

3. If necessary, change the position of pinch roller plunger. (Refer to Pinch roller/Head Plunger Position Adjustment on page 18.)

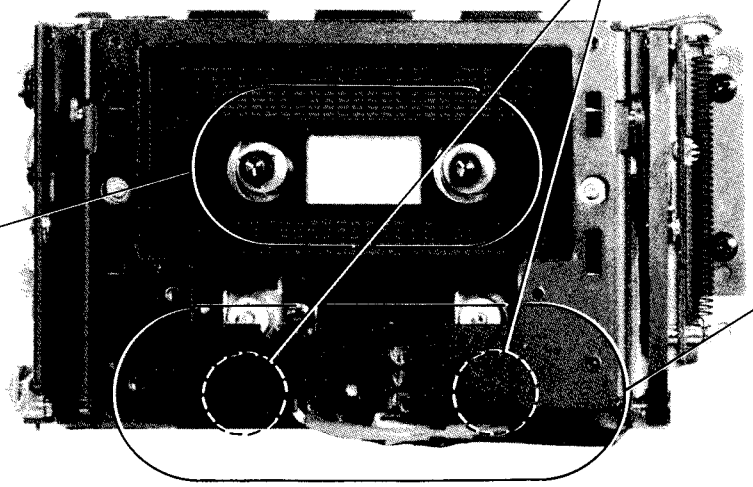

Brake Torque Adjustment

Specification

Tight side: 100 — 200 g·cm(1.4 — 2.8 oz·inch)
Slack side: less than 90 g·cm(1.3 oz·inch)

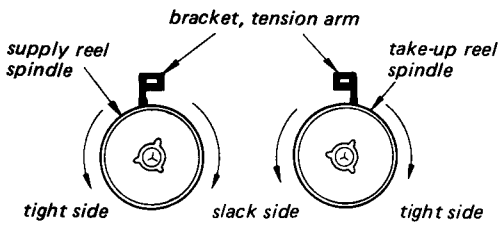

Cassette Holder Operation

1. Insert a cassette tape (C-90 with erasure prevention tab) into the cassette holder and push the portion shown by the arrow. Make sure that the cassette holder is locked, the GB lever ass'y is lowered and the lock arm returns completely.
2. Make sure that the cassette holder opens smoothly in 0.6 —1.5 seconds.

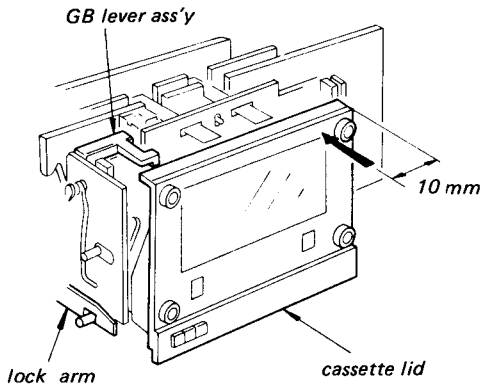

Head Height Adjustment

Insert a mirror cassette or adjustment cassette and adjust screws Ⓐ – Ⓒ so that hte tape enters the tape guide of the record/playback head smoothly when pushing the head base out by hand.

1. Make an adjustment cassette as shown below or use a mirror cassette.

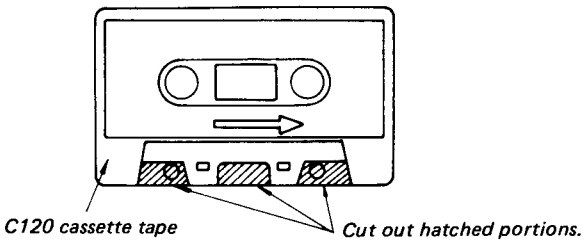

2. Install the mirror cassette (or adjustment cassette) in the set. In playback mode, the tape should not curl at the portions shown by arrows (tape guides) in Fig. a.
   If the tape curls, adjust the height of tape guide of supply pinch roller.

Adjustment locations:

adjustment screw of tape curl in Fig. b
(Be careful not to turn the screw more than 1/2 turn.)

3. Back tension: 0
   Make sure that there is no tape twist at portions ⓐ – ⓓ.
   1. When the tape twists upwards:
      Turn adjustment screws Ⓑ, Ⓒ of the record/playback head and recline the head as shown in Fig. C.
   2. When the tape twists downwards:
      Turn adjustment screws Ⓑ, Ⓒ and recline the head as shown in Fig. D.
4. Measure the height of erase head.
   If it is out of the range indicated in Fig. e, follow the procedures below.
   1. When the height of erase head is out of the range:
      Adjust the height by screws Ⓓ, Ⓔ, Ⓕ of the erase head.
   2. After adjusting the height of the erase head, make sure that the head is not inclined. If necessary, loosen or tighten adjustment screw Ⓓ.

Fig. a

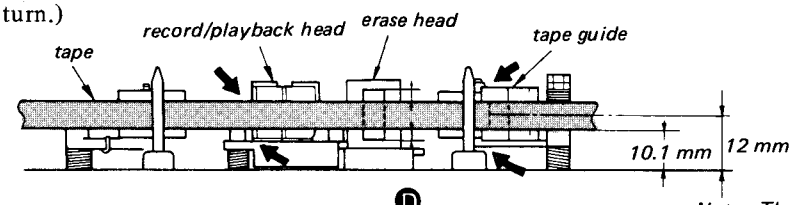

Note: The values shown are for reference purposes.

Fig. b

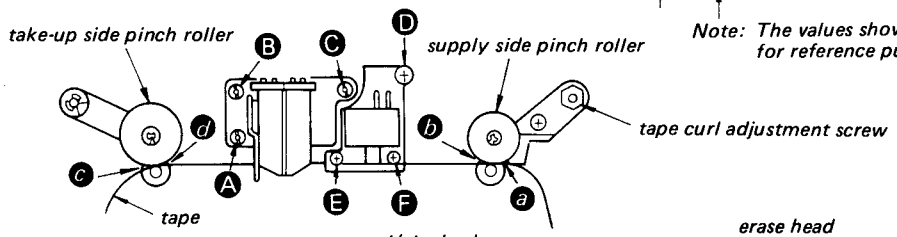

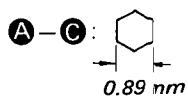

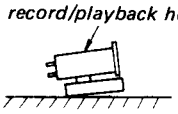

Fig. c

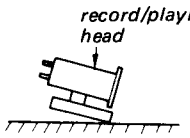

Fig. d

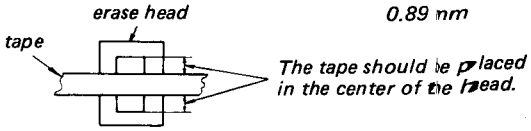

Fig. e

Pinch Roller/Head Plunger Position Adjustment

1. Position the head plunger so that clearance Ⓐ is 0.3 mm.
2. Move the head plunger and the pinch roller plunger and adjust the position of the pinch roller plunger so that the pin pressure spring can move in the range of 0.8 mm — 1.2 mm.
3. Lock the plunger screw with suitable locking compound.

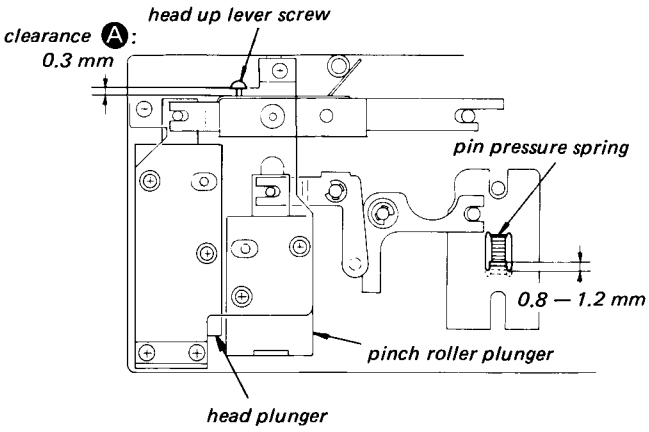

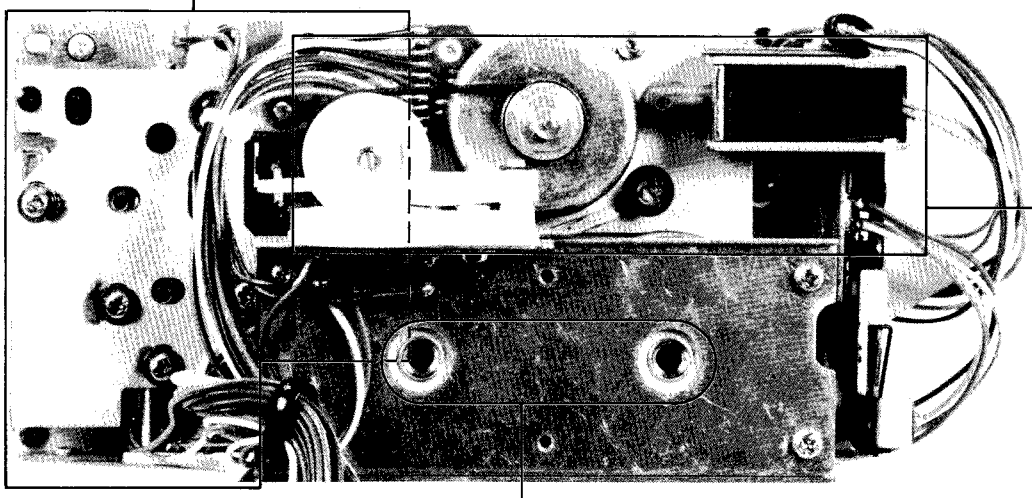

Take-up Side/Supply Side Flywheel Thrust Adjustment

1. Take-up Side Flywheel
   Insert a spacer of 2.4 mm between the flywheel magnet and motor board and adjust the position of the magnet so that clearance Ⓐ is between 2.3 mm and 2.5 mm.
2. Supply Side Flywheel
   Tighten the thrust adjustment screw lightly till the flywheel does not move and then loosen it by 1/2 – 3/4 turns.
3. After the adjustment, lock the adjustment screw with suitable locking compound.

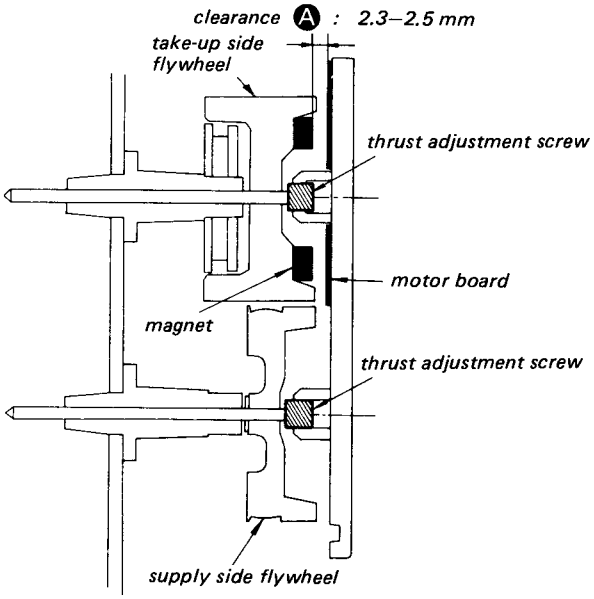

Forward Torque/Back Tension Torque Adjustment

1. Loosen adjustment screws of the forward torque and back tension torque till the magnet holder does not move and then turn them by 1/2 turn clockwise.
2. Connect the cassette torque meter (CQ-102B) and measure forward torque and back tension. If they do not meet the specifications, adjust the back tension adjustment screw.

Specifications:

forward torque	35 – 45 g·cm
back tension torque	5.5 – 7.5 g·cm

3. Lock the adjustment screw with suitable locking compound.

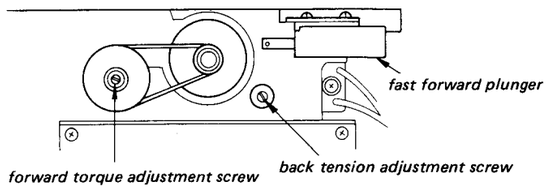

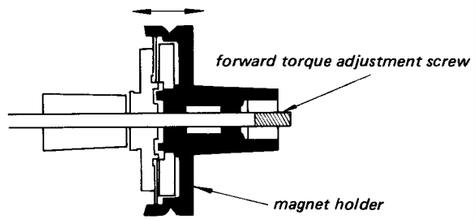

Check of BT Stopper Position

1. Loosen the BT stopper adjustment screw, push the mode select lever in the direction of arrow Ⓐ and fix the BT stopper to the reel spindle with the adjustment screw.
2. Move the brake arm in the direction of arrow Ⓑ, remove the brake from the reel spindle and confirm that the BT drum does not rotate together with the reel spindle.
3. Make sure that the clearance between the mode select lever and the brake arm is more than 1 mm when the mode select lever returns to its original position.

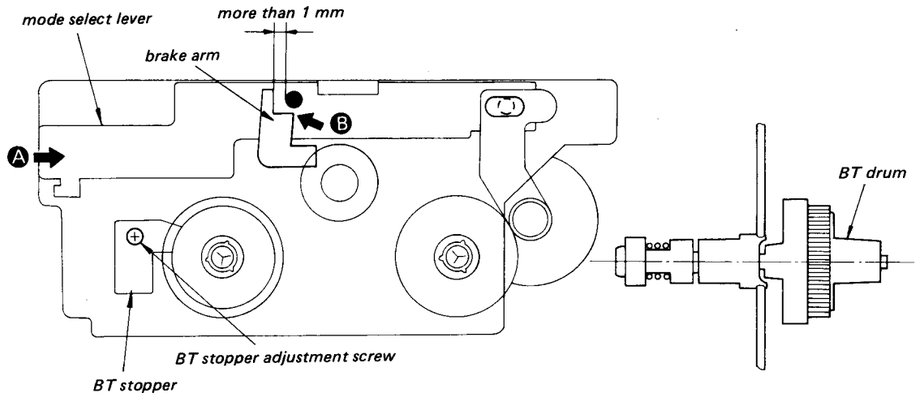

Fast Forward Plunger Position Adjustment

1. Push the fast forward plunger.
2. Turn the reel motor clockwise (fast forward mode). When the idler and the reel spindle come into contact, adjust the position of the fast forward plunger by loosening the screw so that the clearance between the FR arm and the mode selector lever pin is between 0.4 mm and 0.6 mm.
3. Next, turn the reel motor counterclockwise (rewind mode) and adjust to obtain the same result as in step 2.
4. Lock the screw with suitable locking compound.

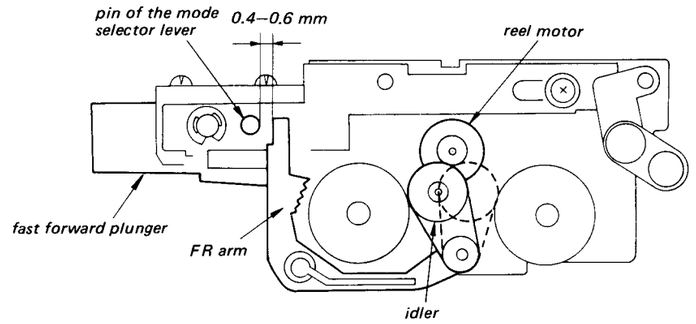

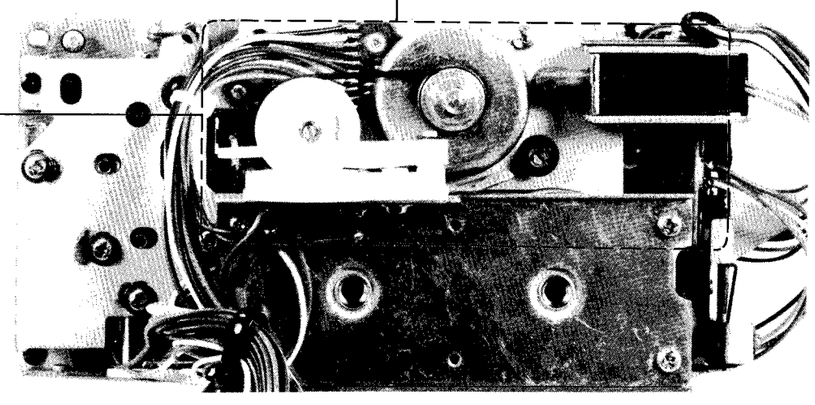

3-2. ELECTRICAL ADJUSTMENTS

Note: The adjustment should be performed in the order given in this service manual. The adjustments should be performed for both L-CH and R-CH.

- Set the TAPE switch according to the test tape as follows.

Tape	TAPE Switch
CS-15	TYPE I
CS-25	TYPE II
CS-30	TYPE III
CS-40	TYPE IV

- Switches and controls should be set as follows unless otherwise specified.

CALIBRATION MODE ..... OFF
REC LEVEL (L/R) ..... MED
CALIBRATION BIAS
REC LEVEL ..... MED
DOLBY NR ..... OFF
TAPE ..... TYPE I
LINE OUT ..... 0 dB
MONITOR ..... SOURCE
TIMER ..... OFF

- Standard Record:

Deliver the standard input signal level to the input jack and set the REC LEVEL control to obtain the standard output signal level.

Standard Input Level

Input Terminal	LINE IN
source impedance	10 kΩ
input level	0.25 V (−10 dB)

Standard Output Level

Output Terminal	LINE OUT	HEADPHONES
load impedance	47 kΩ	8 Ω
output level	0.44 V (−5 dB)	39 mV (−26 dB)

1. Record/playback Head Azimuth Adjustment

Procedure:

1. Loosen the adjustment screw.
2. Mode: playback

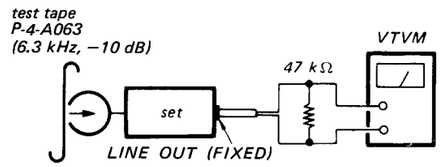

3. Turn the adjustment screw for the maximum output levels. If these levels do not match, turn the adjustment screw until both of output levels match together within 0.5 dB.

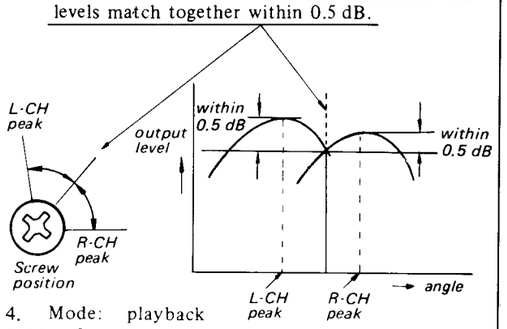

4. Mode: playback

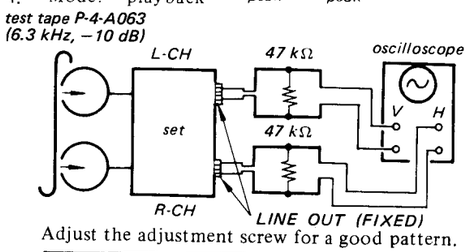

Adjust the adjustment screw for a good pattern.

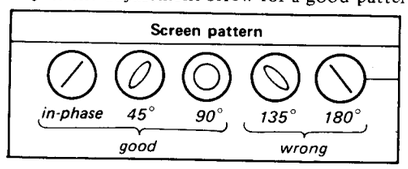

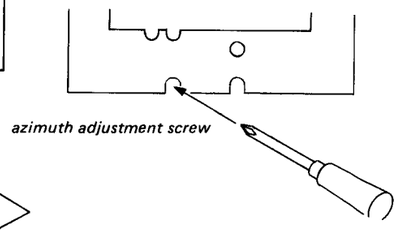

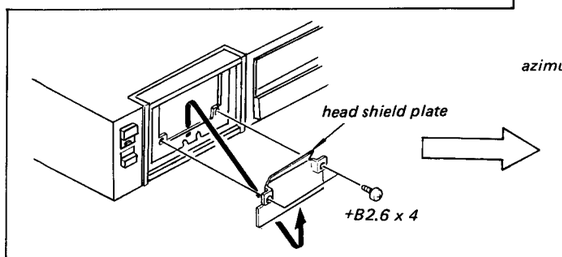

2. Record Head Azimuth Adjustment

Record head azimuth adjustment should be made later than playback head azimuth adjustment.

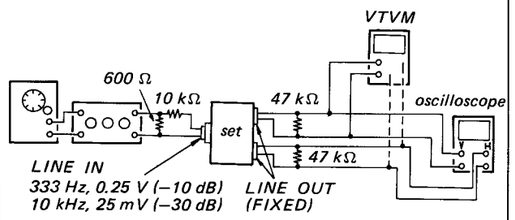

Adjust	VTVM Reading	On the Oscilloscope				
record head azimuth adjustment screw	maximum	in-phase	45°	90°	135°	180°
		good			wrong	

Note: If the maximum peaks for L–CH and R-CH do not coincide, set the screw to the mechanical mid of the two positions for the peaks. At this time, the level should change no more than 1 dB from the maximum peaks.

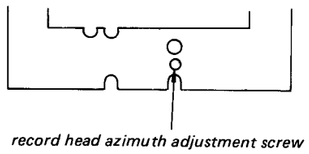

3. Speed Detecting Head Adjustment

Procedure:

1. Install blank cassette tape CS-15 and set the unit in fast-forward or rewind mode.
2. Connect an oscilloscope to the test points as follows.
3. Adjust RV801 and RV802.

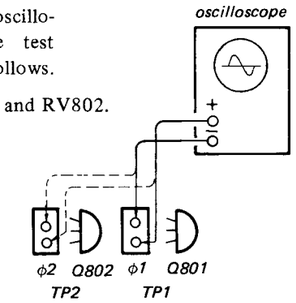

Specification:

Oscilloscope Connection	Adjust	Waveform
TP1 (φ1)	RV801	A = B (both within ±10 %)
TP2 (φ2)	RV802	

Adjustment Location:

– system control board –

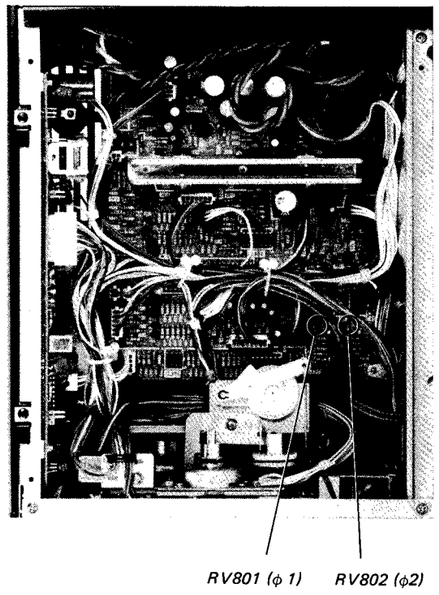

4. Capstan Motor Adjustment

Setting:

POWER switch: ON

Mode: stop

Procedure:

1. Set S601 to DC side (full-counterclockwise position).
2. Connect an oscilloscope to the test points as follows.

Connection

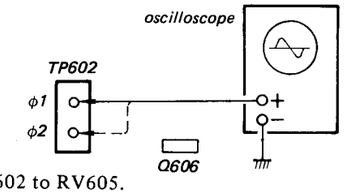

3. Adjust RV602 to RV605.

GAIN

Oscilloscope Connection	Adjust	Waveform
TP602 (φ1)	RV602	A = 3.6 – 4.4 V p-p
TP602 (φ2)	RV604	

OFFSET

Oscilloscope Connection	Adjust	Waveform
TP601 (φ 1)	RV603	0 V
TP601 (φ 2)	RV605	

4. Set S601 to SERVO side (full-clockwise position).
5. Connect an oscilloscope to the test points as follows.

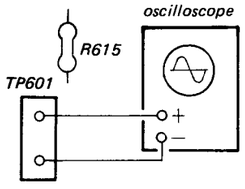

6. Adjust RV601 to obtain square waveforms as shown below.

Specification:

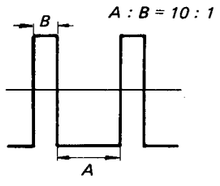

5. Reel Motor Adjustment

Procedure:

1. Set the unit in playback mode with a tape cassette installed.
2. Adjust RV702 so that the output frequency of TP701 is between 48 and 52 Hz.
3. Remove the cassette and adjust RV703 so that output frequency of TP701 in rewind mode is the same as that in fast forward mode.
4. Adjust RV701 so that output frequency of TP701 is 168–172 Hz.

Connection:

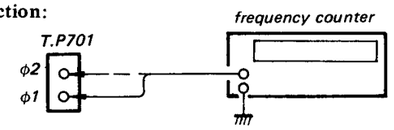

Adjustment Location:

– servo amp board –

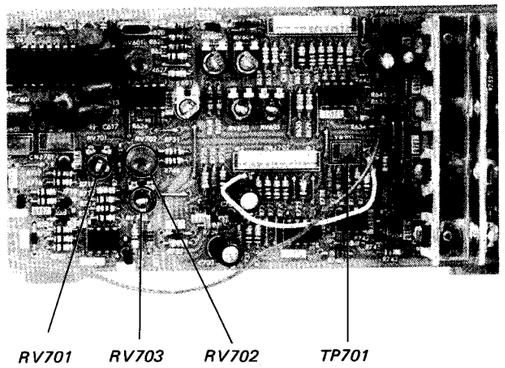

Adjustment Location:

– servo amp board –

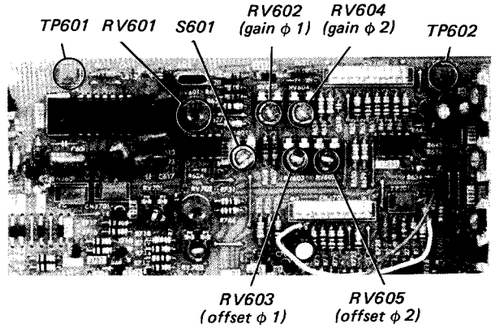

6. Playback Offset Adjustment

Procedure:

Adjust RV101 (L-CH), RV301 (R-CH) so that output level at test points, R120 (L-CH), R320 (R-CH) is 0 V ± 100 mV.

Connection:

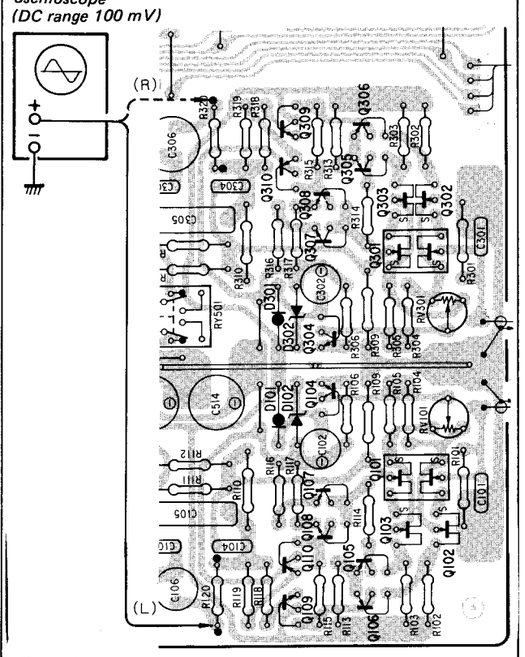

Specification:

0 V ± 100 mV

Adjustment Location:

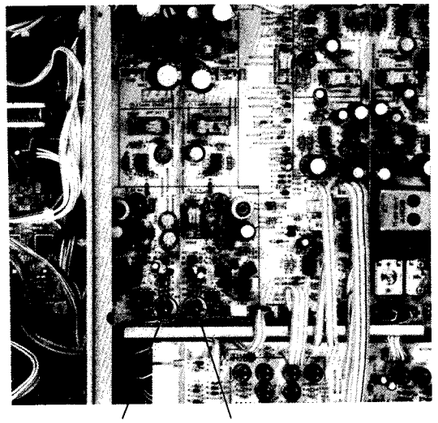

7. Playback Level Adjustment

Setting:

TAPE SELECT switch: TYPE 1

Mode: playback

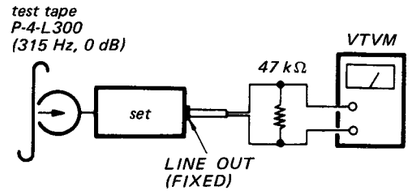

Adjust RV102 (L-CH) and RV302 (R-CH) to obtain the specified LINE OUT level.

Specification:

LINE OUT level : 0.41 to 0.46 V
(–4.5 to –5.5 dB)

Level difference between channels: less than 0.5 dB.

Check that the LINE OUT level does not change in playback mode while changing the mode from playback to stop several times.

Adjustment Location:

– record/playback board –

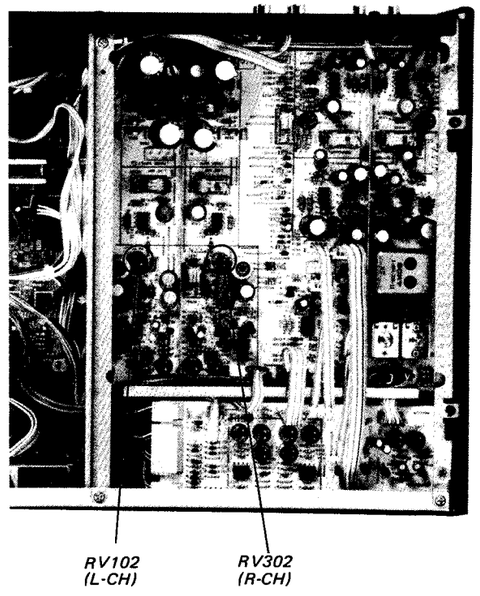

8. Record Level Adjustment

Setting:

REC LEVEL control: standard record (See page 21.)

Procedure:

1. Mode: record

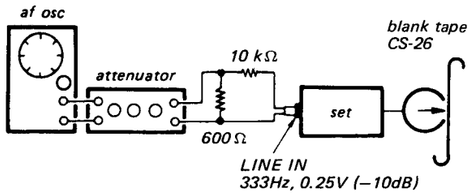

2. Mode: playback

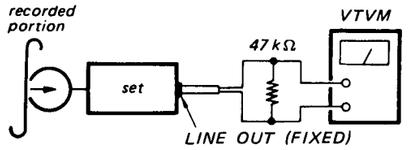

Adjust RV105 (L-CH) and RV305 (R-CH) to obtain 0.44V (−5dB) LINE OUT level.

Specification:

LINE OUT level: 0.36 – 0.51 V (−6.5 to 3.5 dB)

Adjustment Location: *– record/playback board –*

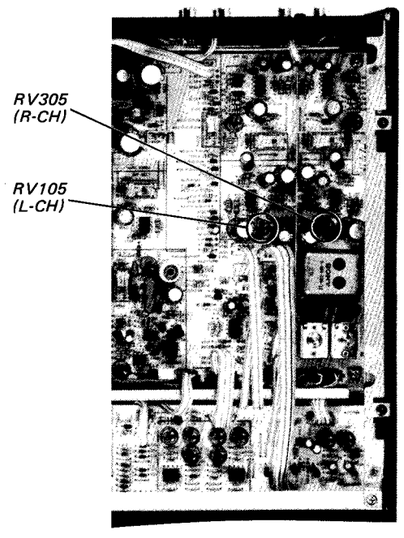

9. Record Bias Adjustment

Setting:

REC LEVEL control: standard record (See page 21.)

Procedure:

1. Mode: record

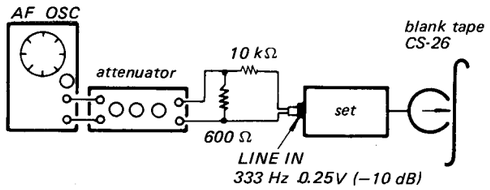

2. Mode: playback

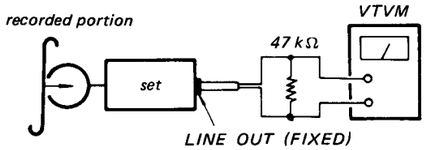

Adjust CT101 (L), CT301 (R) to obtain the same playback level at 333 Hz and 10 kHz.

3. Repeat steps 1 and 2. Be sure to finish adjusting CT101, CT301 by turning them clockwise.

Adjustment Location:
– record/playback board –

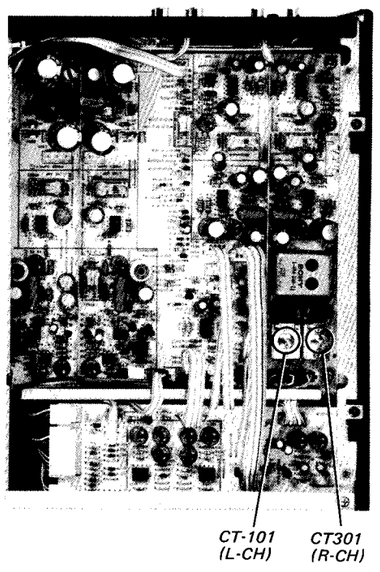

10. Record-Bias Trap and Bias Osc Frequency Adjustments

Setting:

TAPE switch: TYPE IV
MONITOR switch: TAPE

Procedure:

1. Mode: record (with no signal)

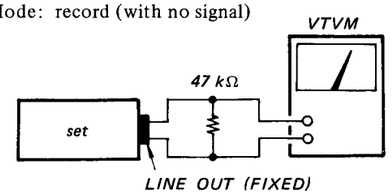

2. Adjust L101 (L-CH) and L301 (R-CH) so that LINE OUT level is less than 3.4 mV (−47 dB).
3. Next, connect the frequency counter with a trimmer capacitor (CT101 or CT301) and adjust bias osc frequency by turning red core of bias osc unit so that the reading is 103–107 kHz.

Note: Never turn brown core.

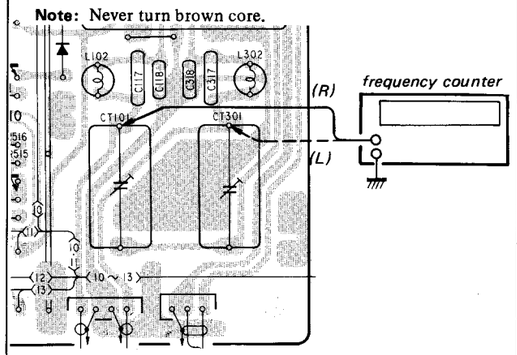

Adjustment Location:
– record/playback board –

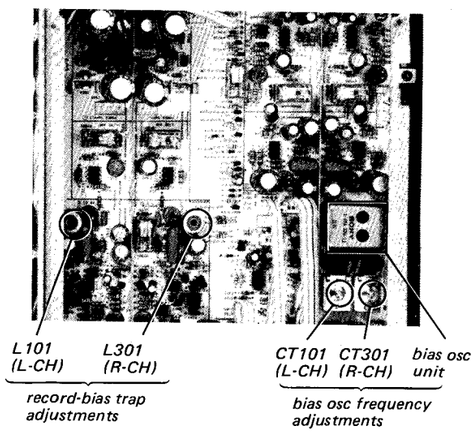

11. Meter Calibration

Setting:

PEAK HOLD reset switch: MANUAL
REC LEVEL control: Standard record (See page 21.)

Procedure:

1. Mode: record

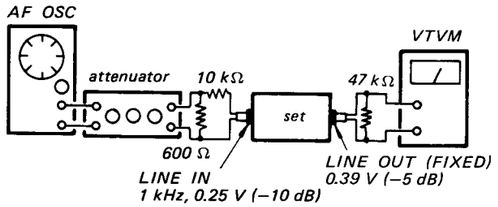

2. Set RV108, 308 to MIN and adjust RV109, 309 so that Low segment lights up dimly as shown in Fig. 1.
3. Low segment should go out when the input level is set to −10.3 dB.
4. Adjust RV108, 308 so that LOW segment lights up dimly when the input level is −10.3 dB.
5. LOW segment should light up completely when the input level is set to −10 dB.
6. Adjust the input level so that LINE OUT level is +9 dB.
7. Lower the input to 0.3 dB so that LINE OUT output is +8.7 dB. While pushing PEAK HOLD MANUAL switch, adjust RV110, 310 so that the segment lights up dimly as in Fig. 2.
8. Adjust the input level so that LINE OUT output is +9 dB. At this time, the segment in Fig. 2 should light up completely.

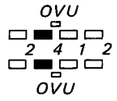

Fig. 1

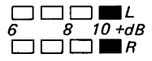

Fig. 2

Adjustment Location:
– REC CAL board –

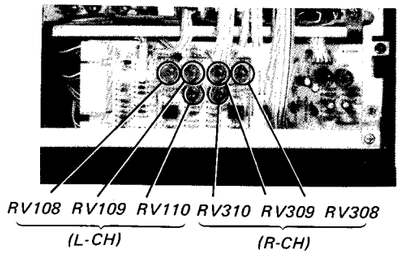

4-2. MOUNTING DIAGRAM
– Audio Amp Section –
– Conductor Side –

- See page 56 for the Semiconductor Lead Layouts.

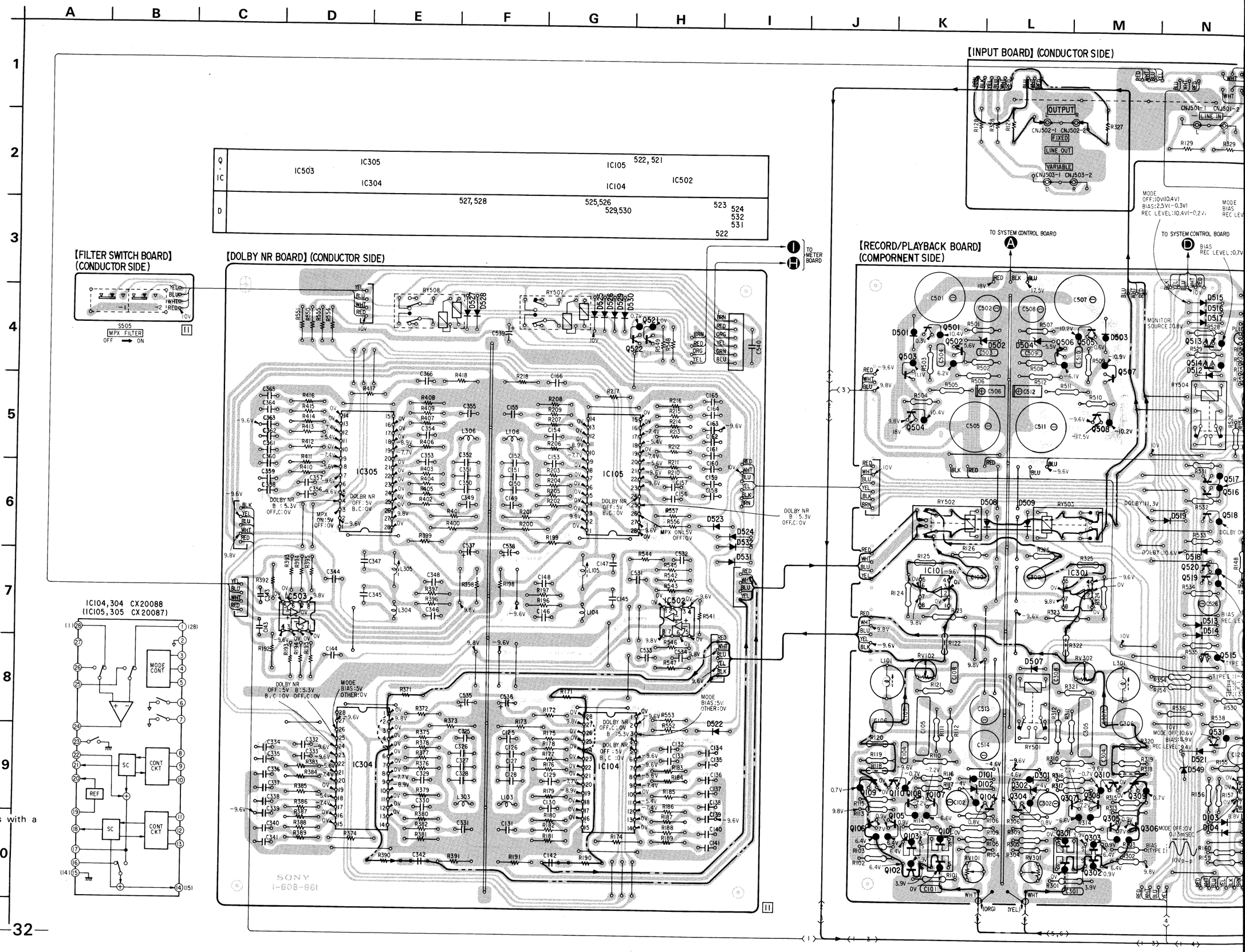

Note:

- Color code of sleeving over the end of the jacket.

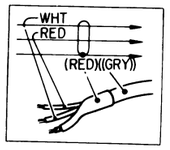

- ○— : parts extracted from the component side.
- [ ]— : indicates side identified with part number.
- Ⓕ : fusible resistor.
- : B + pattern
- ▬▶▬ : signal path
- ▬▶▬ : L-CH signal path
- ▬▶▬ : R-CH signal path
- Readings are taken under no-signal conditions with a VOM (50 kΩ/V).
  no mark: PLAYBACK
  ( ): RECORD

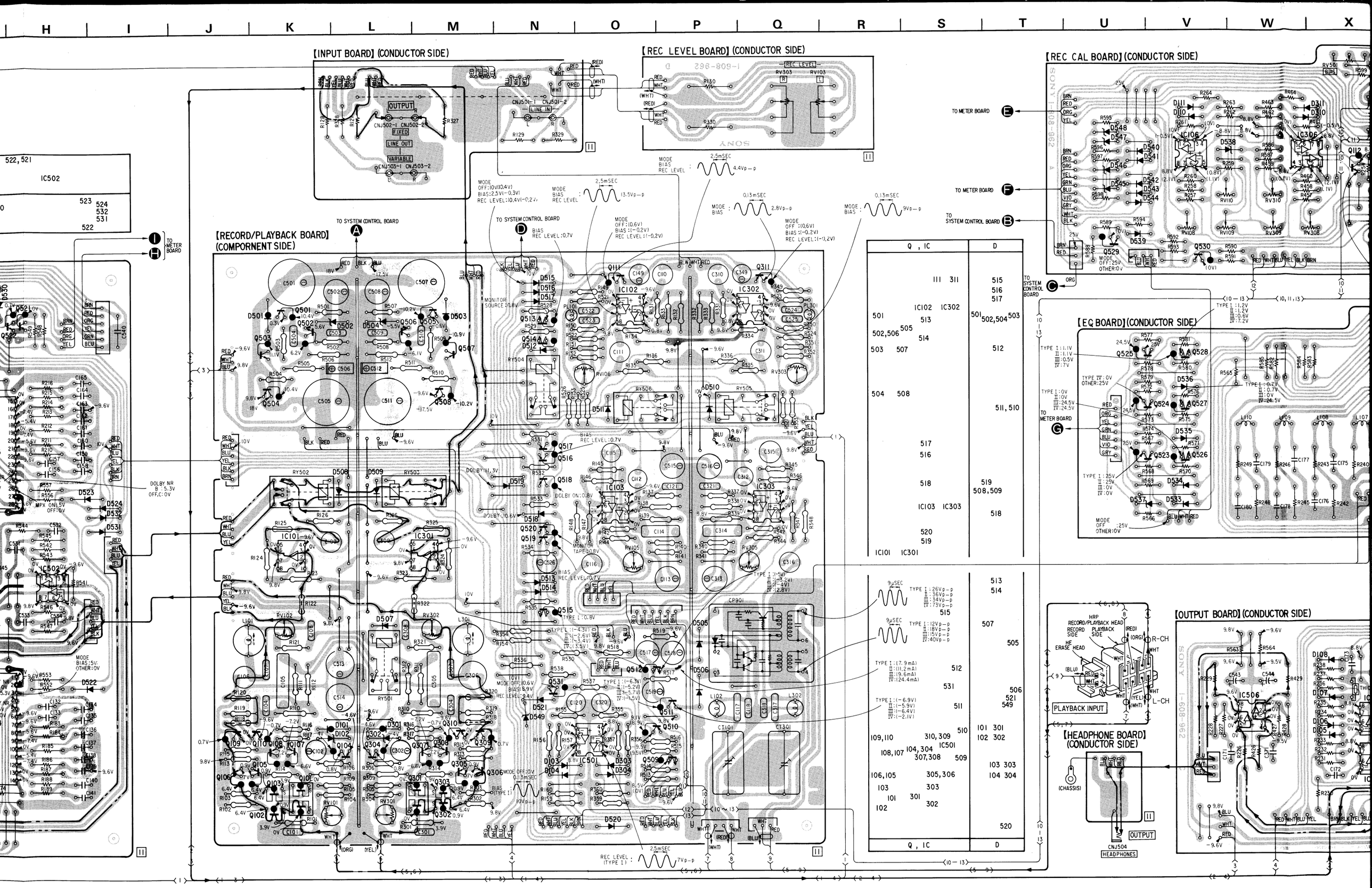
【INPUT BOARD】(CONDUCTOR SIDE)
【REC LEVEL BOARD】(CONDUCTOR SIDE)
【REC CAL BOARD】(CONDUCTOR SIDE)
【RECORD/PLAYBACK BOARD】(COMPORNENT SIDE)
【EQ BOARD】(CONDUCTOR SIDE)
【OUTPUT BOARD】(CONDUCTOR SIDE)
【HEADPHONE BOARD】(CONDUCTOR SIDE)
TO METER BOARD
TO SYSTEM CONTROL BOARD
DOLBY NR B : 5.3V OFF,C: 0V
MPX ON:5V OFF:0V
MODE BIAS:5V OTHER:0V
PLAYBACK INPUT
CNJ504 HEADPHONES
OUTPUT
Q , IC
D

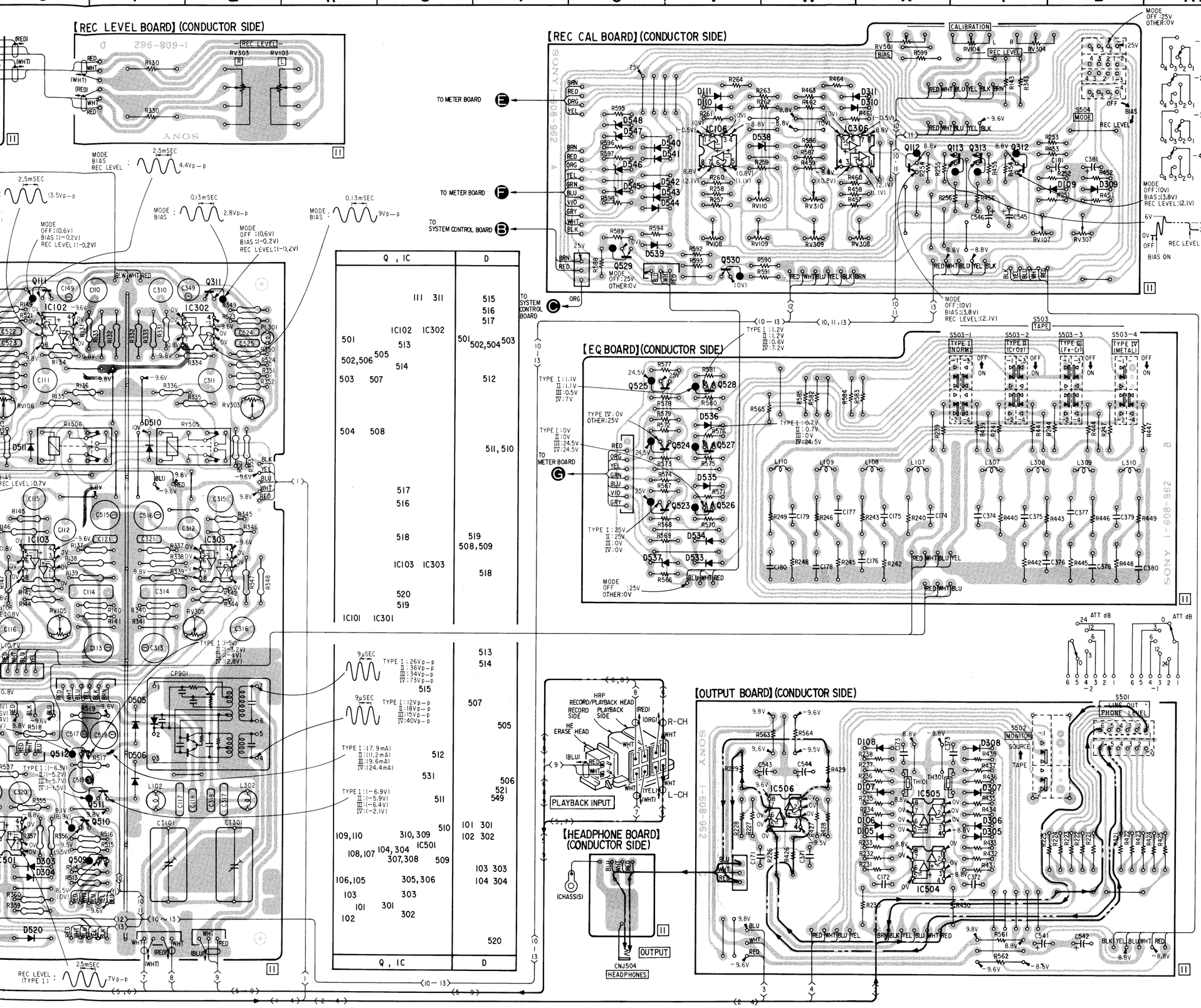

Q , IC	D
	111 311
	110 310
	548
	547
1C106, IC306	540,538
112,113,313,312	541
	546
	542
	545 109 309
	543
	544
529	539
530	
525 528	
	536
524 527	
	535
523 526	
	534
	537 533
	108 308
	107 307
IC506 IC505	106 306
	105 305
IC504	
Q , IC	D

12. REC LEVEL CAL Adjustment

Setting:

CALIBRATION MODE switch: REC LEVEL

Procedure:

1. Adjust RV106 so that the level at the check point (R142), is 77 mV (−20 dB).

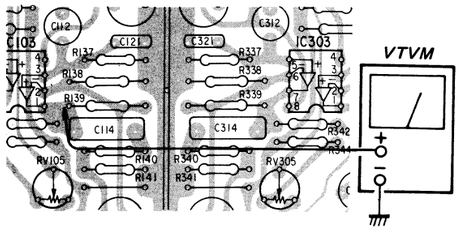

2. Install blank tape (CS-26) and set the unit to RECORD MONITORING mode by changing the MONITOR switch to TAPE position.
   Adjust RV107 (L-CH), 307 (R-CH) so that the segment over 0 dB indication goes out.

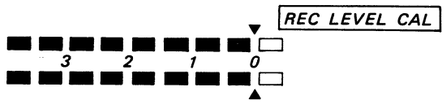

3. Be sure that indication of meter varies as follows when turning REC LEVEL CAL control from mechanical center to MIN or MAX.
   The right segment should be lit up in the following range.
   MINIMUM : A range
   MAXIMUM: B range

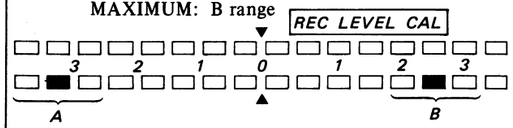

Adjustment Location:

– record/playback board, REC CAL board –

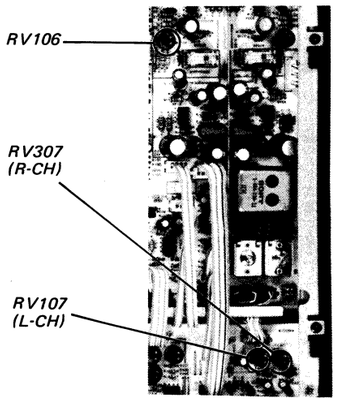

13. Bias Cal Adjustment

Setting:

CALIBRATION MODE switch: BIAS

Procedure:

1. MONITOR switch: TAPE
2. Install the blank tape (CS-26) and adjust RV306 so that the HIGH FREQ element one above the maximum LOW FREQ element lights up completely. (The next one up may blink).

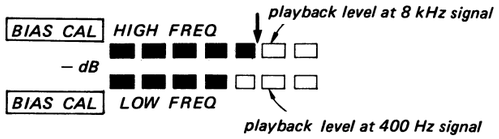

3. Make sure that elements of HIGH FREQUENCY (upper side) vary when turning BIAS CAL control from the mechanical center to MIN and to MAX.
   Relative to level at BIAS CAL control center.
   MIN : +9 element
   MAX: −9 element

Adjustment Location:

– record/playback board –

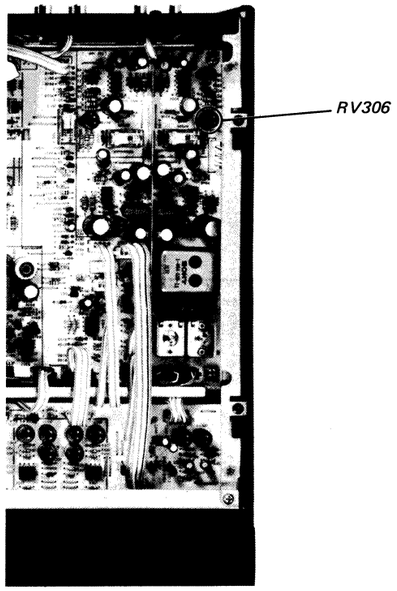

14. MPX Filter Adjustment

1. Mode: record
   MPX filter switch: ON
2. Feed a signal of 333 Hz, 0.25 V (−10 dB) into the LINE IN jack.
3. Adjust the REC LEVEL control for −5 dB (0.44 V) on the VTVM.
4. Feed a signal of 19 kHz, 0.25 V (−10 dB) into the LINE IN jack.
5. Adjust L105 (L-CH) and L305 (R-CH) for minimum reading on VTVM.

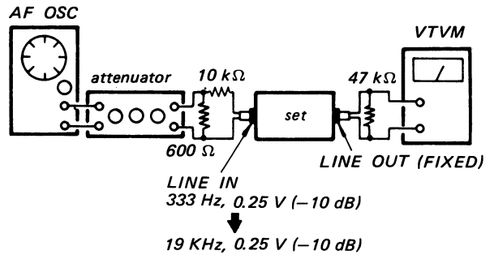

Specification:

Less than 14 mV (−35 dB)

Adjustment Locations:

– record/playback board –

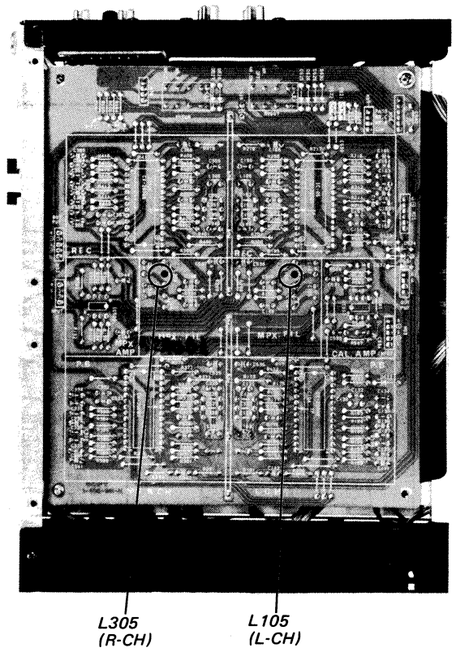

14. MPX Filter Adjustment

1. Mode: record
   MPX filter switch: ON
2. Feed a signal of 333 Hz, 0.25 V (−10 dB) into the LINE IN jack.
3. Adjust the REC LEVEL control for −5 dB (0.44 V) on the VTVM.
4. Feed a signal of 19 kHz, 0.25 V (−10 dB) into the LINE IN jack.
5. Adjust L105 (L-CH) and L305 (R-CH) for minimum reading on VTVM.

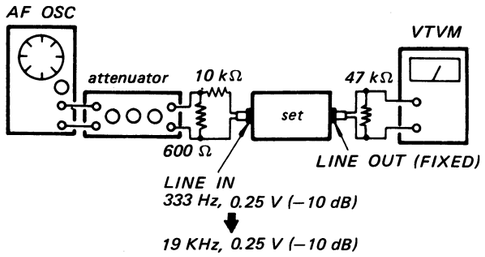

Specification:

Less than 14 mV (−35 dB)

Adjustment Locations:

– record/playback board –

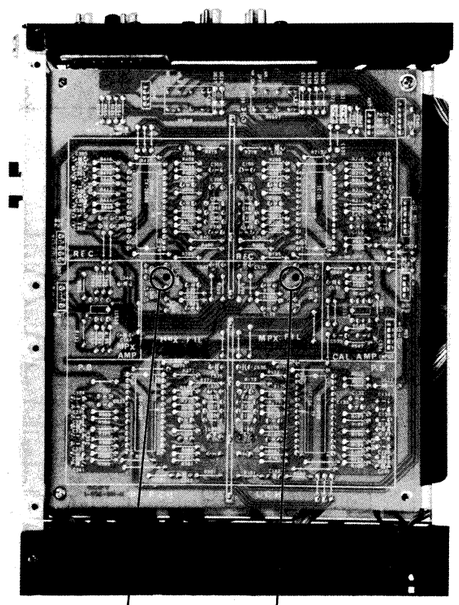

SECTION 4
DIAGRAMS

4-1. MOUNTING DIAGRAM
– Record/Playback Board –

– Conductor Side –

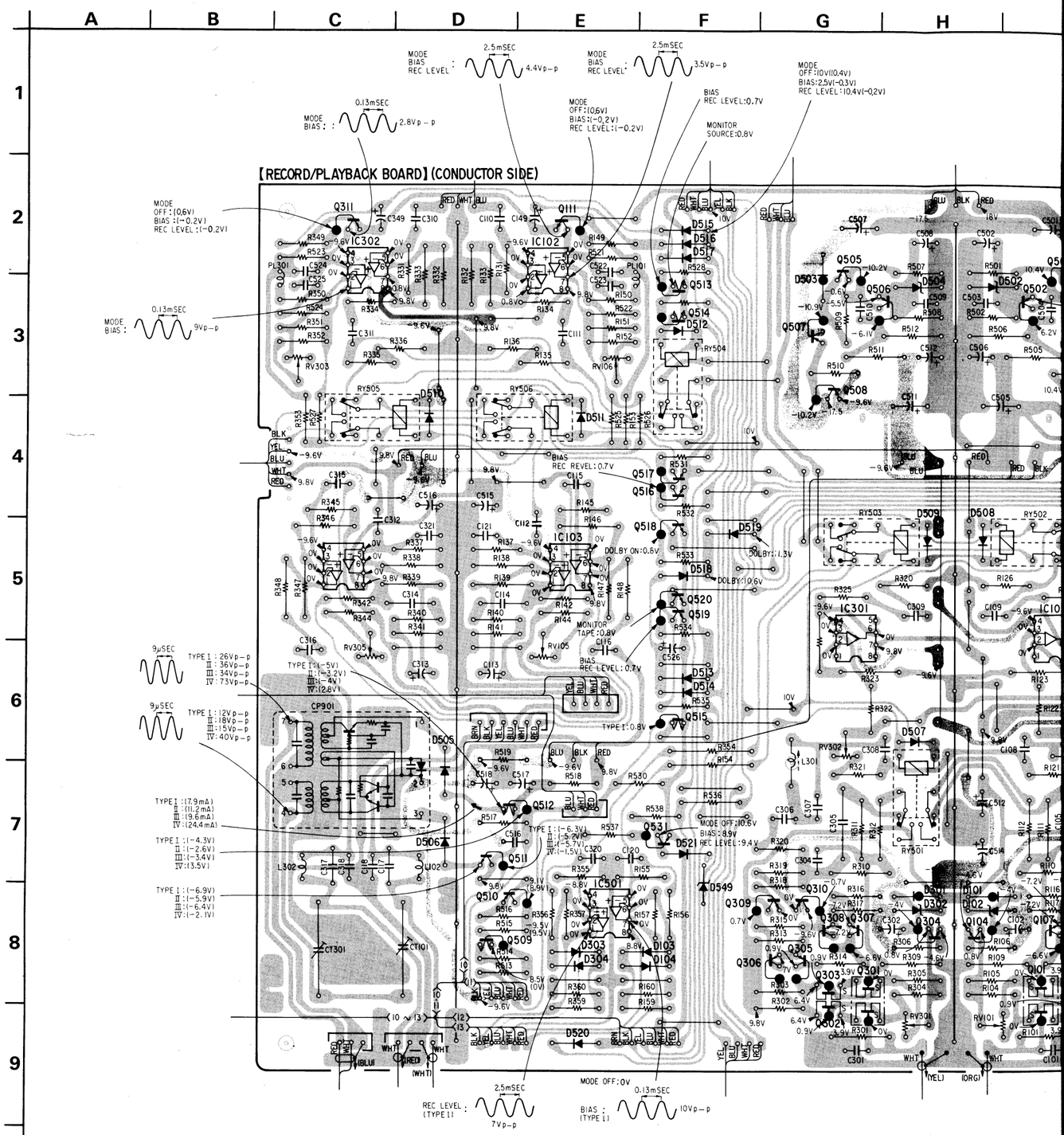

ING DIAGRAM
Playback Board —
ctor Side —

SECTION 4
DIAGRAMS

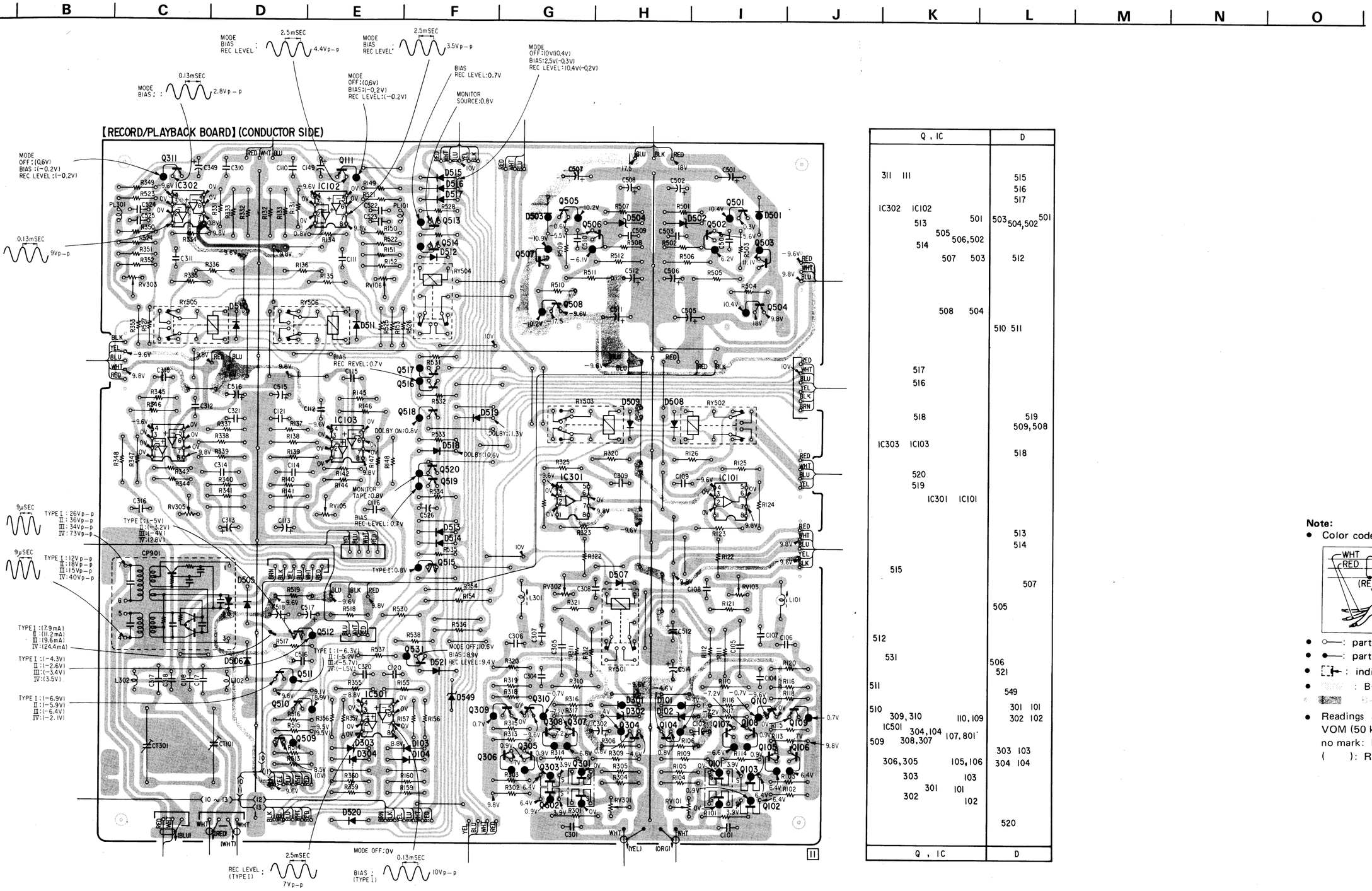

Q , IC	D
311 111	515
	516
	517
IC302 IC102	
513 501	503 504,502 501
505 506,502	
514	
507 503	512
508 504	
	510 511
517	
516	
518	519
	509,508
IC303 IC103	518
520	
519	
IC301 IC101	
	513
	514
515	
	507
	505
512	
531	506
	521
511	549
510	301 101
309,310 110,109	302 102
IC501 304,104 107,801	
509 308,307	
	303 103
306,305 105,106	304 104
303 103	
301 101	
302 102	
	520
Q , IC	D

Note:

- Color code of sleeving over the end of the jacket.

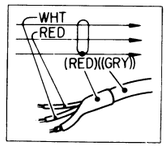

- ○—: parts extracted from the component side.
- ●—: parts extracted from the conductor side.
- ⊡—: indicates side identified with part number.
- : B+ pattern
- : B- pattern
- Readings are taken under no-signal conditions with a VOM (50 kΩ/V).
  no mark: PLAYBACK
  ( ): RECROD

4-4. SCHEMATIC DIAGRAM – System Control Section – ● Note: See page 52.

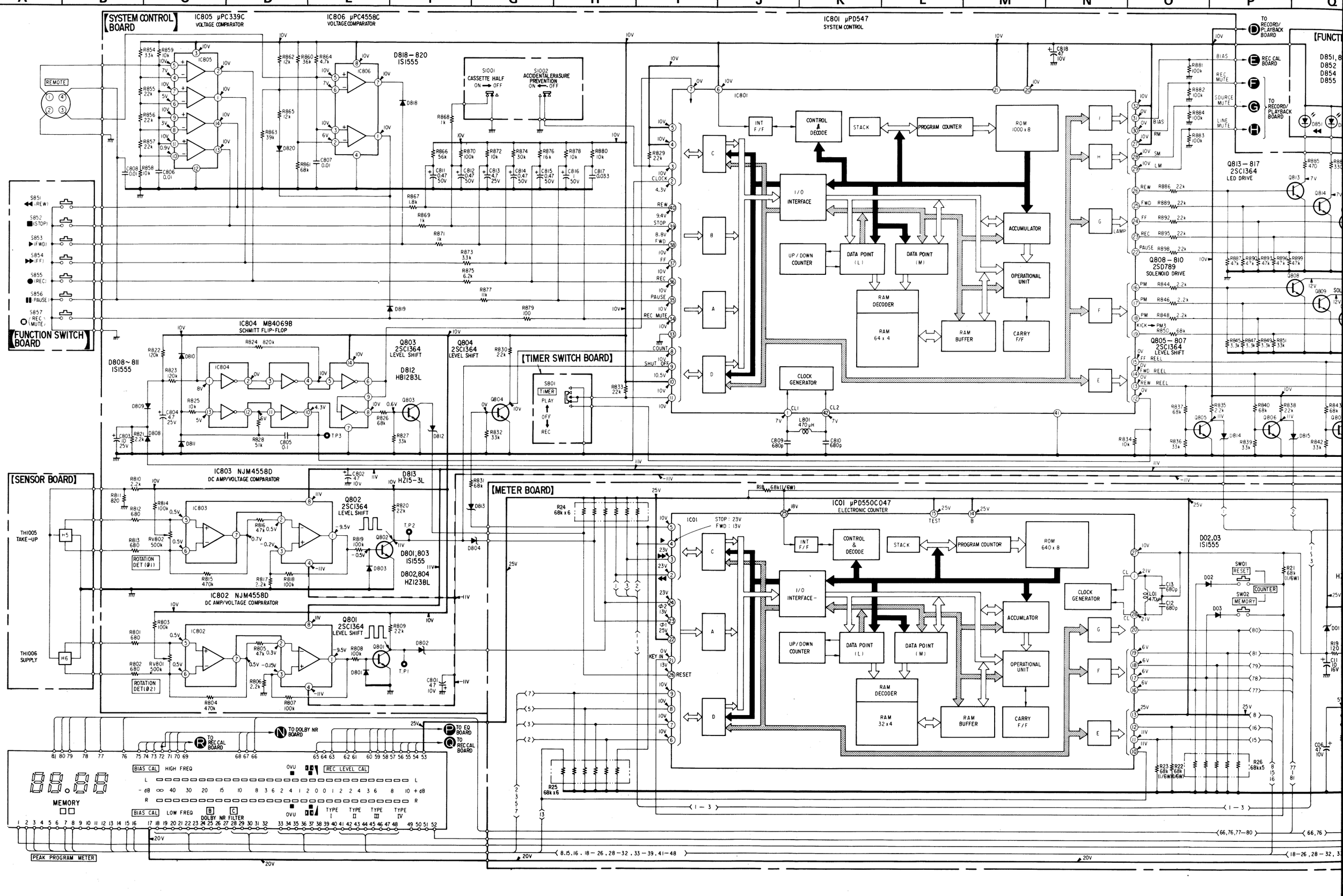

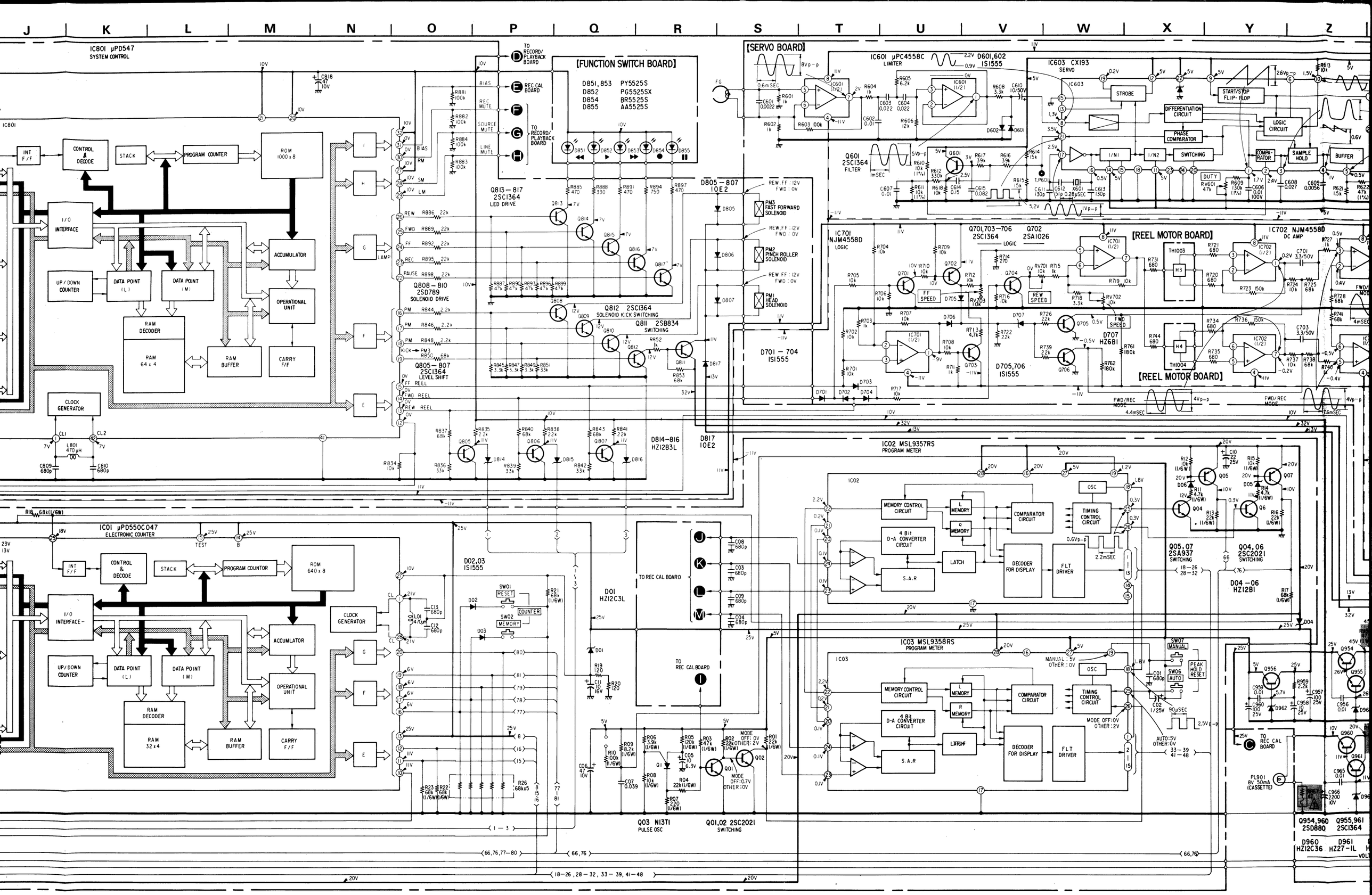
IC801 μPD547
SYSTEM CONTROL
INT F/F
CONTROL & DECODE
STACK
PROGRAM COUNTER
ROM 1000 x 8
I/O INTERFACE
ACCUMULATOR
UP/DOWN COUNTER
DATA POINT (L)
DATA POINT (M)
OPERATIONAL UNIT
RAM DECODER
RAM 64 x 4
RAM BUFFER
CARRY F/F
CLOCK GENERATOR
[FUNCTION SWITCH BOARD]
D851, 853 PY5525S
D852 PG5525SX
D854 BR5525S
D855 AA5525S
TO RECORD/PLAYBACK BOARD
REC CAL BOARD
Q813 – 817 2SC1364 LED DRIVE
Q808 – 810 2SD789 SOLENOID DRIVE
Q812 2SC1364 SOLENOID KICK SWITCHING
Q811 2SB834 SWITCHING
Q805 – 807 2SC1364 LEVEL SHIFT
D805 – 807 10E2
PM3 FAST FORWARD SOLENOID
PM2 PINCH ROLLER SOLENOID
PM1 HEAD SOLENOID
D701 – 704 1S1555
D814–816 HZ12B3L
D817 10E2
[SERVO BOARD]
IC601 μPC4558C LIMITER
D601,602 1S1555
IC603 CX193 SERVO
STROBE
START/STOP FLIP-FLOP
DIFFERENTIATION CIRCUIT
PHASE COMPARATOR
LOGIC CIRCUIT
SWITCHING
SAMPLE HOLD
BUFFER
Q601 2SC1364 FILTER
IC701 NJM4558D LOGIC
Q701,703–706 2SC1364 LOGIC
Q702 2SA1026
[REEL MOTOR BOARD]
IC702 NJM4558D DC AMP
D707 HZ6B1
D705,706 1S1555
IC02 MSL9357RS PROGRAM METER
MEMORY CONTROL CIRCUIT
L MEMORY
R MEMORY
COMPARATOR CIRCUIT
4 Bit D-A CONVERTER CIRCUIT
S.A.R
LATCH
DECODER FOR DISPLAY
FLT DRIVER
TIMING CONTROL CIRCUIT
OSC
Q05,07 2SA937 SWITCHING
Q04,06 2SC2021 SWITCHING
D04 – 06 HZ12B1
IC03 MSL9358RS PROGRAM METER
SW07 MANUAL
SW06 AUTO
PEAK HOLD RESET
TO REC CAL BOARD
PL901 8V 50mA (CASSETTE)
Q954,960 2SD880
Q955,961 2SC1364
D960 HZ12C36
D961 HZ27-IL
IC801
IC01 μPD550C047
ELECTRONIC COUNTER
D02,03 1S1555
D01 HZ12C3L
SW01 RESET
SW02 MEMORY
COUNTER
Q03 N13T1 PULSE OSC
Q01,02 2SC2021 SWITCHING

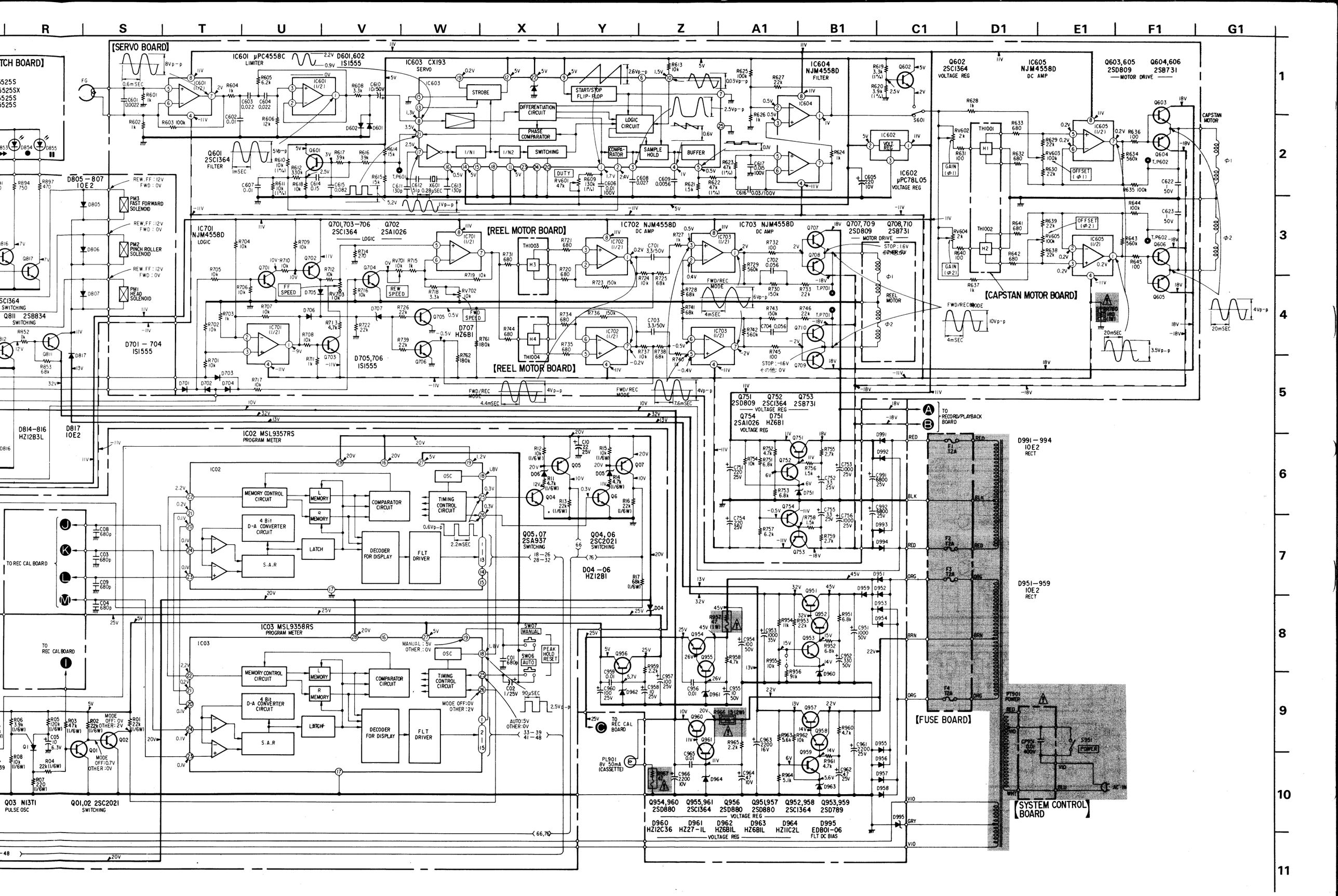
[SERVO BOARD]
IC601 μPC4558C LIMITER
D601,602 1S1555
IC603 CX193 SERVO
STROBE
DIFFERENTIATION CIRCUIT
PHASE COMPARATOR
START/STOP FLIP-FLOP
LOGIC CIRCUIT
I/N1
I/N2
SWITCHING
COMPARATOR
SAMPLE HOLD
BUFFER
DUTY
IC604 NJM4558D FILTER
Q601 2SC1364 FILTER
IC602 μPC78L05 VOLTAGE REG
VOLT REG
Q602 2SC1364 VOLTAGE REG
IC605 NJM4558D DC AMP
Q603,605 2SD809
Q604,606 2SB731
MOTOR DRIVE
CAPSTAN MOTOR
[CAPSTAN MOTOR BOARD]
OFFSET
GAIN
D805 – 807 10E2
PM3 FAST FORWARD SOLENOID
PM2 PINCH ROLLER SOLENOID
PM1 HEAD SOLENOID
REW:FF:12V FWD:0V
Q811 2SB834 SWITCHING
D814–816 HZ12B3L
D817 10E2
IC701 NJM4558D LOGIC
Q701,703–706 2SC1364 LOGIC
Q702 2SA1026
FF SPEED
REW SPEED
FWD SPEED
D701 – 704 1S1555
D705,706 1S1555
D707 HZ6B1
[REEL MOTOR BOARD]
IC702 NJM4558D DC AMP
IC703 NJM4558D DC AMP
Q707,709 2SD809
Q708,710 2SB731
MOTOR DRIVE
STOP:1.6V OTHER:0V
REEL MOTOR
FWD/REC MODE
Q751 2SD809
Q752 2SC1364
Q753 2SB731
VOLTAGE REG
Q754 2SA1026
D751 HZ6B1
VOLTAGE REG
TO RECORD/PLAYBACK BOARD
D991–994 10E2 RECT
D951–959 10E2 RECT
[FUSE BOARD]
F1 T2A
F2 T2A
F3 T2A
F4 T2A
IC02 MSL9357RS PROGRAM METER
MEMORY CONTROL CIRCUIT
L MEMORY
R MEMORY
COMPARATOR CIRCUIT
TIMING CONTROL CIRCUIT
4 Bit D-A CONVERTER CIRCUIT
LATCH
S.A.R
DECODER FOR DISPLAY
FLT DRIVER
Q05,07 2SA937 SWITCHING
Q04,06 2SC2021 SWITCHING
D04 – 06 HZ12B1
IC03 MSL9358RS PROGRAM METER
SW07 MANUAL
SW06 AUTO
PEAK HOLD RESET
MODE OFF:0V OTHER:2V
AUTO:5V OTHER:0V
TO REC CAL BOARD
PL901 8V 50mA (CASSETTE)
Q954,960 2SD880
Q955,961 2SC1364
Q956 2SD880
Q951,957 2SD880
Q952,958 2SC1364
Q953,959 2SD789
VOLTAGE REG
D960 HZ12C36
D961 HZ27-IL
D962 HZ6B1L
D963 HZ6B1L
D964 HZ11C2L
D995 EDB01-06 FLT DC BIAS
[SYSTEM CONTROL BOARD]
PT901 POWER
S951 POWER
Q03 N13T1 PULSE OSC
Q01,02 2SC2021 SWITCHING
TO REC CAL BOARD

4-3. SCHEMATIC DIAGRAM — Audio Amp Section —

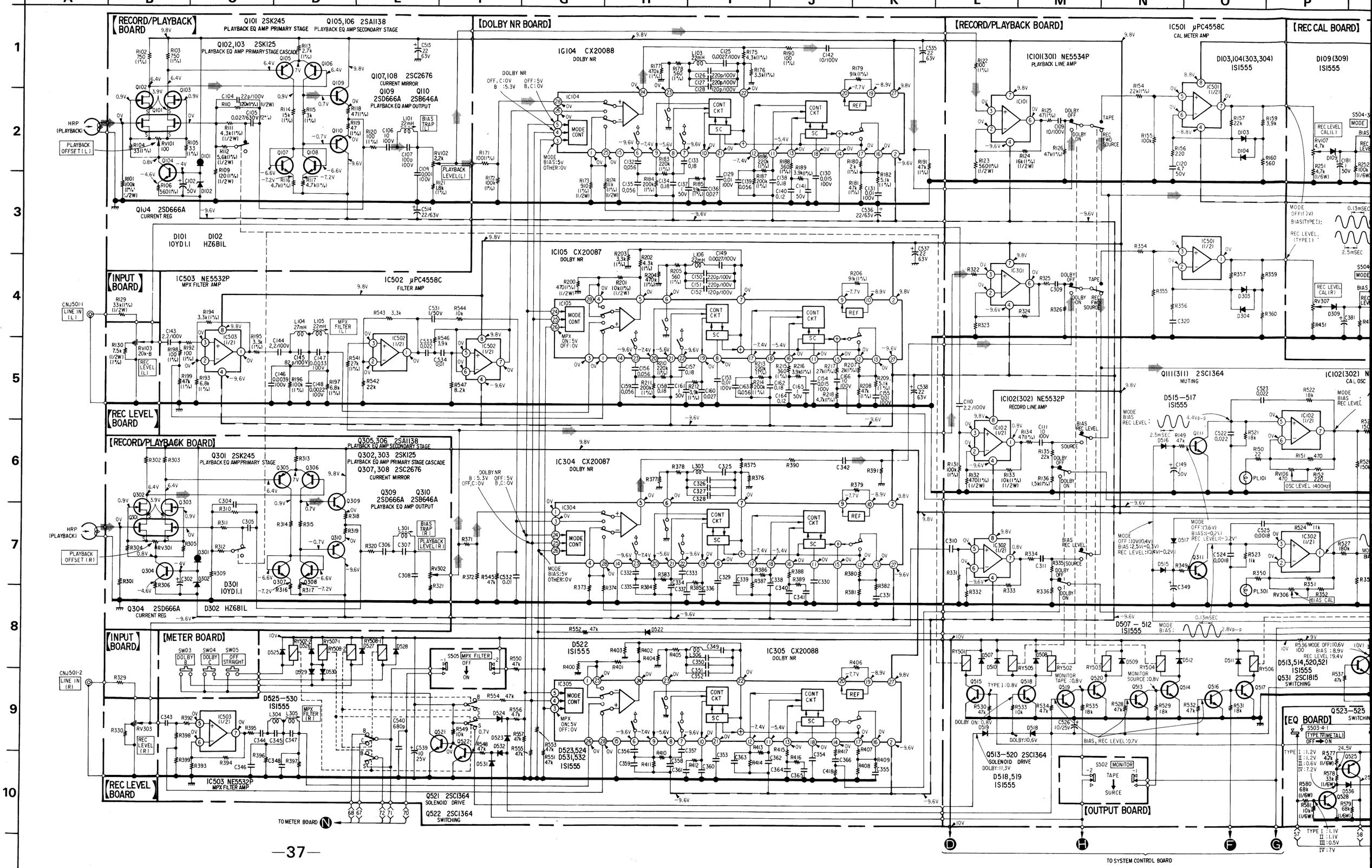

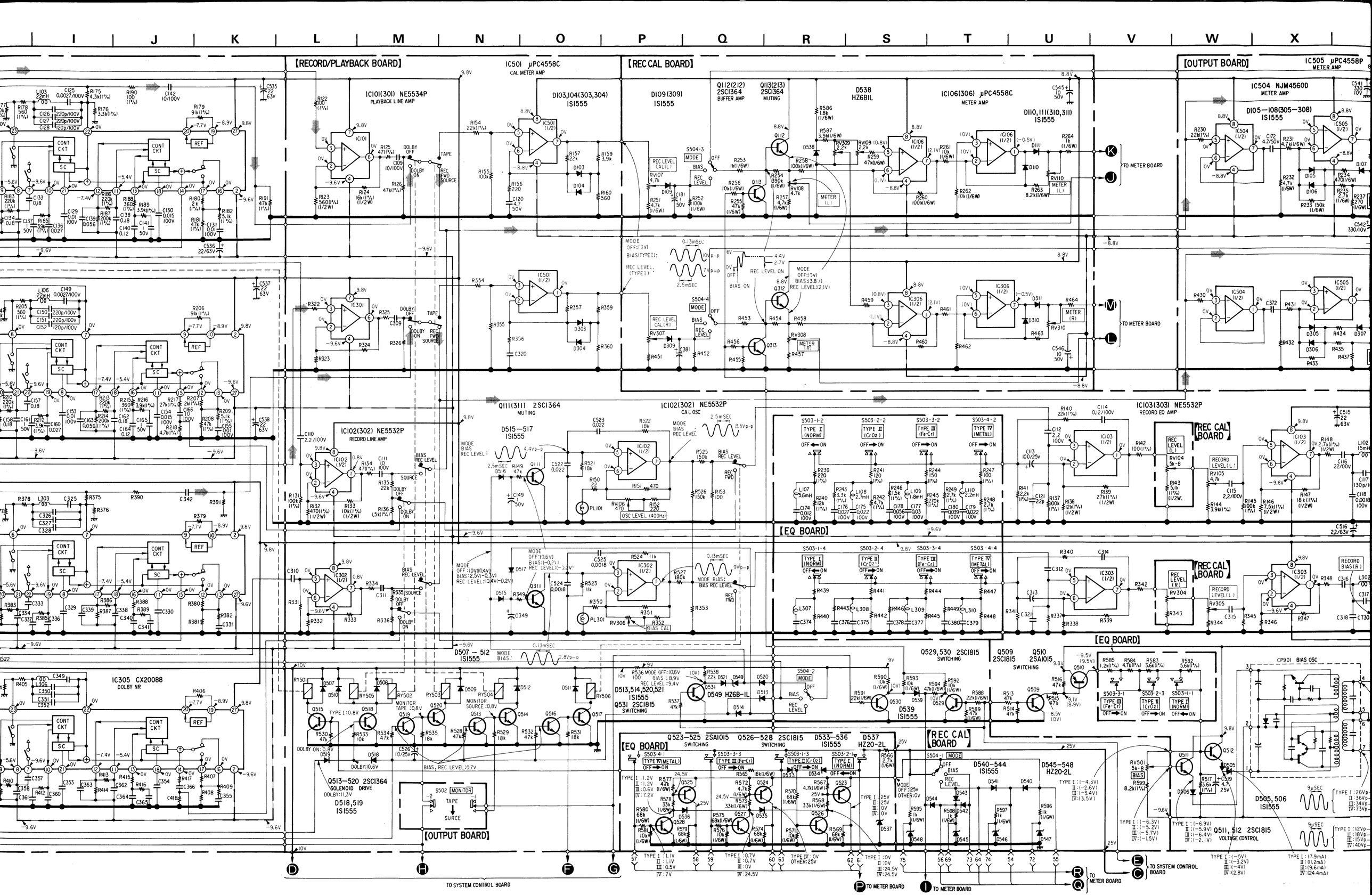
I J K L M N O P Q R S T U V W X
【RECORD/PLAYBACK BOARD】
IC101(301) NE5534P
PLAYBACK LINE AMP
IC501 μPC4558C
CAL METER AMP
D103,104(303,304)
1S1555
【REC CAL BOARD】
D109(309)
1S1555
Q112(212) 2SC1364
BUFFER AMP
Q113(213) 2SC1364
MUTING
D538
HZ6BIL
IC106(306) μPC4558C
METER AMP
D110,111(310,311)
1S1555
TO METER BOARD
【OUTPUT BOARD】
IC505 μPC4558P
METER AMP
IC504 NJM4560D
METER AMP
D105—108(305—308)
1S1555
IC302 NE5532P
RECORD LINE AMP
Q111(311) 2SC1364
MUTING
D515—517
1S1555
IC102(302) NE5532P
CAL OSC
IC103(303) NE5532P
RECORD EQ AMP
【EQ BOARD】
IC305 CX20088
DOLBY NR
D507—512
1S1555
D513,514,520,521
1S1555
Q531 2SC1815
SWITCHING
Q529,530 2SC1815
SWITCHING
Q509 2SC1815
Q510 2SA1015
SWITCHING
Q523—525 2SA1015
Q526—528 2SC1815
D533—536
1S1555
D537
HZ20-2L
SWITCHING
D540—544
1S1555
D545—548
HZ20-2L
Q513—520 2SC1364
SOLENOID DRIVE
D518,519
1S1555
【OUTPUT BOARD】
CP901 BIAS OSC
D505,506
1S1555
Q511,512 2SC1815
VOLTAGE CONTROL
TO SYSTEM CONTROL BOARD
TO METER BOARD
TO METER BOARD
TO METER BOARD
TO SYSTEM CONTROL BOARD
TO METER BOARD
TO METER BOARD

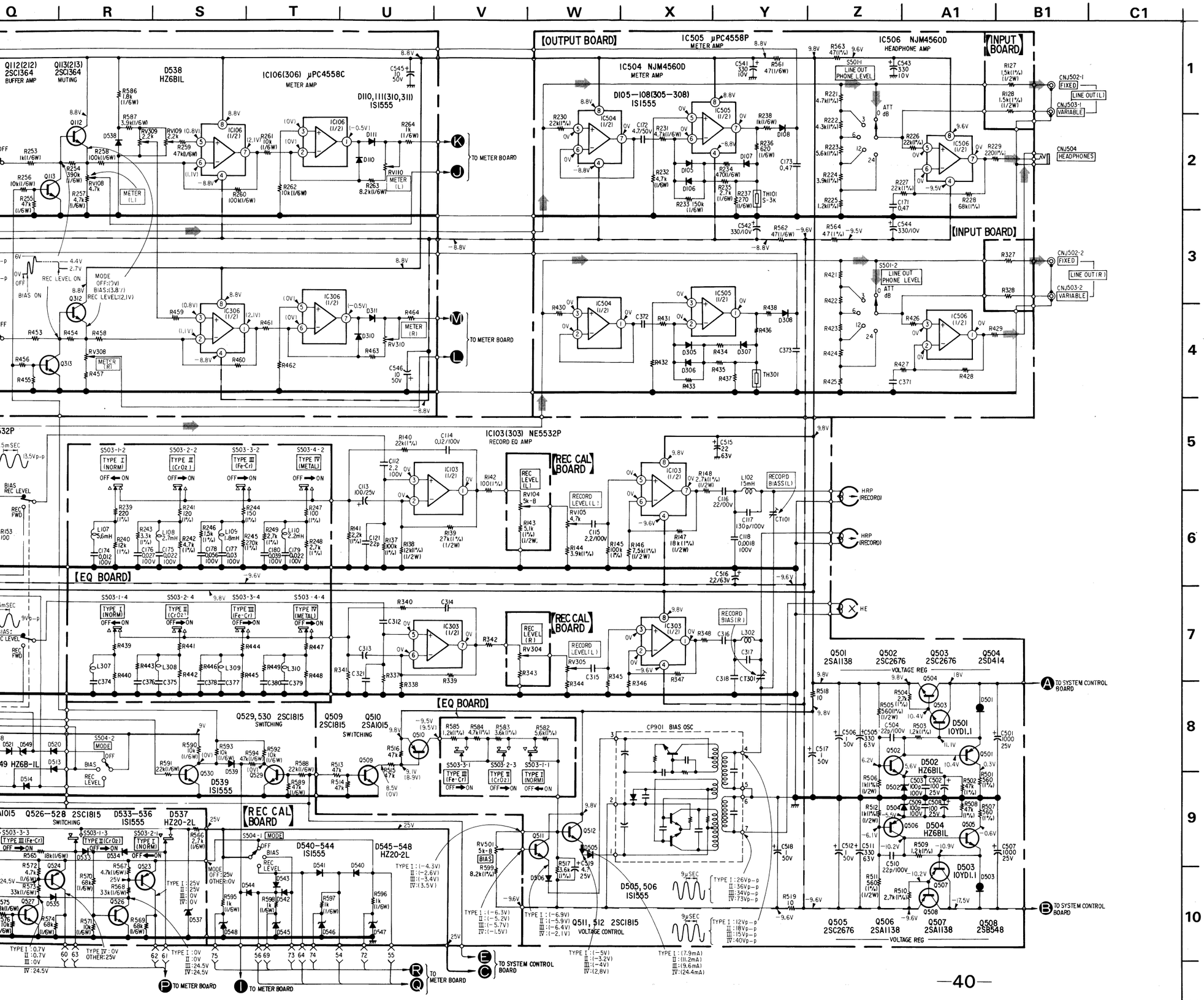

Note:

- Components for right channel have same values as for left channel. Reference numbers are coded from
- All capacitors are in μF unless otherwise noted. pF : μμF 50WV or less are not indicated except for electrolytics and tantalums.
- All resistors are in ohms, ¼W unless otherwise noted. kΩ : 1000Ω, MΩ : 1000kΩ
- : nonflammable resistor.
- : fusible resistor.
- △ : internal component.
- : **signal path**
- : panel designation.
- : adjustment for repair.
- ——: B+ bus.
- – – –: B- bus.
- Readings are taken under no-signal conditions with a VOM (50kΩ/V).
  no mark: PLAYBACK
  ( ): RECORD
- AC voltage readings in the bias oscillator with a VTVM.
- Switches

Ref. No.	Switch	Position
S501	LINE OUT PHONE LEVEL	0dB
S502	MONITOR	TAPE
S503	TAPE	TAPE 1 (FORM)
S504	MODE	OFF
S505	MPX FILTER	OFF

Note: Voltages are measured with a VOM (50kΩ/V).

4-5. MOUNTING DIAGRAM – System Control Section – • See page 56 for the Semiconductor Lead Layouts.

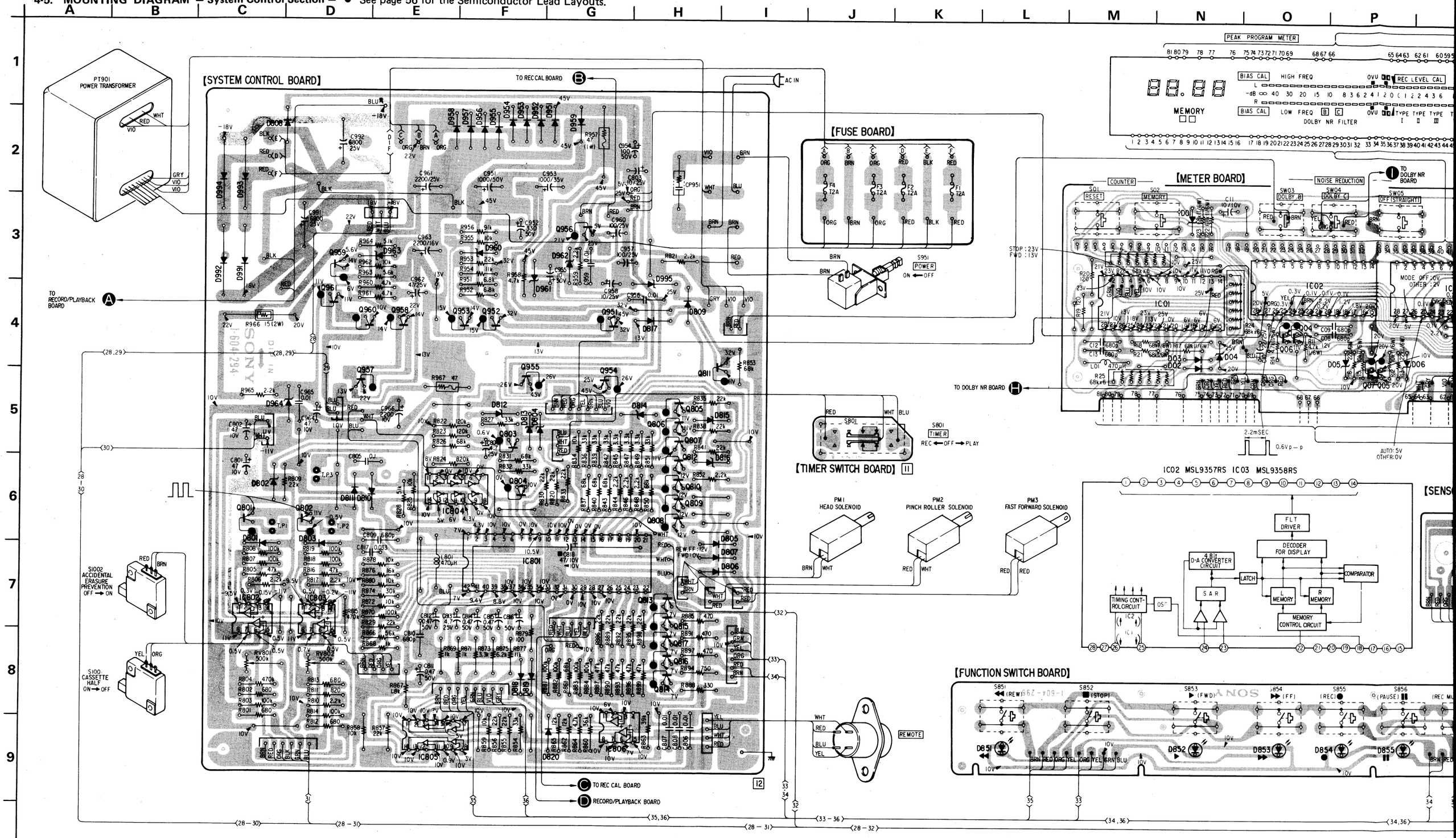

	A	B	C	D	E	F	G	H	I	J	K	L	M	N	O	P	
Q · IC			801 IC802	959 961 960 802 957 IC803	958 IC804 IC805	953 952 955 803 804	956 951 954 IC801 IC806	805 ~ 810 811 813 ~ 817 812						IC01	IC02 06,04	07,05	IC03
D			994 992 993 991 808 964 802 801	803 811 810	963	951 ~ 958 960 961 812 813,804 818,819	962 959 820	995 817 814 809 815 816	805 807 806			851		01 03 02 852 04	853	05 854 06 855	

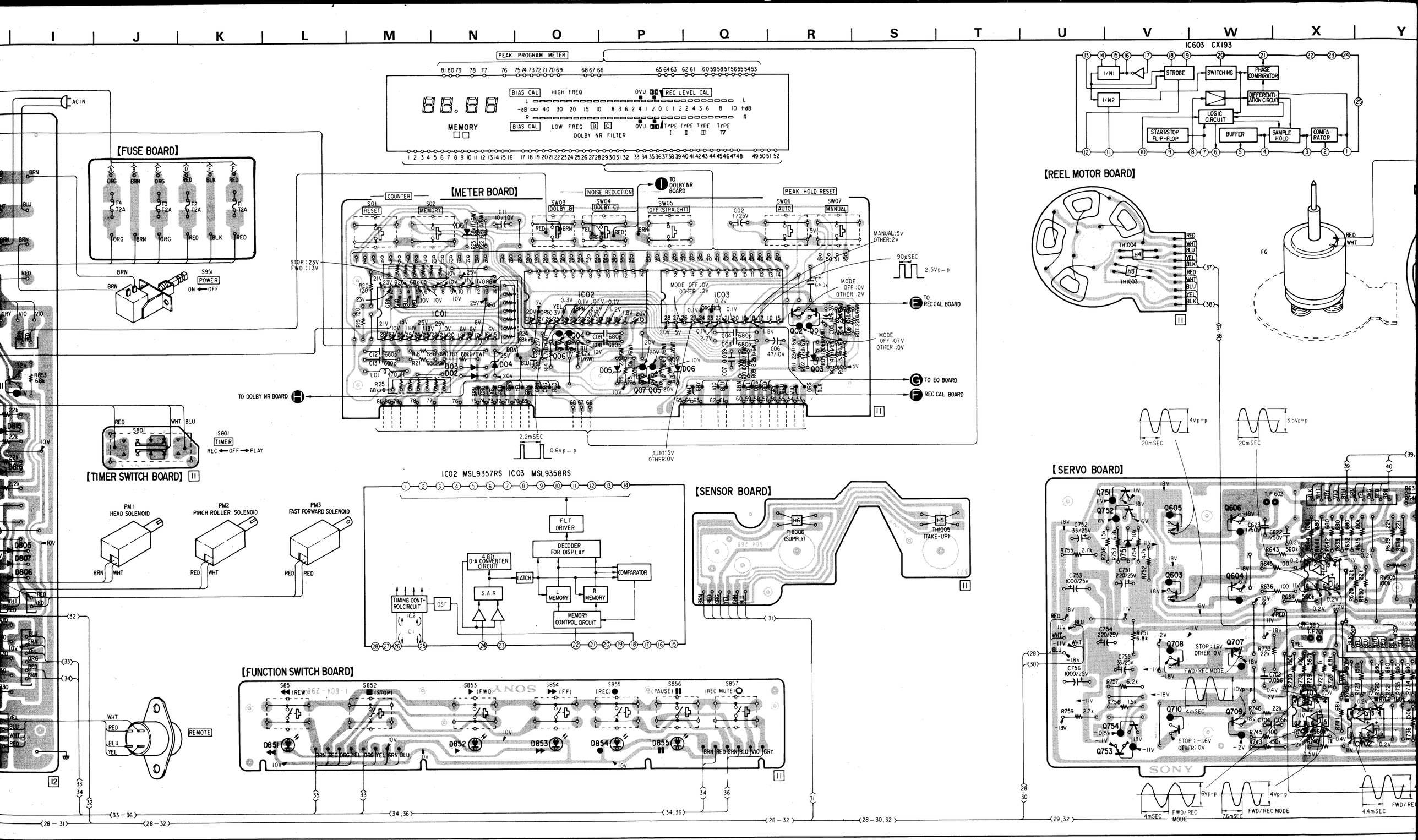

811

IC01

IC02
06,04
07,05

IC03

02 01
03

751
752
754
753

605
603
708
710

606
604
707
709

IC605

IC703

IC702

815
816 805
807
806

851

01
03
02
852

04

853

05
854

06
855

751

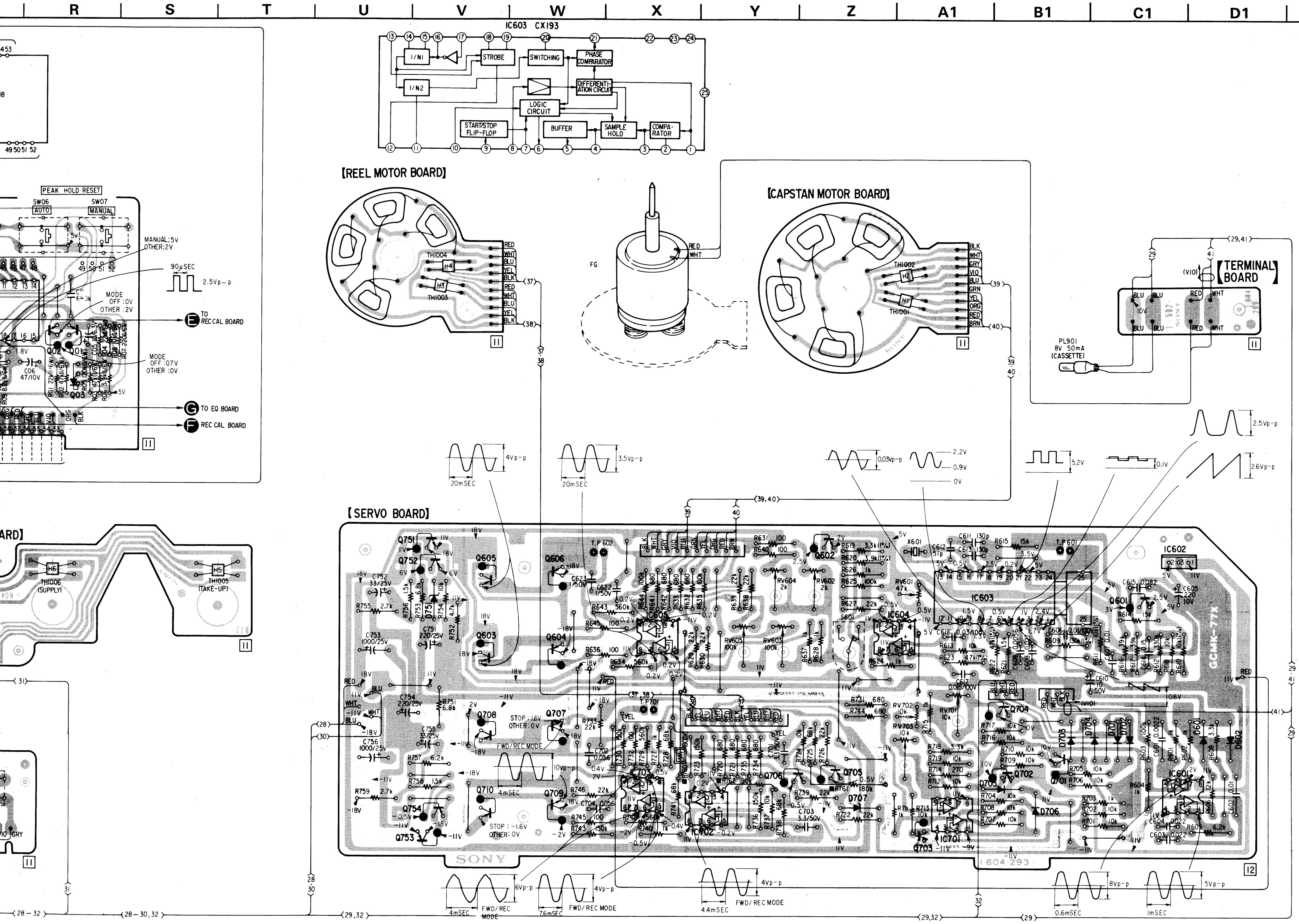

	R	S	T	U	V	W	X	Y	Z	A1	B1	C1	D1	
	02 01 03				751 752 754 753 605 603 708 710	606 604 707 709	IC605 IC703	IC702	602 706 705 IC604	IC701 703	IC603 704 702 701	601 IC602 IC601		Q · IC
					751				707		705 706 703	704 701,702	601 602	D

Note:

- Color code of sleeving over the end of the jacket.

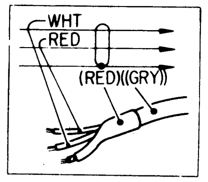

- ○—: parts extracted from the component side.
- [ ]⊢ : indicates side identified with part number.
- Ⓕ : fusible resistor.
- ▨ : B + pattern
- ━━➡━━ : signal path
- ━━■━━➡ : L-CH signal path
- ━━■■━━➡ : R-CH signal path
- Readings are taken under no-signal conditions with a VOM (50 kΩ/V).
  no mark: PLAYBACK
  (　　): RECORD

Note: (for System Control Boad Schematic Diagram)

- All capacitors are in μF unless otherwise noted. pF : μμF 50WV or less are not indicated except for electrolytics and tantalums.
- All resistors are in ohms, ¼W unless otherwise noted. kΩ : 1000Ω, MΩ : 1000kΩ
- : nonflammable resistor.
- : fusible resistor.
- △ : internal component.
- : panel designation.
- : adjustment for repair.
- ——: B+ bus.
- – – –: B– bus.
- Readings are taken under no-signal conditions with a VOM (50 kΩ/V).
  no mark: PLAYBACK
  ( ): RECORD
- AC voltage readings in the bias oscillator with a VTVM.
- Switches

Ref. No.	Switch	Position
SW01	RESET	OFF
SW02	MEMORY	OFF
SW03	DOLBY NR	OFF
SW04	DOLBY C	OFF
SW05	OFF (STRAIGHT)	OFF
SW06	AUTO	OFF
SW07	MANUAL	OFF
S801	TIMER	OFF
S851–857	Function	OFF
S951	POWER	OFF
S1001	Cassette Half	OFF
S1001	Accident Erasure Proof	OFF

Note: Voltages are measured with a VOM (50kΩ/V).

Note: The components identified by shading and mark ⚠ are critical for safety. Replace only with part number specified.

Voltages and Waveforms at the Terminals of IC801

Terminal No.	Waveform or Voltage
①	10 V; 2.6 μsec
②	10 V; 0 V; 4 msec
③–⑥	10 V; 0 V
⑦	10 Vp-p; 0.7 sec; when S951 (POWER) is turned on: 10 Vp-p; 1.3 sec; when S951 (POWER) is turned off:
⑧	10 V; 0 V
⑨	fast forward mode: 11 V; 0 V; 12 msec; forward mode: 11 V; 0 V; rewind mode: 11 V; 0 V; 5 msec
⑩	10 V; 0V
⑪	10 V; 0 V; when TIMER is turned off: 4 V; 0 V; TIMER switch: REC
⑫	4 V; 0 V; TIMER switch: REC
⑬	10 V; 0 V; rewind mode; 10 V; 0 V; just when mode is changed to stop from fast forward
⑭	10 V; 0 V; forward or record mode
⑮	10 V; 0 V; fast forward mode or just when mode is changed to stop from rewind
⑯	rewind and fast forward mode } DC 10 V
⑰, ⑱	forward and record mode } DC 10 V
⑲	rewind mode: DC 10 V; 10 V; 0 V; when forward/record button is turned on:
⑳, ㉑	DC 10 V
㉒	pause mode; 10 V; 0 V
㉓	record mode: DC 10 V
㉔	fast forward mode: DC 10 V
㉕	forward and record mode DC 10 V
㉖	rewind mode: DC 10 V
㉗, ㉘	DC 10 V
㉙	forward and record mode DC 10 V
㉚, ㉛	record mode: DC 10 V
㉜	DC 10 V
㉝	grounded
㉞	DC 10 V
㉟	10 V; 5 V; when PAUSE button is being pushed; 0 V
㊱	10 V; 3 V; 0 V; when REC button is pushed
㊲	10 V; 0 V; when fast forward button is being pushed
㊳	10 V; 0 V; when forward button is pushed
㊴	10 V; 0 V; when REC button is pushed
㊶	grounded
㊷	0.28 V; 2.6 μsec

Note: Voltage levels are measured by the oscilloscope which has 10 MΩ probe. They may be different from those indicated in the schematic or mounting diagrams which are measured by a VOM.

- **Semiconductor Lead Layouts**

CX193

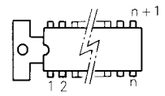

(Top view)

CX20087
CX20088
MSL9357RS
MSL9358RS
MB84069UB
NE5532P
NE5534P
NJM4560P
μPC339C
μPC4558C
μPD547C093
μPD550C047

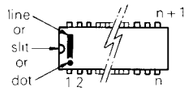

(Top view)

μPC78L05R

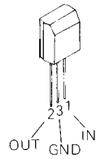

10E2
10YD1.3
30DF2
30DF2-FA
IS1555
EQB01-06
HZ6BIL
HZ6B2L
HZ12A-2L
HZ12B1L
HZ12C3L
HZ15-3L
HZ20-2L
HZ27-1L

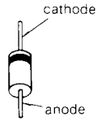

10YG1.1

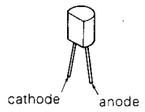

AA5525S
BR5525S
PG5525SX
PY5525S

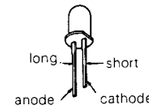

N13T1

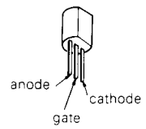

2SA733
2SA1015
2SB646A
2SB646C
2SC945
2SC1364
2SC1364-8
2SC1815
2SD666
2SD666R
2SD789

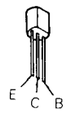

2SA937
2SC2021

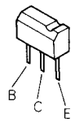

2SA1026-
2SA1026-
2SA1027

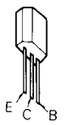

2SA1138
2SC2676
2SD774

2SB548
2SB731
2SD414
2SD809

letter side

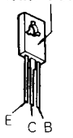

2SB834
2SD880

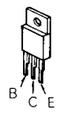

2SK125

2SK245

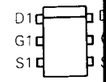

Voltage	Terminal No.	Waveform or Voltage
4 V 0 V REC	29	forward and record mode DC 10 V
10 V 0 V 10 V 0 V s changed to rward	30, 31	record mode: DC 10 V
	32	DC 10 V
	33	grounded
10 V 0 V mode	34	DC 10 V
10 V 0 V e or just nged nd	35	10 V 5 V when PAUSE button is being pushed 0 V
DC 10 V	36	10 V 3 V 0 V when REC button is pushed
C 10 V 10 V 0 V rd/record rned on:	37	10 V 0 V when fast forward button is being pushed
	38	10 V 0 V when forward button is pushed
10 V 0 V C 10 V : DC 10 V C 10 V C 10 V	39	10 V 0 V when REC button is pushed
	41	grounded
	42	0.28 V 2.6 μsec

Voltage levels are measured by the oscilloscope which has 10 MΩ probe. They may be different from those indicated in the schematic or mounting diagrams which are measured by a VOM.

- **Semiconductor Lead Layouts**

CX193

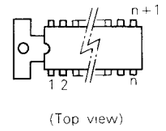

10YG1.1

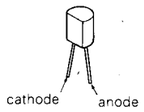

2SA1026-7
2SA1026-8
2SA1027R

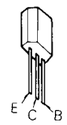

CX20087
CX20088
MSL9357RS
MSL9358RS
MB84069UB
NE5532P
NE5534P
NJM4560P
μPC339C
μPC4558C
μPD547C093
μPD550C047

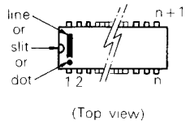

AA5525S
BR5525S
PG5525SX
PY5525S

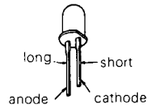

2SA1138
2SC2676
2SD774

N13T1

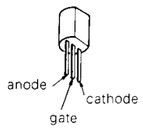

2SB548
2SB731
2SD414
2SD809

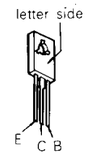

μPC78L05R

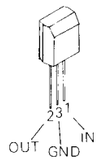

2SA733
2SA1015
2SB646A
2SB646C
2SC945
2SC1364
2SC1364-8
2SC1815
2SD666
2SD666R
2SD789

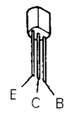

2SB834
2SD880

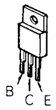

10E2
10YD1.3
30DF2
30DF2-FA
IS1555
EQB01-06
HZ6BIL
HZ6B2L
HZ12A-2L
HZ12B1L
HZ12C3L
HZ15-3L
HZ20-2L
HZ27-1L

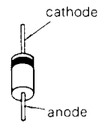

2SA937
2SC2021

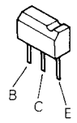

2SK125

2SK245

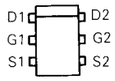

SECTION 5
EXPLODED VIEWS AND PARTS LIST

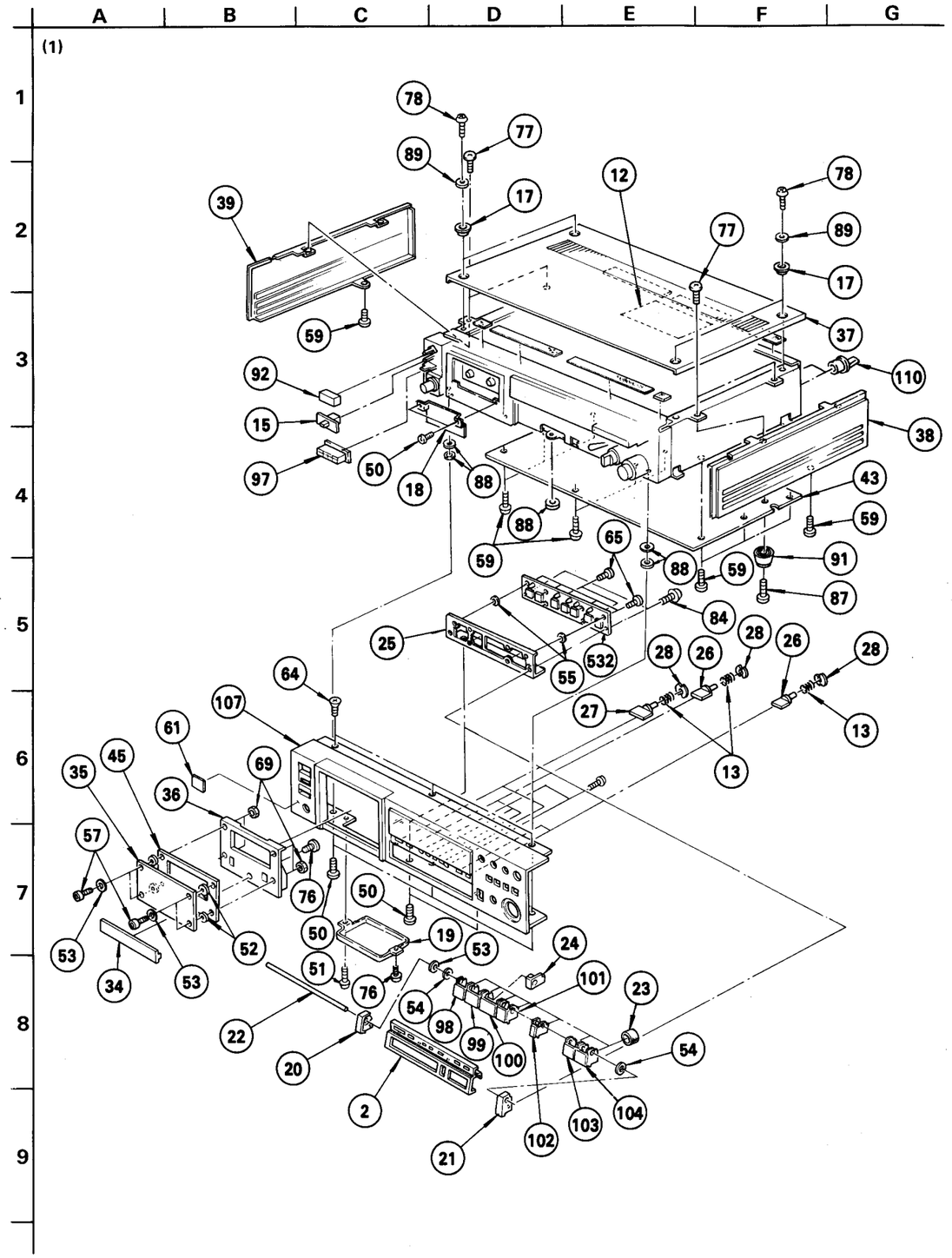

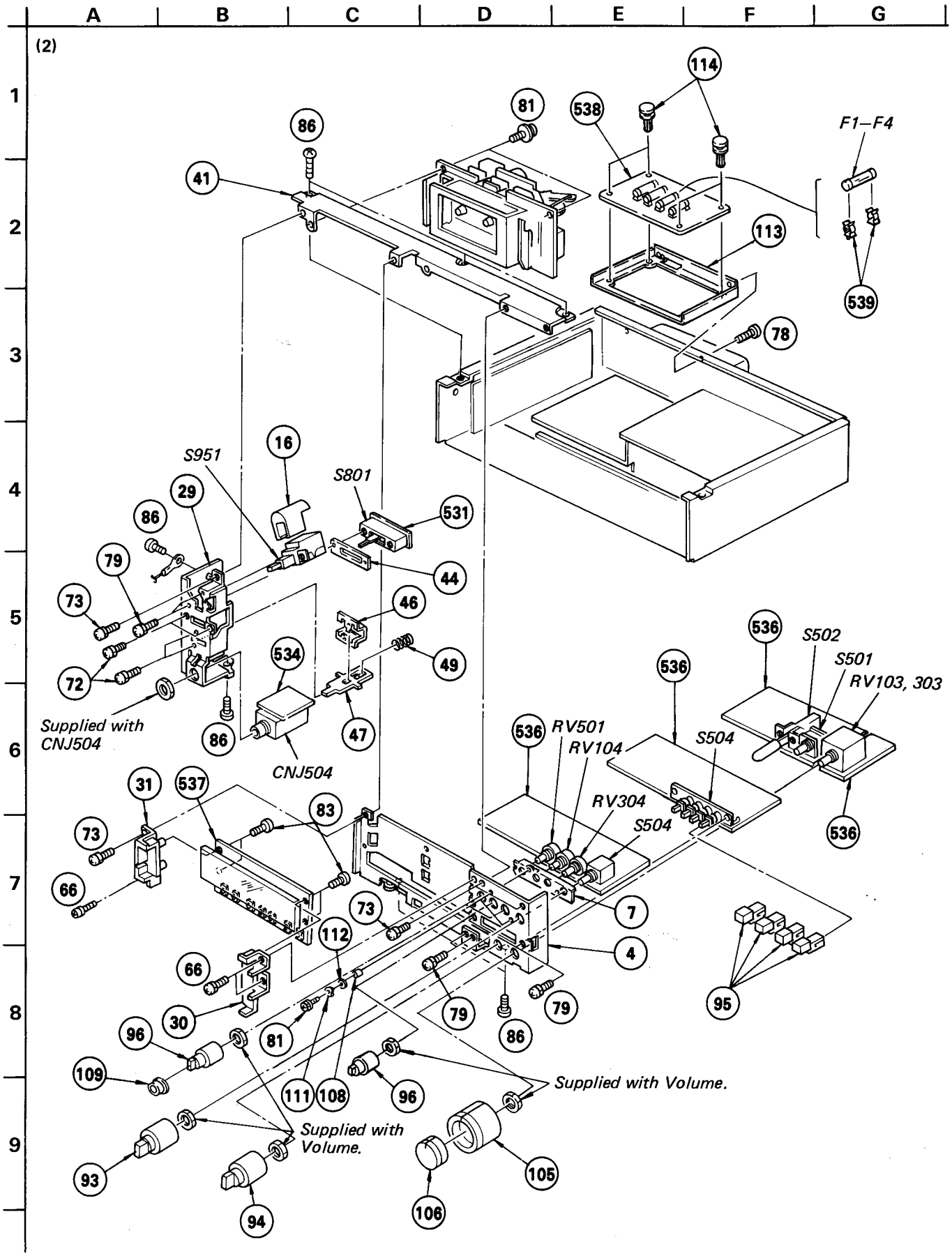
A
B
C
D
E
F
G
(2)
1
2
3
4
5
6
7
8
9
114
81
538
86
F1–F4
41
113
539
78
16
S951
S801
29
531
86
44
79
73
46
536
S502
534
49
S501
536
72
RV103, 303
Supplied with
CNJ504
86
47
536
RV501
S504
RV104
CNJ504
31
537
RV304
83
S504
536
73
66
7
73
112
4
66
95
30
79
79
96
81
86
109
111
108
96
Supplied with Volume.
Supplied with
Volume.
93
105
94
106

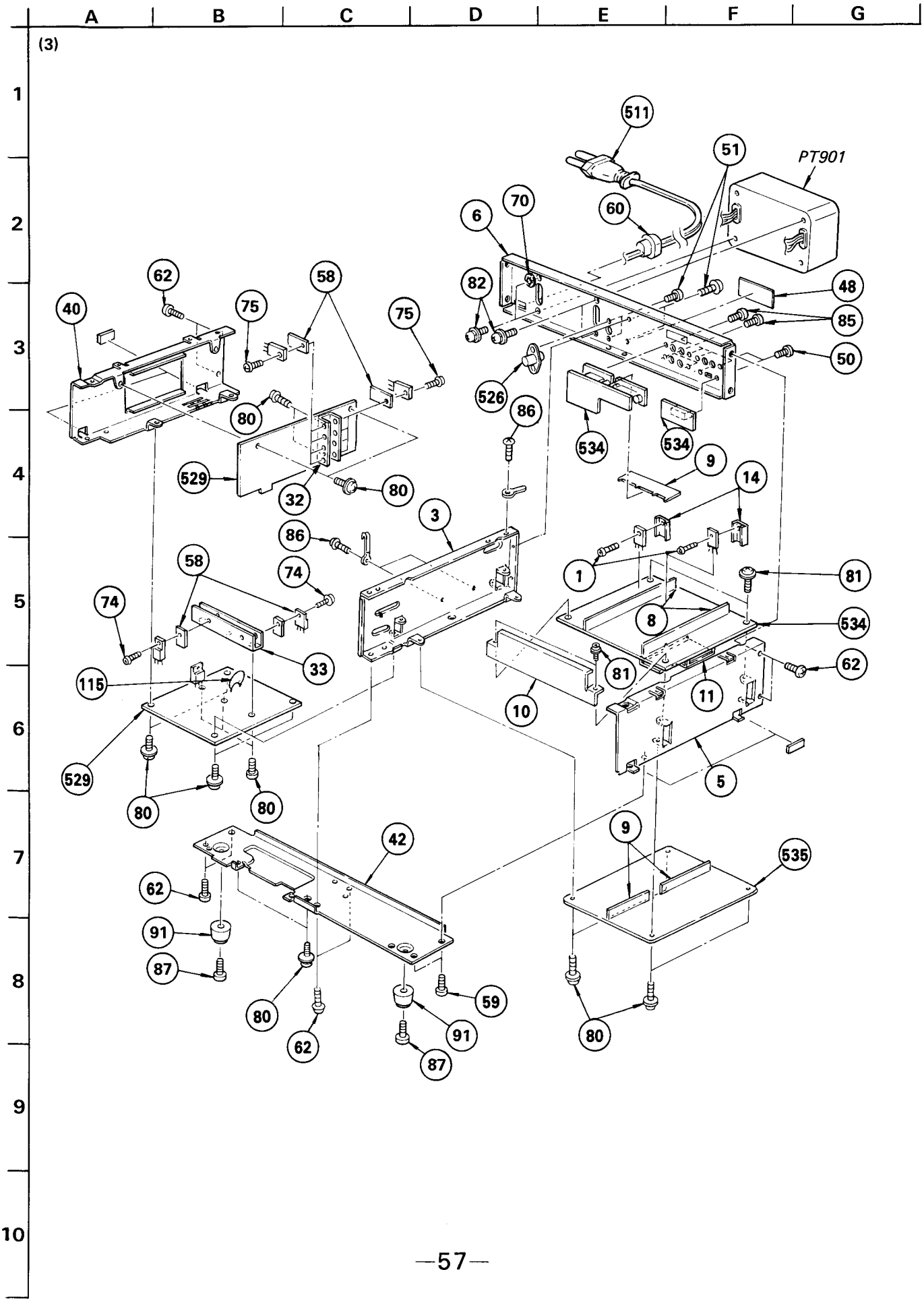
A
B
C
D
E
F
G
(3)
1
2
3
4
5
6
7
8
9
10
511
51
PT901
70
6
60
62
58
82
48
40
75
75
85
50
526
86
534
534
80
9
529
32
80
14
3
86
1
81
58
74
8
534
74
33
81
62
115
11
10
529
5
80
80
42
9
535
62
91
87
80
59
91
80
62
87

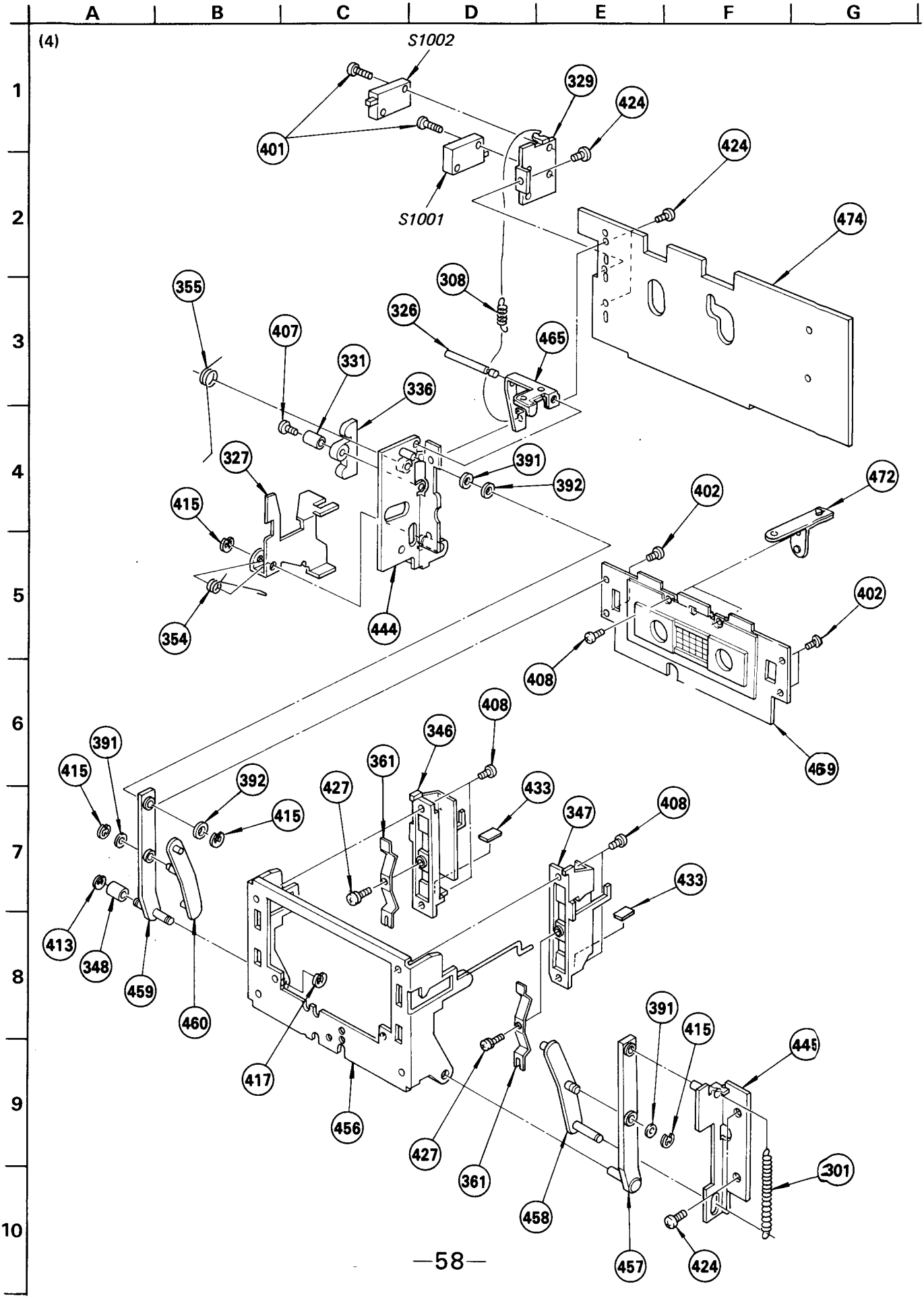
A
B
C
D
E
F
G
1
2
3
4
5
6
7
8
9
10
(4)
S1002
S1001
401
329
424
424
474
308
355
326
407
465
331
336
327
391
392
415
402
472
354
444
402
408
469
408
391
346
415
392
361
427
433
415
347
408
413
348
459
460
433
417
391
415
445
456
427
361
458
457
424
301

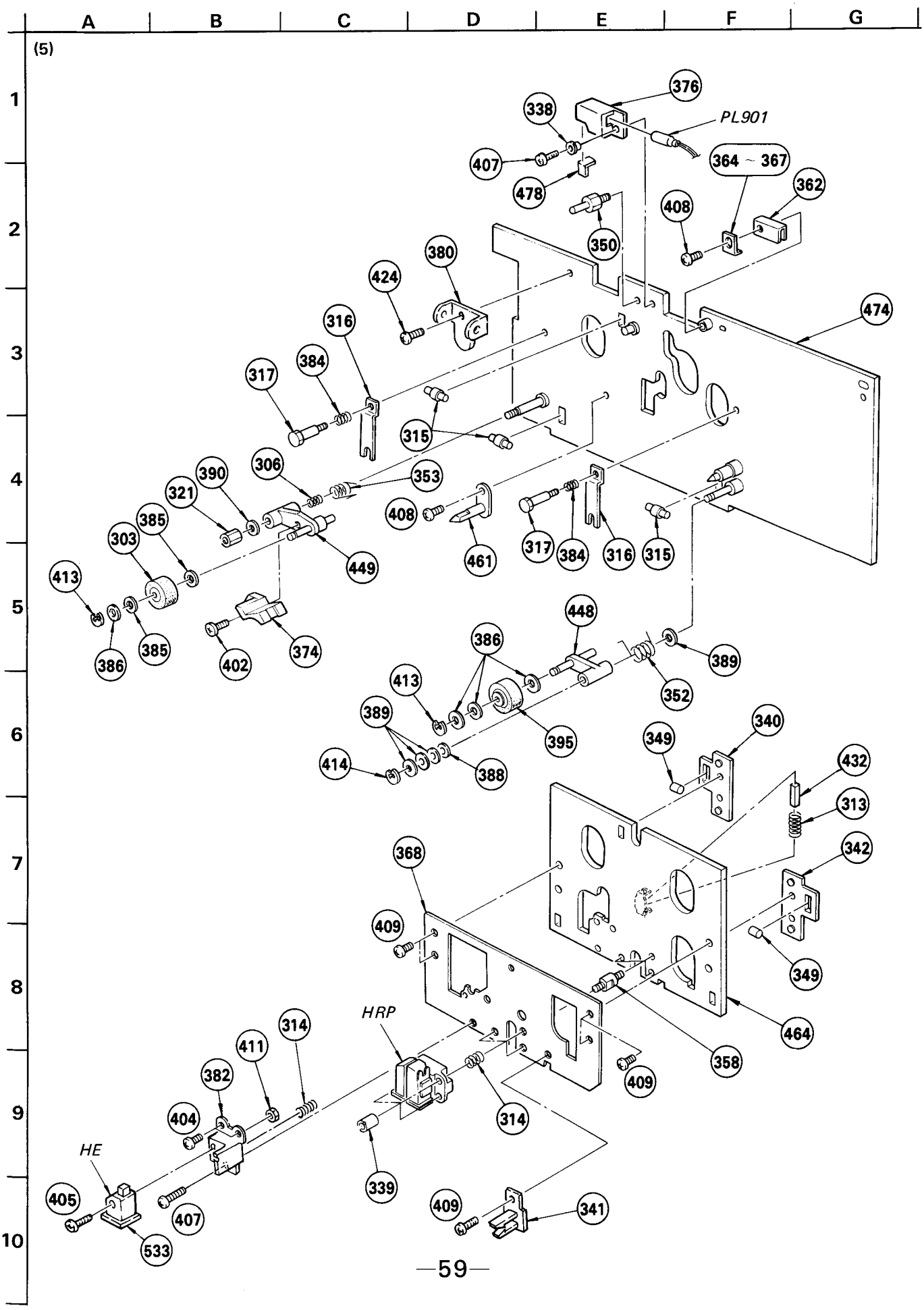
A
B
C
D
E
F
G
1
2
3
4
5
6
7
8
9
10
(5)
376
338
PL901
407
364 ~ 367
478
362
408
350
380
424
474
316
384
317
315
306
353
390
321
408
461
317
384
316
315
385
303
449
413
448
386
385
402
374
386
389
413
352
389
395
340
349
414
388
432
313
368
342
409
349
464
HRP
314
411
358
382
409
404
314
HE
339
405
407
409
341
533

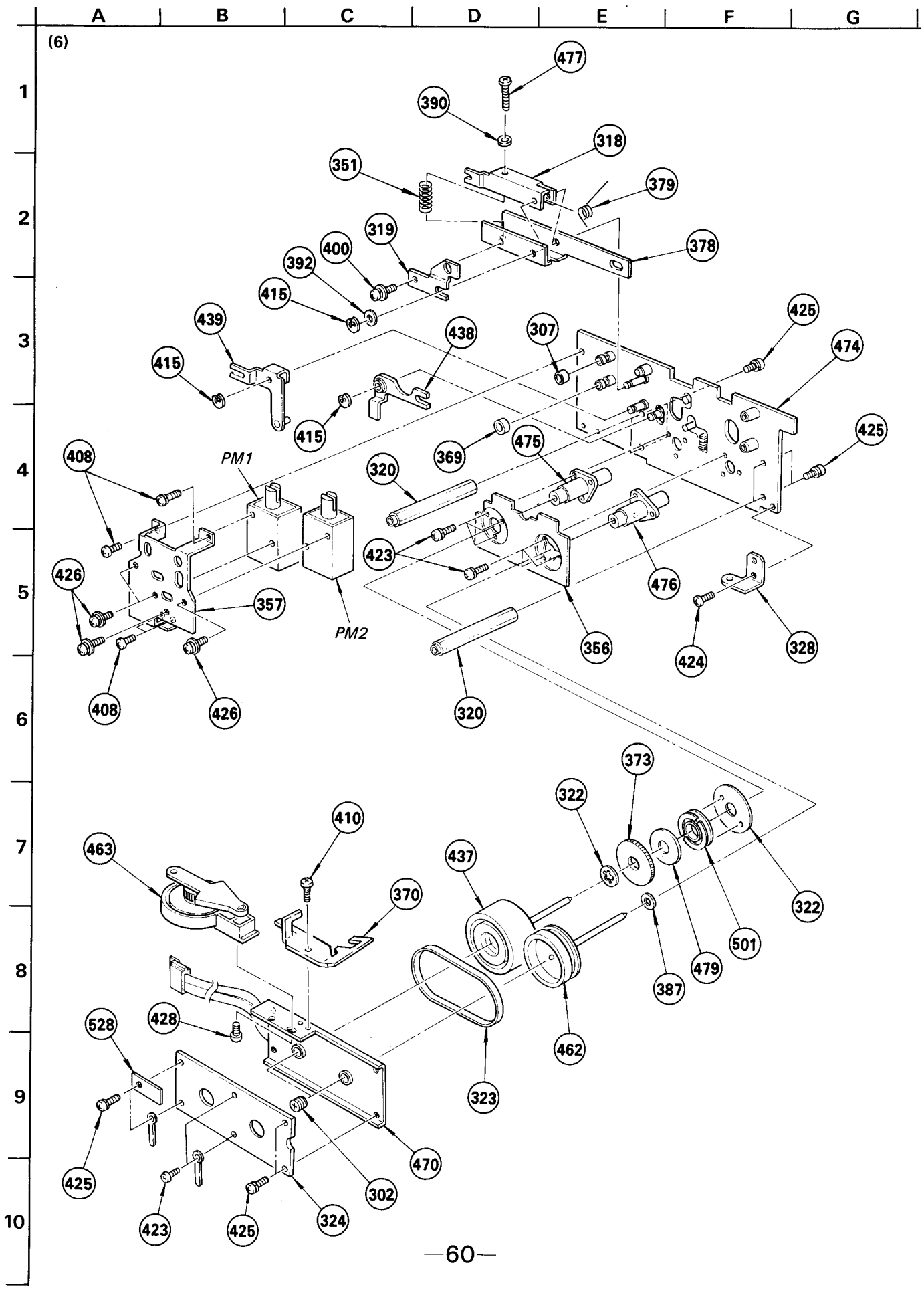
A
B
C
D
E
F
G
1
2
3
4
5
6
7
8
9
10
(6)
477
390
318
351
379
319
400
392
378
415
439
438
307
425
474
415
415
369
475
425
408
PM1
320
423
426
476
357
PM2
356
424
328
408
426
320
373
322
410
463
437
370
322
501
479
387
462
528
428
323
425
470
302
423
425
324

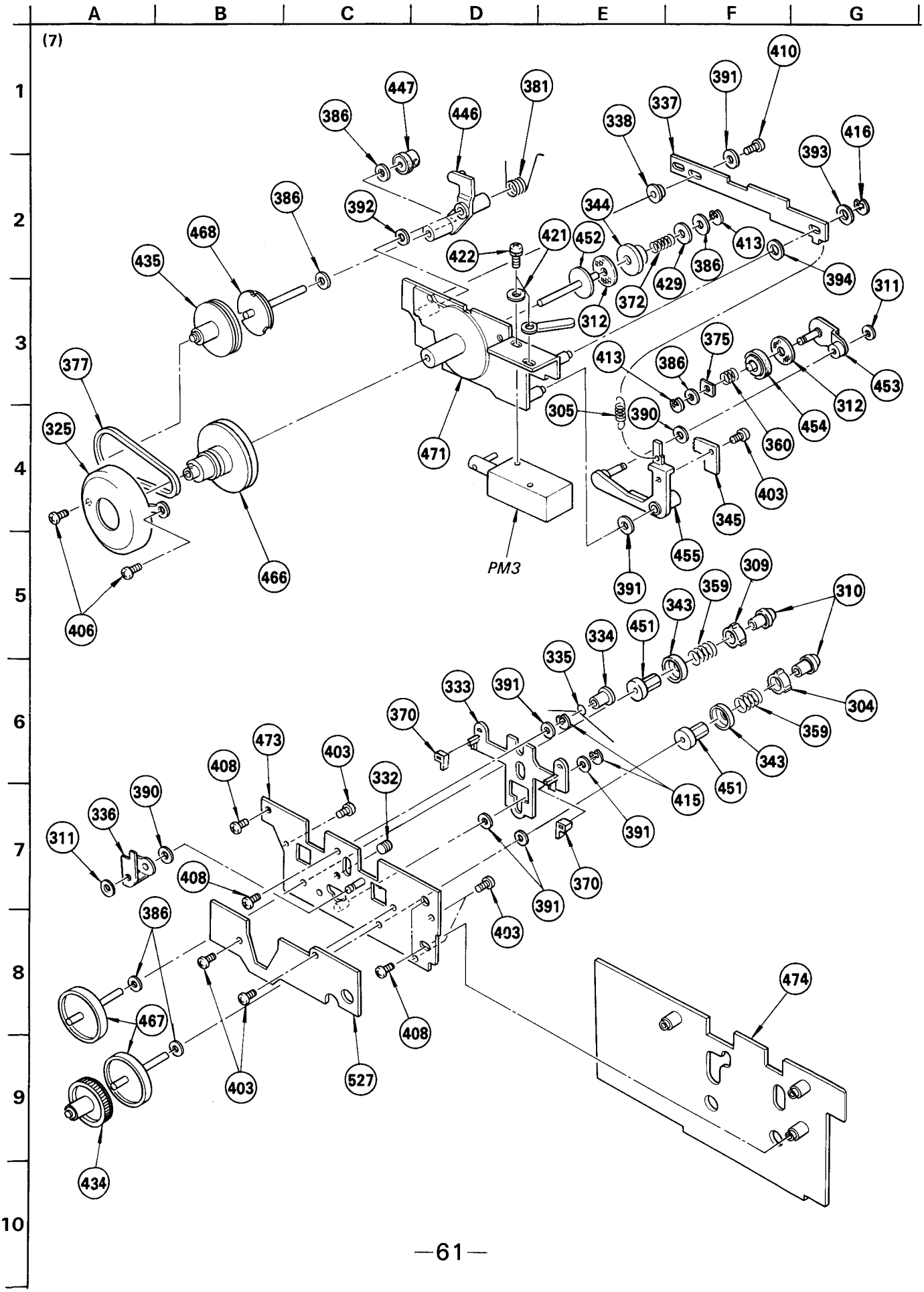
A
B
C
D
E
F
G
(7)
1
2
3
4
5
6
7
8
9
10
410
391
381
337
447
446
386
338
416
393
386
392
344
468
421
452
413
422
429
386
394
435
372
311
312
375
377
413
386
453
312
305
390
454
325
360
471
403
345
455
PM3
391
309
466
359
310
406
343
451
334
335
304
333
391
359
370
343
473
403
451
408
332
415
390
336
391
311
408
370
391
386
403
474
467
408
403
527
434

GENERAL SECTION

No.	Part No.	Description
1	2-259-121-00	SCREW, TR
2	3-311-602-00	SASH (B), CONTROL BUTTON
3 ♠	3-311-603-00	PARTITION, INNER
4 ♠	3-311-605-00	CHASSIS (A), AMPLIFIER
5 ♠	3-311-606-00	PLATE, SIDE, RIGHT
6	3-311-616-00	PLATE, JACK
7 ♠	3-311-608-00	BRACKET, CONTROL
8 ♠	3-311-617-01	REINFORCEMENT, PCB
9 ♠	3-311-617-11	REINFORCEMENT, PCB
10 ♠	3-311-618-00	PLATE, SHIELD, ELECTROSTATIC
11 ♠	3-311-619-00	PLATE, SHIELD, BIAS
12	.....	
13	3-489-043-00	SPRING, COMPRESSION
14 ♠	3-567-242-00	HEAT SINK
15	3-575-515-41	KNOB, SLIDE SWITCH
16	3-575-524-00	COVER, POWER SWITCH
17	3-576-298-11	ESCUTCHEON
18 ♠	3-576-930-00	PLATE, SHIELD, HEAD
19	3-577-602-00	COVER, MECH DECK
20	3-577-604-11	PLATE (L), SIDE, CONTROL BLOCK
21	3-577-605-11	PLATE (R), SIDE, CONTROL BLOCK
22	3-577-606-11	SHAFT
23	3-577-607-00	SPACER, CONTROL BUTTON
24	3-577-615-00	GUIDE, SHAFT, CONTROL BUTTON
25 ♠	3-577-624-00	BRACKET, CONTROL BLOCK
26	3-577-638-11	PUSH BUTTON (A)
27	3-577-640-11	PUSH BUTTON (B)
28	3-577-644-00	SPACER, PUSH BUTTON
29 ♠	3-577-647-00	CHASSIS (B), AMPLIFIER
30 ♠	3-577-648-00	BRACKET (R), FL TUBE
31 ♠	3-577-649-00	BRACKET (L), FL TUBE
32 ♠	3-577-651-00	HEAT SINK, SERVO
33 ♠	3-577-652-00	HEAT SINK, SYSTEM CONTROL
34	3-577-655-11	SASH, CASSETTE WINDOW
35	3-577-656-00	WINDOW, CASSETTE
36	3-577-658-11	FRAME, CASSETTE WINDOW
37	3-577-660-21	COVER
38	3-577-662-11	PLATE, SIDE, ORNAMENTAL, RIGHT
39	3-577-663-11	PLATE, SIDE, ORNAMENTAL, LEFT
40 ♠	3-577-664-00	PLATE, SIDE, LEFT
41 ♠	3-577-666-00	REINFORCEMENT, UPPER
42 ♠	3-577-667-11	REINFORCEMENT, LOWER
43 ♠	3-577-669-11	PLATE, BOTTOM
44	3-577-674-00	SPACER, SWITCH
45	3-577-691-00	PLATE (B), ORNAMENTAL, WINDOW

GENERAL SECTION

No.	Part No.	Description
46 ♠	3-577-692-00	GUIDE (B), EJECT
47 ♠	3-577-693-00	SLIDER (B), EJECT
48	3-311-612-00	LABEL, MODEL NUMBER (AEP1)
49	3-583-507-00	SPRING
50	3-701-428-21	+B 2.6X4 WITH CLAW
51	3-701-429-21	SCREW, +B 3X5, PAWL
52	3-701-438-01	WASHER
53	3-701-438-11	WASHER, 2.5
54	3-701-438-21	WASHER
55	3-701-439-00	W 3, PLASTIC
56	.....	
57	3-701-584-01	BOLT WITH HEXAGONAL HOLE, 2.6X8
58	3-703-037-00	INSULATOR, TO-220
59	3-703-108-21	SCREW +BV 3X6, S TIGHT
60	3-703-244-00	BUSHING, CORD
61	3-703-710-41	STICKER, SONY SYMBOL (12)
62	3-703-685-21	+BV 3X8 WITH CLAW
63	4-854-741-00	CAP, DUST PROTECTION, P.J
64	7-621-559-35	SCREW +K 2.6X5
65	7-621-770-44	SCREW +B 2X5
66	7-621-773-95	SCREW +B 2.6X6
67	7-621-775-10	SCREW +B 2.6X4
68	7-621-775-20	SCREW +B 2.6X5
69	7-622-207-05	N 2.6, TYPE 2
70	7-623-310-07	LW 4, TYPE A
71	7-623-421-07	LW 2.6, TYPE B
72	7-628-254-15	SCREW +PS 2.6X6
73	7-628-254-25	SCREW +PS 2.6X8
74	7-682-142-00	P 3X5, PLASTIC
75	7-682-146-20	SCREW +P 3X5
76	7-682-545-09	SCREW +B 3X4
77	7-682-546-01	+B 3X5
78	7-682-547-09	SCREW +B 3X6
79	7-682-647-01	SCREW +PS 3X6
80	7-682-947-09	SCREW +PSW 3X6
81	7-682-948-01	SCREW +PSW 3X8
82	7-682-961-09	SCREW +PSW 4X8
83	7-685-133-11	SCREW +P 2.6X6 TYPE2 SLIT
84	7-685-534-21	SCREW +BTP 2.6X8 TYPE2 SLIT
85	7-685-545-29	SCREW +BTP 3X6 TYPE2 SLIT
86	7-685-871-01	SCREW +BVTT 3X6 (S)
87	7-685-872-01	SCREW +BVTT 3X8 (S)
88	7-688-003-11	W 3, MIDDLE
89	7-688-003-12	W 3, MIDDLE
90	9-911-841-XX	CUSHION

NOTE:
- Items with no part number and no description are not stocked because they are seldom required for routine service.
- Items marked " ♠ " are not stocked since thev are seldom required for routine service. Some delay should be anticipated when ordering these items.
- Due to standardization, parts with part numbers (Δ-ΔΔΔ-ΔΔΔ-XX or Δ-ΔΔΔΔ-ΔΔΔ-X) may be different from those used in the set.

CAPACITORS:
- All capacitors are in μF. Common capacitors are omitted. Refer to the following lists for their part numbers. MF:μF, PF:μμF.

RESISTORS
- All resistors are in ohms. Common 1/4W, 1/8W and 1/16W carbon resistors are omitted. Refer to the following lists for their part numbers.
- F : nonflammable

COILS
- MMH : mH, UH : μH

The components identified by shading and mark ⚠ are critical for safety. Replace only with part number specified.

SEMICONDUCTORS
In each case, U : μ, for example:
UA···: μA···, UPA···: μPA···, UPC···: μPC, UPD···: μPD···

GENERAL SECTION

No.	Part No.	Description
91	X-3556-910-0	FOOT ASSY, MF
92	X-3575-502-6	KNOB ASSY, POWER
93	X-3577-603-3	KNOB ASSY, MODE
94	X-3577-604-3	KNOB ASSY, LINE OUT
95	X-3577-606-2	KNOB ASSY, SQUARE
96	X-3577-607-4	KNOB ASSY, REC CAL
97	X-3577-608-2	KNOB ASSY, EJECT
98	X-3577-610-4	REW BUTTN ASSY
99	X-3577-611-4	STOP BUTTN ASSY
100	X-3577-612-4	FWD BUTTN ASSY
101	X-3577-613-4	FF BUTTN ASSY
102	X-3577-614-4	REC BUTTN ASSY
103	X-3577-615-4	DAUSE BUTTN ASSY
104	X-3577-616-4	REC MUTE BUTTN ASSY
105	X-3577-617-0	KNOB (RIGHT) ASSY, REC
106	X-3577-618-0	KNOB (LEFT) ASSY, REC
107	X-3577-620-0	PANEL ASSY
108	3-311-622-00	SPACER, VT
109	3-577-676-00	SPACER, REC KNOB
110	.....	
111	7-623-710-17	WASHER 4, WAVE
112	7-688-004-11	W 4, MIDDLE
113 ♣	;3-311-615-00	BRACKET (B), FUSE
114	4-812-134-00	RIVET NYLON, 3.5
115	4-875-455-01	COVER (DIA. 20), CAPACITOR

ACCESSORY & PACKING MATERIAL

No.	Part No.	Description
201	1-551-315-00	CORD, CONNECTION
202	3-311-609-00	BAG, PROTECTION
203	3-311-621-00	INDIVIDUAL CARTON
204	3-577-672-00	CUSHION, FRONT
205	3-577-673-00	CUSHION, REAR
206	3-701-630-00	BAG, POLYETHYLENE
207	3-773-232-11	MANUAL, INSTRUCTION
208	3-773-232-41	MANUAL, INSTRUCTION
209	3-793-481-13	INSTRUCTION
210	3-793-828-11	QUESTIONNAIRE
211	X-3701-105-0	ROD ASSY, CLEANING, HEAD

MECHANISM SECTION

No.	Part No.	Description
301	3-140-235-XX	SPRING, TENSION
302	3-489-073-21	SCREW, THRUST
303	3-491-020-00	PINCH ROLLER
304	3-531-760-00	CLAW, REEL SPINDLE
305	3-534-274-XX	SPRING, TENSION
306	3-537-213-00	SPRING, COMPRESSION
307	3-537-790-11	SUPPORT, TENSION ARM
308	3-541-231-00	SPRING, TENSION
309	3-558-339-00	CLAW (R), REEL TABLE
310	3-558-482-00	CAP, REEL
311	3-558-708-21	WASHER, STOPPER
312	3-564-027-01	FELT, LIMITER
313	3-564-035-00	SPRING, COMPRESSION
314	3-564-121-00	SPRING, COMPRESSION
315	3-576-801-00	ROLLER, BASE, HEAD
316 ♣	;3-576-802-00	RETAINER, ROLLER
317	3-576-803-00	SHAFT, RETAINER, ROLLER
318 ♣	;3-576-805-00	LEVER (B), HEAD UP
319 ♣	;3-576-806-00	DISK, ARM, TAKE-UP
320 ♣	;3-576-807-00	SUPPORT (B)
321	3-576-808-00	ADJUSTOR, PINCH ROLLER
322 ♣	;3-576-810-00	PLATE, RETURN CIRCUIT
323	3-576-812-00	BELT, CAPSTAN
324 ♣	;3-576-815-00	REINFORCEMENT, BASE
325 ♣	;3-576-816-00	CASE, SHIELD, RM
326 ♣	;3-576-819-00	SHAFT, LEVER, GB
327 ♣	;3-576-820-00	ARM, LOCK
328 ♣	;3-576-821-00	BRACKET, CHASSIS, MECHANISM
329 ♣	;3-576-822-00	HOLDER (A), SE
330 ♣	;3-576-823-00	ARM, E
331	3-576-824-00	COLLAR
332	3-576-826-00	SCREW, ADJUSTMENT
333 ♣	;3-576-827-00	PLATE, BRAKE
334 ♣	;3-576-828-00	SHAFT, SPRING, BRAKE
335	3-576-829-00	SPRING
336 ♣	;3-576-830-00	ARM, BRAKE
337 ♣	;3-576-831-00	LEVER, SELECT, MODE
338 ♣	;3-576-832-00	GUIDE, SELECTOR, MODE
339	3-576-834-00	NUT, LOCK
340 ♣	;3-576-836-00	RETAINER (L), ROLLER
341	3-576-837-00	CLAMP, LEAD
342 ♣	;3-576-838-00	RETAINER (R), ROLLER
343	3-576-840-00	RING, TABLE, REEL
344	3-576-841-00	PULLEY, LIMITER
345 ♣	;3-576-842-00	STOPPER, B.T

NOTE:
- Items with no part number and no description are not stocked because they are seldom required for routine service.
- Items marked " ♣ " are not stocked since they are seldom required for routine service. Some delay should be anticipated when ordering these items.
- Due to standardization, parts with part numbers (Δ-ΔΔΔ-ΔΔΔ-XX or Δ-ΔΔΔΔ-ΔΔΔ-X) may be different from those used in the set.

CAPACITORS:
- All capacitors are in μF. Common capacitors are omitted. Refer to the following lists for their part numbers. MF:μF, PF:μμF.

RESISTORS
- All resistors are in ohms. Common 1/4W, 1/8W and 1/16W carbon resistors are omitted. Refer to the following lists for their part numbers.
- F : nonflammable

COILS
- MMH : mH, UH : μH

The components identified by shading and mark ⚠ are critical for safety. Replace only with part number specified.

SEMICONDUCTORS
In each case, U : μ, for example:
UA···: μA···, UPA···: μPA···, UPC···: μPC, UPD···: μPD···

MECHANISM SECTION

No.	Part No.	Description
346	3-576-843-00	GUIDE (LEFT), HOLDER
347	3-576-844-00	GUIDE (RIGHT), HOLDER
348	3-576-845-00	ROLLER
349	3-576-909-00	ROLLER (C)
350	3-576-911-00	PIN (A), POSITIONING, HALF
351	3-576-912-00	SPRING, COMPRESSION
352	3-576-913-00	SPRING (T)
353	3-576-914-00	SPRING (S)
354	3-576-915-00	SPRING
355	3-576-916-00	SPRING
356 ♠	;3-576-917-00	PLATE, SHIELD
357 ♠	;3-576-918-00	BRACKET (B), CHASSIS, MECH
358	3-576-920-00	SHAFT, SUPPORT, HEAD
359	3-576-921-00	SPRING, COMPRESSION
360	3-576-922-00	SPRING, COMPRESSION
361	3-576-924-00	SPRING
362 ♠	;3-576-948-00	STOPPER, CHASSIS, HEAD
363	3-576-950-01	SEAM, STOPPER
364	3-576-950-11	SEAM, STOPPER
365	3-576-950-21	SEAM, STOPPER
366	3-576-950-31	SEAM, STOPPER
367	3-576-950-41	SEAM, STOPPER
368 ♠	;3-576-951-00	SHIELD, CHASSIS, HEAD
369 ♠	;3-576-954-00	RETAINER, SOLENOID
370	3-576-958-01	SHOE, BRAKE
371 ♠	;3-576-959-00	RETAINER, TU PULLEY
372	3-576-960-00	SPRING, COMPRESSION
373 ♠	;3-576-961-01	PLATE, FG
374	3-576-962-00	GUIDE, TAPE
375	3-576-963-00	WASHER, STOPPER
376	3-576-966-00	HOLDER (A), LAMP
377	3-576-967-00	BELT, TAKE-UP
378 ♠	;3-576-969-00	LEVER (A), HEAD UP
379	3-576-970-21	SPRING
380 ♠	;3-576-971-00	HOLDER, GB
381	3-576-974-03	SPRING
382 ♠	;3-576-977-00	BRACKET, E. HEAD
383	.....	
384	3-634-196-00	SPRING
385	3-701-437-01	WASHER
386	3-701-437-11	WASHER
387	3-701-438-21	WASHER
388	3-701-439-01	WASHER
389	3-701-439-11	WASHER
390	3-701-439-21	WASHER

MECHANISM SECTION

No.	Part No.	Description
391	3-701-441-11	WASHER
392	3-701-441-21	WASHER
393	3-701-443-11	WASHER
394	3-701-443-21	WASHER, 5
395	3-701-455-11	PINCH ROLLER
396	7-621-731-08	SET-SCT, HEX. 2X2.5, FLAT POINT
397	7-621-732-08	SET-SCT, HEX. 2X3 FLAT POINT
398	7-621-734-09	SET-SCT, HEX. 2.6X3
399	7-621-735-09	SET-SCT, HEX. 2.6X4
400	7-621-759-35	+PSW, 2.6X5
401	7-621-770-96	SCREW +B 2X8
402	7-621-772-10	SCREW +B 2X4
403	7-621-772-15	SCREW +B 2X4
404	7-621-772-40	SCREW +B 2X8
405	7-621-772-60	SCREW +B 2X12
406	7-621-773-93	SCREW +B 2.6X3
407	7-621-773-95	SCREW +B 2.6X6
408	7-621-775-10	SCREW +B 2.6X4
409	7-621-775-20	SCREW +B 2.6X5
410	7-621-775-25	SCREW +B 2.6X5
411	7-622-205-05	N 2, TYPE 2
412	7-624-101-04	STOP RING 1.2 (E TYPE)
413	7-624-102-04	STOP RING 1.5, TYPE -E
414	7-624-105-04	STOP RING 2.3, TYPE -E
415	7-624-106-04	STOP RING 3.0, TYPE -E
416	7-624-108-04	STOP RING 4.0, TYPE -E
417	7-624-118-01	RING, RETAINING E-2.5
418	7-624-190-81	STOP RING 2, TYPE-CS
419	7-624-193-08	STOP RING 3, GRIP
420	7-625-712-00	RIVET 2X3
421	7-628-002-11	W 2.6, MIDDLE
422	7-628-253-95	SCREW +PS 2.6X4
423	7-628-254-15	SCREW +PS 2.6X6
424	7-682-546-09	SCREW +B 3X5
425	7-682-647-01	SCREW +PS 3X6
426	7-682-946-01	SCREW +PSW 3X5
427	7-685-502-24	TOTSU PTPWH 2X4, TYPE 2, SLIT
428	7-687-246-21	SCREW, TOTSU PTPWH 3X8, TYPE2
429	7-688-001-11	W 2, MIDDLE
430	7-688-002-01	W 2.6, SMALL
431	7-688-002-11	W 2.6, MIDDLE
432	9-911-815-02	CUSHION
433	9-911-838-XX	RETAINER, CASSETTE
434	A-2131-003-A	DRUM COMPLETE ASSY, BT
435	A-2138-004-A	HOLDER COMPLETE ASSY, MAGNET

NOTE:
- Items with no part number and no description are not stocked because they are seldom required for routine service.
- Items marked " ♠ " are not stocked since they are seldom required for routine service. Some delay should be anticipated when ordering these items.
- Due to standardization, parts with part numbers (Δ-ΔΔΔ-ΔΔΔ-XX or Δ-ΔΔΔΔ-ΔΔΔ-X) may be different from those used in the set.

CAPACITORS:
- All capacitors are in μF. Common capacitors are omitted. Refer to the following lists for their part numbers. MF:μF, PF:μμF.

RESISTORS
- All resistors are in ohms. Common 1/4W, 1/8W and 1/16W carbon resistors are omitted. Refer to the following lists for their part numbers.
- F : nonflammable

COILS
- MMH : mH, UH : μH

The components identified by shading and mark ⚠ are critical for safety. Replace only with part number specified.

SEMICONDUCTORS
In each case, U : μ, for example:
UA···: μA···, UPA···: μPA···, UPC···: μPC, UPD···: μPD···

MECHANISM SECTION

No.	Part No.	Description
436	.....	
437	X-3310-811-0	FLYWHEEL (T) ASSY
438 ♠	;X-3576-801-0	LEVER ASSY, PRESS
439 ♠	;X-3576-802-0	LEVER ASSY, CHANGE
440-443	.....	
444 ♠	;X-3576-805-0	PLATE (L) ASSY, FULCRUM
445 ♠	;X-3576-806-0	PLATE (R) ASSY, FULCRUM
446	X-3576-812-0	ARM ASSY, TAKE-UP
447	X-3576-813-0	PULLEY ASSY, TAKE-UP
448	X-3576-815-0	PINCH LEVER (T) ASSY
449	X-3576-816-0	PINCH LEVER (S) ASSY
450	.....	
451	X-3576-817-0	TABLE (B) ASSY, REEL
452	X-3576-819-0	PULLEY (2) ASSY, MOTOR, REEL
453	X-3576-821-0	ARM (2) ASSY, FR
454	X-3576-822-0	IDLER ASSY, FR
455 ♠	;X-3576-823-0	ARM (1) ASSY, FR
456	X-3576-824-0	HOLDER ASSY, CASSETTE
457 ♠	;X-3576-825-0	LEVER ASSY (R), SWING
458	X-3576-826-0	ARM ASSY (R), CONNECT
459 ♠	;X-3576-827-0	LEVER ASSY (L), SWING
460	X-3576-828-0	ARM ASSY (L), CONNECT
461	X-3576-831-0	GUIDE ASSY, CASSETTE
462	X-3576-832-0	FLYWHEEL (S) ASSY
463	X-3576-833-0	SE ASSY
464	X-3576-834-0	CHASSIS ASSY, HEAD
465	X-3576-839-1	LEVER GB ASSY
466	X-3576-840-1	MOTOR PULLEY ASSY
467	X-3576-841-2	S REEL TABLE ASSY
468	X-3576-843-1	HP HOLDER ASSY
469	X-3576-845-2	BACK BOARD ASSY
470	X-3576-846-1	MOTOR BOARD ASSY
471	X-3576-849-1	SUB CHASSIS ASSY
472	X-3576-850-0	SPRING ASSY
473 ♠	;X-3576-852-0	COVER ASSY, SUB CHASSIS
474 ♠	;X-3576-853-0	CHASSIS ASSY, MECHANICAL
475	X-3576-854-1	HOLDER (A) ASSY
476	X-3576-855-1	HOLDER (B) ASSY
477	7-721-775-75	B 2.6X14
478 ♠	;3-576-978-00	FILM, RH
479	3-310-865-00	WASHER, INSULATING

ELECTRICAL PARTS

Ref.No.	Part No.	Description
501	1-459-426-00	COIL, FG
502 ♠	;1-508-819-00	17MM BASE POST
503 ♠	;1-508-820-00	17MM BASE POST
504 ♠	;1-508-878-00	BASE POST
505 ♠	;1-508-879-00	BASE POST
506 ♠	;1-508-880-00	BASE POST, MCD CONNECTOR 6P
507 ♠	;1-508-881-00	BASE POST
508 ♠	;1-508-882-00	BASE POST
509	1-519-277-00	INDICATOR TUBE, FLUORESCENT
510 ♠	;1-535-116-00	TERMINAL
511 ⚠	.1-555-795-00	CORD, POWER
512	.....	
513 ♠	;1-560-061-00	PIN, CONNECTOR 3P
514	.....	
515 ♠	;1-560-062-00	PIN, CONNECTOR 4P
516	.....	
517	.....	
518	.....	
519 ♠	;1-560-063-00	PIN, CONNECTOR 5P
520 ♠	;1-562-249-00	SOCKET, CONNECTOR 4P
521 ♠	;1-562-250-00	SOCKET, CONNECTOR 5P
522 ♠	;1-562-251-00	SOCKET, CONNECTOR 6P
523 ♠	;1-560-064-00	PIN, CONNECTOR 6P
524	.....	
525	.....	
526	1-561-598-00	SOCKET 4P
527 ♠	;1-604-268-00	PC BOARD, SENSOR
528 ♠	;1-604-269-00	PC BOARD, TERMINAL
529 ♠	;A-2019-157-A	MOUNTED PCB, SYSTEM CONTROL
530 ♠	;A-2020-076-A	MOUNTED PCB, SERVO
531 ♠	;1-604-295-00	PC BOARD, TIMER SWITCH
532 ♠	;1-604-296-00	PC BOARD, CONTROL SW
533 ♠	;1-608-268-00	PC BOARD, ERASE HEAD
534 ♠	;A-2056-179-A	PC BOARD ASSY, RECORD/PLAYBACK
535 ♠	;A-2030-011-A	MOUNTED PCB, N,R
536 ♠	;A-2056-180-A	PC BOARD ASSY, CONTROL
537 ♠	;A-2029-087-A	MOUNTED PCB, METER
538 ⚠	.1-605-010-00	PC BOARD, FUSE
539 ⚠	.1-533-131-00	HOLDER, FUSE

C01	1-161-321-00	CERAMIC	680PF	10%	50V
C02	1-131-498-00	TANTALUM	1MF	20%	25V
C03	1-161-321-00	CERAMIC	680PF	10%	50V
C04	1-161-321-00	CERAMIC	680PF	10%	50V
C05	1-131-383-00	TANTALUM	10MF	10%	6.3V
C06	1-123-306-00	ELECT	47MF	20%	10V

NOTE:
- Items with no part number and no description are not stocked because they are seldom required for routine service.
- Items marked " ♠ " are not stocked since they are seldom required for routine service. Some delay should be anticipated when ordering these items.
- Due to standardization, parts with part numbers (Δ-ΔΔΔ-ΔΔΔ-XX or Δ-ΔΔΔΔ-ΔΔΔ-X) may be different from those used in the set.

CAPACITORS:
- All capacitors are in μF. Common capacitors are omitted. Refer to the following lists for their part numbers. MF:μF, PF:μμF.

RESISTORS
- All resistors are in ohms. Common 1/4W, 1/8W and 1/16W carbon resistors are omitted. Refer to the following lists for their part numbers.
- F : nonflammable

COILS
- MMH : mH, UH : μH

The components identified by shading and mark ⚠ are critical for safety. Replace only with part number specified.

SEMICONDUCTORS
In each case, U : μ, for example :
UA···: μA···, UPA···: μPA···, UPC···: μPC, UPD···: μPD···

ELECTRICAL PARTS

Ref.No.	Part No.	Description			
C07	1-130-627-00	FILM	0.039MF	5%	50V
C08	1-161-321-00	CERAMIC	680PF	10%	50V
C09	1-161-321-00	CERAMIC	680PF	10%	50V
C10	1-123-330-00	ELECT	22MF	20%	25V
C11	1-131-371-00	TANTALUM	10MF	20%	16V
C12	1-161-321-00	CERAMIC	680PF	10%	50V
C13	1-161-321-00	CERAMIC	680PF	10%	50V
C102	1-123-709-00	ELECT	1MF	20%	50V
C104	1-107-284-00	MICA	22PF	5%	100V
C105	1-130-683-00	FILM	0.027MF	2%	630V
C106	1-124-336-00	ELECT	10MF	20%	100V
C107	1-107-300-00	MICA	100PF	5%	100V
C108	1-130-273-00	FILM	0.001MF	5%	100V
C109	1-124-336-00	ELECT	10MF	20%	100V
C110	1-124-332-00	ELECT	2.2MF	20%	100V
C111	1-124-336-00	ELECT	10MF	20%	100V
C112	1-124-332-00	ELECT	2.2MF	20%	100V
C113	1-123-693-00	ELECT	100MF	20%	25V
C114	1-130-323-00	FILM	0.12MF	5%	100V
C115	1-124-332-00	ELECT	2.2MF	20%	100V
C116	1-124-338-00	ELECT	22MF	20%	100V
C117	1-107-303-00	MICA	130PF	5%	100V
C118	1-130-279-00	FILM	0.0018MF	5%	100V
C120	1-124-185-00	ELECT	4.7MF	20%	50V
C121	1-107-284-00	MICA	22PF	5%	100V
C125	1-130-967-00	FILM	0.0027MF	3%	100V
C126	1-107-308-00	MICA	220PF	5%	100V
C127	1-107-308-00	MICA	220PF	5%	100V
C128	1-107-302-00	MICA	120PF	5%	100V
C129	1-130-955-00	FILM	0.01MF	3%	100V
C130	1-130-892-00	FILM	0.015MF	3%	100V
C131	1-130-955-00	FILM	0.01MF	3%	100V
C132	1-130-629-00	FILM	0.056MF	5%	50V
C133	1-130-635-00	FILM	0.18MF	5%	50V
C134	1-130-635-00	FILM	0.18MF	5%	50V
C135	1-130-629-00	FILM	0.056MF	5%	50V
C136	1-130-625-00	FILM	0.027MF	5%	50V
C137	1-124-182-51	ELECT	1MF	20%	50V
C138	1-130-635-00	FILM	0.18MF	5%	50V
C139	1-130-629-00	FILM	0.056MF	5%	50V
C140	1-130-633-00	FILM	0.12MF	5%	50V
C141	1-124-182-51	ELECT	1MF	20%	50V
C142	1-124-336-00	ELECT	10MF	20%	100V
C143	1-124-332-00	ELECT	2.2MF	20%	100V
C144	1-124-332-00	ELECT	2.2MF	20%	100V

ELECTRICAL PARTS

Ref.No.	Part No.	Description			
C145	1-107-298-00	MICA	82PF	5%	100V
C146	1-130-287-00	FILM	0.0039MF	5%	100V
C147	1-130-285-00	FILM	0.0033MF	5%	100V
C148	1-130-281-00	FILM	0.0022MF	5%	100V
C149	1-123-380-00	ELECT	1MF	20%	50V
C150	1-107-308-00	MICA	220PF	5%	100V
C151	1-107-308-00	MICA	220PF	5%	100V
C152	1-107-302-00	MICA	120PF	5%	100V
C153	1-130-955-00	FILM	0.01MF	3%	100V
C154	1-130-892-00	FILM	0.015MF	3%	100V
C155	1-130-955-00	FILM	0.01MF	3%	100V
C156	1-130-629-00	FILM	0.056MF	5%	50V
C157	1-130-635-00	FILM	0.18MF	5%	50V
C158	1-130-635-00	FILM	0.18MF	5%	50V
C159	1-130-629-00	FILM	0.056MF	5%	50V
C160	1-130-625-00	FILM	0.027MF	5%	50V
C161	1-124-182-51	ELECT	1MF	20%	50V
C162	1-130-635-00	FILM	0.18MF	5%	50V
C163	1-130-629-00	FILM	0.056MF	5%	50V
C164	1-130-633-00	FILM	0.12MF	5%	50V
C165	1-124-182-51	ELECT	1MF	20%	50V
C166	1-124-336-00	ELECT	10MF	20%	100V
C171	1-130-640-00	FILM	0.47MF	5%	50V
C172	1-124-185-00	ELECT	4.7MF	20%	50V
C173	1-130-640-00	FILM	0.47MF	5%	50V
C174	1-130-969-00	FILM	0.012MF	3%	100V
C175	1-130-973-00	FILM	0.022MF	3%	100V
C176	1-130-307-00	FILM	0.027MF	5%	100V
C177	1-130-975-00	FILM	0.03MF	3%	100V
C178	1-130-315-00	FILM	0.056MF	5%	100V
C179	1-130-973-00	FILM	0.022MF	3%	100V
C180	1-130-311-00	FILM	0.039MF	5%	100V
C181	1-123-380-00	ELECT	1MF	20%	50V
C501	1-123-697-00	ELECT	1000MF	20%	25V
C502	1-123-693-00	ELECT	100MF	20%	25V
C503	1-107-300-00	MICA	100PF	5%	100V
C504	1-107-284-00	MICA	22PF	5%	100V
C505	1-123-390-00	ELECT	330MF	20%	63V
C506	1-131-450-00	TANTALUM	1MF	20%	50V
C507	1-123-697-00	ELECT	1000MF	20%	25V
C508	1-123-693-00	ELECT	100MF	20%	25V
C509	1-107-300-00	MICA	100PF	5%	100V
C510	1-107-284-00	MICA	22PF	5%	100V
C511	1-123-390-00	ELECT	330MF	20%	63V
C512	1-131-450-00	TANTALUM	1MF	20%	50V

NOTE:
- Items with no part number and no description are not stocked because they are seldom required for routine service.
- Items marked " ♦ " are not stocked since they are seldom required for routine service. Some delay should be anticipated when ordering these items.
- Due to standardization, parts with part numbers (Δ-ΔΔΔ-ΔΔΔ-XX or Δ-ΔΔΔΔ-ΔΔΔ-X) may be different from those used in the set.

CAPACITORS:
- All capacitors are in μF. Common capacitors are omitted. Refer to the following lists for their part numbers. MF:μF, PF:μμF.

RESISTORS
- All resistors are in ohms. Common 1/4W, 1/8W and 1/16W carbon resistors are omitted. Refer to the following lists for their part numbers.
- F : nonflammable

COILS
- MMH : mH, UH : μH

The components identified by shading and mark ⚠ are critical for safety. Replace only with part number specified.

SEMICONDUCTORS
In each case, U : μ, for example:
UA···: μA···, UPA···: μPA··, UPC···: μPC, UPD···: μPD···

ELECTRICAL PARTS

Ref.No.	Part No.	Description			
C513	1-123-371-00	ELECT	22MF	20%	63V
C514	1-123-371-00	ELECT	22MF	20%	63V
C515	1-107-284-00	MICA	22PF	5%	100V
C516	1-107-284-00	MICA	22PF	5%	100V
C517	1-123-709-00	ELECT	1MF	20%	50V
C518	1-123-709-00	ELECT	1MF	20%	50V
C519	1-123-328-00	ELECT	4.7MF	20%	25V
C522	1-130-624-00	FILM	0.022MF	5%	50V
C523	1-130-624-00	FILM	0.022MF	5%	50V
C524	1-108-561-00	MYLAR	0.0018MF	5%	50V
C525	1-108-561-00	MYLAR	0.0018MF	5%	50V
C526	1-123-356-00	ELECT	10MF	20%	25V
C531	1-124-182-51	ELECT	1MF	20%	50V
C532	1-130-620-00	FILM	0.01MF	5%	50V
C533	1-130-624-00	FILM	0.022MF	5%	50V
C534	1-130-620-00	FILM	0.01MF	5%	50V
C535	1-123-371-00	ELECT	22MF	20%	63V
C536	1-123-371-00	ELECT	22MF	20%	63V
C537	1-123-371-00	ELECT	22MF	20%	63V
C538	1-123-371-00	ELECT	22MF	20%	63V
C539	1-123-356-00	ELECT	10MF	20%	25V
C540	1-161-321-00	CERAMIC	680PF	10%	50V
C541	1-124-071-00	ELECT	330MF	20%	10V
C542	1-124-071-00	ELECT	330MF	20%	10V
C543	1-124-071-00	ELECT	330MF	20%	10V
C544	1-124-071-00	ELECT	330MF	20%	10V
C545	1-124-092-00	ELECT	10MF	20%	50V
C546	1-124-092-00	ELECT	10MF	20%	50V
C601	1-161-326-00	CERAMIC	0.0022MF	30%	50V
C602	1-161-330-00	CERAMIC	0.01MF	30%	25V
C603	1-130-624-00	FILM	0.022MF	5%	50V
C604	1-130-624-00	FILM	0.022MF	5%	50V
C605	1-124-070-00	ELECT	220MF	20%	10V
C606	1-130-188-00	FILM	0.01MF	5%	100V
C607	1-130-620-00	FILM	0.01MF	5%	50V
C608	1-130-625-00	FILM	0.027MF	5%	50V
C609	1-108-573-00	MYLAR	0.0056MF	5%	50V
C610	1-124-092-00	ELECT	10MF	20%	50V
C611	1-102-905-00	CERAMIC	130PF	5%	50V
C612	1-102-522-00	CERAMIC	51PF	5%	50V
C613	1-102-905-00	CERAMIC	130PF	5%	50V
C614	1-130-634-00	FILM	0.15MF	5%	50V
C615	1-130-631-00	FILM	0.082MF	5%	50V
C616	1-130-308-00	FILM	0.03MF	5%	100V
C617	1-130-301-00	FILM	0.015MF	5%	100V

ELECTRICAL PARTS

Ref.No.	Part No.	Description			
C622	1-123-228-00	ELECT	1MF	20%	50V
C623	1-123-228-00	ELECT	1MF	20%	50V
C701	1-123-231-00	ELECT	3.3MF	20%	50V
C702	1-130-629-00	FILM	0.056MF	5%	50V
C703	1-123-231-00	ELECT	3.3MF	20%	50V
C704	1-130-629-00	FILM	0.056MF	5%	50V
C751	1-124-083-00	ELECT	220MF	20%	25V
C752	1-124-080-00	ELECT	33MF	20%	25V
C753	1-124-086-00	ELECT	1000MF	20%	25V
C754	1-124-083-00	ELECT	220MF	20%	25V
C755	1-124-080-00	ELECT	33MF	20%	25V
C756	1-124-086-00	ELECT	1000MF	20%	25V
C801	1-123-306-00	ELECT	47MF	20%	10V
C802	1-123-306-00	ELECT	47MF	20%	10V
C803	1-123-356-00	ELECT	10MF	20%	25V
C804	1-123-328-00	ELECT	4.7MF	20%	25V
C805	1-108-603-00	MYLAR	0.1MF	5%	50V
C806	1-161-379-00	CERAMIC	0.01MF	20%	25V
C807	1-161-379-00	CERAMIC	0.01MF	20%	25V
C808	1-161-379-00	CERAMIC	0.01MF	20%	25V
C809	1-161-321-00	CERAMIC	680PF	10%	50V
C810	1-161-321-00	CERAMIC	680PF	10%	50V
C811	1-123-379-00	ELECT	0.47MF	20%	50V
C812	1-123-379-00	ELECT	0.47MF	20%	50V
C813	1-123-328-00	ELECT	4.7MF	20%	25V
C814	1-123-379-00	ELECT	0.47MF	20%	50V
C815	1-123-379-00	ELECT	0.47MF	20%	50V
C816	1-123-380-00	ELECT	1MF	20%	50V
C817	1-108-591-00	MYLAR	0.033MF	5%	50V
C818	1-123-306-00	ELECT	47MF	20%	10V
C951	1-123-517-00	ELECT	1000MF	20%	50V
C952	1-123-515-00	ELECT	330MF	20%	50V
C953	1-123-508-00	ELECT	1000MF	20%	35V
C954	1-123-513-00	ELECT	100MF	20%	50V
C955	1-123-356-00	ELECT	10MF	20%	50V
C956	1-161-379-00	CERAMIC	0.01MF	20%	25V
C957	1-123-504-00	ELECT	100MF	20%	25V
C958	1-123-356-00	ELECT	10MF	20%	25V
C959	1-161-379-00	CERAMIC	0.01MF	20%	25V
C960	1-123-504-00	ELECT	100MF	20%	25V
C961	1-123-499-00	ELECT	2200MF	20%	25V
C962	1-123-493-00	ELECT	47MF	20%	25V
C963	1-123-489-00	ELECT	2200MF	20%	16V
C964	1-123-306-00	ELECT	47MF	20%	10V
C965	1-161-379-00	CERAMIC	0.01MF	20%	25V

NOTE:
- Items with no part number and no description are not stocked because they are seldom required for routine service.
- Items marked " ♦ " are not stocked since they are seldom required for routine service. Some delay should be anticipated when ordering these items.
- Due to standardization, parts with part numbers (Δ-ΔΔΔ-ΔΔΔ-XX or Δ-ΔΔΔΔ-ΔΔΔ-X) may be different from those used in the set.

CAPACITORS:
- All capacitors are in μF. Common capacitors are omitted. Refer to the following lists for their part numbers. MF:μF, PF:μμF.

RESISTORS
- All resistors are in ohms. Common 1/4W, 1/8W and 1/16W carbon resistors are omitted. Refer to the following lists for their part numbers.
- F : nonflammable

COILS
- MMH : mH, UH : μH

The components identified by shading and mark ⚠ are critical for safety. Replace only with part number specified.

SEMICONDUCTORS
In each case, U : μ, for example:
UA···: μA···, UPA···: μPA···, UPC···: μPC, UPD···: μPD···

ELECTRICAL PARTS

Ref.No.	Part No.	Description			
C966	1-123-479-00	ELECT	2200MF	20%	10V
C991	1-124-346-00	ELECT	6800MF	20%	25V
C992	1-124-346-00	ELECT	6800MF	20%	25V
CNJ501	1-507-726-00	JACK, PIN 2P			
CNJ502	1-507-726-00	JACK, PIN 2P			
CNJ503	1-507-726-00	JACK, PIN 2P			
CNJ504	1-507-649-00	JACK			
♠ CNJ601	1-560-061-41	PIN, CONNECTOR 3P			
♠ CNJ602	1-560-066-00	PIN, CONNECTOR 10P			
♠ CNJ701	1-560-061-00	PIN, CONNECTOR 3P			
♠ CNJ702	1-560-066-00	PIN, CONNECTOR 10P			
♠ CNP801	1-560-061-41	PIN, CONNECTOR 3P			
♠ CNP802	1-560-338-00	PIN, CONNECTOR 7P			
♠ CNP803	1-560-061-21	PIN, CONNECTOR 3P			
♠ CNP804	1-560-060-00	PIN, CONNECTOR 2P			
♠ CNP805	1-560-060-00	PIN, CONNECTOR 2P			
♠ CNP806	1-560-060-00	PIN, CONNECTOR 2P			
♠ CNP807	1-560-064-41	PIN, CONNECTOR 6P			
♠ CNP808	1-560-062-00	PIN, CONNECTOR 4P			
♠ CNP809	1-560-062-41	PIN, CONNECTOR 4P			
♠ CNP810	1-560-065-00	PIN, CONNECTOR 8P			
♠ CNP811	1-560-063-00	PIN, CONNECTOR 5P			
♠ CNP812	1-560-064-00	PIN, CONNECTOR 6P			
♠ CNP951	1-560-061-00	PIN, CONNECTOR 3P			
♠ CNP952	1-560-060-41	PIN, CONNECTOR 2P			
♠ CNP991	1-560-060-00	PIN, CONNECTOR 2P			
♠ CNP992	1-560-061-31	PIN, CONNECTOR 3P			
CP901	1-464-239-00	OSCILLATION UNIT, BIAS			
⚠CP951	1-161-744-00	CERAMIC	0.01MF		400V
CT101	1-141-069-XX	CAP, TRIMMER, (PRINT TYPE)			
CT301	1-141-069-XX	CAP, TRIMMER, (PRINT TYPE)			
D01	8-719-910-29	DIODE HZ12C3L			
D02	8-719-815-55	DIODE 1S1555			
D03	8-719-815-55	DIODE 1S1555			
D04	8-719-910-64	DIODE HZ6B1L			
D05	8-719-910-29	DIODE HZ12C3L			
D06	8-719-910-29	DIODE HZ12C3L			
D101	8-719-201-11	DIODE 10YG1.1			
D102	8-719-910-64	DIODE HZ6B1L			
D103	8-719-815-55	DIODE 1S1555			
D104	8-719-815-55	DIODE 1S1555			
D105	8-719-815-55	DIODE 1S1555			
D106	8-719-815-55	DIODE 1S1555			

ELECTRICAL PARTS

Ref.No.	Part No.	Description
D107	8-719-815-55	DIODE 1S1555
D108	8-719-815-55	DIODE 1S1555
D109	8-719-815-55	DIODE 1S1555
D110	8-719-815-55	DIODE 1S1555
D111	8-719-815-55	DIODE 1S1555
D301	8-719-201-11	DIODE 10YG1.1
D302	8-719-910-64	DIODE HZ6B1L
D303	8-719-815-55	DIODE 1S1555
D304	8-719-815-55	DIODE 1S1555
D305	8-719-815-55	DIODE 1S1555
D306	8-719-815-55	DIODE 1S1555
D307	8-719-815-55	DIODE 1S1555
D308	8-719-815-55	DIODE 1S1555
D309	8-719-815-55	DIODE 1S1555
D310	8-719-815-55	DIODE 1S1555
D311	8-719-815-55	DIODE 1S1555
D501	8-719-201-11	DIODE 10YG1.1
D502	8-719-910-64	DIODE HZ6B1L
D503	8-719-201-11	DIODE 10YG1.1
D504	8-719-910-64	DIODE HZ6B1L
D505	8-719-815-55	DIODE 1S1555
D506	8-719-815-55	DIODE 1S1555
D507	8-719-815-55	DIODE 1S1555
D508	8-719-815-55	DIODE 1S1555
D509	8-719-815-55	DIODE 1S1555
D510	8-719-815-55	DIODE 1S1555
D511	8-719-815-55	DIODE 1S1555
D512	8-719-815-55	DIODE 1S1555
D513	8-719-815-55	DIODE 1S1555
D514	8-719-815-55	DIODE 1S1555
D515	8-719-815-55	DIODE 1S1555
D516	8-719-815-55	DIODE 1S1555
D517	8-719-815-55	DIODE 1S1555
D518	8-719-815-55	DIODE 1S1555
D519	8-719-815-55	DIODE 1S1555
D522	8-719-815-55	DIODE 1S1555
D523	8-719-815-55	DIODE 1S1555
D524	8-719-815-55	DIODE 1S1555
D525	8-719-815-55	DIODE 1S1555
D526	8-719-815-55	DIODE 1S1555
D527	8-719-815-55	DIODE 1S1555
D528	8-719-815-55	DIODE 1S1555
D529	8-719-815-55	DIODE 1S1555
D530	8-719-815-55	DIODE 1S1555
D531	8-719-815-55	DIODE 1S1555

NOTE:
- Items with no part number and no description are not stocked because they are seldom required for routine service.
- Items marked " ♠ " are not stocked since thev are seldom required for routine service. Some delay should be anticipated when ordering these items.
- Due to standardization, parts with part numbers (Δ-ΔΔΔ-ΔΔΔ-XX or Δ-ΔΔΔΔ-ΔΔΔ-X) may be different from those used in the set.

CAPACITORS:
- All capacitors are in μF. Common capacitors are omitted. Refer to the following lists for their part numbers. MF:μF, PF:μμF.

RESISTORS
- All resistors are in ohms. Common 1/4W, 1/8W and 1/16W carbon resistors are omitted. Refer to the following lists for their part numbers.
- F : nonflammable

COILS
- MMH : mH, UH : μH

The components identified by shading and mark ⚠ are critical for safety. Replace only with part number specified.

SEMICONDUCTORS
In each case, U : μ, for example:
UA···: μA···, UPA···: μPA···, UPC···: μPC, UPD···: μPD···

ELECTRICAL PARTS

Ref.No.	Part No.	Description
D532	8-719-815-55	DIODE 1S1555
D533	8-719-815-55	DIODE 1S1555
D534	8-719-815-55	DIODE 1S1555
D535	8-719-815-55	DIODE 1S1555
D536	8-719-815-55	DIODE 1S1555
D537	8-719-910-02	DIODE HZ20-2L
D538	8-719-910-64	DIODE HZ6B1L
D539	8-719-815-55	DIODE 1S1555
D540	8-719-815-55	DIODE 1S1555
D541	8-719-815-55	DIODE 1S1555
D542	8-719-815-55	DIODE 1S1555
D543	8-719-815-55	DIODE 1S1555
D544	8-719-815-55	DIODE 1S1555
D545	8-719-910-02	DIODE HZ20-2L
D546	8-719-910-02	DIODE HZ20-2L
D547	8-719-910-02	DIODE HZ20-2L
D548	8-719-910-02	DIODE HZ20-2L
D601	8-719-815-55	DIODE 1S1555
D602	8-719-815-55	DIODE 1S1555
D701	8-719-815-55	DIODE 1S1555
D702	8-719-815-55	DIODE 1S1555
D703	8-719-815-55	DIODE 1S1555
D704	8-719-815-55	DIODE 1S1555
D705	8-719-815-55	DIODE 1S1555
D706	8-719-815-55	DIODE 1S1555
D707	8-719-910-64	DIODE HZ6B1L
D751	8-719-910-64	DIODE HZ6B1L
D801	8-719-815-55	DIODE 1S1555
D802	8-719-910-25	DIODE HZ12B1L
D803	8-719-815-55	DIODE 1S1555
D804	8-719-910-25	DIODE HZ12B1L
D805	8-719-200-02	DIODE 10E-2
D806	8-719-200-02	DIODE 10E-2
D807	8-719-200-02	DIODE 10E-2
D808	8-719-815-55	DIODE 1S1555
D809	8-719-815-55	DIODE 1S1555
D810	8-719-815-55	DIODE 1S1555
D811	8-719-815-55	DIODE 1S1555
D812	8-719-910-25	DIODE HZ12B1L
D813	8-719-910-53	DIODE HZ15-3L
D814	8-719-910-25	DIODE HZ12B1L
D815	8-719-910-25	DIODE HZ12B1L
D816	8-719-910-25	DIODE HZ12B1L
D817	8-719-200-02	DIODE 10E-2
D818	8-719-815-55	DIODE 1S1555

ELECTRICAL PARTS

Ref.No.	Part No.	Description
D819	8-719-815-55	DIODE 1S1555
D820	8-719-815-55	DIODE 1S1555
D851	8-719-955-25	DIODE PY5525S
D852	8-719-952-52	DIODE PG5525SX
D853	8-719-955-25	DIODE PY5525S
D854	8-719-952-53	DIODE BR5525S
D855	8-719-952-51	DIODE AA5525S
D951	8-719-200-02	DIODE 10E-2
D952	8-719-200-02	DIODE 10E-2
D953	8-719-200-02	DIODE 10E-2
D954	8-719-200-02	DIODE 10E-2
D955	8-719-200-02	DIODE 10E-2
D956	8-719-200-02	DIODE 10E-2
D957	8-719-200-02	DIODE 10E-2
D958	8-719-200-02	DIODE 10E-2
D959	8-719-200-02	DIODE 10E-2
D960	8-719-910-29	DIODE HZ12C3L
D961	8-719-922-71	DIODE HZ27-1L
D962	8-719-910-64	DIODE HZ6B1L
D963	8-719-910-64	DIODE HZ6B1L
D964	8-719-990-00	DIODE HZ12A1L
D991	8-719-230-02	DIODE 30DF2-FA
D992	8-719-230-02	DIODE 30DF2-FA
D993	8-719-230-02	DIODE 30DF2-FA
D994	8-719-230-02	DIODE 30DF2-FA
D995	8-719-931-06	DIODE EQB01-06
F1	⚠.1-532-203-00	FUSE, TIME-LAG
F2	⚠.1-532-203-00	FUSE, TIME-LAG
F3	⚠.1-532-203-00	FUSE, TIME-LAG
F4	⚠.1-532-203-00	FUSE, TIME-LAG
HE	8-825-535-30	HEAD, ERASE (ES237-36A)
HRP	8-825-500-40	HEAD, REC /PB
IC01	8-759-150-47	IC UPD550C-047
IC02	8-759-993-57	IC MSL9357RS
IC03	8-759-993-58	IC MSL9358RS
IC101	8-759-905-42	IC NE5534P
IC102	8-759-900-72	IC NE5532P
IC103	8-759-900-72	IC NE5532P
IC104	8-752-008-80	IC CX20088
IC105	8-752-008-70	IC CX20087
IC106	8-759-145-58	IC UPC4558C
IC301	8-759-905-42	IC NE5534P
IC302	8-759-900-72	IC NE5532P
IC303	8-759-900-72	IC NE5532P

NOTE:
- Items with no part number and no description are not stocked because they are seldom required for routine service.
- Items marked " ♦ " are not stocked since they are seldom required for routine service. Some delay should be anticipated when ordering these items.
- Due to standardization, parts with part numbers (Δ-ΔΔΔ-ΔΔΔ-XX or Δ-ΔΔΔΔ-ΔΔΔ-X) may be different from those used in the set.

CAPACITORS:
- All capacitors are in μF. Common capacitors are omitted. Refer to the following lists for their part numbers. MF:μF, PF:μμF.

RESISTORS
- All resistors are in ohms. Common 1/4W, 1/8W and 1/16W carbon resistors are omitted. Refer to the following lists for their part numbers.
- F : nonflammable

COILS
- MMH : mH, UH : μH

The components identified by shading and mark ⚠ are critical for safety. Replace only with part number specified.

SEMICONDUCTORS
In each case, U : μ, for example:
UA···: μA···, UPA···: μPA···, UPC···: μPC,
UPD···: μPD···

ELECTRICAL PARTS

Ref.No.	Part No.	Description
IC304	8-752-008-70	IC CX20087
IC305	8-752-008-80	IC CX20088
IC306	8-759-145-58	IC UPC4558C
IC501	8-759-145-58	IC UPC4558C
IC502	8-759-145-58	IC UPC4558C
IC503	8-759-900-72	IC NE5532P
IC504	8-759-745-60	IC NJM4560D
IC505	8-759-145-58	IC UPC4558C
IC506	8-759-745-60	IC NJM4560D
IC601	8-759-145-58	IC UPC4558C
IC602	8-759-108-05	IC UPC78L05A
IC603	8-751-930-00	IC CX-193
IC604	8-759-145-58	IC UPC4558C
IC605	8-759-145-58	IC UPC4558C
IC701	8-759-145-58	IC UPC4558C
IC702	8-759-145-58	IC UPC4558C
IC703	8-759-145-58	IC UPC4558C
IC801	8-759-170-93	IC UPD547C-093
IC802	8-759-145-58	IC UPC4558C
IC803	8-759-145-58	IC UPC4558C
IC804	8-759-984-69	IC MB84069UB
IC805	8-759-133-90	IC UPC339C
IC806	8-759-145-58	IC UPC4558C
L01	1-408-096-00	MICRO INDUCTOR 470UH
L101	1-407-240-00	MICRO INDUCTOR 22MMH
L102	1-408-259-00	MICRO INDUCTOR 15MMH
L103	1-408-261-00	MICRO INDUCTOR 22MMH
L104	1-408-262-00	MICRO INDUCTOR 27MMH
L105	1-407-240-00	MICRO INDUCTOR 22MMH
L106	1-408-261-00	MICRO INDUCTOR 22MMH
L107	1-408-254-21	MICRO INDUCTOR 5.6MMH
L108	1-408-250-21	MICRO INDUCTOR 2.7MMH
L109	1-408-685-00	MICRO INDUCTOR 1.8MMH
L110	1-408-249-21	MICRO INDUCTOR 2.2MMH
L301	1-407-240-00	MICRO INDUCTOR 22MMH
L302	1-408-259-00	MICRO INDUCTOR 15MMH
L303	1-408-261-00	MICRO INDUCTOR 22MMH
L304	1-408-262-00	MICRO INDUCTOR 27MMH
L305	1-407-240-00	MICRO INDUCTOR 22MMH
L306	1-408-261-00	MICRO INDUCTOR 22MMH
L307	1-408-251-21	MICRO INDUCTOR 3.3MMH
L308	1-408-250-21	MICRO INDUCTOR 2.7MMH
L309	1-408-685-00	MICRO INDUCTOR 1.8MMH
L310	1-408-249-21	MICRO INDUCTOR 2.2MMH
L801	1-408-096-00	MICRO INDUCTOR 470UH

ELECTRICAL PARTS

Ref.No.	Part No.	Description
PL101	1-518-386-00	LAMP, PILOT
PL301	1-518-386-00	LAMP, PILOT
PL901	1-518-306-00	LAMP, PILOT
PM1	1-454-270-00	SOLENOID, PLUNGER
PM2	1-454-271-00	SOLENOID, PLUNGER
PM3	1-454-345-00	SOLENOID, PLUNGER
PT901⚠	1-447-002-00	TRANSFORMER, POWER
Q01	8-729-902-11	TRANSISTOR 2SC2021
Q02	8-729-902-11	TRANSISTOR 2SC2021
Q03	8-729-101-31	TRANSISTOR N13T1
Q04	8-729-902-11	TRANSISTOR 2SC2021
Q05	8-729-993-72	TRANSISTOR 2SA937
Q06	8-729-902-11	TRANSISTOR 2SC2021
Q07	8-729-993-72	TRANSISTOR 2SA937
Q101	8-765-660-10	TRANSISTOR 2SK245
Q102	8-765-450-20	TRANSISTOR 2SK125
Q103	8-765-450-20	TRANSISTOR 2SK125
Q104	8-729-300-62	TRANSISTOR 2SD666A
Q105	8-729-113-82	TRANSISTOR 2SA1138
Q106	8-729-113-82	TRANSISTOR 2SA1138
Q107	8-729-167-62	TRANSISTOR 2SC2676
Q108	8-729-167-62	TRANSISTOR 2SC2676
Q109	8-729-300-62	TRANSISTOR 2SD666A
Q110	8-729-304-62	TRANSISTOR 2SB646A
Q111	8-729-663-47	TRANSISTOR 2SC1364
Q112	8-729-663-47	TRANSISTOR 2SC1364
Q113	8-729-663-47	TRANSISTOR 2SC1364
Q301	8-765-660-10	TRANSISTOR 2SK245
Q302	8-765-450-20	TRANSISTOR 2SK125
Q303	8-765-450-20	TRANSISTOR 2SK125
Q304	8-729-300-62	TRANSISTOR 2SD666A
Q305	8-729-113-82	TRANSISTOR 2SA1138
Q306	8-729-113-82	TRANSISTOR 2SA1138
Q307	8-729-167-62	TRANSISTOR 2SC2676
Q308	8-729-167-62	TRANSISTOR 2SC2676
Q309	8-729-300-62	TRANSISTOR 2SD666A
Q310	8-729-304-62	TRANSISTOR 2SB646A
Q311	8-729-663-47	TRANSISTOR 2SC1364
Q312	8-729-663-47	TRANSISTOR 2SC1364
Q313	8-729-663-47	TRANSISTOR 2SC1364
Q501	8-729-113-82	TRANSISTOR 2SA1138
Q502	8-729-167-62	TRANSISTOR 2SC2676
Q503	8-729-167-62	TRANSISTOR 2SC2676
Q504	8-729-141-43	TRANSISTOR 2SD414
Q505	8-729-167-62	TRANSISTOR 2SC2676
Q506	8-729-113-82	TRANSISTOR 2SA1138

NOTE:
- Items with no part number and no description are not stocked because they are seldom required for routine service.
- Items marked " ♦ " are not stocked since they are seldom required for routine service. Some delay should be anticipated when ordering these items.
- Due to standardization, parts with part numbers (Δ-ΔΔΔ-ΔΔΔ-XX or Δ-ΔΔΔΔ-ΔΔΔ-X) may be different from those used in the set.

CAPACITORS:
- All capacitors are in μF. Common capacitors are omitted. Refer to the following lists for their part numbers. MF:μF, PF:μμF.

RESISTORS
- All resistors are in ohms. Common 1/4W, 1/8W and 1/16W carbon resistors are omitted. Refer to the following lists for their part numbers.
- F : nonflammable

COILS
- MMH : mH, UH : μH

The components identified by shading and mark ⚠ are critical for safety. Replace only with part number specified.

SEMICONDUCTORS
In each case, U : μ, for example:
UA···: μA···, UPA···: μPA···, UPC···: μPC,
UPD···: μPD···

ELECTRICAL PARTS

Ref.No.	Part No.	Description
Q507	8-729-113-82	TRANSISTOR 2SA1138
Q508	8-729-154-83	TRANSISTOR 2SB548-Q
Q509	8-729-663-47	TRANSISTOR 2SC1364
Q510	8-729-201-52	TRANSISTOR 2SA1015
Q511	8-729-663-47	TRANSISTOR 2SC1364
Q512	8-729-663-47	TRANSISTOR 2SC1364
Q513	8-729-663-47	TRANSISTOR 2SC1364
Q514	8-729-663-47	TRANSISTOR 2SC1364
Q515	8-729-663-47	TRANSISTOR 2SC1364
Q516	8-729-663-47	TRANSISTOR 2SC1364
Q517	8-729-663-47	TRANSISTOR 2SC1364
Q518	8-729-663-47	TRANSISTOR 2SC1364
Q519	8-729-663-47	TRANSISTOR 2SC1364
Q520	8-729-663-47	TRANSISTOR 2SC1364
Q521	8-729-663-47	TRANSISTOR 2SC1364
Q522	8-729-663-47	TRANSISTOR 2SC1364
Q523	8-729-201-52	TRANSISTOR 2SA1015
Q524	8-729-201-52	TRANSISTOR 2SA1015
Q525	8-729-201-52	TRANSISTOR 2SA1015
Q526	8-729-663-47	TRANSISTOR 2SC1364
Q527	8-729-663-47	TRANSISTOR 2SC1364
Q528	8-729-663-47	TRANSISTOR 2SC1364
Q529	8-729-663-47	TRANSISTOR 2SC1364
Q530	8-729-663-47	TRANSISTOR 2SC1364
Q601	8-729-663-48	TRANSISTOR 2SC1364-8
Q602	8-729-663-48	TRANSISTOR 2SC1364-8
Q603	8-729-180-93	TRANSISTOR 2SD809
Q604	8-729-173-13	TRANSISTOR 2SB731
Q605	8-729-180-93	TRANSISTOR 2SD809
Q606	8-729-173-13	TRANSISTOR 2SB731
Q701	8-729-663-48	TRANSISTOR 2SC1364-8
Q702	8-729-602-68	TRANSISTOR 2SA1026-8
Q703	8-729-663-48	TRANSISTOR 2SC1364-8
Q704	8-729-663-48	TRANSISTOR 2SC1364-8
Q705	8-729-663-48	TRANSISTOR 2SC1364-8
Q706	8-729-663-48	TRANSISTOR 2SC1364-8
Q707	8-729-180-93	TRANSISTOR 2SD809
Q708	8-729-173-13	TRANSISTOR 2SB731
Q709	8-729-180-93	TRANSISTOR 2SD809
Q710	8-729-173-13	TRANSISTOR 2SB731
Q751	8-729-180-93	TRANSISTOR 2SD809
Q752	8-729-663-48	TRANSISTOR 2SC1364-8
Q753	8-729-173-13	TRANSISTOR 2SB731
Q754	8-729-602-68	TRANSISTOR 2SA1026-8
Q801	8-729-663-47	TRANSISTOR 2SC1364

ELECTRICAL PARTS

Ref.No.	Part No.	Description
Q802	8-729-663-47	TRANSISTOR 2SC1364
Q803	8-729-663-47	TRANSISTOR 2SC1364
Q804	8-729-663-47	TRANSISTOR 2SC1364
Q805	8-729-663-47	TRANSISTOR 2SC1364
Q806	8-729-663-47	TRANSISTOR 2SC1364
Q807	8-729-663-47	TRANSISTOR 2SC1364
Q808	8-729-177-43	TRANSISTOR 2SD774
Q809	8-729-177-43	TRANSISTOR 2SD774
Q810	8-729-177-43	TRANSISTOR 2SD774
Q811	8-729-283-42	TRANSISTOR 2SB834
Q812	8-729-663-47	TRANSISTOR 2SC1364
Q813	8-729-663-47	TRANSISTOR 2SC1364
Q814	8-729-663-47	TRANSISTOR 2SC1364
Q815	8-729-663-47	TRANSISTOR 2SC1364
Q816	8-729-663-47	TRANSISTOR 2SC1364
Q817	8-729-663-47	TRANSISTOR 2SC1364
Q951	8-729-288-02	TRANSISTOR 2SD880
Q952	8-729-663-47	TRANSISTOR 2SC1364
Q953	8-729-663-47	TRANSISTOR 2SC1364
Q954	8-729-288-02	TRANSISTOR 2SD880
Q955	8-729-663-47	TRANSISTOR 2SC1364
Q956	8-729-288-02	TRANSISTOR 2SD880
Q957	8-729-288-02	TRANSISTOR 2SD880
Q958	8-729-663-47	TRANSISTOR 2SC1364
Q959	8-729-663-47	TRANSISTOR 2SC1364
Q960	8-729-288-02	TRANSISTOR 2SD880
Q961	8-729-663-47	TRANSISTOR 2SC1364
R01	1-247-863-00	CARBON 22K 5% 1/6W
R02	1-247-863-00	CARBON 22K 5% 1/6W
R03	1-247-871-00	CARBON 47K 5% 1/6W
R04	1-247-863-00	CARBON 22K 5% 1/6W
R05	1-247-881-00	CARBON 120K 5% 1/6W
R06	1-247-845-00	CARBON 3.9K 5% 1/6W
R07	1-247-815-00	CARBON 220 5% 1/6W
R08	1-247-855-00	CARBON 10K 5% 1/6W
R09	1-247-853-00	CARBON 8.2K 5% 1/6W
R10	1-247-879-00	CARBON 100K 5% 1/6W
R11	1-247-847-00	CARBON 4.7K 5% 1/6W
R12	1-247-855-00	CARBON 10K 5% 1/6W
R13	1-247-863-00	CARBON 22K 5% 1/6W
R14	1-247-847-00	CARBON 4.7K 5% 1/6W
R15	1-247-855-00	CARBON 10K 5% 1/6W
R16	1-247-863-00	CARBON 22K 5% 1/6W
R17	1-247-875-00	CARBON 68K 5% 1/6W
R18	1-247-875-00	CARBON 68K 5% 1/6W

ELECTRICAL PARTS

Ref.No.	Part No.	Description
R19	1-246-451-00	CARBON 120 5% 1/4W
R20	1-246-451-00	CARBON 120 5% 1/4W
R21	1-247-875-00	CARBON 68K 5% 1/6W
R22	1-247-875-00	CARBON 68K 5% 1/6W
R23	1-247-875-00	CARBON 68K 5% 1/6W
R101	1-214-913-00	METAL 100K 1% 1/2W
R102	1-214-726-00	METAL 750 1% 1/4W
R103	1-214-726-00	METAL 750 1% 1/4W
R104	1-214-096-00	METAL 33 1% 1/4W
R105	1-214-096-00	METAL 33 1% 1/4W
R106	1-214-723-00	METAL 560 1% 1/4W
R109	1-214-842-00	METAL 120 1% 1/2W
R110	1-214-915-00	METAL 120K 1% 1/2W
R111	1-214-879-00	METAL 4.3K 1% 1/2W
R112	1-214-882-00	METAL 5.6K 1% 1/2W
R113	1-214-739-00	METAL 2.7K 1% 1/4W
R114	1-214-757-00	METAL 15K 1% 1/4W
R115	1-214-740-00	METAL 3K 1% 1/4W
R116	1-214-745-00	METAL 4.7K 1% 1/4W
R117	1-214-745-00	METAL 4.7K 1% 1/4W
R118	1-214-697-00	METAL 47 1% 1/4W
R119	1-214-697-00	METAL 47 1% 1/4W
R120	1-214-705-00	METAL 100 1% 1/4W
R121	1-214-735-00	METAL 1K 1% 1/4W
R122	1-214-705-00	METAL 100 1% 1/4W
R123	1-214-858-00	METAL 560 1% 1/2W
R124	1-214-893-00	METAL 16K 1% 1/2W
R125	1-214-697-00	METAL 47 1% 1/4W
R126	1-214-769-00	METAL 47K 1% 1/4W
R127	1-214-868-00	METAL 1.5K 1% 1/2W
R128	1-214-868-00	METAL 1.5K 1% 1/2W
R129	1-214-901-00	METAL 33K 1% 1/2W
R130	1-214-885-00	METAL 7.5K 1% 1/2W
R131	1-214-777-00	METAL 100K 1% 1/4W
R132	1-214-856-00	METAL 470 1% 1/2W
R133	1-214-888-00	METAL 10K 1% 1/2W
R134	1-214-697-00	METAL 47 1% 1/4W
R135	1-247-863-00	CARBON 22K 5% 1/6W
R136	1-214-733-00	METAL 1.5K 1% 1/4W
R137	1-214-777-00	METAL 100K 1% 1/4W
R138	1-214-890-00	METAL 12K 1% 1/2W
R139	1-214-899-00	METAL 27K 1% 1/2W
R140	1-214-761-00	METAL 22K 1% 1/4W
R141	1-214-737-00	METAL 2.2K 1% 1/4W
R142	1-214-705-00	METAL 100 1% 1/4W

ELECTRICAL PARTS

Ref.No.	Part No.	Description
R143	1-214-881-00	METAL 5.1K 1% 1/2W
R144	1-214-743-00	METAL 3.9K 1% 1/4W
R145	1-214-777-00	METAL 100K 1% 1/4W
R146	1-214-882-00	METAL 7.5K 1% 1/2W
R147	1-214-894-00	METAL 18K 1% 1/2W
R148	1-214-874-00	METAL 2.7K 1% 1/2W
R149	1-246-513-00	CARBON 47K 5% 1/4W
R150	1-246-433-00	CARBON 22 5% 1/4W
R151	1-246-465-00	CARBON 470 5% 1/4W
R152	1-246-457-00	CARBON 220 5% 1/4W
R153	1-214-761-00	METAL 22K 1% 1/4W
R154	1-214-761-00	METAL 22K 1% 1/4W
R155	1-246-521-00	CARBON 100K 5% 1/4W
R156	1-246-457-00	CARBON 220 5% 1/4W
R157	1-246-505-00	CARBON 22K 5% 1/4W
R159	1-246-487-00	CARBON 3.9K 5% 1/4W
R160	1-246-467-00	CARBON 560 5% 1/4W
R171	1-214-705-00	METAL 100 1% 1/4W
R172	1-214-777-00	METAL 100K 1% 1/4W
R173	1-214-863-00	METAL 910 1% 1/2W
R174	1-214-889-00	METAL 11K 1% 1/2W
R175	1-214-744-00	METAL 4.3K 1% 1/4W
R176	1-214-741-00	METAL 3.3K 1% 1/4W
R177	1-214-956-00	METAL 470K 1% 1/4W
R178	1-214-723-00	METAL 560 1% 1/4W
R179	1-214-776-00	METAL 91K 1% 1/4W
R180	1-214-736-00	METAL 2K 1% 1/4W
R181	1-214-769-00	METAL 47K 1% 1/4W
R182	1-214-746-00	METAL 5.1K 1% 1/4W
R183	1-214-786-00	METAL 240K 1% 1/4W
R184	1-214-783-00	METAL 180K 1% 1/4W
R185	1-214-743-00	METAL 3.9K 1% 1/4W
R186	1-214-786-00	METAL 240K 1% 1/4W
R187	1-214-783-00	METAL 180K 1% 1/4W
R188	1-214-718-00	METAL 360 1% 1/4W
R189	1-214-743-00	METAL 3.9K 1% 1/4W
R190	1-214-705-00	METAL 100 1% 1/4W
R191	1-214-769-00	METAL 47K 1% 1/4W
R192	1-214-705-00	METAL 100 1% 1/4W
R193	1-214-749-00	METAL 6.8K 1% 1/4W
R194	1-214-741-00	METAL 3.3K 1% 1/4W
R195	1-214-741-00	METAL 3.3K 1% 1/4W
R196	1-214-777-00	METAL 100K 1% 1/4W
R197	1-214-749-00	METAL 6.8K 1% 1/4W
R198	1-214-705-00	METAL 100 1% 1/4W

NOTE:
- Items with no part number and no description are not stocked because they are seldom required for routine service.
- Items marked " ♦ " are not stocked since thev are seldom required for routine service. Some delay should be anticipated when ordering these items.
- Due to standardization, parts with part numbers (Δ-ΔΔΔ-ΔΔΔ-XX or Δ-ΔΔΔΔ-ΔΔΔ-X) may be different from those used in the set.

CAPACITORS:
- All capacitors are in μF. Common capacitors are omitted. Refer to the following lists for their part numbers. MF:μF, PF:μμF.

RESISTORS
- All resistors are in ohms. Common 1/4W, 1/8W and 1/16W carbon resistors are omitted. Refer to the following lists for their part numbers.
- F : nonflammable

COILS
- MMH : mH, UH : μH

The components identified by shading and mark ⚠ are critical for safety. Replace only with part number specified.

SEMICONDUCTORS
In each case, U : μ, for example:
UA···: μA···, UPA···: μPA···, UPC···: μPC,
UPD···: μPD···

NOTE:
- Items with no part number and no description are not stocked because they are seldom required for routine service.
- Items marked " ♦ " are not stocked since thev are seldom required for routine service. Some delay should be anticipated when ordering these items.
- Due to standardization, parts with part numbers (Δ-ΔΔΔ-ΔΔΔ-XX or Δ-ΔΔΔΔ-ΔΔΔ-X) may be different from those used in the set.

CAPACITORS:
- All capacitors are in μF. Common capacitors are omitted. Refer to the following lists for their part numbers. MF:μF, PF:μμF.

RESISTORS
- All resistors are in ohms. Common 1/4W, 1/8W and 1/16W carbon resistors are omitted. Refer to the following lists for their part numbers.
- F : nonflammable

COILS
- MMH : mH, UH : μH

The components identified by shading and mark ⚠ are critical for safety. Replace only with part number specified.

SEMICONDUCTORS
In each case, U : μ, for example:
UA···: μA···, UPA···: μPA···, UPC···: μPC,
UPD···: μPD···

ELECTRICAL PARTS

Ref.No.	Part No.	Description			
R199	1-214-769-00	METAL	47K	1%	1/4W
R200	1-214-856-00	METAL	470	1%	1/2W
R201	1-214-888-00	METAL	10K	1%	1/2W
R202	1-214-744-00	METAL	4.3K	1%	1/4W
R203	1-214-741-00	METAL	3.3K	1%	1/4W
R204	1-214-956-00	METAL	470K	1%	1/4W
R205	1-214-723-00	METAL	560	1%	1/4W
R206	1-214-776-00	METAL	91K	1%	1/4W
R207	1-214-736-00	METAL	2K	1%	1/4W
R208	1-214-769-00	METAL	47K	1%	1/4W
R209	1-214-746-00	METAL	5.1K	1%	1/4W
R210	1-214-786-00	METAL	240K	1%	1/4W
R211	1-214-783-00	METAL	180K	1%	1/4W
R212	1-214-743-00	METAL	3.9K	1%	1/4W
R213	1-214-786-00	METAL	240K	1%	1/4W
R214	1-214-783-00	METAL	180K	1%	1/4W
R215	1-214-718-00	METAL	360	1%	1/4W
R216	1-214-743-00	METAL	3.9K	1%	1/4W
R217	1-214-763-00	METAL	27K	1%	1/4W
R218	1-214-745-00	METAL	4.7K	1%	1/4W
R221	1-214-745-00	METAL	4.7K	1%	1/4W
R222	1-214-744-00	METAL	4.3K	1%	1/4W
R223	1-214-747-00	METAL	5.6K	1%	1/4W
R224	1-214-743-00	METAL	3.9K	1%	1/4W
R225	1-214-731-00	METAL	1.2K	1%	1/4W
R226	1-214-761-00	METAL	22K	1%	1/4W
R227	1-214-761-00	METAL	22K	1%	1/4W
R228	1-214-773-00	METAL	68K	1%	1/4W
R229	1-214-713-00	METAL	220	1%	1/4W
R230	1-214-761-00	METAL	22K	1%	1/4W
R231	1-247-847-00	CARBON	4.7K	5%	1/6W
R232	1-247-847-00	CARBON	4.7K	5%	1/6W
R233	1-247-883-00	CARBON	150K	5%	1/6W
R234	1-247-823-00	CARBON	470	5%	1/6W
R235	1-247-841-00	CARBON	2.7K	5%	1/6W
R236	1-247-826-00	CARBON	620	5%	1/6W
R237	1-247-817-00	CARBON	270	5%	1/6W
R238	1-247-831-00	CARBON	1K	5%	1/6W
R239	1-214-713-00	METAL	220	1%	1/4W
R240	1-214-890-00	METAL	12K	1%	1/4W
R241	1-214-708-00	METAL	120	1%	1/4W
R242	1-214-745-00	METAL	4.7K	1%	1/4W
R243	1-214-741-00	METAL	3.3K	1%	1/4W
R244	1-214-709-00	METAL	150	1%	1/4W
R245	1-214-787-00	METAL	270K	1%	1/4W

ELECTRICAL PARTS

Ref.No.	Part No.	Description			
R246	1-214-733-00	METAL	1.2K	1%	1/4W
R247	1-214-705-00	METAL	100	1%	1/4W
R248	1-214-739-00	METAL	2.7K	1%	1/4W
R249	1-214-739-00	METAL	2.7K	1%	1/4W
R251	1-247-847-00	CARBON	4.7K	5%	1/6W
R252	1-247-879-00	CARBON	100K	5%	1/6W
R253	1-214-761-00	METAL	22K	1%	1/4W
R254	1-247-893-00	CARBON	390K	5%	1/6W
R255	1-247-871-00	CARBON	47K	5%	1/6W
R256	1-247-855-00	CARBON	10K	5%	1/6W
R257	1-247-847-00	CARBON	4.7K	5%	1/6W
R258	1-247-879-00	CARBON	100K	5%	1/6W
R259	1-247-871-00	CARBON	47K	5%	1/6W
R260	1-247-879-00	CARBON	100K	5%	1/6W
R261	1-247-855-00	CARBON	10K	5%	1/6W
R262	1-247-855-00	CARBON	10K	5%	1/6W
R263	1-247-853-00	CARBON	8.2K	5%	1/6W
R264	1-247-831-00	CARBON	1K	5%	1/6W
R501	1-214-723-00	METAL	560	1%	1/4W
R502	1-214-769-00	METAL	47K	1%	1/4W
R503	1-214-731-00	METAL	1.2K	1%	1/4W
R504	1-214-739-00	METAL	2.7K	1%	1/4W
R505	1-214-858-00	METAL	560	1%	1/2W
R506	1-214-864-00	METAL	1K	1%	1/2W
R507	1-214-723-00	METAL	560	1%	1/4W
R508	1-214-769-00	METAL	47K	1%	1/4W
R509	1-214-731-00	METAL	1.2K	1%	1/4W
R510	1-214-739-00	METAL	2.7K	1%	1/4W
R511	1-214-858-00	METAL	560	1%	1/2W
R512	1-214-864-00	METAL	1K	1%	1/2W
R513	1-246-513-00	CARBON	47K	5%	1/4W
R514	1-246-513-00	CARBON	47K	5%	1/4W
R515	1-246-513-00	CARBON	47K	5%	1/4W
R516	1-246-513-00	CARBON	47K	5%	1/4W
R517	1-214-742-00	METAL	3.6K	1%	1/4W
R518	1-246-425-00	CARBON	10	5%	1/4W
R519	1-246-425-00	CARBON	10	5%	1/4W
R521	1-246-503-00	CARBON	18K	5%	1/4W
R522	1-246-503-00	CARBON	18K	5%	1/4W
R523	1-246-498-00	CARBON	11K	5%	1/4W
R524	1-246-498-00	CARBON	11K	5%	1/4W
R525	1-246-525-00	CARBON	150K	5%	1/4W
R526	1-246-525-00	CARBON	150K	5%	1/4W
R527	1-246-527-00	CARBON	180K	5%	1/4W
R528	1-246-513-00	CARBON	47K	5%	1/4W

ELECTRICAL PARTS

Ref.No.	Part No.	Description			
R529	1-246-503-00	CARBON	18K	5%	1/4W
R530	1-246-513-00	CARBON	47K	5%	1/4W
R531	1-246-503-00	CARBON	18K	5%	1/4W
R532	1-246-513-00	CARBON	47K	5%	1/4W
R533	1-246-497-00	CARBON	10K	5%	1/4W
R534	1-246-513-00	CARBON	47K	5%	1/4W
R535	1-246-503-00	CARBON	18K	5%	1/4W
R536	1-246-449-00	CARBON	100	5%	1/4W
R537	1-246-513-00	CARBON	47K	5%	1/4W
R538	1-246-505-00	CARBON	22K	5%	1/4W
R541	1-214-763-00	METAL	27K	1%	1/4W
R542	1-246-505-00	CARBON	22K	5%	1/4W
R543	1-246-485-00	CARBON	3.3K	5%	1/4W
R544	1-246-497-00	CARBON	10K	5%	1/4W
R545	1-246-513-00	CARBON	47K	5%	1/4W
R546	1-246-487-00	CARBON	3.9K	5%	1/4W
R547	1-246-495-00	CARBON	8.2K	5%	1/4W
R548	1-246-513-00	CARBON	47K	5%	1/4W
R549	1-246-497-00	CARBON	10K	5%	1/4W
R550	1-246-513-00	CARBON	47K	5%	1/4W
R551	1-246-513-00	CARBON	47K	5%	1/4W
R552	1-246-513-00	CARBON	47K	5%	1/4W
R553	1-246-513-00	CARBON	47K	5%	1/4W
R554	1-246-513-00	CARBON	47K	5%	1/4W
R555	1-246-513-00	CARBON	47K	5%	1/4W
R556	1-246-513-00	CARBON	47K	5%	1/4W
R557	1-246-513-00	CARBON	47K	5%	1/4W
R561	1-247-799-00	CARBON	47	5%	1/6W
R562	1-247-799-00	CARBON	47	5%	1/6W
R563	1-214-697-00	METAL	47	1%	1/4W
R564	1-214-697-00	METAL	47	1%	1/4W
R565	1-247-861-00	CARBON	18K	5%	1/6W
R566	1-247-841-00	CARBON	2.7K	5%	1/6W
R567	1-247-847-00	CARBON	4.7K	5%	1/6W
R568	1-247-867-00	CARBON	33K	5%	1/6W
R569	1-247-875-00	CARBON	68K	5%	1/6W
R570	1-247-875-00	CARBON	68K	5%	1/6W
R571	1-247-855-00	CARBON	10K	5%	1/6W
R572	1-247-847-00	CARBON	4.7K	5%	1/6W
R573	1-247-867-00	CARBON	33K	5%	1/6W
R574	1-247-875-00	CARBON	68K	5%	1/6W
R575	1-247-875-00	CARBON	68K	5%	1/6W
R576	1-247-855-00	CARBON	10K	5%	1/6W
R577	1-247-847-00	CARBON	4.7K	5%	1/6W
R578	1-247-867-00	CARBON	33K	5%	1/6W

ELECTRICAL PARTS

Ref.No.	Part No.	Description			
R579	1-247-875-00	CARBON	68K	5%	1/6W
R580	1-247-875-00	CARBON	68K	5%	1/6W
R581	1-247-855-00	CARBON	10K	5%	1/6W
R582	1-214-747-00	METAL	5.6K	1%	1/4W
R583	1-214-740-00	METAL	3K	1%	1/4W
R584	1-214-744-00	METAL	4.3K	1%	1/4W
R585	1-214-731-00	METAL	1.2K	1%	1/4W
R586	1-247-837-00	CARBON	1.8K	5%	1/6W
R587	1-247-845-00	CARBON	3.9K	5%	1/6W
R588	1-247-863-00	CARBON	22K	5%	1/6W
R589	1-247-871-00	CARBON	47K	5%	1/6W
R590	1-247-855-00	CARBON	10K	5%	1/6W
R591	1-247-863-00	CARBON	22K	5%	1/6W
R592	1-247-855-00	CARBON	10K	5%	1/6W
R593	1-247-855-00	CARBON	10K	5%	1/6W
R594	1-247-871-00	CARBON	47K	5%	1/6W
R595	1-247-831-00	CARBON	1K	5%	1/6W
R596	1-247-831-00	CARBON	1K	5%	1/6W
R597	1-247-831-00	CARBON	1K	5%	1/6W
R598	1-247-831-00	CARBON	1K	5%	1/6W
R599	1-214-154-00	METAL	8.2K	1%	1/4W
R601	1-246-473-00	CARBON	1K	5%	1/4W
R602	1-246-473-00	CARBON	1K	5%	1/4W
R603	1-246-521-00	CARBON	100K	5%	1/4W
R604	1-246-473-00	CARBON	1K	5%	1/4W
R605	1-246-492-00	CARBON	6.2K	5%	1/4W
R606	1-246-499-00	CARBON	12K	5%	1/4W
R608	1-246-485-00	CARBON	3.3K	5%	1/4W
R609	1-214-780-00	METAL	130K	1%	1/4W
R610	1-214-753-00	METAL	10K	1%	1/4W
R611	1-214-753-00	METAL	10K	1%	1/4W
R612	1-246-533-00	CARBON	330K	5%	1/4W
R613	1-246-497-00	CARBON	10K	5%	1/4W
R614	1-246-501-00	CARBON	15K	5%	1/4W
R615	1-246-501-00	CARBON	15K	5%	1/4W
R616	1-246-511-00	CARBON	39K	5%	1/4W
R617	1-246-511-00	CARBON	39K	5%	1/4W
R618	1-246-497-00	CARBON	10K	5%	1/4W
R619	1-214-741-00	METAL	3.3K	1%	1/4W
R620	1-214-743-00	METAL	3.9K	1%	1/4W
R621	1-246-477-00	CARBON	1.5K	5%	1/4W
R622	1-214-769-00	METAL	47K	1%	1/4W
R623	1-214-769-00	METAL	47K	1%	1/4W
R624	1-246-473-00	CARBON	1K	5%	1/4W
R625	1-246-521-00	CARBON	100K	5%	1/4W

NOTE:
- Items with no part number and no description are not stocked because they are seldom required for routine service.
- Items marked " ♦ " are not stocked since they are seldom required for routine service. Some delay should be anticipated when ordering these items.
- Due to standardization, parts with part numbers (Δ-ΔΔΔ-ΔΔΔ-XX or Δ-ΔΔΔΔ-ΔΔΔ-X) may be different from those used in the set.

CAPACITORS:
- All capacitors are in μF. Common capacitors are omitted. Refer to the following lists for their part numbers. MF:μF, PF:μμF.

RESISTORS
- All resistors are in ohms. Common 1/4W, 1/8W and 1/16W carbon resistors are omitted. Refer to the following lists for their part numbers.
- F : nonflammable

COILS
- MMH : mH, UH : μH

The components identified by shading and mark ⚠ are critical for safety. Replace only with part number specified.

SEMICONDUCTORS
In each case, U : μ, for example:
UA···: μA···, UPA···: μPA···, UPC···: μPC,
UPD···: μPD···

NOTE:
- Items with no part number and no description are not stocked because they are seldom required for routine service.
- Items marked " ♦ " are not stocked since they are seldom required for routine service. Some delay should be anticipated when ordering these items.
- Due to standardization, parts with part numbers (Δ-ΔΔΔ-ΔΔΔ-XX or Δ-ΔΔΔΔ-ΔΔΔ-X) may be different from those used in the set.

CAPACITORS:
- All capacitors are in μF. Common capacitors are omitted. Refer to the following lists for their part numbers. MF:μF, PF:μμF.

RESISTORS
- All resistors are in ohms. Common 1/4W, 1/8W and 1/16W carbon resistors are omitted. Refer to the following lists for their part numbers.
- F : nonflammable

COILS
- MMH : mH, UH : μH

The components identified by shading and mark ⚠ are critical for safety. Replace only with part number specified.

SEMICONDUCTORS
In each case, U : μ, for example:
UA···: μA···, UPA···: μPA···, UPC···: μPC,
UPD···: μPD···

ELECTRICAL PARTS

Ref.No.	Part No.	Description			
R626	1-246-473-00	CARBON	1K	5%	1/4W
R627	1-246-505-00	CARBON	22K	5%	1/4W
R628	1-246-473-00	CARBON	1K	5%	1/4W
R629	1-246-505-00	CARBON	22K	5%	1/4W
R630	1-246-505-00	CARBON	22K	5%	1/4W
R631	1-246-449-00	CARBON	100	5%	1/4W
R632	1-246-469-00	CARBON	680	5%	1/4W
R633	1-246-469-00	CARBON	680	5%	1/4W
R634	1-246-539-00	CARBON	560K	5%	1/4W
R635	1-246-521-00	CARBON	100K	5%	1/4W
R636	1-246-449-00	CARBON	100	5%	1/4W
R637	1-246-473-00	CARBON	1K	5%	1/4W
R638	1-246-505-00	CARBON	22K	5%	1/4W
R639	1-246-505-00	CARBON	22K	5%	1/4W
R640	1-246-449-00	CARBON	100	5%	1/4W
R641	1-246-469-00	CARBON	680	5%	1/4W
R642	1-246-469-00	CARBON	680	5%	1/4W
R643	1-246-539-00	CARBON	560K	5%	1/4W
R644	1-246-521-00	CARBON	100K	5%	1/4W
R645	1-246-449-00	CARBON	100	5%	1/4W
R701	1-246-497-00	CARBON	10K	5%	1/4W
R702	1-246-497-00	CARBON	10K	5%	1/4W
R703	1-246-473-00	CARBON	1K	5%	1/4W
R704	1-246-497-00	CARBON	10K	5%	1/4W
R705	1-246-497-00	CARBON	10K	5%	1/4W
R706	1-246-497-00	CARBON	10K	5%	1/4W
R707	1-246-497-00	CARBON	10K	5%	1/4W
R708	1-246-497-00	CARBON	10K	5%	1/4W
R709	1-246-497-00	CARBON	10K	5%	1/4W
R710	1-246-497-00	CARBON	10K	5%	1/4W
R711	1-246-473-00	CARBON	1K	5%	1/4W
R712	1-246-497-00	CARBON	10K	5%	1/4W
R713	1-246-489-00	CARBON	4.7K	5%	1/4W
R714	1-246-459-00	CARBON	270	5%	1/4W
R715	1-246-473-00	CARBON	1K	5%	1/4W
R716	1-246-497-00	CARBON	10K	5%	1/4W
R717	1-246-497-00	CARBON	10K	5%	1/4W
R718	1-246-485-00	CARBON	3.3K	5%	1/4W
R719	1-246-497-00	CARBON	10K	5%	1/4W
R720	1-246-469-00	CARBON	680	5%	1/4W
R721	1-246-469-00	CARBON	680	5%	1/4W
R722	1-246-505-00	CARBON	22K	5%	1/4W
R723	1-246-525-00	CARBON	150K	5%	1/4W
R724	1-246-497-00	CARBON	10K	5%	1/4W
R725	1-246-517-00	CARBON	68K	5%	1/4W

ELECTRICAL PARTS

Ref.No.	Part No.	Description			
R726	1-246-505-00	CARBON	22K	5%	1/4W
R727	1-246-473-00	CARBON	1K	5%	1/4W
R728	1-246-517-00	CARBON	68K	5%	1/4W
R729	1-246-539-00	CARBON	560K	5%	1/4W
R730	1-246-525-00	CARBON	150K	5%	1/4W
R731	1-246-469-00	CARBON	680	5%	1/4W
R732	1-246-449-00	CARBON	100	5%	1/4W
R733	1-246-505-00	CARBON	22K	5%	1/4W
R734	1-246-469-00	CARBON	680	5%	1/4W
R735	1-246-469-00	CARBON	680	5%	1/4W
R736	1-246-525-00	CARBON	150K	5%	1/4W
R737	1-246-497-00	CARBON	10K	5%	1/4W
R738	1-246-517-00	CARBON	68K	5%	1/4W
R739	1-246-505-00	CARBON	22K	5%	1/4W
R740	1-246-473-00	CARBON	1K	5%	1/4W
R741	1-246-517-00	CARBON	68K	5%	1/4W
R742	1-246-539-00	CARBON	560K	5%	1/4W
R743	1-246-525-00	CARBON	150K	5%	1/4W
R744	1-246-469-00	CARBON	680	5%	1/4W
R745	1-246-449-00	CARBON	100	5%	1/4W
R746	1-246-505-00	CARBON	22K	5%	1/4W
R751	1-246-493-00	CARBON	6.8K	5%	1/4W
R752	1-246-489-00	CARBON	4.7K	5%	1/4W
R753	1-246-493-00	CARBON	6.8K	5%	1/4W
R754	1-246-497-00	CARBON	10K	5%	1/4W
R755	1-246-483-00	CARBON	2.7K	5%	1/4W
R756	1-246-477-00	CARBON	1.5K	5%	1/4W
R757	1-246-492-00	CARBON	6.2K	5%	1/4W
R758	1-246-477-00	CARBON	1.5K	5%	1/4W
R759	1-246-483-00	CARBON	2.7K	5%	1/4W
R760 ⚠	1-123-134-00	METAL OXIDE	180	5%	1W F
R761	1-246-527-00	CARBON	180K	5%	1/4W
R762	1-246-527-00	CARBON	180K	5%	1/4W
R801	1-246-469-00	CARBON	680	5%	1/4W
R802	1-246-469-00	CARBON	680	5%	1/4W
R803	1-246-521-00	CARBON	100K	5%	1/4W
R804	1-246-537-00	CARBON	470K	5%	1/4W
R805	1-246-513-00	CARBON	47K	5%	1/4W
R806	1-246-481-00	CARBON	2.2K	5%	1/4W
R807	1-246-521-00	CARBON	100K	5%	1/4W
R808	1-246-521-00	CARBON	100K	5%	1/4W
R809	1-246-505-00	CARBON	22K	5%	1/4W
R810	1-246-481-00	CARBON	2.2K	5%	1/4W
R811	1-246-471-00	CARBON	820	5%	1/4W
R812	1-246-469-00	CARBON	680	5%	1/4W

NOTE:
- Items with no part number and no description are not stocked because they are seldom required for routine service.
- Items marked " ♦ " are not stocked since thev are seldom required for routine service. Some delay should be anticipated when ordering these items.
- Due to standardization, parts with part numbers (Δ-ΔΔΔ-ΔΔΔ-XX or Δ-ΔΔΔΔ-ΔΔΔ-X) may be different from those used in the set.

CAPACITORS:
- All capacitors are in μF. Common capacitors are omitted. Refer to the following lists for their part numbers. MF:μF, PF:μμF.

RESISTORS
- All resistors are in ohms. Common 1/4W, 1/8W and 1/16W carbon resistors are omitted. Refer to the following lists for their part numbers.
- F : nonflammable

COILS
- MMH : mH, UH : μH

The components identified by shading and mark ⚠ are critical for safety. Replace only with part number specified.

SEMICONDUCTORS
In each case, U : μ, for example:
UA···: μA···, UPA···: μPA···, UPC···: μPC, UPD···: μPD···

ELECTRICAL PARTS

Ref.No.	Part No.	Description			
R813	1-246-469-00	CARBON	680	5%	1/4W
R814	1-246-521-00	CARBON	100K	5%	1/4W
R815	1-246-537-00	CARBON	470K	5%	1/4W
R816	1-246-513-00	CARBON	47K	5%	1/4W
R817	1-246-481-00	CARBON	2.2K	5%	1/4W
R818	1-246-521-00	CARBON	100K	5%	1/4W
R819	1-246-521-00	CARBON	100K	5%	1/4W
R820	1-246-505-00	CARBON	22K	5%	1/4W
R821	1-246-481-00	CARBON	2.2K	5%	1/4W
R822	1-246-523-00	CARBON	120K	5%	1/4W
R823	1-246-523-00	CARBON	120K	5%	1/4W
R824	1-246-543-00	CARBON	820K	5%	1/4W
R825	1-246-497-00	CARBON	10K	5%	1/4W
R826	1-246-517-00	CARBON	68K	5%	1/4W
R827	1-246-509-00	CARBON	33K	5%	1/4W
R828	1-246-514-00	CARBON	51K	5%	1/4W
R829	1-246-505-00	CARBON	22K	5%	1/4W
R830	1-246-505-00	CARBON	22K	5%	1/4W
R831	1-246-517-00	CARBON	68K	5%	1/4W
R832	1-246-509-00	CARBON	33K	5%	1/4W
R833	1-246-505-00	CARBON	22K	5%	1/4W
R834	1-246-497-00	CARBON	10K	5%	1/4W
R835	1-246-505-00	CARBON	22K	5%	1/4W
R836	1-246-509-00	CARBON	33K	5%	1/4W
R837	1-246-517-00	CARBON	68K	5%	1/4W
R838	1-246-505-00	CARBON	22K	5%	1/4W
R839	1-246-509-00	CARBON	33K	5%	1/4W
R840	1-246-517-00	CARBON	68K	5%	1/4W
R841	1-246-505-00	CARBON	22K	5%	1/4W
R842	1-246-509-00	CARBON	33K	5%	1/4W
R843	1-246-517-00	CARBON	68K	5%	1/4W
R844	1-246-481-00	CARBON	2.2K	5%	1/4W
R845	1-246-485-00	CARBON	3.3K	5%	1/4W
R846	1-246-481-00	CARBON	2.2K	5%	1/4W
R847	1-246-485-00	CARBON	3.3K	5%	1/4W
R848	1-246-481-00	CARBON	2.2K	5%	1/4W
R849	1-246-485-00	CARBON	3.3K	5%	1/4W
R850	1-246-517-00	CARBON	68K	5%	1/4W
R851	1-246-509-00	CARBON	33K	5%	1/4W
R852	1-246-473-00	CARBON	1K	5%	1/4W
R853	1-246-517-00	CARBON	68K	5%	1/4W
R854	1-246-509-00	CARBON	33K	5%	1/4W
R855	1-246-505-00	CARBON	22K	5%	1/4W
R856	1-246-505-00	CARBON	22K	5%	1/4W
R857	1-246-505-00	CARBON	22K	5%	1/4W

ELECTRICAL PARTS

Ref.No.	Part No.	Description			
R858	1-246-497-00	CARBON	10K	5%	1/4W
R859	1-246-497-00	CARBON	10K	5%	1/4W
R860	1-246-510-00	CARBON	36K	5%	1/4W
R861	1-246-517-00	CARBON	68K	5%	1/4W
R862	1-246-499-00	CARBON	12K	5%	1/4W
R863	1-246-511-00	CARBON	39K	5%	1/4W
R864	1-246-489-00	CARBON	4.7K	5%	1/4W
R865	1-246-499-00	CARBON	12K	5%	1/4W
R866	1-246-515-00	CARBON	56K	5%	1/4W
R867	1-246-479-00	CARBON	1.8K	5%	1/4W
R868	1-246-473-00	CARBON	1K	5%	1/4W
R869	1-246-473-00	CARBON	1K	5%	1/4W
R870	1-246-521-00	CARBON	100K	5%	1/4W
R871	1-246-473-00	CARBON	1K	5%	1/4W
R872	1-246-497-00	CARBON	10K	5%	1/4W
R873	1-246-485-00	CARBON	3.3K	5%	1/4W
R874	1-246-508-00	CARBON	30K	5%	1/4W
R875	1-246-492-00	CARBON	6.2K	5%	1/4W
R876	1-246-502-00	CARBON	16K	5%	1/4W
R877	1-246-498-00	CARBON	11K	5%	1/4W
R878	1-246-497-00	CARBON	10K	5%	1/4W
R879	1-246-449-00	CARBON	100	5%	1/4W
R880	1-246-497-00	CARBON	10K	5%	1/4W
R881	1-246-521-00	CARBON	100K	5%	1/4W
R882	1-246-521-00	CARBON	100K	5%	1/4W
R883	1-246-521-00	CARBON	100K	5%	1/4W
R884	1-246-521-00	CARBON	100K	5%	1/4W
R885	1-246-465-00	CARBON	470	5%	1/4W
R886	1-246-505-00	CARBON	22K	5%	1/4W
R887	1-246-513-00	CARBON	47K	5%	1/4W
R888	1-246-461-00	CARBON	330	5%	1/4W
R889	1-246-505-00	CARBON	22K	5%	1/4W
R890	1-246-513-00	CARBON	47K	5%	1/4W
R891	1-246-465-00	CARBON	470	5%	1/4W
R892	1-246-505-00	CARBON	22K	5%	1/4W
R893	1-246-513-00	CARBON	47K	5%	1/4W
R894	1-246-470-00	CARBON	750	5%	1/4W
R895	1-246-505-00	CARBON	22K	5%	1/4W
R896	1-246-513-00	CARBON	47K	5%	1/4W
R897	1-246-465-00	CARBON	470	5%	1/4W
R898	1-246-505-00	CARBON	22K	5%	1/4W
R899	1-246-513-00	CARBON	47K	5%	1/4W
R951	1-246-493-00	CARBON	6.8K	5%	1/4W
R952	1-246-493-00	CARBON	6.8K	5%	1/4W
R953	1-246-505-00	CARBON	22K	5%	1/4W

NOTE:
- Items with no part number and no description are not stocked because they are seldom required for routine service.
- Items marked " ♦ " are not stocked since thev are seldom required for routine service. Some delay should be anticipated when ordering these items.
- Due to standardization, parts with part numbers (Δ-ΔΔΔ-ΔΔΔ-XX or Δ-ΔΔΔΔ-ΔΔΔ-X) may be different from those used in the set.

CAPACITORS:
- All capacitors are in μF. Common capacitors are omitted. Refer to the following lists for their part numbers. MF:μF, PF:μμF.

RESISTORS
- All resistors are in ohms. Common 1/4W, 1/8W and 1/16W carbon resistors are omitted. Refer to the following lists for their part numbers.
- F : nonflammable

COILS
- MMH : mH, UH : μH

The components identified by shading and mark ⚠ are critical for safety. Replace only with part number specified.

SEMICONDUCTORS
In each case, U : μ, for example:
UA···: μA···, UPA···: μPA···, UPC···: μPC, UPD···: μPD···

ELECTRICAL PARTS

Ref.No.	Part No.	Description				
R954	1-246-498-00	CARBON	11K	5%	1/4W	
R955	1-246-497-00	CARBON	10K	5%	1/4W	
R956	1-246-520-00	CARBON	91K	5%	1/4W	
R957⚠	1-213-076-00	FUSIBLE	47	5%	1W	F
R958	1-246-489-00	CARBON	4.7K	5%	1/4W	
R959	1-246-481-00	CARBON	2.2K	5%	1/4W	
R960	1-246-489-00	CARBON	4.7K	5%	1/4W	
R961	1-246-489-00	CARBON	4.7K	5%	1/4W	
R962	1-246-497-00	CARBON	10K	5%	1/4W	
R963	1-246-491-00	CARBON	5.6K	5%	1/4W	
R964	1-246-490-00	CARBON	5.1K	5%	1/4W	
R965	1-246-481-00	CARBON	2.2K	5%	1/4W	
R966⚠	1-206-467-00	METAL OXIDE	15	5%	2W	F
R967⚠	1-217-395-00	FUSIBLE	47	5%	1/4W	F
RV101	1-224-247-XX	RES, ADJ, METAL GLAZE 100				
RV102	1-224-250-XX	RES, ADJ, METAL GLAZE 2.2K				
RV103	1-228-127-00	RES, VAR, CARBON 20K				
RV104	1-228-128-00	RES, VAR, CARBON 5K				
RV105	1-224-251-XX	RES, ADJ, METAL GLAZE 4.7K				
RV106	1-224-248-XX	RES, ADJ, METAL GLAZE 470				
RV107	1-224-251-XX	RES, ADJ, METAL GLAZE 4.7K				
RV108	1-224-251-XX	RES, ADJ, METAL GLAZE 4.7K				
RV109	1-224-250-XX	RES, ADJ, METAL GLAZE 2.2K				
RV110	1-224-251-XX	RES, ADJ, METAL GLAZE 4.7K				
RV307	1-224-251-XX	RES, ADJ, METAL GLAZE 4.7K				
RV308	1-224-251-XX	RES, ADJ, METAL GLAZE 4.7K				
RV501	1-228-128-00	RES, VAR, CARBON 5K				
RV601	1-224-254-XX	RES, ADJ, METAL GLAZE 47K				
RV602	1-226-234-00	RES, ADJ, CARBON 2K				
RV603	1-226-239-00	RES, ADJ, CARBON 100K				
RV604	1-226-234-00	RES, ADJ, CARBON 2K				
RV605	1-226-239-00	RES, ADJ, CARBON 100K				
RV701	1-226-236-00	RES, ADJ, CARBON 10K				
RV702	1-224-252-XX	RES, ADJ, METAL GLAZE 10K				
RV703	1-226-236-00	RES, ADJ, CARBON 10K				
RV801	1-226-241-00	RES, ADJ, CARBON 500K				
RV802	1-226-241-00	RES, ADJ, CARBON 500K				
RY501	1-515-323-00	RELAY				
RY502	1-515-323-00	RELAY				
RY503	1-515-323-00	RELAY				
RY504	1-515-323-00	RELAY				
RY505	1-515-323-00	RELAY				
RY506	1-515-323-00	RELAY				
RY507	1-515-467-00	RELAY, LATCH				
RY508	1-515-467-00	RELAY, LATCH				

ELECTRICAL PARTS

Ref.No.	Part No.	Description
S01	1-552-539-00	SWITCH, KEY BOARD
S02	1-552-539-00	SWITCH, KEY BOARD
S03	1-552-539-00	SWITCH, KEY BOARD
S04	1-552-539-00	SWITCH, KEY BOARD
S05	1-552-539-00	SWITCH, KEY BOARD
S06	1-552-539-00	SWITCH, KEY BOARD
S07	1-552-539-00	SWITCH, KEY BOARD
S501	1-553-254-00	SWITCH, ROTARY
S502	1-554-338-00	SWITCH, LEVER SLIDE
S503	1-554-007-12	SWITCH, PUSH
S504	1-552-964-00	SWITCH, ROTARY
S505	1-553-638-00	SWITCH, SLIDE
S601	1-553-325-00	SWITCH
S801	1-553-206-00	SWITCH, SLIDE
S851	1-552-539-00	SWITCH, KEY BOARD
S852	1-552-539-00	SWITCH, KEY BOARD
S853	1-552-539-00	SWITCH, KEY BOARD
S854	1-552-539-00	SWITCH, KEY BOARD
S855	1-552-539-00	SWITCH, KEY BOARD
S856	1-552-539-00	SWITCH, KEY BOARD
S857	1-552-539-00	SWITCH, KEY BOARD
S951⚠	1-553-318-00	SWITCH, PUSH (AC POWER)
S1001	1-552-268-00	SWITCH, SLIDE
S1002	1-552-268-00	SWITCH, SLIDE
TH101	1-800-200-00	THERMISTOR S-3K
TH301	1-800-200-00	THERMISTOR S-3K
TH1001	8-719-814-11	DIODE THS102
TH1002	8-719-814-11	DIODE THS102
TH1003	8-719-814-11	DIODE THS102
TH1004	8-719-814-11	DIODE THS102
TH1005	8-719-814-11	DIODE THS102
TH1006	8-719-814-11	DIODE THS102
TP1 ♦	;1-560-060-31	PIN, CONNECTOR 2P
TP2 ♦	;1-560-060-31	PIN, CONNECTOR 2P
TP3 ♦	;1-560-060-31	PIN, CONNECTOR 2P
TP601♦	;1-560-060-31	PIN, CONNECTOR 2P
TP602♦	;1-560-060-31	PIN, CONNECTOR 2P
TP701♦	;1-560-060-31	PIN, CONNECTOR 2P
X601	1-527-815-00	OSCILLATOR, CRYSTAL

NOTE:
- Items with no part number and no description are not stocked because they are seldom required for routine service.
- Items marked " ♦ " are not stocked since they are seldom required for routine service. Some delay should be anticipated when ordering these items.
- Due to standardization, parts with part numbers (Δ-ΔΔΔ-ΔΔΔ-XX or Δ-ΔΔΔΔ-ΔΔΔ-X) may be different from those used in the set.

CAPACITORS:
- All capacitors are in μF. Common capacitors are omitted. Refer to the following lists for their part numbers. MF:μF, PF:μμF.

RESISTORS
- All resistors are in ohms. Common 1/4W, 1/8W and 1/16W carbon resistors are omitted. Refer to the following lists for their part numbers.
- F : nonflammable

COILS
- MMH : mH, UH : μH

The components identified by shading and mark ⚠ are critical for safety. Replace only with part number specified.

SEMICONDUCTORS
In each case, U : μ, for example:
UA···: μA···, UPA···: μPA···, UPC···: μPC,
UPD···: μPD···

9-951-090-11

Sony Corporation
Consumer Products Group
Technical Support Dept.

English
83C0556-1
Printed in Japan