TC-K777

US Model
Canadian Model
AEP Model
E Model

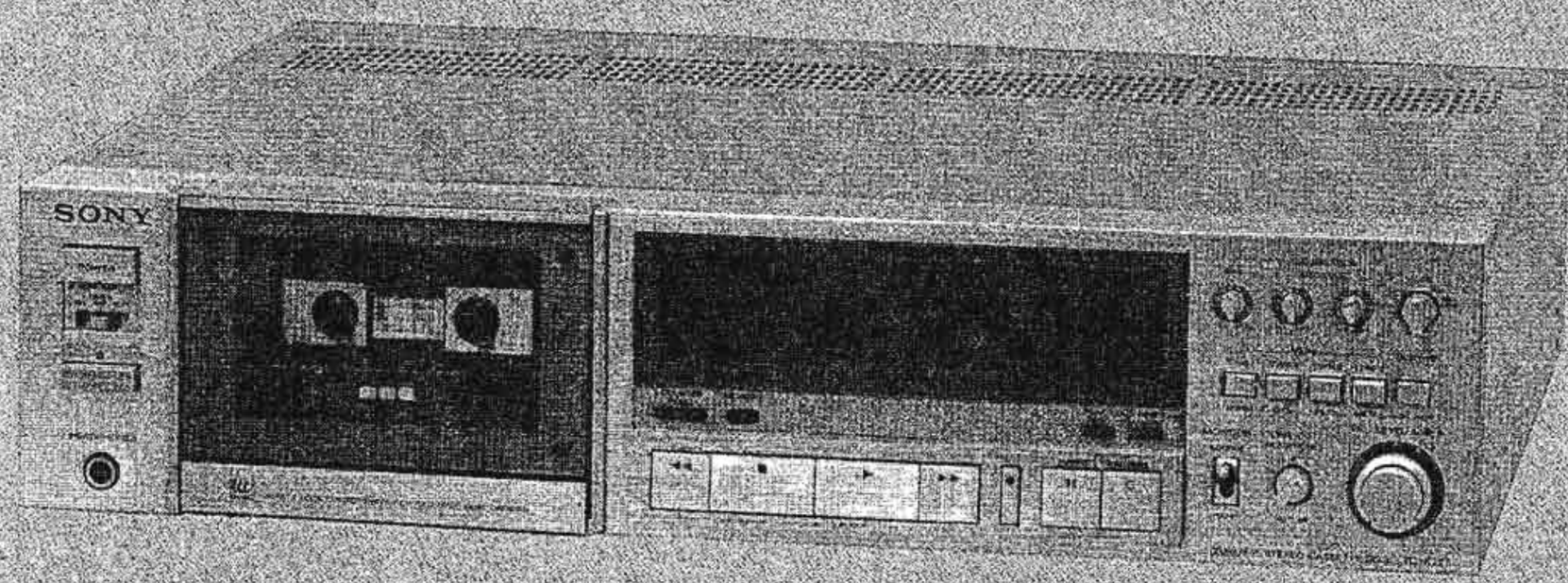

"Dolby" and the double-D symbol are the trade marks of Dolby Laboratories. Noise reduction system manufactured under license from Dolby Laboratories.

STEREO CASSETTE DECK

SPECIFICATIONS

Recording System: 4-track 2-channel stereo

Fast-forward and Rewind Time: Approx. 80 sec. (with C-60 cassette)

Bias Frequency: 105 kHz

Signal-to-noise Ratio:

AEP, E model:
DOLBY NR OFF
- With TYPE IV cassette (Sony METALLIC)
  60 dB at peak level (NAB)
  58 dB (DIN)
- With TYPE III cassette (Sony FeCr)
  60 dB at peak level (NAB)
  58 dB (DIN)
- With TYPE II cassette (Sony CD-α)
  58 dB at peak level (NAB)
- With TYPE I cassette (Sony BHF)
  56 dB at peak level (NAB)

DOLBY NR ON
Improved by 5 dB at 1 kHz,
10 dB above 5 kHz

US, Canadian model:
DOLBY NR OFF
- With TYPE IV cassette (Sony METALLIC)
  60 dB at peak level
- With TYPE III cassette (Sony FeCr)
  60 dB at peak level
- With TYPE II cassette (Sony EHF)
  58 dB at peak level
- With TYPE I cassette (Sony HFX)
  56 dB at peak level

DOLBY NR ON
Improved by 5 dB at 1 kHz,
10 dB above 5 kHz

– Continued on page 2 –

SAFETY-RELATED COMPONENT WARNING!!

COMPONENTS IDENTIFIED BY SHADING AND MARK ⚠ ON THE SCHEMATIC DIAGRAMS, EXPLODED VIEWS AND IN THE PARTS LIST ARE CRITICAL TO SAFE OPERATION. REPLACE THESE COMPONENTS WITH SONY PARTS WHOSE PART NUMBERS APPEAR AS SHOWN IN THIS MANUAL OR IN SUPPLEMENTS PUBLISHED BY SONY.

ATTENTION AU COMPOSANT AYANT RAPPORT À LA SÉCURITÉ!

LES COMPOSANTS IDENTIFIÉS PAR UNE TRAME ET UNE MARQUE ⚠ SUR LES DIAGRAMMES SCHÉMATIQUES, LES VUES EXPLOSÉES ET LA LISTE DES PIÈCES SONT CRITIQUES POUR LA SÉCURITÉ DE FONCTIONNEMENT. NE REMPLACER CES COMPOSANTS QUE PAR DES PIÈCES SONY DONT LES NUMÉROS SONT DONNÉS DANS CE MANUEL OU DANS LES SUPPLÉMENTS PUBLIÉS PAR SONY.

SONY®

SERVICE MANUAL

Total Harmonic Distortion: 0.8 % (with Sony METALLIC and FeCr cassettes)

Frequency Response:

AEP, E model:
DOLBY NR OFF
- With TYPE IV cassette (Sony METALLIC)
  20 – 20,000 Hz
  30 – 18,000 Hz (±3 dB)
  30 – 13,000 Hz (±3 dB, 0 VU recording)
  30 – 18,000 Hz (DIN)
- With TYPE III cassette (Sony FeCr)
  20 – 20,000 Hz
  30 – 18,000 Hz (±3 dB)
  30 – 18,000 Hz (DIN)
- With TYPE II cassette (Sony CD-α)
  20 – 19,000 Hz
  30 – 17,000 Hz (±3 dB)
  30 – 17,000 Hz (DIN)
- With TYPE I cassette (Sony BHF)
  20 – 19,000 Hz
  30 – 17,000 Hz (±3 dB)
  30 – 17,000 Hz (DIN)

US model:
DOLBY NR OFF
- With TYPE IV cassette (Sony METALLIC)
  10 – 21,000 Hz
  20 – 20,000 Hz (±3 dB)
  30 – 13,000 Hz (±3 dB, 0 VU recording)
- With TYPE III cassette (Sony FeCr)
  10 – 21,000 Hz
  20 – 20,000 Hz (±3 dB)
- With TYPE II cassete (Sony EHF)
  10 – 20,000 Hz
  20 – 18,000 Hz (±3 dB)
- With TYPE I cassette (Sony HFX)
  10 – 20,000 Hz
  20 – 18,000 Hz (±3 dB)

Canadian model:
DOLBY NR OFF
- With TYPE IV cassette (Sony METALLIC)
  20 – 20,000 Hz
  30 – 18,000 Hz (±3 dB)
  30 – 13,000 Hz (±3 dB, 0 VU recording)
- With TYPE III cassette (Sony FeCr)
  20 – 20,000 Hz
  30 – 18,000 Hz (±3 dB)
- With TYPE II cassette (Sony EHF)
  20 – 19,000 Hz
  30 – 17,000 Hz (±3 dB)
- With TYPE I cassette (Sony HFX)
  20 – 19,000 Hz
  30 – 17,000 Hz (±3 dB)

Wow and Flutter: 0.025 % WRMS (NAB)
±0.07 % (DIN) . . . . . AEP, E model

Inputs: Line inputs (phono jacks)
Sensitivity 77.5 mV (–20 dB)
Input impedance 50 kΩ

Outputs: Fixed line outputs (phono jacks)
Output level 0.435 V (–5 dB) at a load impedance of 50 kΩ
Load impedance over 10 kΩ
Variable line outputs (phono jacks)
Maximum output level 0.435 V (–5 dB) at a load impedance of 50 kΩ
with LINE OUT level control at "0"
Variable in five steps from –5 dB to –29 dB
Load impedance over 10 kΩ
Headphone output
Output level variable in five steps from –20 dB to –44 dB at a load impedance of 8 Ω

GENERAL

Power Requirements:
AEP model: 220 V ac, 50/60 Hz
(240 V ac adjustable by authorized Sony personnel)
E model: 110, 120, 220 or 240 V ac adjustable, 50/60 Hz
US, Canadian model: 120 V ac, 60 Hz

Power Consumption: 41 watts

AC outlet: (US, Canadian model) Unswitched 300 W

Dimensions: Approx. 430(w) x 105(h) x 390(d) mm
(16⅞(w) x 4⅛(h) x 15⅜(d) inches)
including projecting parts and controls

Weight:
AEP, E model:
Approx. 9.8 kg (21 lbs 10 oz)
US, Canadian model:
Approx. 9.6 kg (21 lbs 3 oz)

LED PEAK PROGRAM METERS

Response Range: –40 dB to +8 dB

Frequency Response: 20 – 20,000 Hz ±1.5 dB

Response Time: 1 millisecond

Decay Time (from 0 dB to –20 dB): 750 milliseconds

Overshoot: None

Indicator Elements: 30 elements for each channel

MODEL IDENTIFICATION

– Specification Label –

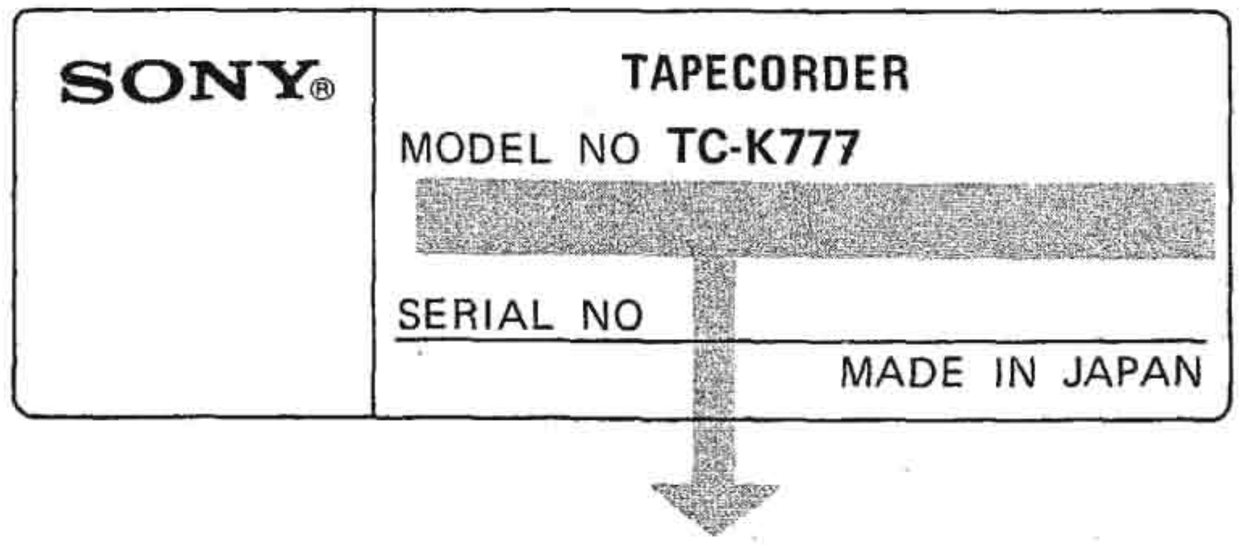

US, Canadian model:	AC 120 V	60 Hz	41 W
AEP model:	AC 220 V ~	50/60 Hz	41 W
E model:	AC 110, 120, 220, 240 V ~	50/60 Hz	41 W

Handling Precautions for MOS ICs

Generally, the insulation resistance of the oxide layer in MOS IC structures is very high, and the oxide layer is very thin. Because of this, it is possible that the static voltages usually present on clothes and the human body will be enough to generate a potential difference across the insulator, high enough to cause a breakdown of the insulating layer.

The following precautions should be taken while handling these ICs.

(Particular care should be taken under conditions of low humidity.)

Precautions in Replacing MOS ICs

1. Store new ICs by inserting them into a urethane-polyester cushion (which is somewhat conductive), or wrapping it in aluminum foil, so that all the pins are at the same potential.
   (The ICs should be stored in that manner until mounted on the circuit board.)

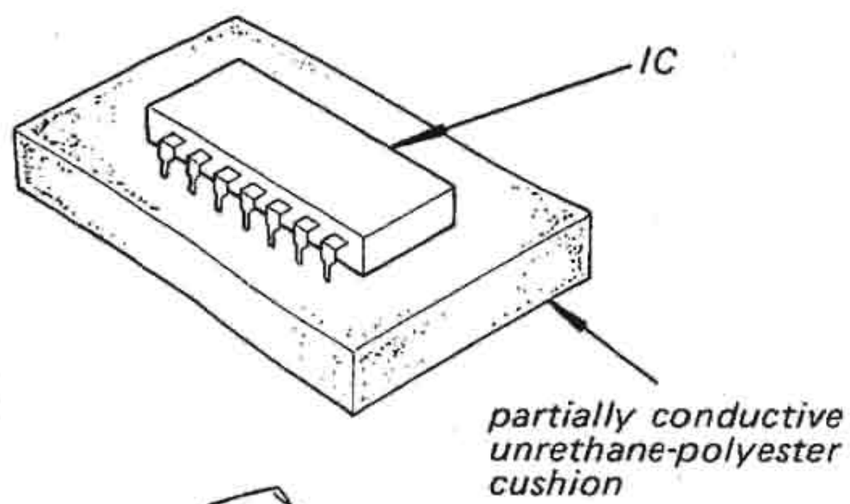

Fig. A

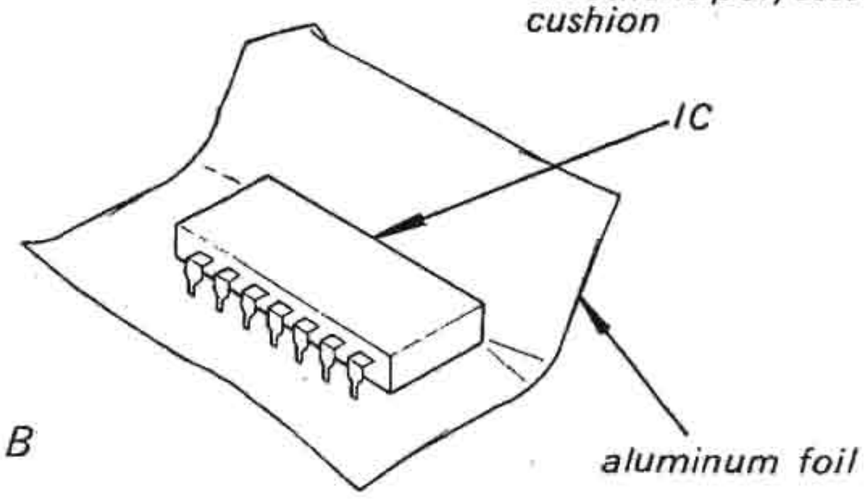

Fig. B

2. Check the soldering iron for possible power-line leakage current. Make sure that there is no leakage path by connecting an ohmmeter to the tip of the soldering iron and the plug as shown in Fig. C. If there is a leakage path, use some other soldering iron.

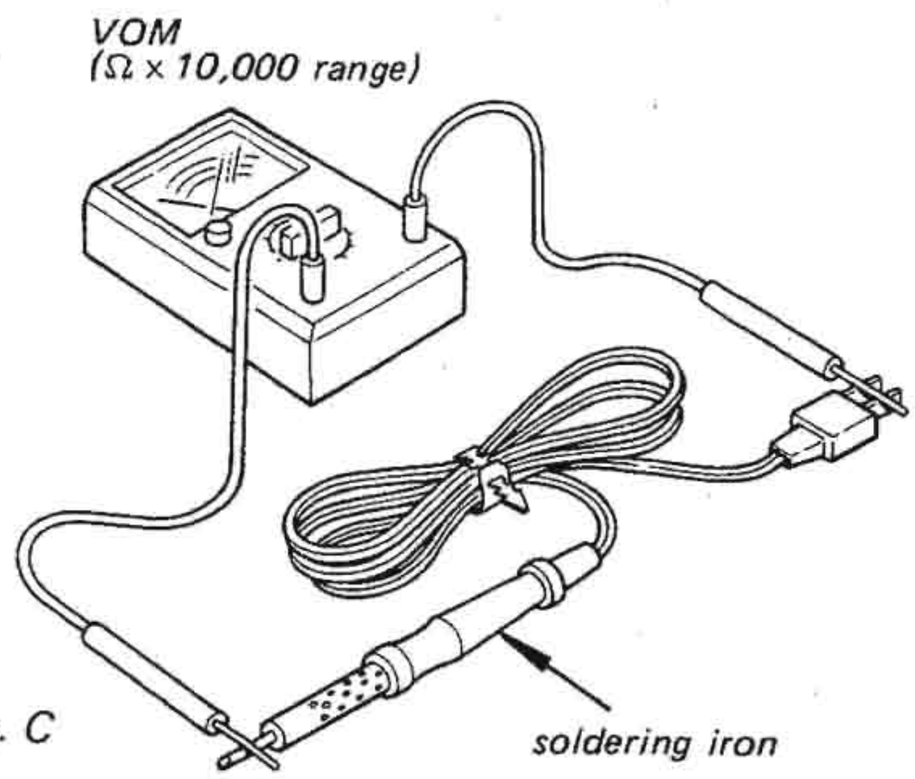

Fig. C

3. Equalize any potential difference between the clothes, the tools in use, the work bench, the set being worked on, and the packaged IC by touching them all in succession with the hands or a conductive wire or tool.

4. The following are effective methods for handling ICs that remove the potential difference across the oxide layer.
   - Use a paper clip modified by soldering in a wire braid insert.

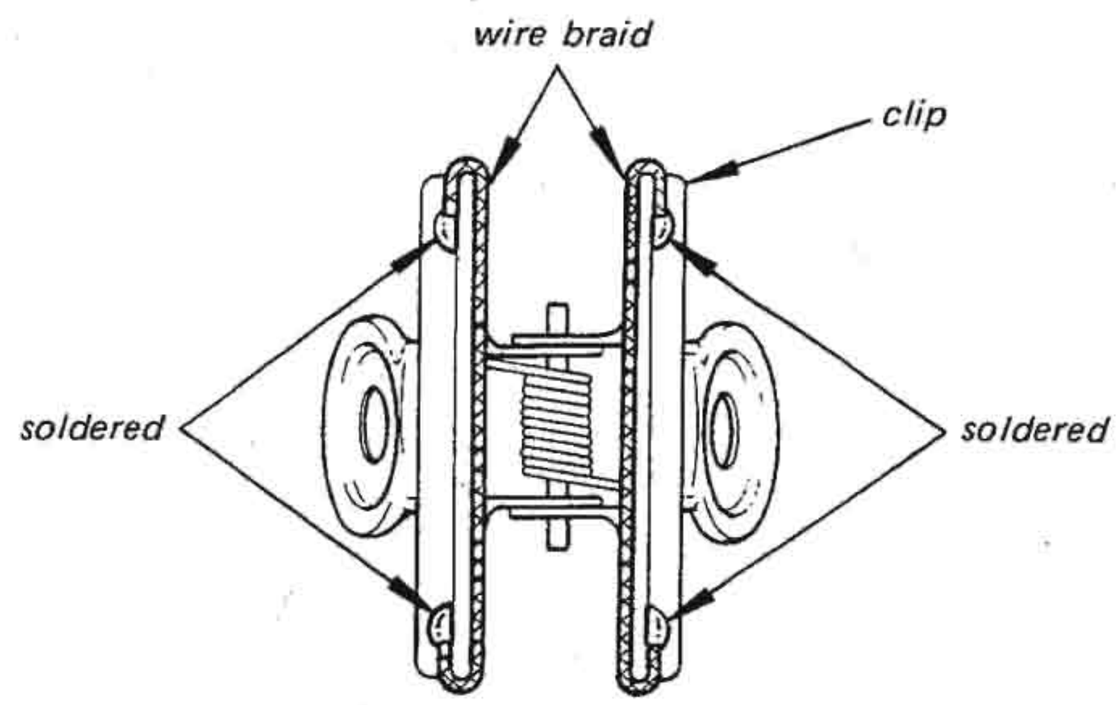

Fig. D Make sure that there is no solder on the inside.

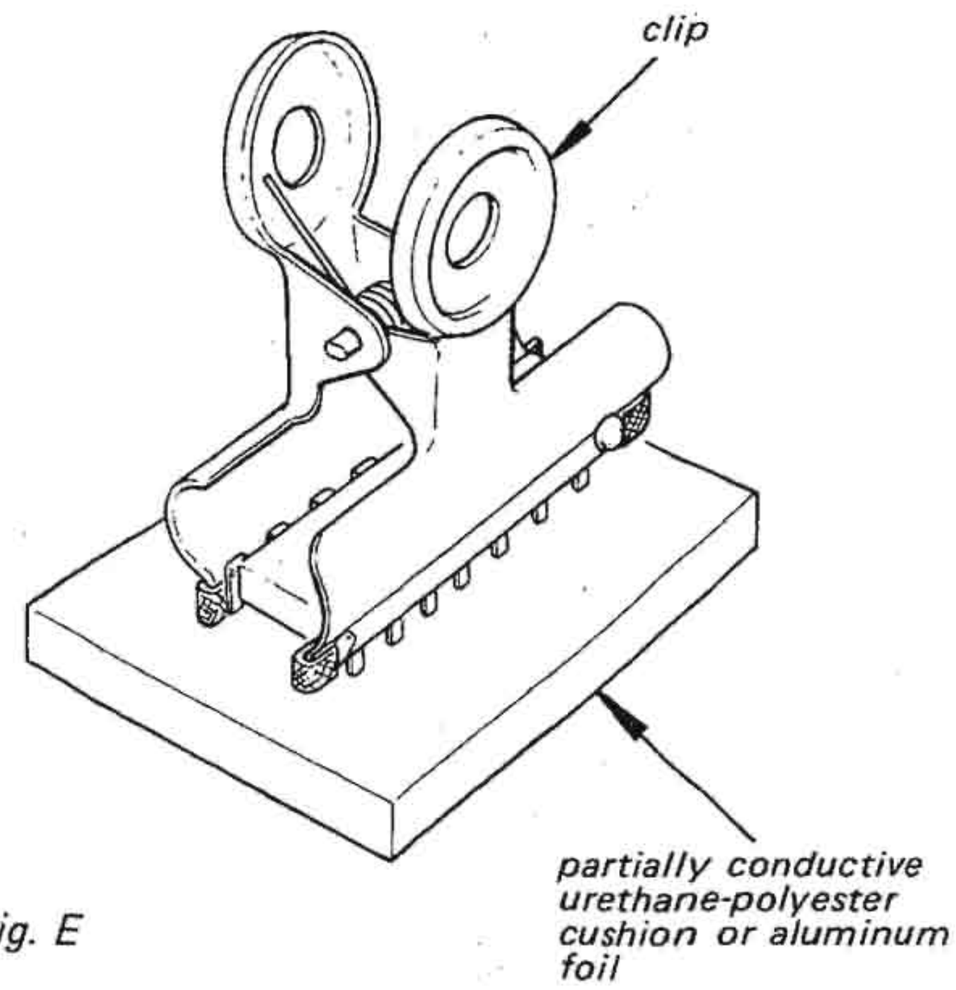

Fig. E

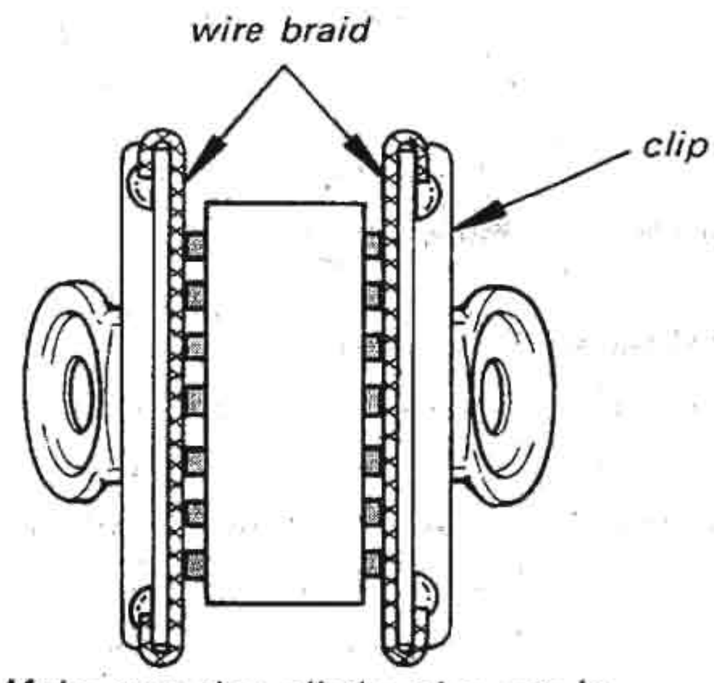

Fig. F Make sure that all the pins are in contact with the wire braid (all the pins will then be at the same potential.).

- Take a short length of fine bare wire and wind it around the IC so that it shorts all the pins of the IC, while it is still in the urethane-polyester cushion or aluminum foil. This ensures that all the pins are at the same potential.

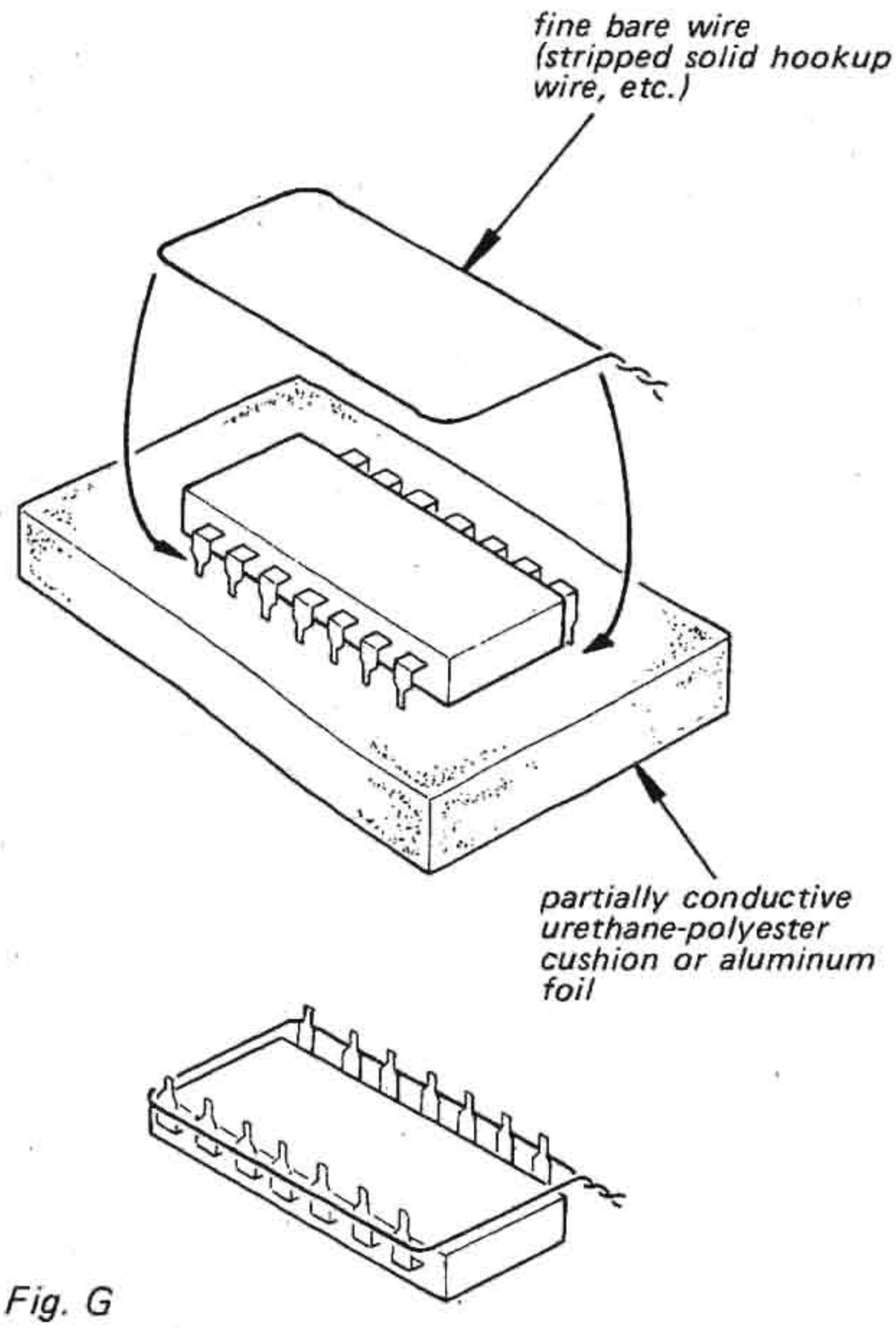

Fig. G

- When it is necessary to handle the IC with the fingers, do not touch any pin, and hold the IC at the ends of its plastic-package case as shown in Fig. H.

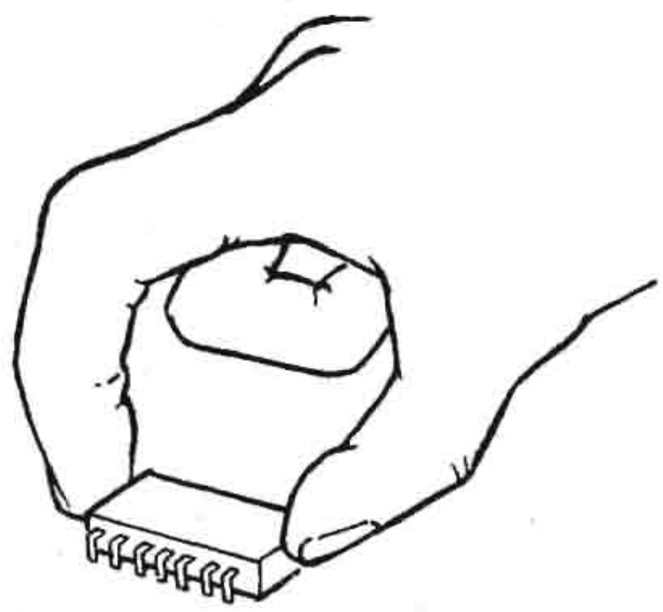

Fig. H

5. Method of Mounting
Insert the IC while holding it with the modified clip, and solder all the pins with the clip still shorting the pins. (Similarly, solder all the pins while the bare shorting wire is still wound around them.). Remove the clip or the bare shorting wire only after all the pins have been soldered.

Precaution while Checking C-MOS ICs

The C-MOS ICs (Complementary MOS) are MOS ICs that have their output sections made up of N-channel and P-channel push-pull stages to increase their speed of operation. If the output terminal of these ICs comes into contact with B+ or B– voltage, then the FET which is ON at that time will either become shorted or open.

This is valid for all the output sections that are connected together by the interconnections. Even the circuits that are physically separated (and not on the same board) can be destroyed simultaneously.

Example:

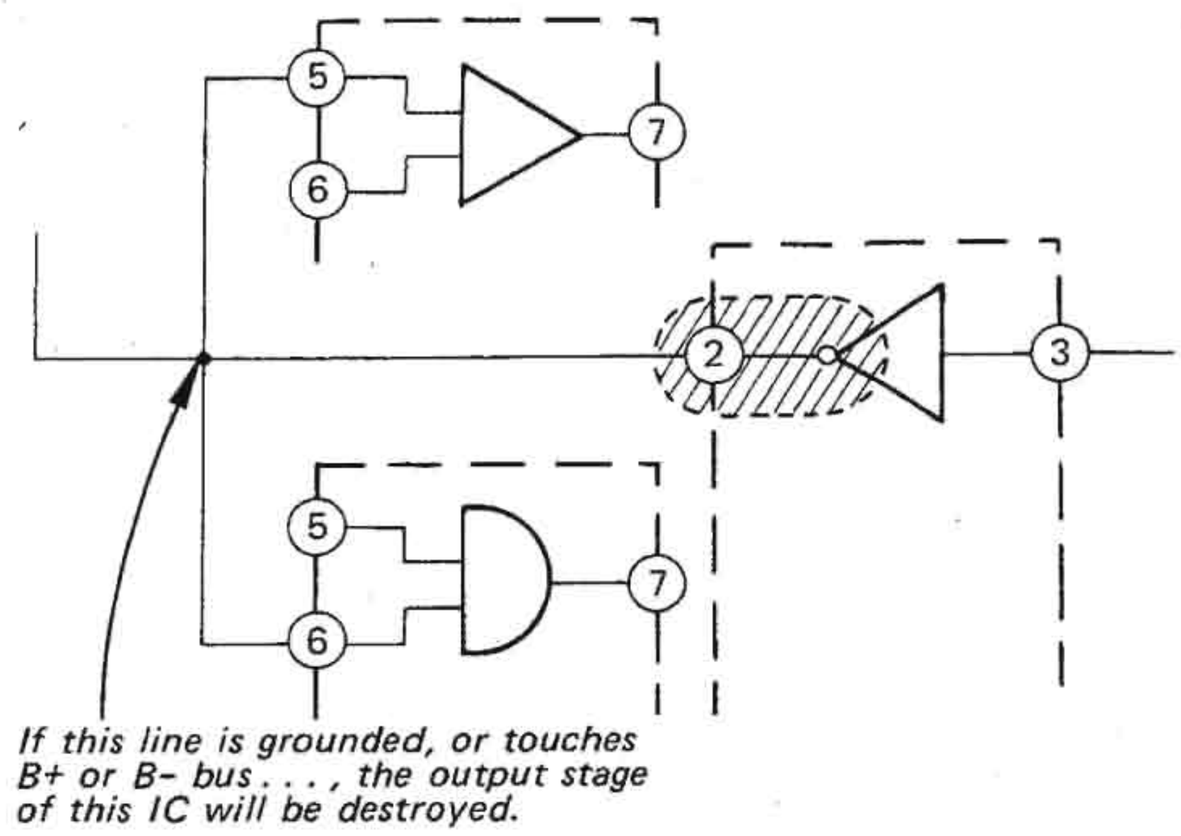

Fig. I

SECTION 1
OUTLINE

1-1. CIRCUIT DESCRIPTION

Linear Counter

This set uses a new type electrical tape counter, instead of the conventional belt-driven mechanical tape counter, by adopting a microcomputer. This tape counter displays the tape-travelling time linearly in actual time in continuous record and playback modes. The tape-travelling time is calculated by the microcomputer IC3 by determining the rotational speeds of the reel spindles. This is done by detecting various factors such as the diameters of the remaining and wound tapes in the supply and take-up reel spindles, diameter of fully-wound tape, diameter of the reel hub, and the tape-travelling speed. This linear tape counter is intended for cassette tapes C-60, C-90 and C-120. The tape counter can not be used with cassette tapes C-46 and C-30. However, the display of the counter also runs linearly when using cassette tapes C-30 and C-46.

In the supply and take-up reel spindles, there is a magnet magnetized at the plural poles, which detects the rotation at the hall elements (HE1005, 1006), then obtains signals as to the rotation speed of supply and take-up reel spindles. These signals are applied to IC803, IC802 and amplified. The pulse output generated here is applied to terminals (23) and (24) of IC3 (microcomputer). IC3 processes and corrects the operation to make the pulse counting for one count per second, and processes carry and decarry operations. Terminals (6) to (13) output signals for each segment. Terminals (16) to (19) output grid-drive signals for the fluorescent display tube. Due to these output signals, the display tube displays four-digit digital minutes/seconds figures in a linear (time-wise) manner.

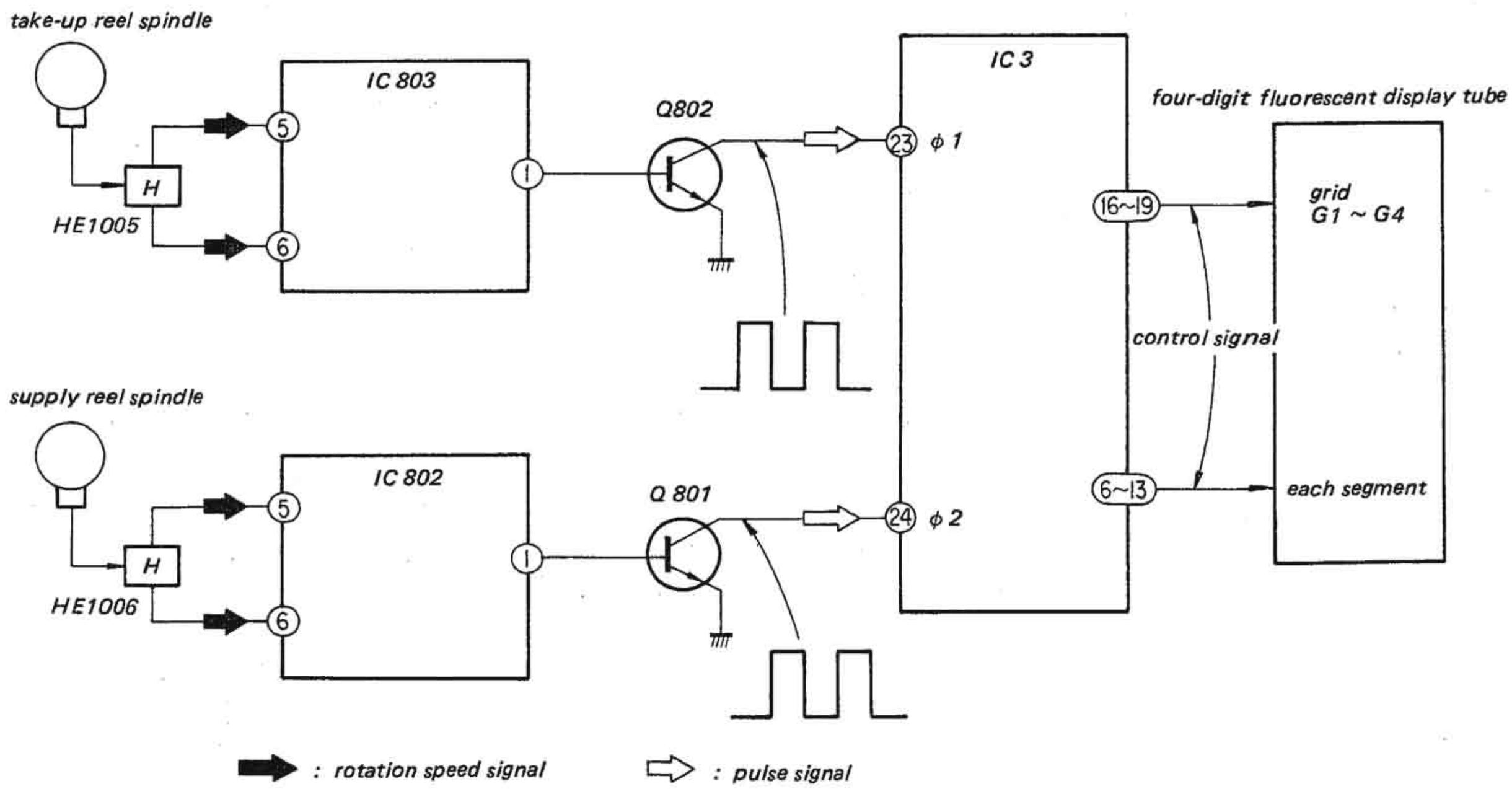

1-2. BLOCK DIAGRAMS
— Audio Amp Section —

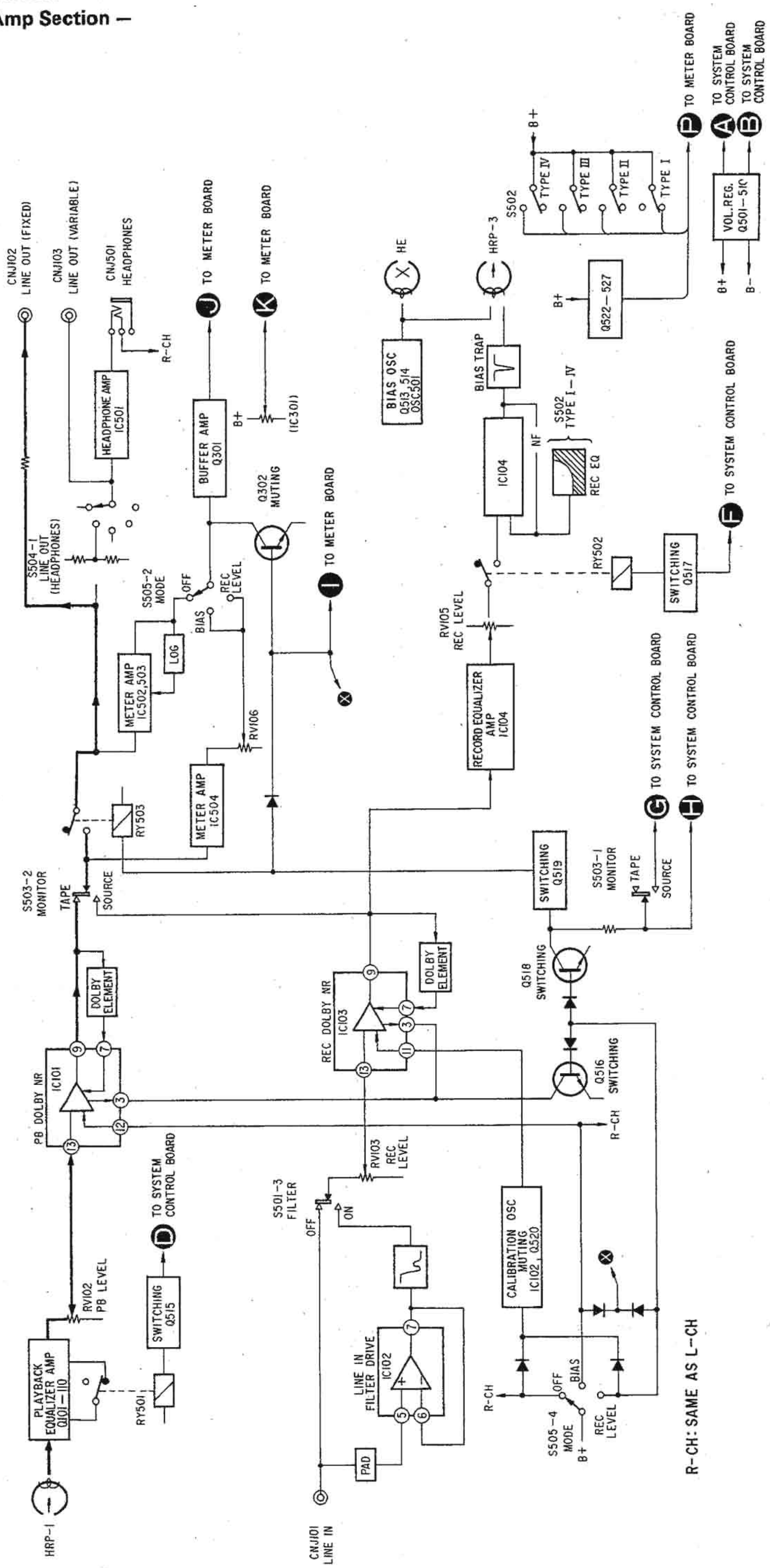

— System Control and Servo Amp Section —

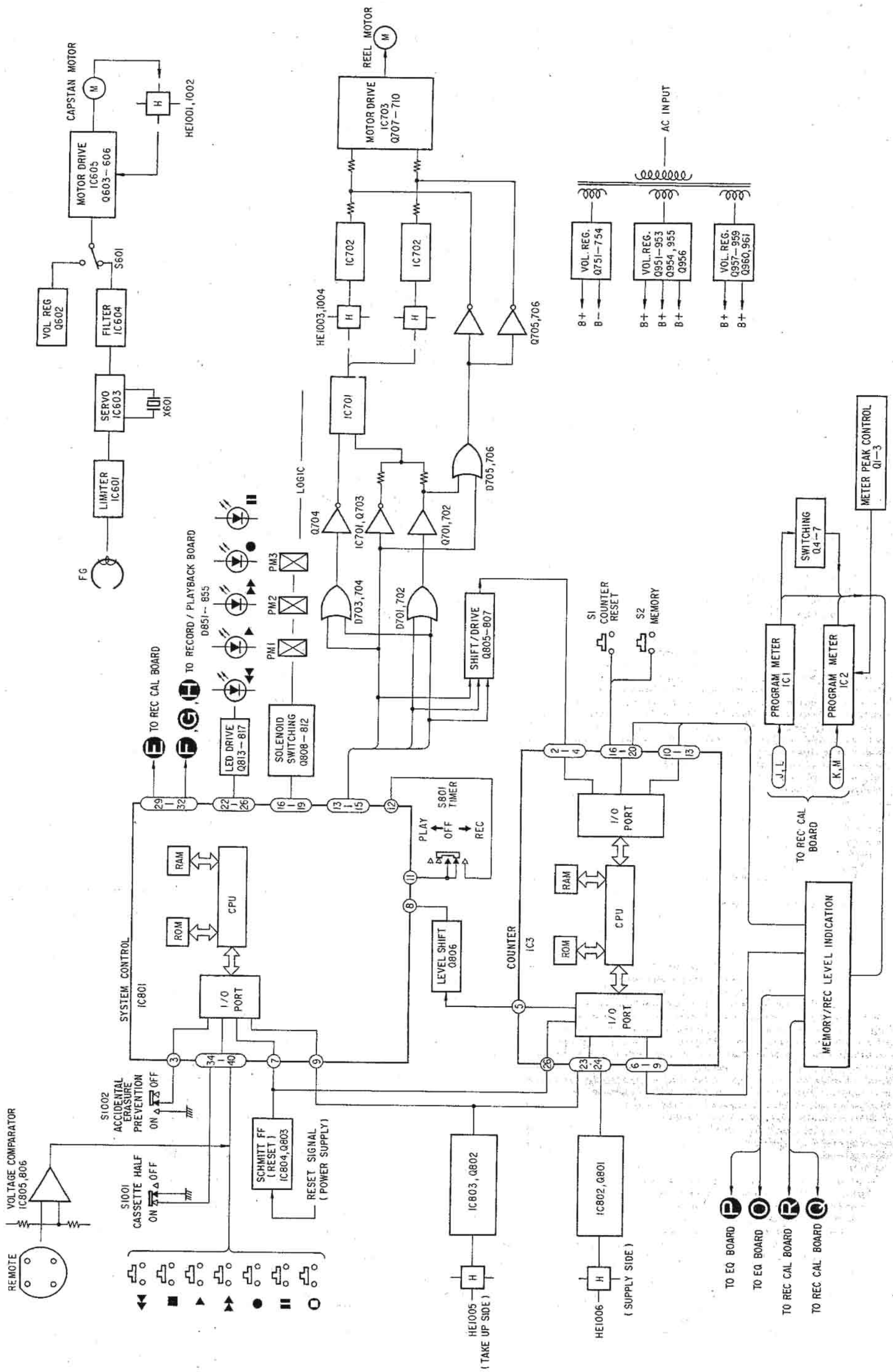

1-3. OUTLINE

CONNECTIONS

Notes

- Turn the amplifier off before making any connection.
- Be sure to insert the plugs firmly into the jacks. Loose connections may cause hum and noise.
- The red plug of the supplied connecting cord should be connected to the red jack (R : right channel) and the other plug to the white jack (L : left channel).

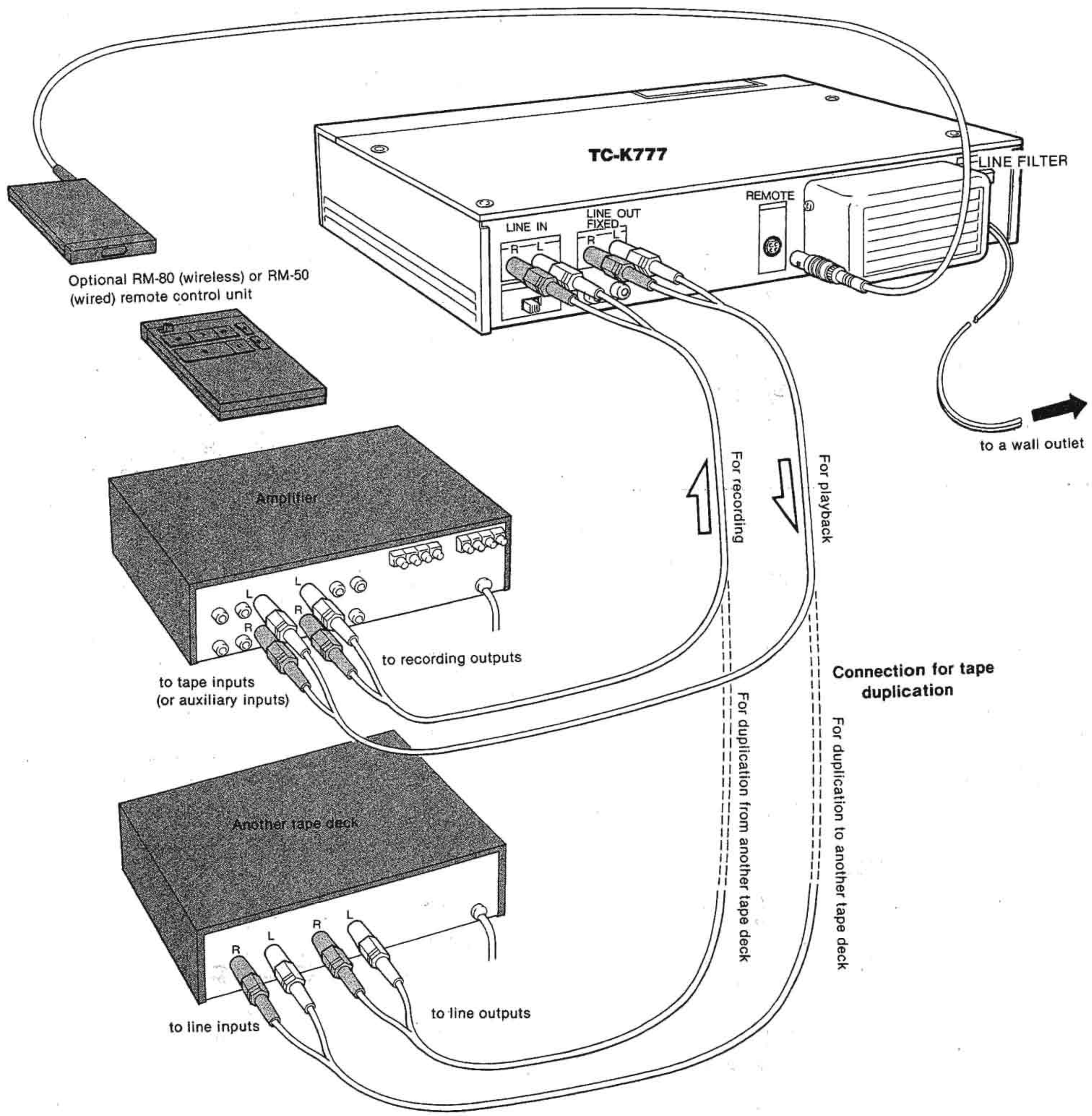

CONNECTIONS USING TWO TYPES OF LINE OUT JACKS

To use another tape deck to duplicate a tape being played without disconnecting the amplifier:

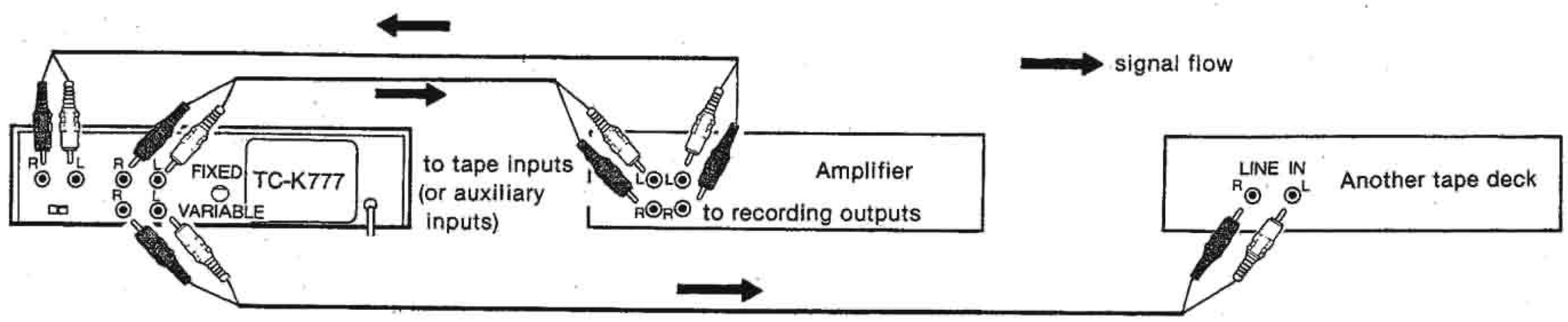

You can duplicate tapes while listening to speakers.

Duplication by two tape decks:

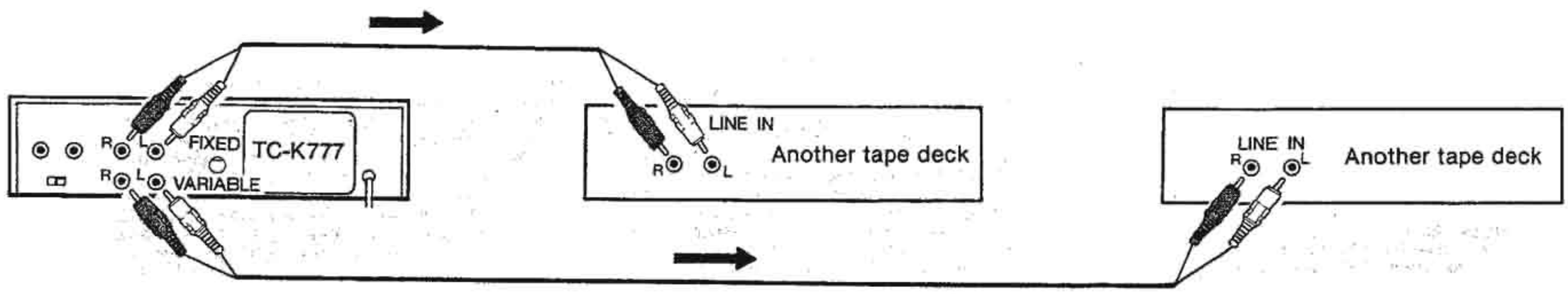

You can duplicate a tape on two decks at the same time.

REMOTE Control Connector

Connect the optional RM-80 (wireless) or RM-50 (wired) remote control unit to operate the tape transport functions from a distance. Read the instruction manual of your remote control unit before operating it.

LINE OUT Jacks

Either the FIXED or VARIABLE LINE OUT jacks can be used.

FIXED: The output level from these jacks is fixed regardless of the setting of the LINE OUT/HEADPHONES level control.

VARIABLE: The output level from these jacks can be adjusted by the LINE OUT/HEADPHONES level control. We recommend that you use these jacks when you want to match the output level of the tape deck with that of any other equipement connected to the amplifier.

LINE FILTER Switch

The line filter reduces the noise produced by an household electric appliance (such as a refrigerator, a fluorescent light, or an air conditioning unit) and transmitted by the ac power cord (mains lead). Since the line filter has an effect on the tone quality, we recommend that you set the LINE FILTER switch to ON only when the line noise is so loud that it might be heard on recording.

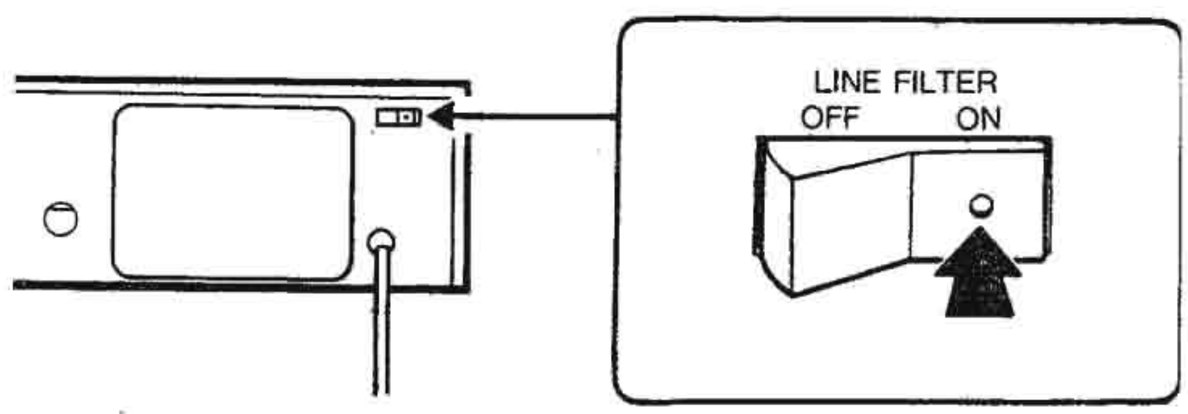

PLAYBACK

The numbers in this diagram indicate the sequence to be followed.

1.

Set the TIMER switch to OFF and depress the POWER switch to ON.

Press the ▲ button and insert a cassette.

2.

MODE
OFF

Set to OFF.

3.

TAPE — DOLBY NR

Depress the appropriate button.

Depress to play back a tape recorded using the Dolby NR system.

Set the input selector to TAPE.

Amplifier

5.

Playback will begin.

4.

MONITOR

Set to TAPE.

RECOMMENDED SETTINGS FOR TAPE SELECT BUTTONS

Tapes (C-60 and C-90)		TAPE
SONY: AHF, BHF BASF: ferro super LH I MAXELL: UD, UD-XL I SCOTCH: MASTER I	AGFA: SUPER FERRO DYNAMIC FUJI: FX-I PHILIPS: SUPER FERRO-I TDK: SD	TYPE I (NORM)
SONY: *CD-α* BASF: chromdioxid MAXELL: UD-XL II SCOTCH: MASTER II	AGFA: STEREO CHROM FUJI: FX-II PHILIPS: CHROMIUM TDK: SA	TYPE II (CrO_2)
SONY: FeCr BASF: ferrochrom SCOTCH: MASTER III	AGFA: CARAT PHILIPS: FERRO CHROMIUM	TYPE III (Fe-Cr)
SONY: METALLIC	Other metal tapes	TYPE IV (METAL)

RECORDING

TO RECORD

The numbers in this diagram indicate the sequence to be followed.

1.

Set the TIMER switch to OFF and depress the POWER switch to ON.

Press the ⏏ button and insert a cassette.

2.

For the calibration see page 12.

CALIBRATION

BIAS 0 | REC LEVEL 0 | MODE OFF

Set to "0" when recording without calibration.

Set to OFF.

If you know the optimum position, set to that position.

3.

TAPE | DOLBY NR

Depress the appropriate button.

Depress to record using Dolby NR system.

Set the input selector to the desired program source.

Amplifier

6.

Recording will begin.

Press at the same time.

4.

MONITOR SOURCE

Set to SOURCE.

5.

Play the program source and adjust the recording level.

Adjust the REC LEVEL controls so that the peak program meters deflect only left end of the red line at the highest signal level.

REC LEVEL

Left channel

Right channel

TO RECORD MATERIAL ONTO A SPECIFIC PORTION OF TAPE

When you want to re-record a specific portion of tape or to insert new material between two points on a tape you will find it handy to be able to change directly from the playback to the record mode by pressing the record button while holding the forward button down.

BIAS/REC LEVEL CALIBRATION

There are many different cassettes on the market and their characteristics vary. The appropriate equalization characteristics and bias current will be obtained when the appropriate TAPE button is pressed. With the TC-K777 cassette deck you can adjust the recording characteristics much more precisely using the bias and record level calibrating function.

CALIBRATION SECTION

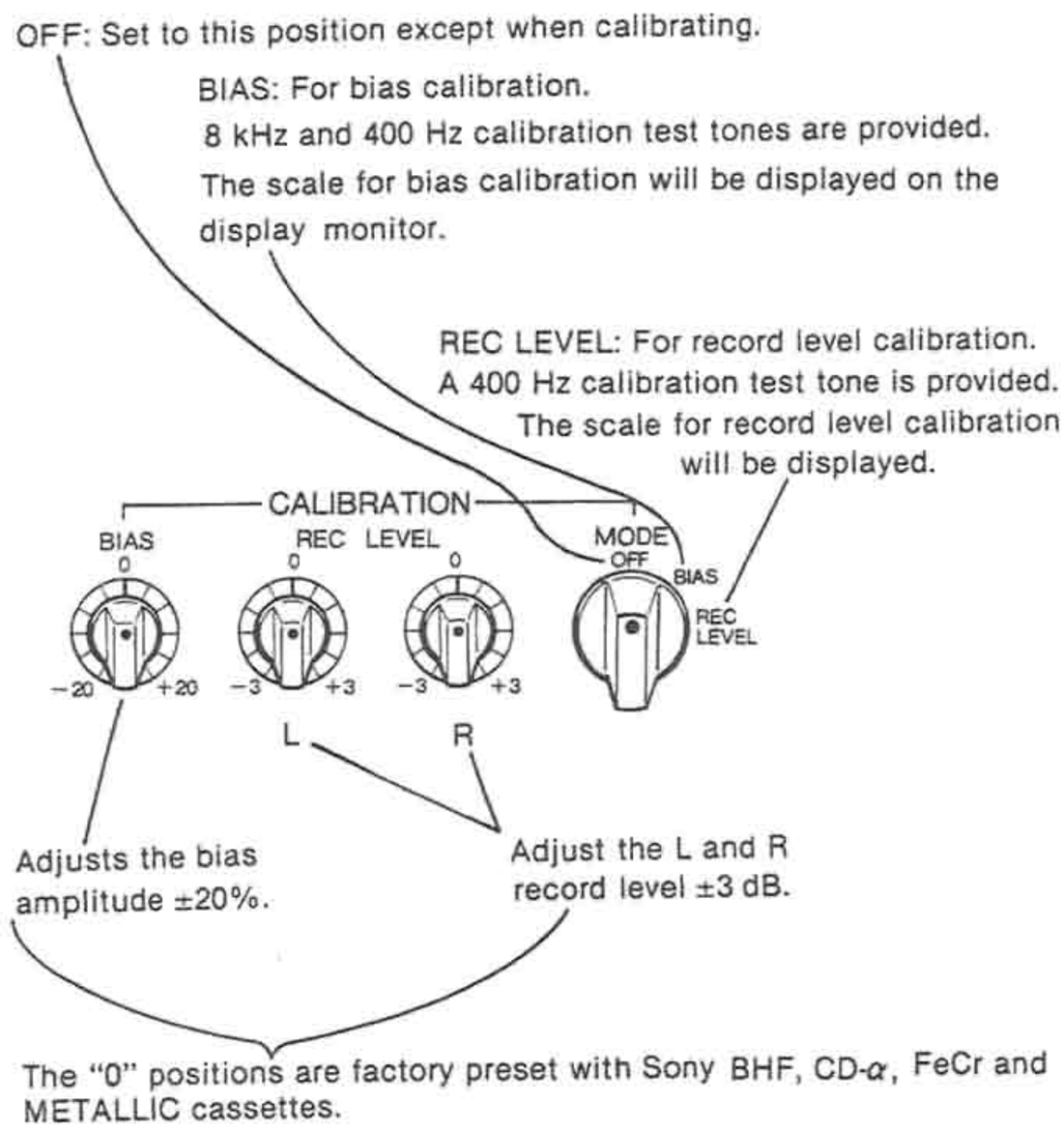

●When the CALIBRATION MODE switch is set at BIAS or REC LEVEL, the input and output signals are cut off internally and no sound is heard, regardless of the position of the MONITOR switch.

BIAS CALIBRATION

Too high a bias level gives a rolled-off high-frequency response, and too little bias reduces the signal-to-noise ratio and increases distortion.
To adjust the bias current to the level which results in the best possible frequency response, proceed as follows.

1. Insert the cassette to be recorded.
2. Press the appropriate TAPE button according to the type of tape.
3. Set the MODE switch to BIAS.
4. Record the calibration test tones by pressing the ● button and the ▶ button.
   The meter shows the playback level of the calibration test tone, regardless of the position of the MONITOR switch.

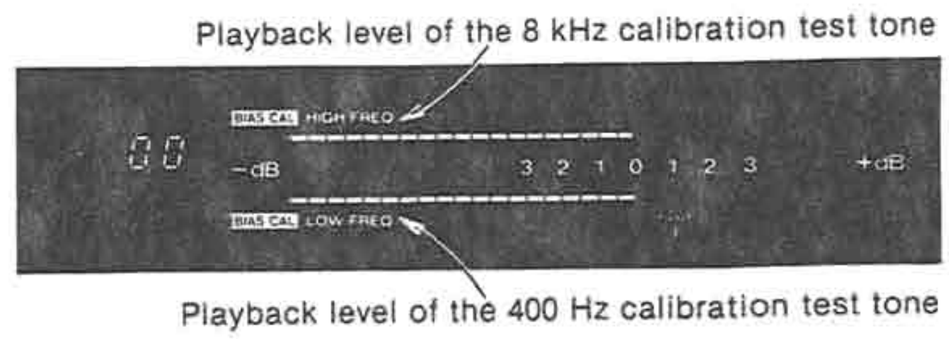

5. Adjust the BIAS control so that the upper and lower meters deflect to the same point.

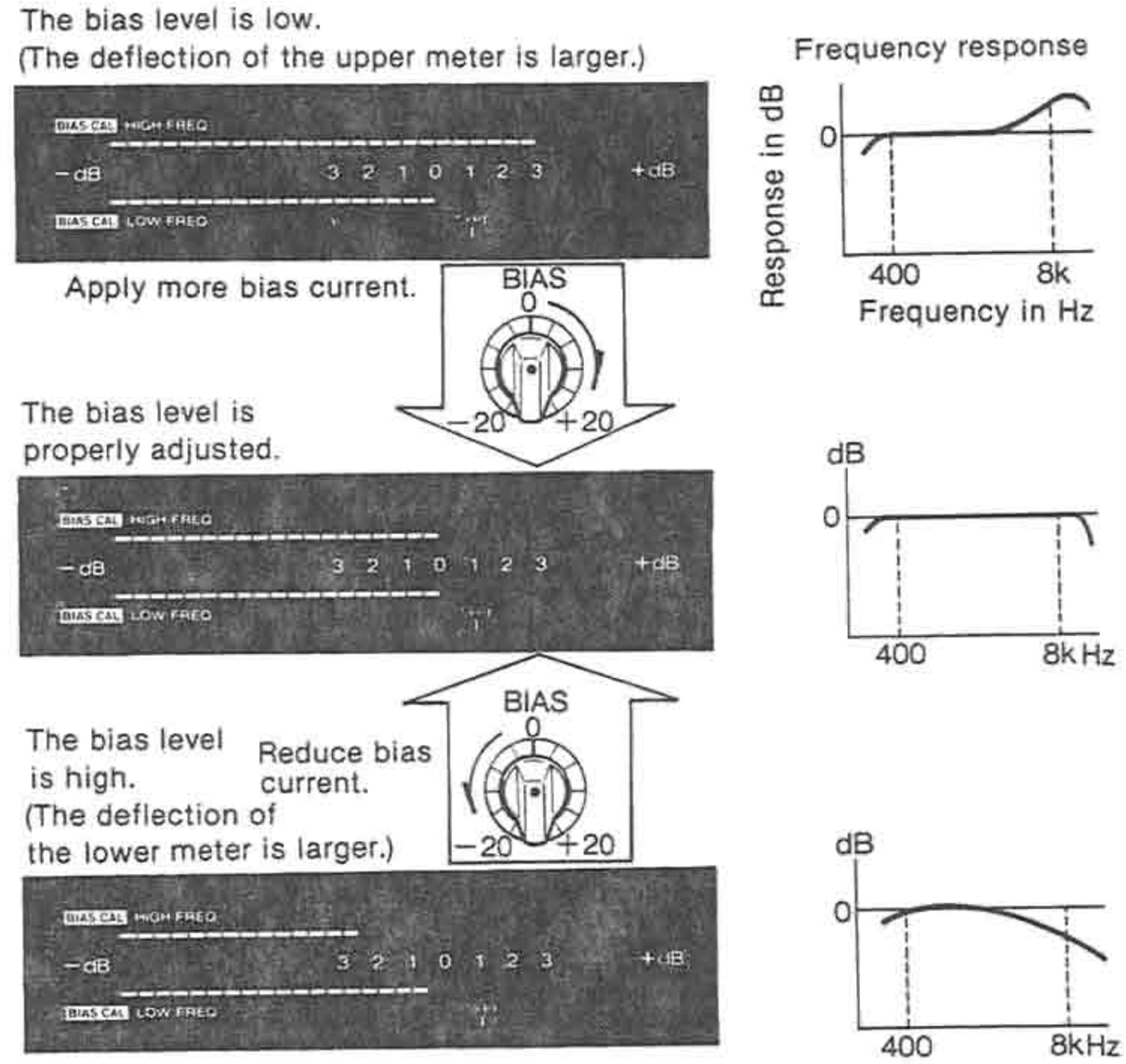

●As small variations in bias amplitude have practically no effect on the frequency response of metal tape, the optimum bias setting may not be obtained within the ±20% range of the BIAS control.

REC LEVEL CALIBRATION

The Dolby NR function is most effective when the recording level and the playback level are the same. Before making a recording, first calibrate the bias level, then calibrate the record level as follows. Tape sensitivity will be compensated for automatically.

1. Set the CALIBRATION MODE switch to REC LEVEL.
2. Record the calibration test tone by pressing the ● button and the ▶ button.
   The meters show the playback level of the calibration test tone regardless of the position of the MONITOR switch.
3. Adjust the REC LEVEL controls (L and R) so that the meters deflect to the indicated point.

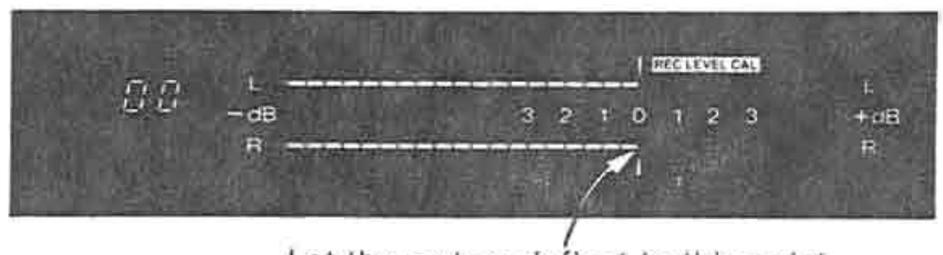

Let the meters deflect to this point.

The bias current is now adjusted to the optimum level and the tape sensitivity is compensated for.

Be sure to set the CALIBRATION MODE switch to OFF.
In order to erase the recorded calibration test tones, rewind the tape and start recording.

RECORDING LEVEL ADJUSTMENT

Adjust the recording level while monitoring on the peak program meters the input level of the program source to be recorded. If the recording level setting is too high, the recording will be distorted, and if the setting is too low, the recording will be noisy. The recording level should be set as high as possible while still avoiding distortion. This level will depend on the type of tape being used.
When the TAPE button is pressed, the range above the saturation level of the selected type of tape is indicated by the red line. Generally speaking, adjust the recording level by making sure that the meters deflect only to the left end of the red line at the highest signal level.

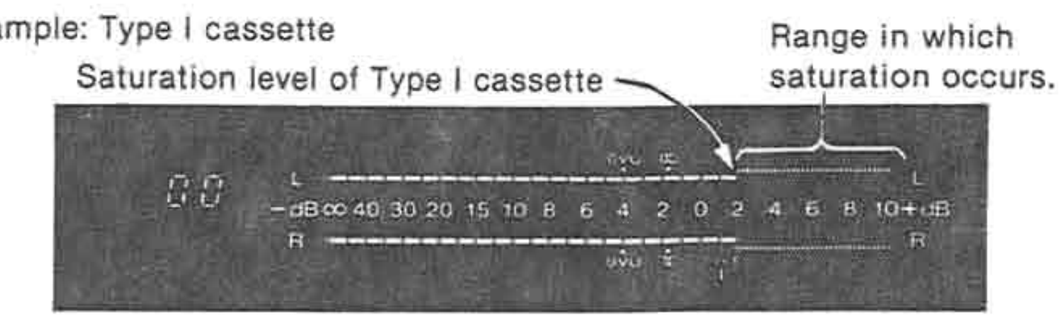

Since the saturation level of any tape is lower in the higher frequencies than in the lower frequencies, the recording level may still be too high if adjusted in this way if the program to be recorded contains many high frequency signals. Consideration has to be given to the program source to be recorded as well as to the characteristics of the cassette to be used, since each cassette, even cassettes using the same type of tape, may have different characteristics. The following table will provide you with a starting point in setting the recording level of various kinds of programs when using Sony cassettes.

Type of tape	Sony cassettes	Low and mid freq. range programs (vocal, etc.)	Mid and high freq. range programs (piano, guitar, etc.)
I	BHF	+ 3 dB	+ 1 dB
	AHF	+ 4 dB	+ 2 dB
II	CD-α	+ 2 dB	+ 2 dB
III	FeCr	+ 5 dB	+ 1 dB
IV	METALLIC	+ 6 dB	+ 6 dB

RECORD MONITORING

As this tape deck has separate record and playback heads, you can easily compare the source and the recorded sounds in the recording mode by using the MONITOR switch. You can check the recording level and whether there is any contamination on the heads that is affecting the recording.

●If the connected amplifier has a tape monitor selector, source/tape comparison is possible with the amplifier monitor selector. In this case, set the tape deck MONITOR switch to TAPE.

MONITOR switch setting and signal flow

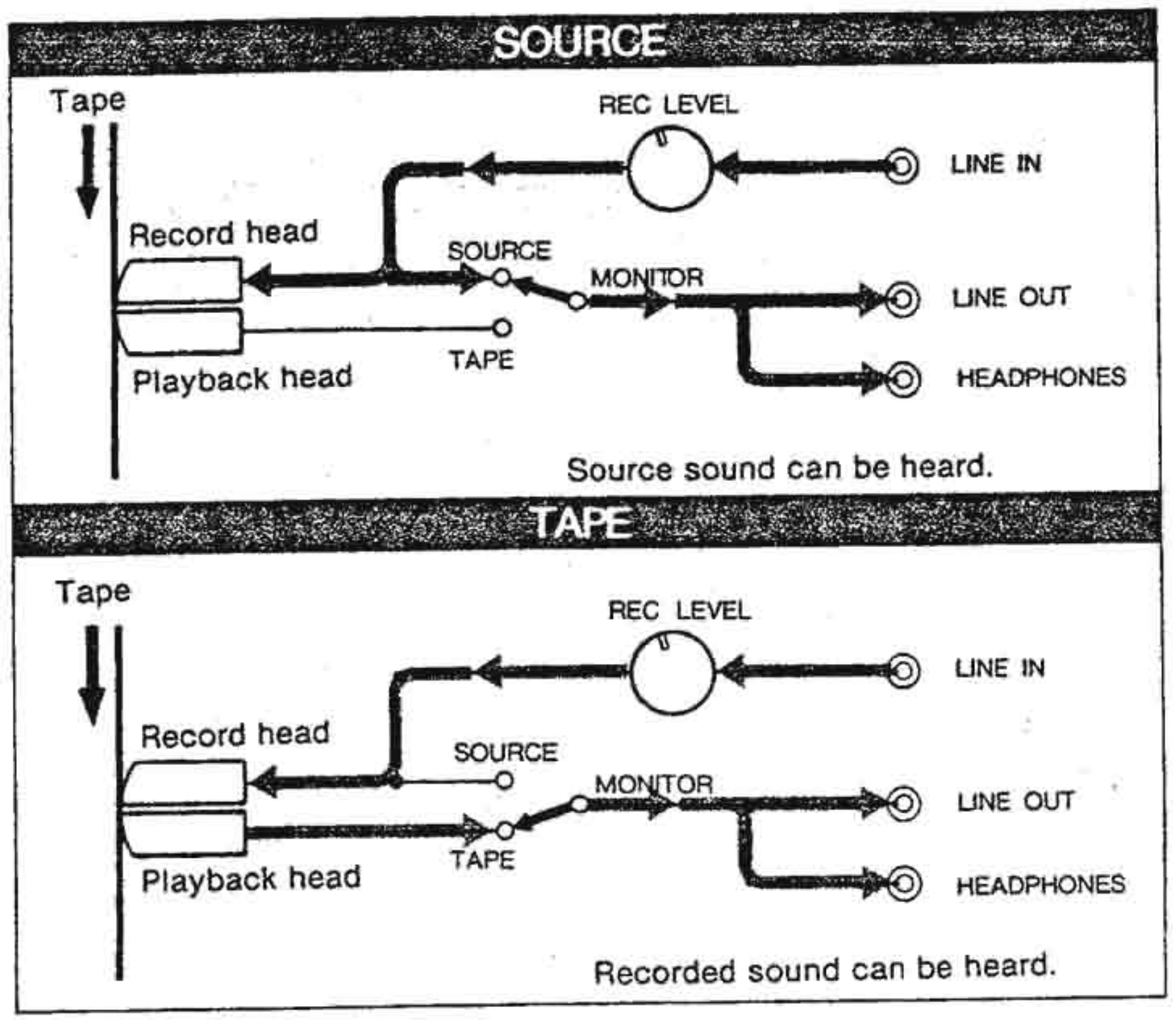

ERASING

When the tape deck functions in recording mode, the erase head automatically erases any previously recorded material.

To erase without recording:

1. Make sure that the safety tab of the cassette is in place, or that the tab slot is covered with plastic tape.
2. Set the REC LEVEL controls fully to "0". (Disconnecting all inputs will result in a more complete erasure.)
3. Press the appropriate TAPE select button according to the type of tape to be erased. (The TYPE IV button assures good erasing for any type of tape.)
4. While holding the record button [●] down, press the forward button [▶].

CHECKING THE AVAILABLE TAPING TIME

—The use of the tape counter—

The first two digits of this tape counter show the approximate recording or playback time in minutes, and the last two digits show the seconds.

To check how much longer you can record

Stop the tape and press the COUNTER RESET button to set the counter to ".00," press the ▶▶ button and let the tape run to the end. The digits on the counter will show the approximate remaining recording time.

To rewind the tape to the ".00" point, use the memory stop function

To check the available recording time on one side of a cassette

At the beginning of the tape set the counter to ".00," press the ▶▶ button and let the tape run to the end. The digits on the counter will show the approximate available recording time.

Note

Do not turn off the power while measuring the time because the numbers will return to ".00" when the power is turned on again.

The accuracy of the counter

This counter is not actually a digital clock, so that the displayed figures are not exactly equal to the actual time spent. The accuracy will vary depending on the type of tape being used.

This counter has been designed using C-60 cassettes as a standard. Make sure that the displayed time is greater than the required actual time when using a C-46 or C-30 cassette.

RECORD MUTING

By pressing the REC MUTE button during recording, four seconds interspacing is provided automatically, eliminating unwanted program material such as broadcasting commercials. While the record muting is operating, the incoming signal is not recorded on the tape but it continues to register on the meters and feed to the monitor so that you know exactly what is going on.

1. Press the REC MUTE button when the segment you do not want to record begins. The indicator of the pause button [❚❚] will blink, and the tape path will pause automatically after four seconds.

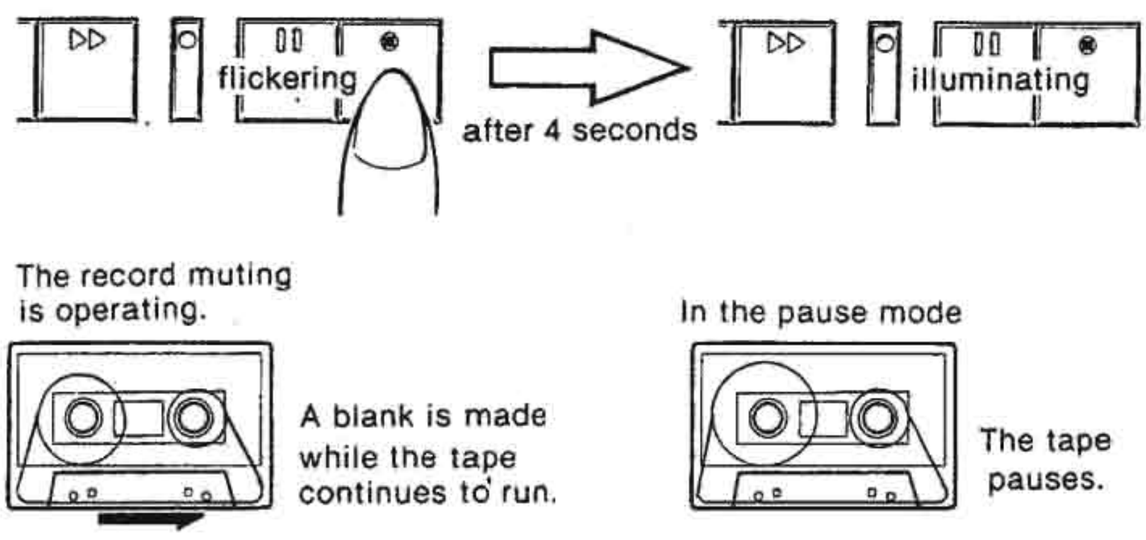

2. When you want to resume recording, press the pause button.

To insert a blank less than four seconds long
Press the REC MUTE button to mute recording. Press the pause button when you want to resume recording.

To insert a blank over four seconds long
Hold down the REC MUTE button for as long as you want the blank segment on the tape to be. After four seconds, the indicator of the pause button will blink more rapidly. When you release the REC MUTE button, the tape deck will be in the pause mode. When you want to resume recording, press the pause button to release the pause mode.

AUTO PLAY

To rewind the tape and play from the beginning of the tape use the auto play function. The tape deck can automatically replay a tape immediately after rewinding.

1. Check that the word "MEMORY" is not displayed on the tape counter. If it is displayed, press the MEMORY button.
2. When you rewind the tape, press the ◀◀ button and the ▶ button simultaneously.

After the tape is completely rewound, the tape will automatically replay.

MEMORY STOP/PLAY

To rewind the tape to a desired point use the memory stop function. To play from a desired point use the memory play function. You can easily locate any particular point on a tape.

1. At the desired point on the tape, press the COUNTER RESET button to turn the tape counter to ".00."
2. Press the MEMORY button. The word "MEMORY" will be indicated.

3. Play back or record on the tape.
4. Rewind the tape in either of the following ways:
   For memory stop: Press the ◀◀ button. The tape stops automatically when it is rewound to the ".00" point.
   For memory play: Press the ◀◀ button and the ▶ button simultaneously. The tape will replay automatically after rewinding up to the ".00" point.

If you wish to rewind further than the ".00" point, press the ◀◀ button again.

TIMER-ACTIVATED RECORDING AND PLAYBACK

By connecting any commercially available timer to the tape deck, the deck can be set to play back or record automatically at any desired time. As timers work in different ways, be sure to read the timer's instruction manual carefully.

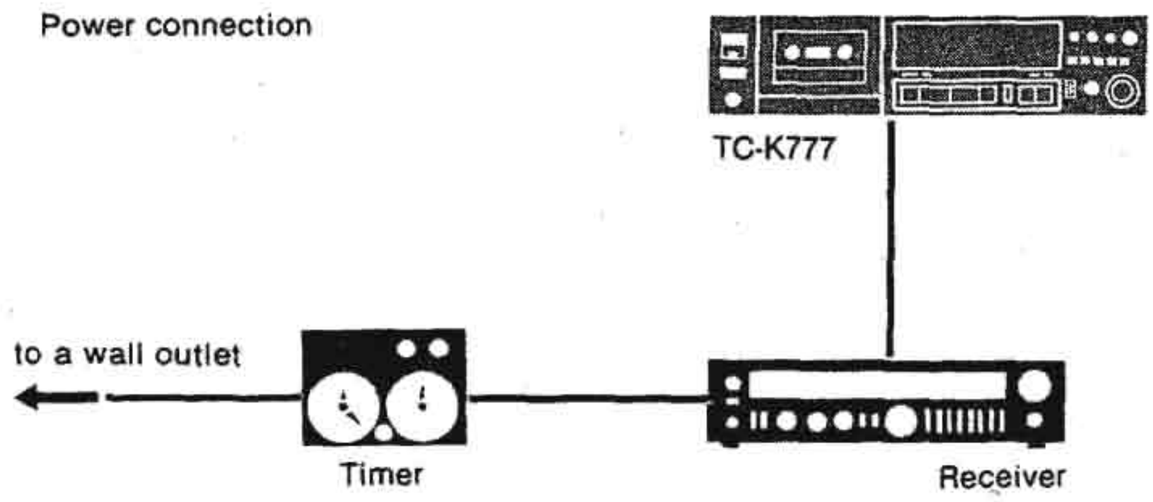

To record a broadcast using a timer

1. Connect the tape deck, receiver and timer. Set the timer so that power is supplied to the connected equipment.
2. Turn on the receiver and tune in the station which will broadcast the program you want to record.
3. Set the tape deck's TIMER switch to OFF.
4. Insert a cassette. Make sure that the tab is intact or that plastic tape covers the tab slot.
5. Turn on the tape deck and adjust the recording level.
6. Set the timer for the desired time. (At this point power to the connected equipment will be cut off.)
7. Set the tape deck's timer switch to REC.
   The tape deck is now ready to start recording at the time set on the timer.

To play back using a timer

The connections between equipment are the same as for recording using a timer.

1. Set the tape deck's TIMER switch to OFF.
2. Turn on the receiver and set the appropriate switches for playback.
3. Turn on the tape deck and insert the recorded cassette.
4. Set the timer for the desired time. (At this point power to the connected equipment will be cut off.)
5. Set the tape deck's timer switch to PLAY. The tape deck is now ready to start playback at the time set on the timer.

Note

The tape deck's timer switch will function properly only if the tape deck is turned on **after** the switch is set to REC or PLAY. Do not change the setting of the timer switch during the four second stand-by period immediately after the power is turned on. If you want to change the setting of the switch, turn the power off first.

NOTES ON CASSETTES

To protect cassettes from accidental erasure

Remove the tab as illustrated so that the record mode does not function when the record button is pressed. To record on a cassette once tabs have been removed, simply cover the slot with plastic tape.

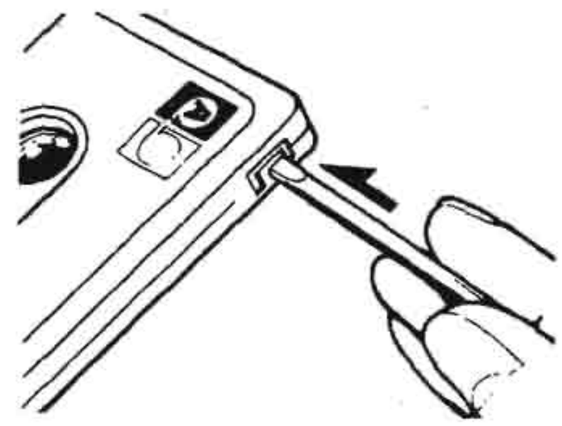

To protect side A recording

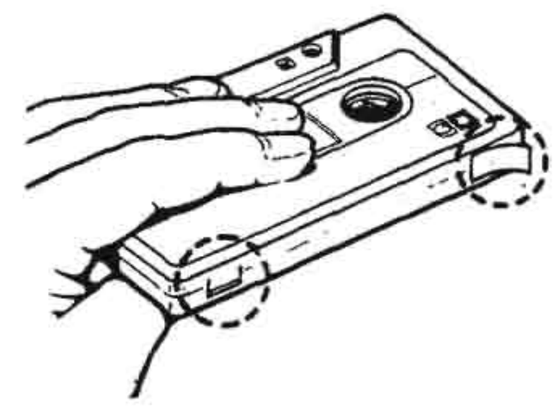

Do not stick any other material except on the portion marked.

Cassette care

- Avoid touching the tape surface of a cassette, as any dirt or dust will contaminate the heads.
- Do not stick thick labels or tape on the cassette, as this may affect proper cassette alignment and prevent the tape from making proper contact with the heads.
- Keep cassettes away from equipment with magnets, such as speakers and amplifiers, because their magnets could cause erasures or distortions of your recorded tapes.
- Protect cassettes from dust by storing them in their cases. Even minor dirt or dust could contaminate the heads, resulting in noise and sound drop-outs.
- Do not expose cassettes to direct sunlight, extremely cold temperature or moisture.
- Avoid fast-winding just before storing cassettes, as this may stretch the tape edge if the cassettes are left unused over a period of time.

1-4. PHOTO OF INNER SECTION

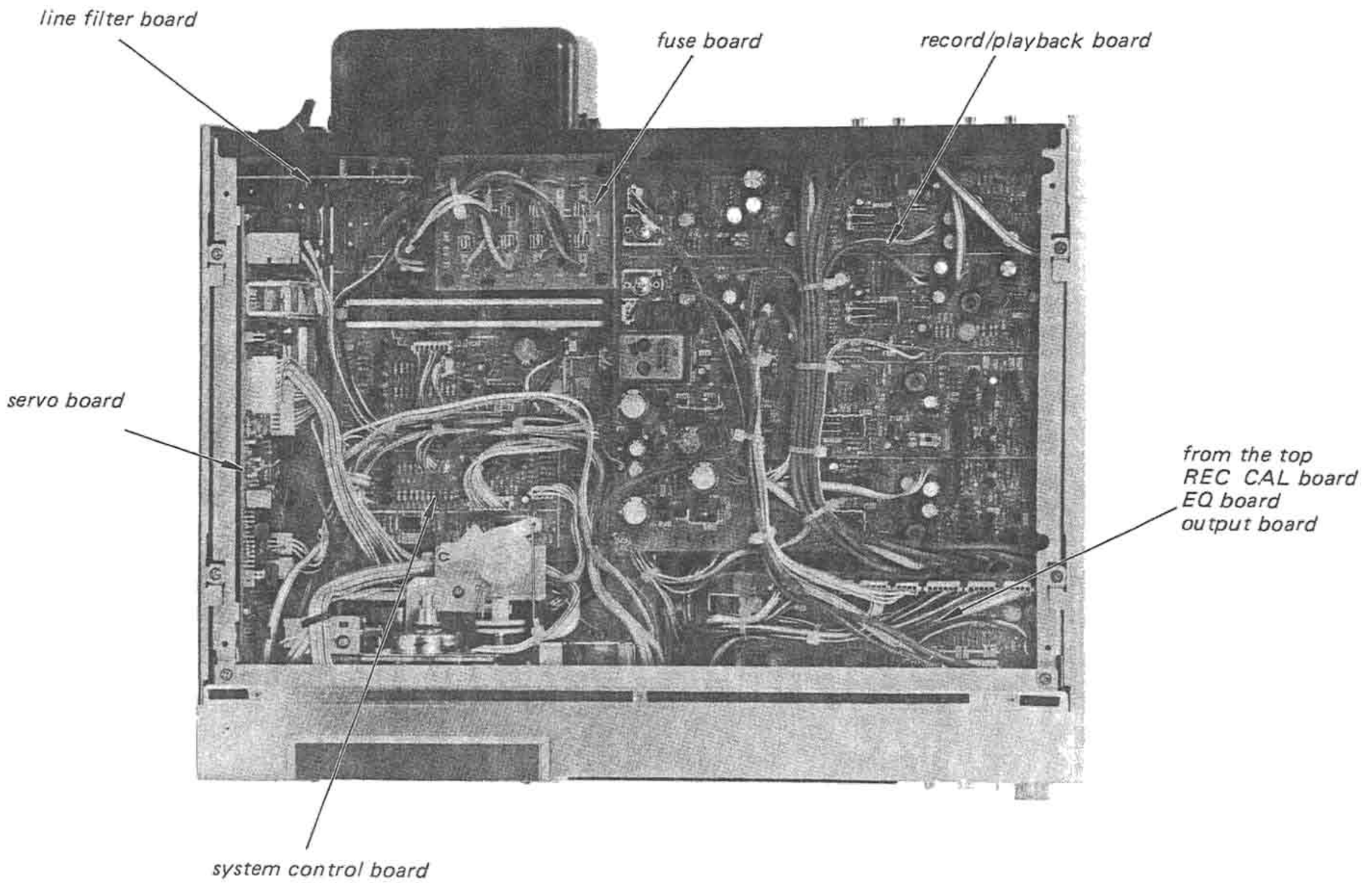

SECTION 2
DISASSEMBLY

Note: Follow the disassembly procedure in the numerical order given.

TOP COVER

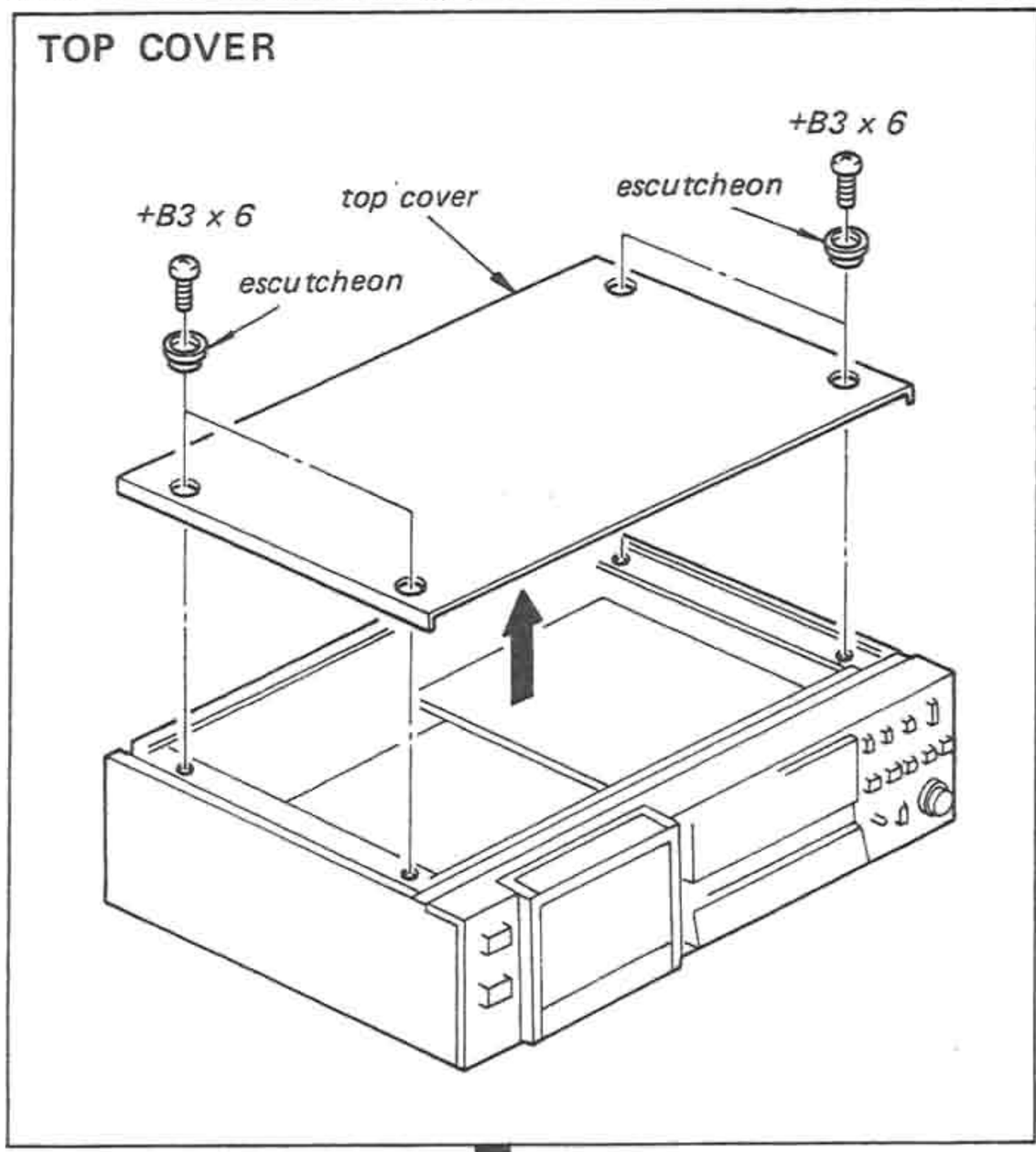

SERVO BOARD

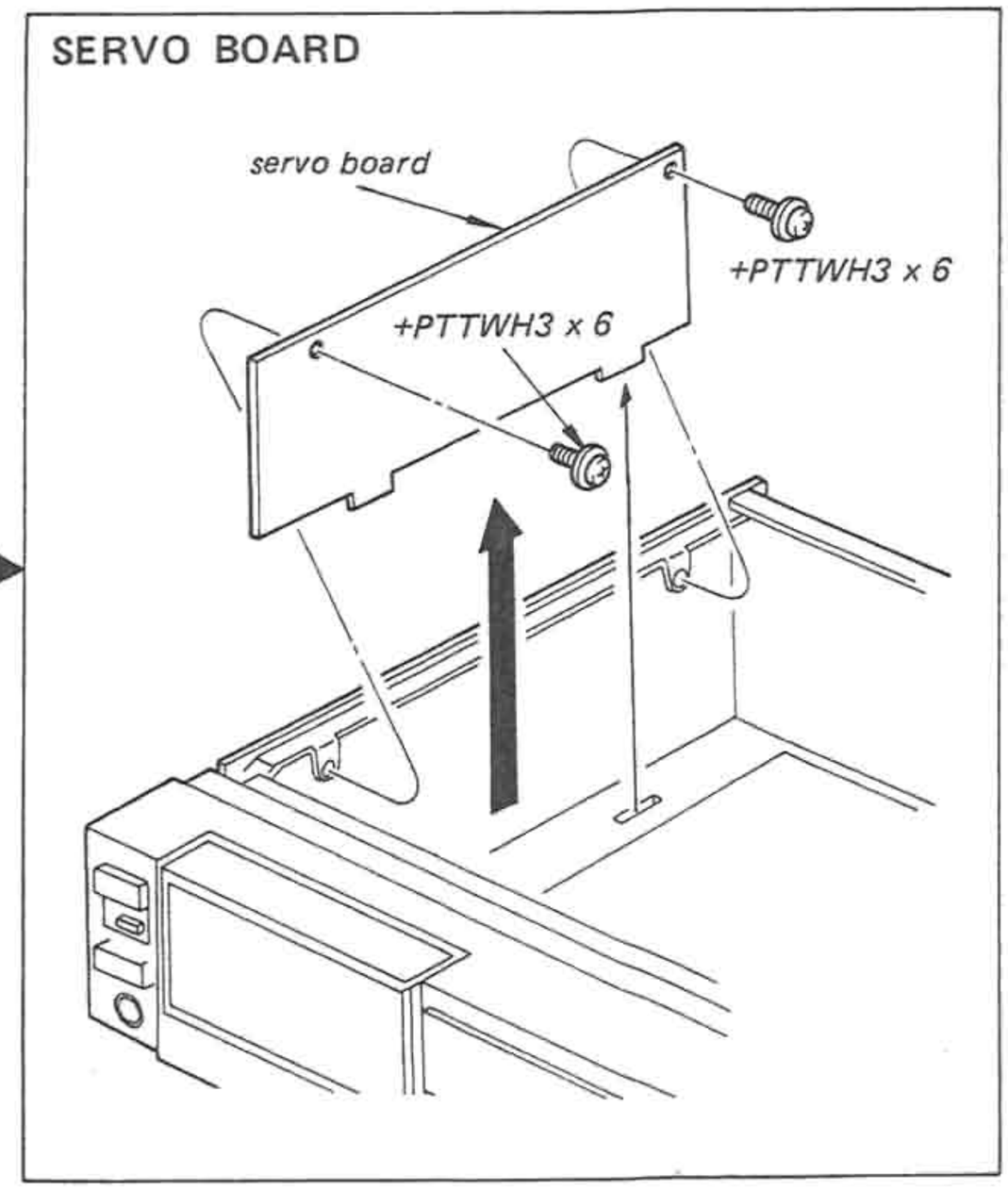

BOTTOM PLATE

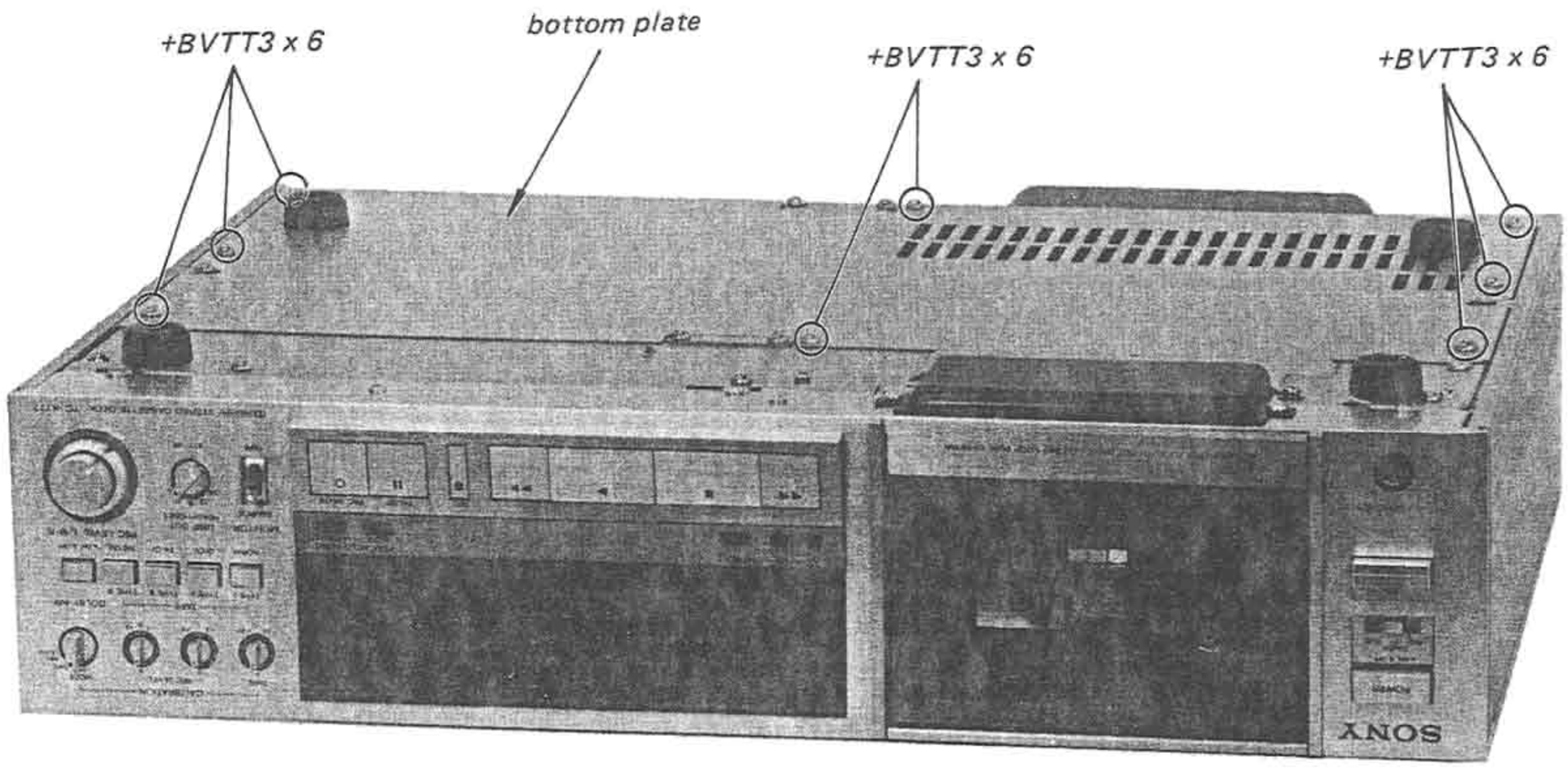

ORNAMENTAL SIDE PLATES

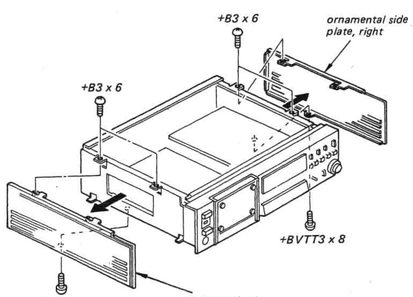

POWER TRANSFORMER

Serial No. up to 202,000

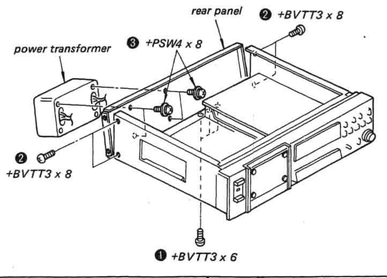

FUSE BOARD Serial No. 202,001 and later

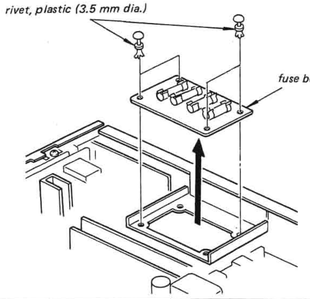

POWER TRANSFORMER/LINE FILTER BOARD

Line filter board : ❶ – ❺
Power transformer: ❶ – ❾

Serial No. 202,001 and later

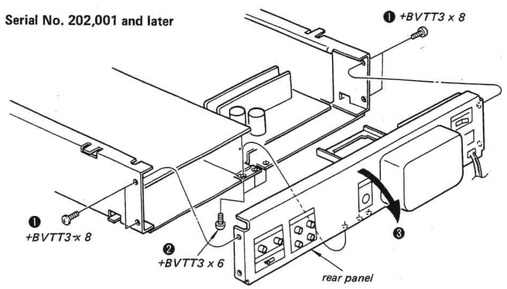

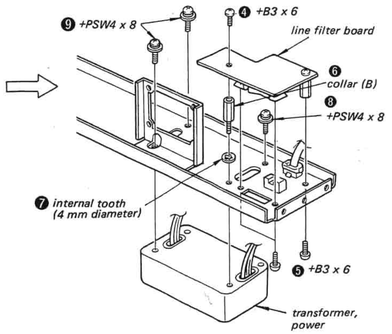

PANEL ASS'Y

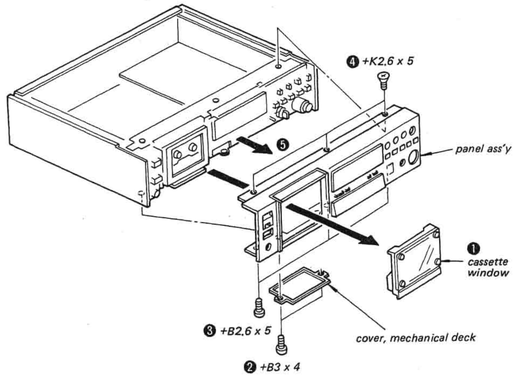

REC CAL BOARD/EQ BOARD/OUTPUT BOARD

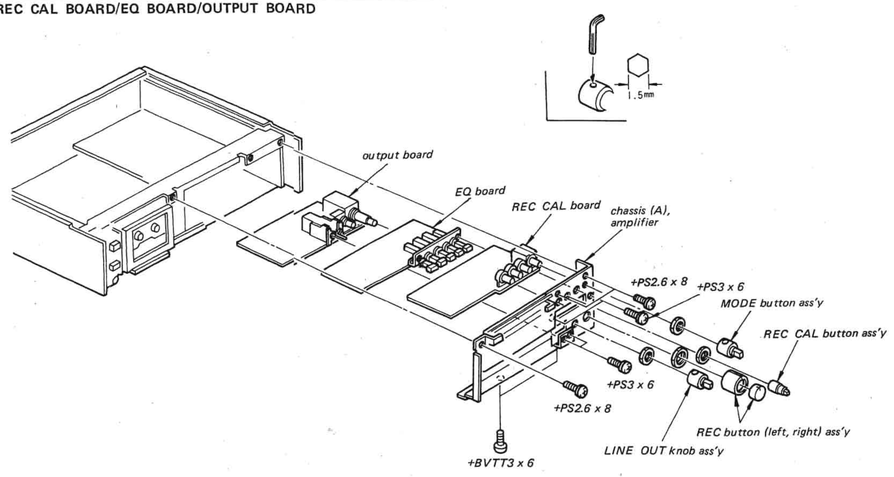

MECHANICAL DECK

❶ → ❷ → ❸ → ❹

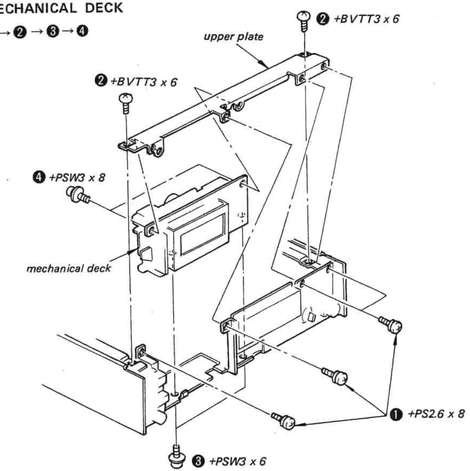

REAR VIEW

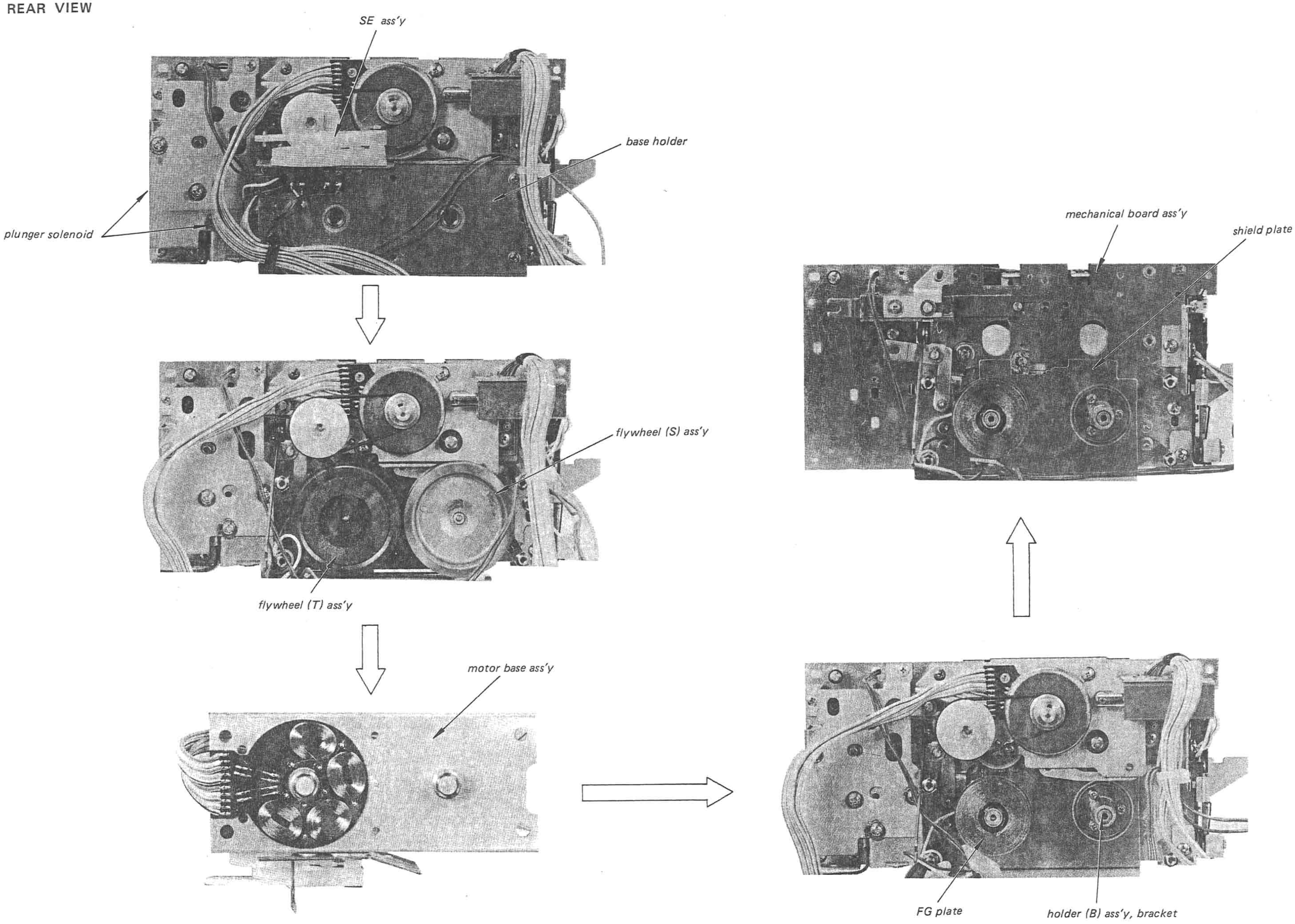
SE ass'y
base holder
plunger solenoid
flywheel (S) ass'y
flywheel (T) ass'y
motor base ass'y
mechanical board ass'y
shield plate
FG plate
holder (B) ass'y, bracket

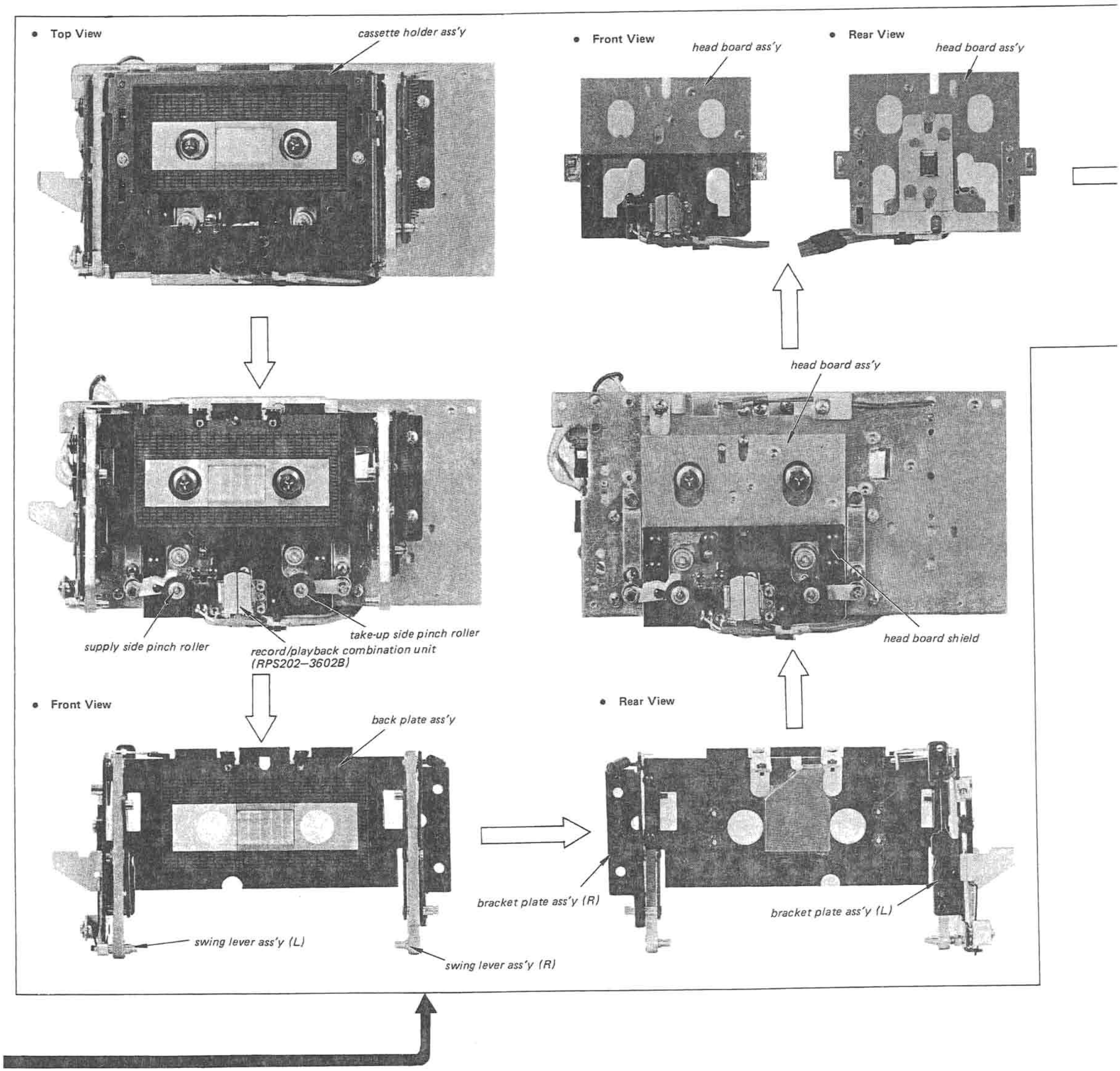
• Top View
cassette holder ass'y
supply side pinch roller
record/playback combination unit
(RPS202–3602B)
take-up side pinch roller
• Front View
head board ass'y
• Rear View
head board ass'y
head board ass'y
head board shield
• Front View
back plate ass'y
swing lever ass'y (L)
swing lever ass'y (R)
• Rear View
bracket plate ass'y (R)
bracket plate ass'y (L)

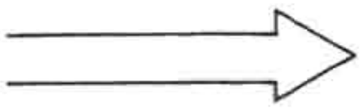

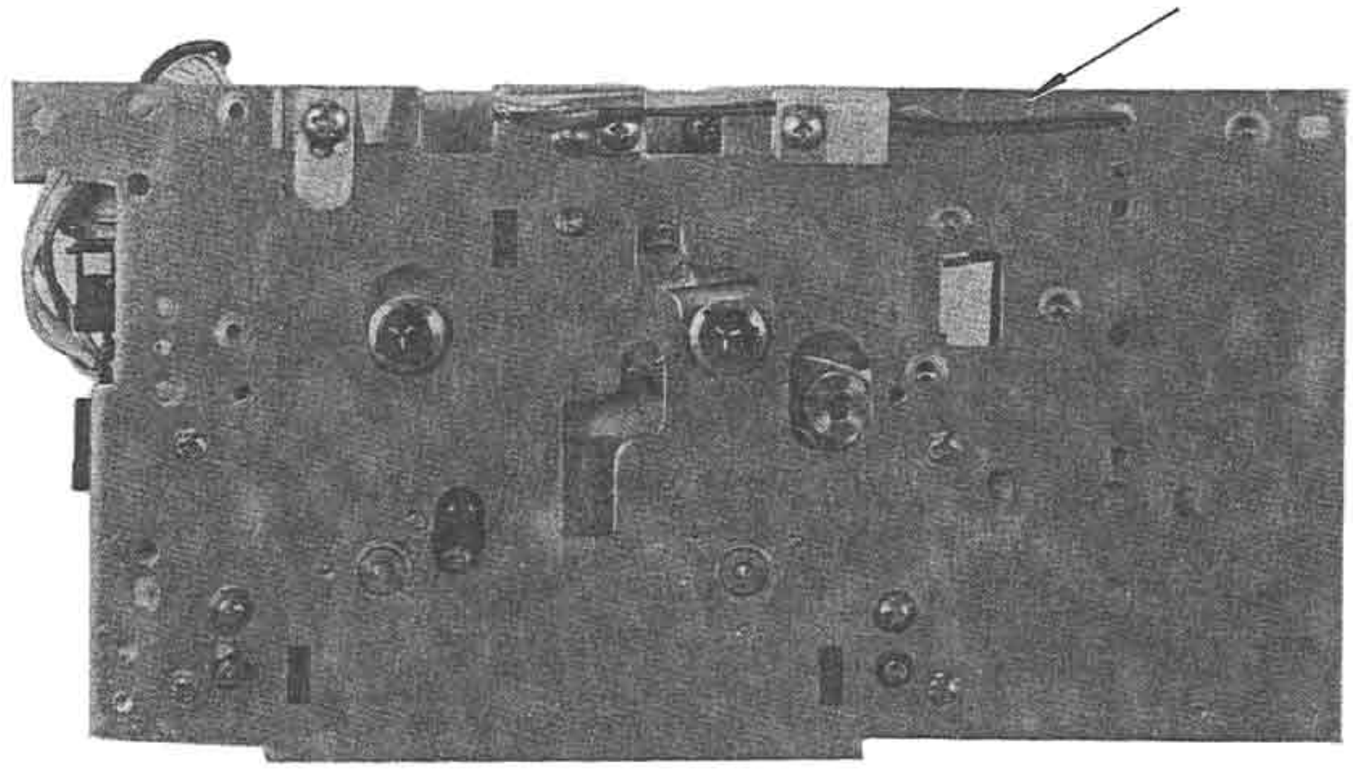

PHOTOS OF ASSEMBLED PARTS

- Upper Side

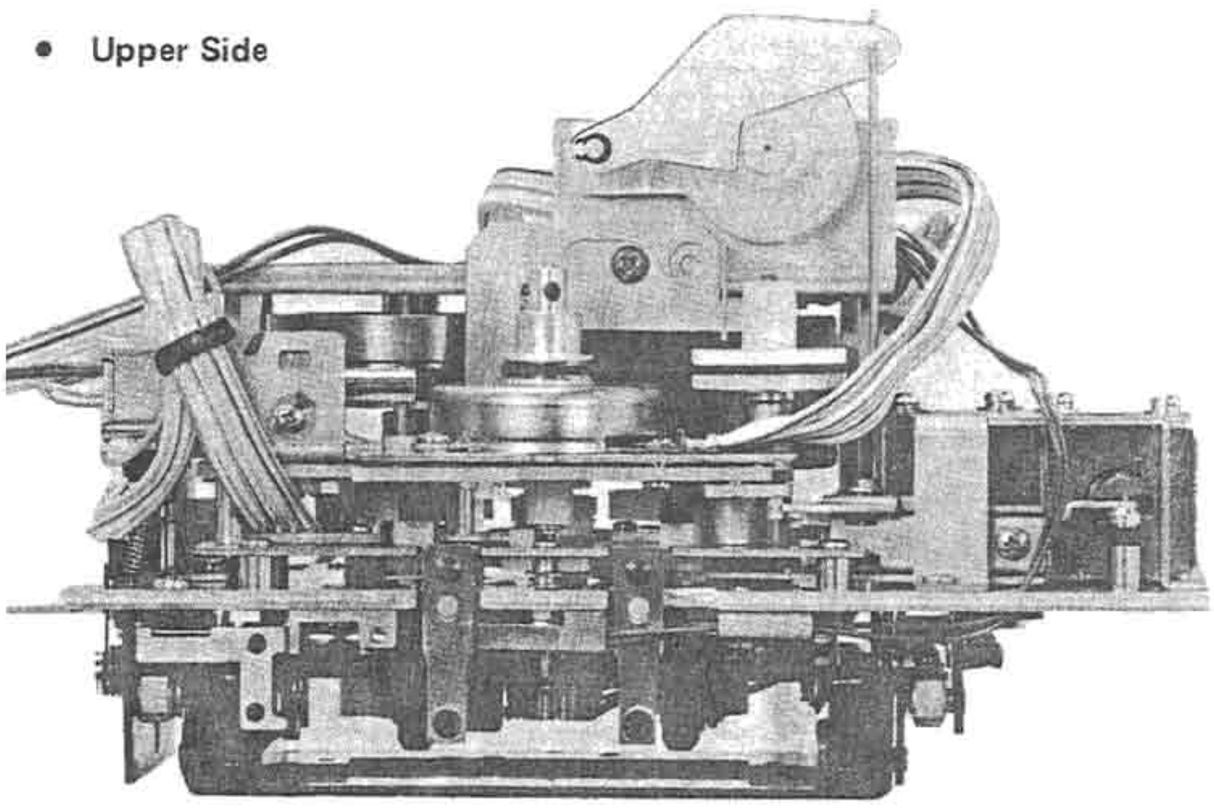

- Right Side

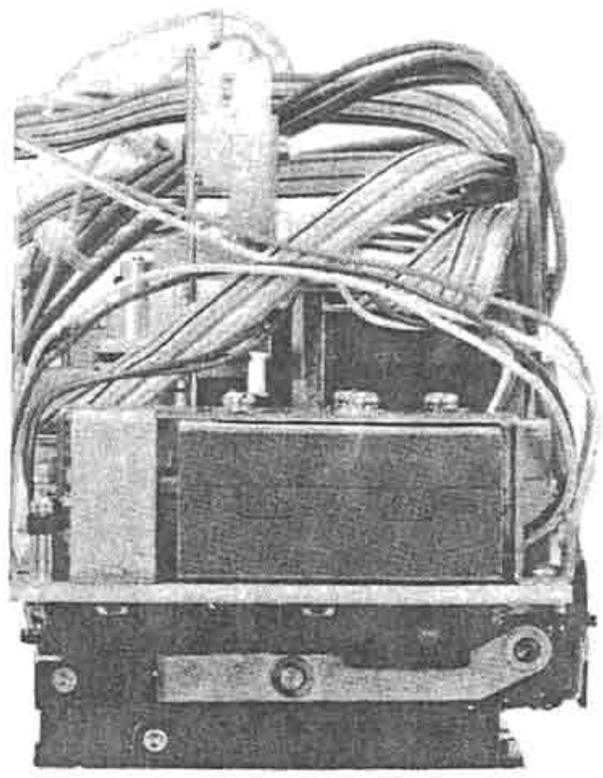

- Lower Side

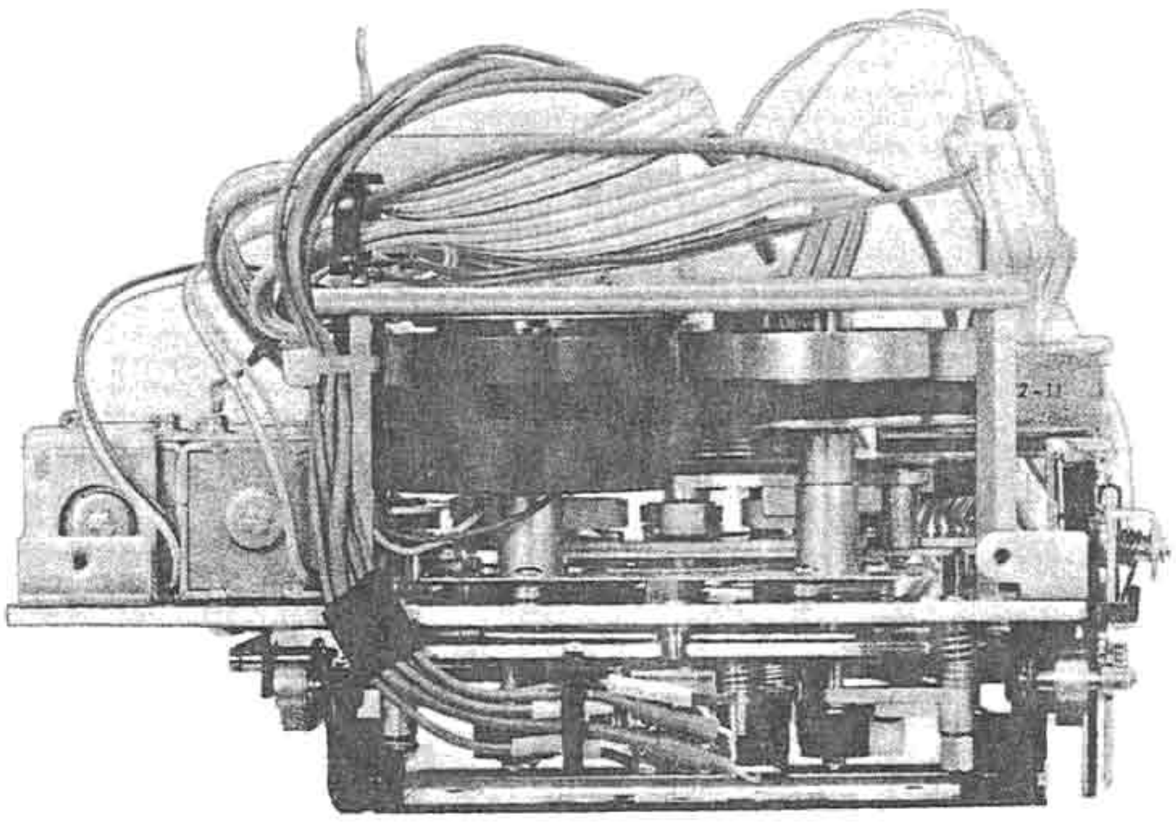

- Left Side

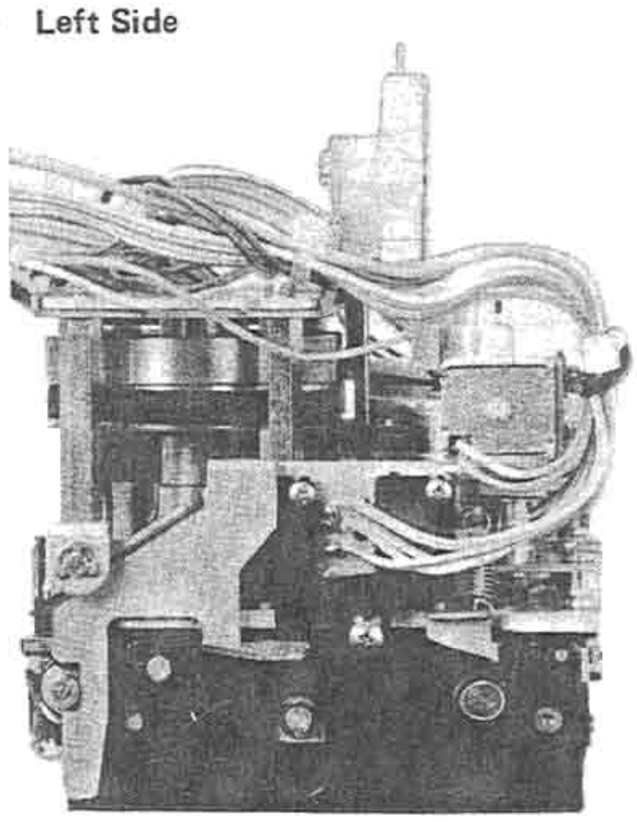

SECTION 3
ADJUSTMENTS

3-1. MECHANICAL ADJUSTMENTS

Precaution

1. Clean the following parts with a denatured alcohol-moistened swab.

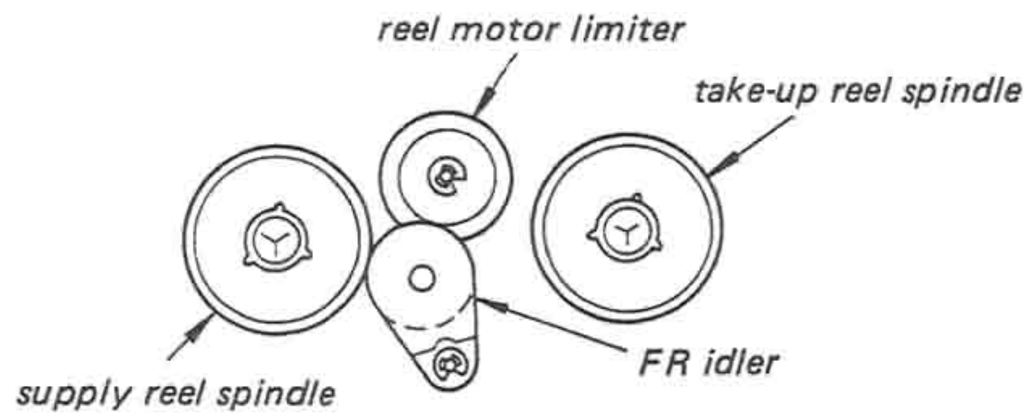

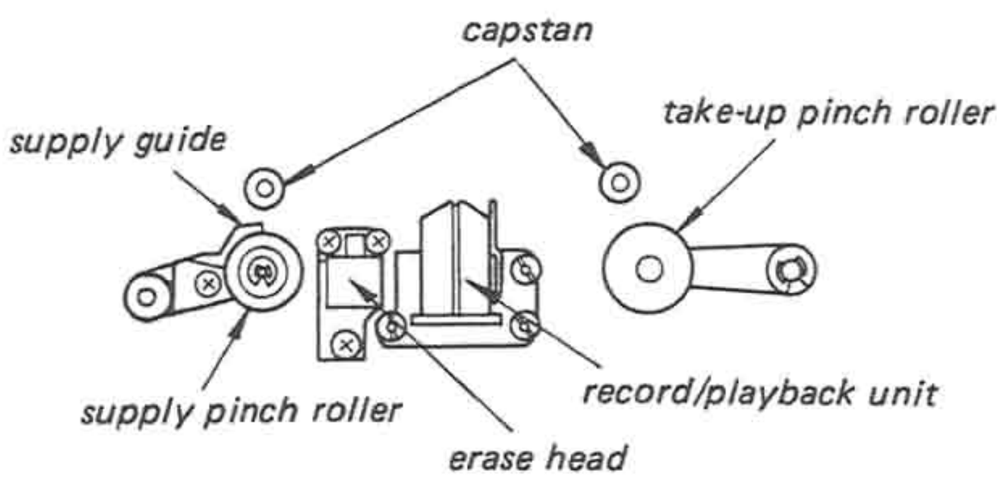

2. Demagnetize the record/playback head with a head demagnetizer.
3. Do not use a magnetized screwdriver for the adjustments.

Pinch Roller Pressure Adjustment

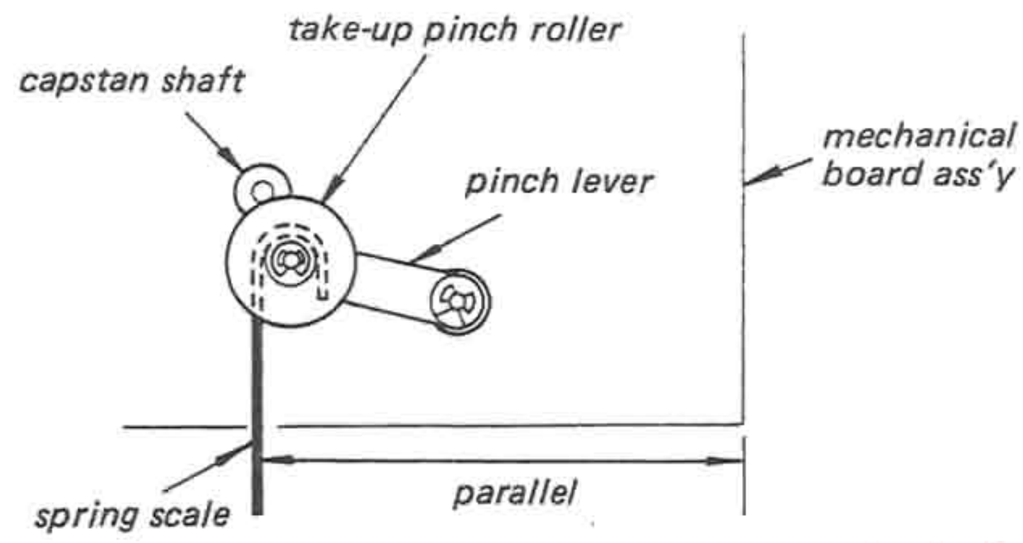

1. Make sure that the capstan shaft and pinch roller are parallel.
2. In forward mode, pull the spring scale slowly so that it is parallel to the surface of the mechanical board ass'y and read the spring scale when the pinch roller stops rotating.

Specification

	pinch roller pressure
take-up side	220 – 380 g
supply side	180 – 280 g

3. If necessary, change the position of pinch roller plunger. (Refer to Pinch Roller/Head Plunger Position Adjustment on page 28.)

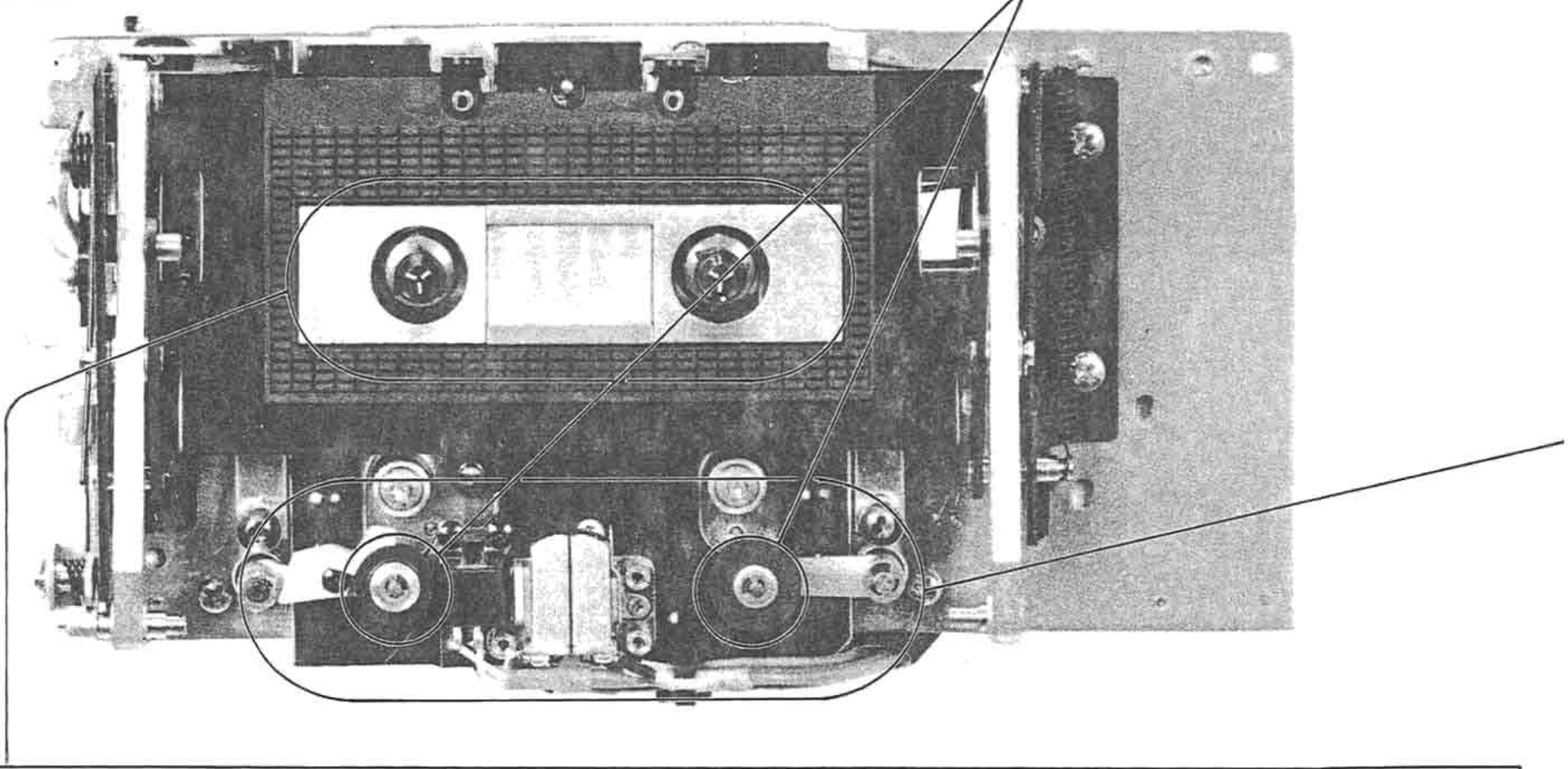

Brake Torque Adjustment

Specification

Tight side:	100 — 200 g·cm(1.4 — 2.8 oz·inch)
Slack side:	less than 90 g·cm(1.3 oz·inch)

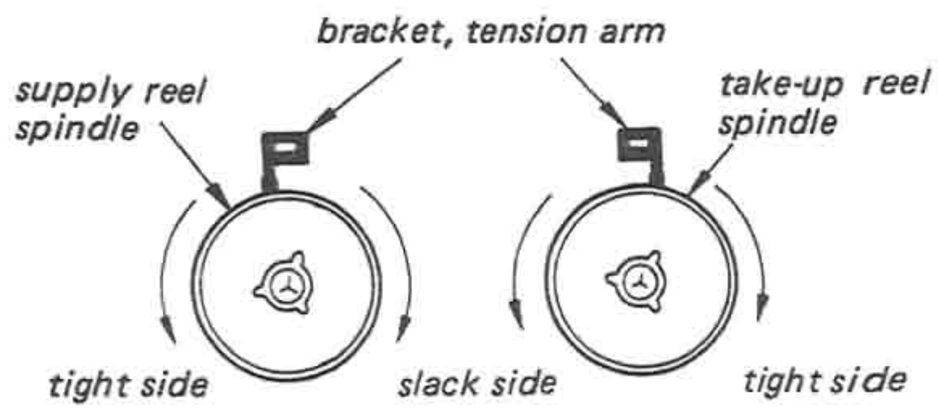

Cassette Holder Operation

1. Insert a cassette tape (C-90 with erasure prevention tab) into the cassette holder and push the portion shown by the arrow. Make sure that the cassette holder is locked, the GB lever ass'y is lowered and the lock arm returns completely.
2. Make sure that the cassette holder opens smoothly in 0.6 —1.5 seconds.

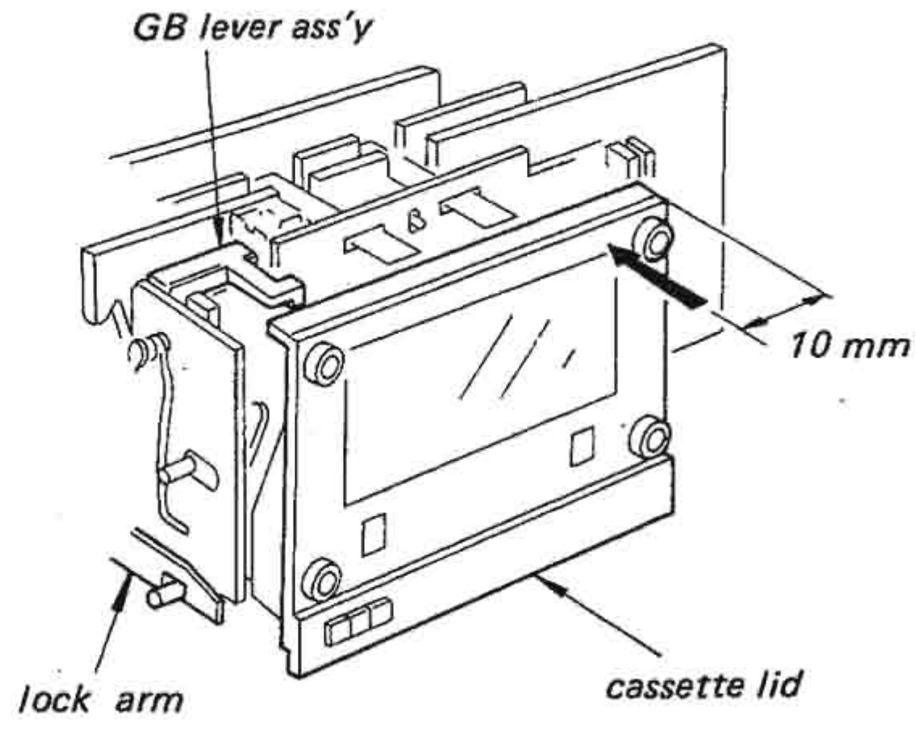

Head Height Adjustment

1. Make an adjustment cassette as shown below or use a mirror cassette.

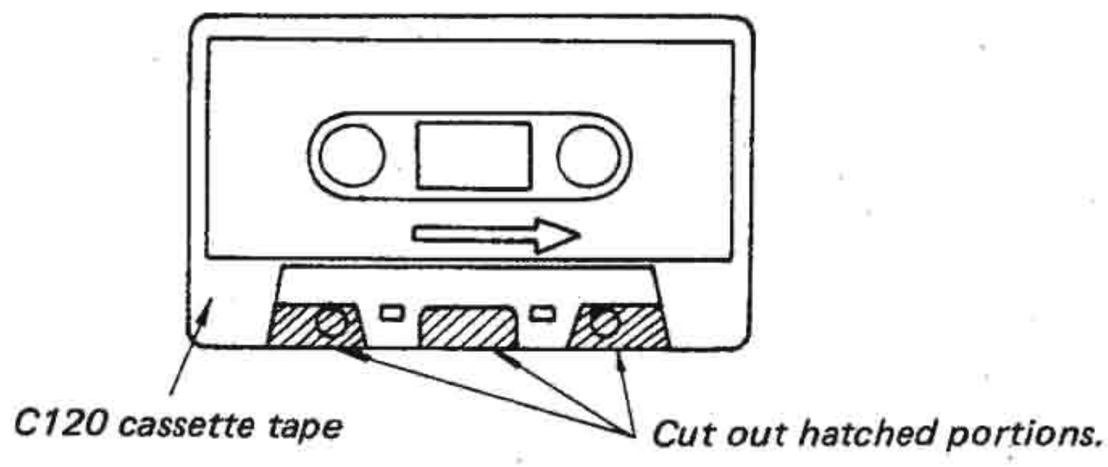

2. Install the mirror cassette (or adjustment cassette) in the set. In playback mode, the tape should not curl at the portions shown by arrows (tape guides) in Fig. a.
   If the tape curls, adjust the height of tape guide of supply pinch roller.

Adjustment locations:

adjustment screw of tape curl in Fig. b
(Be careful not to turn the screw more than 1/2 turn.)

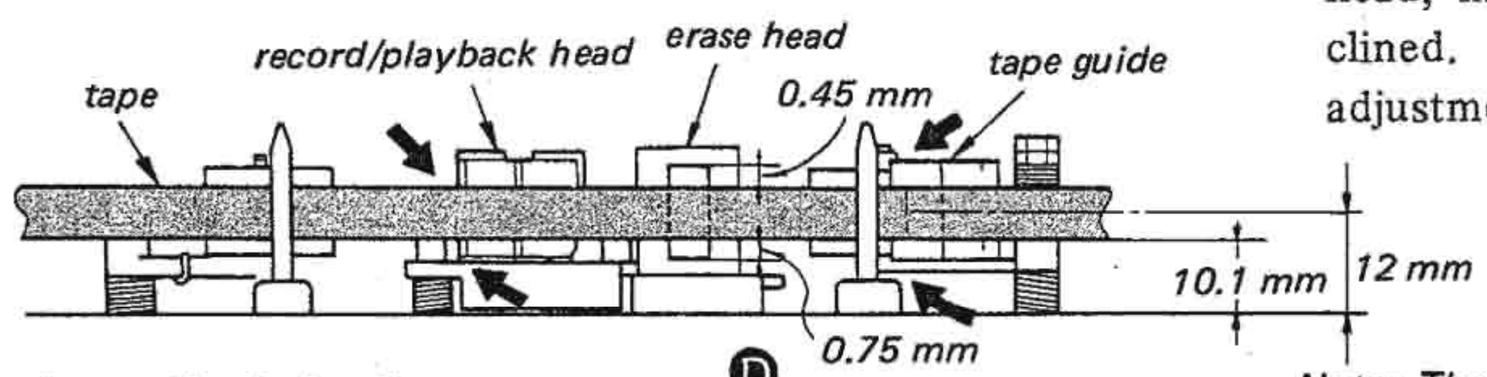

Fig. a

Note: The values shown are for reference purposes.

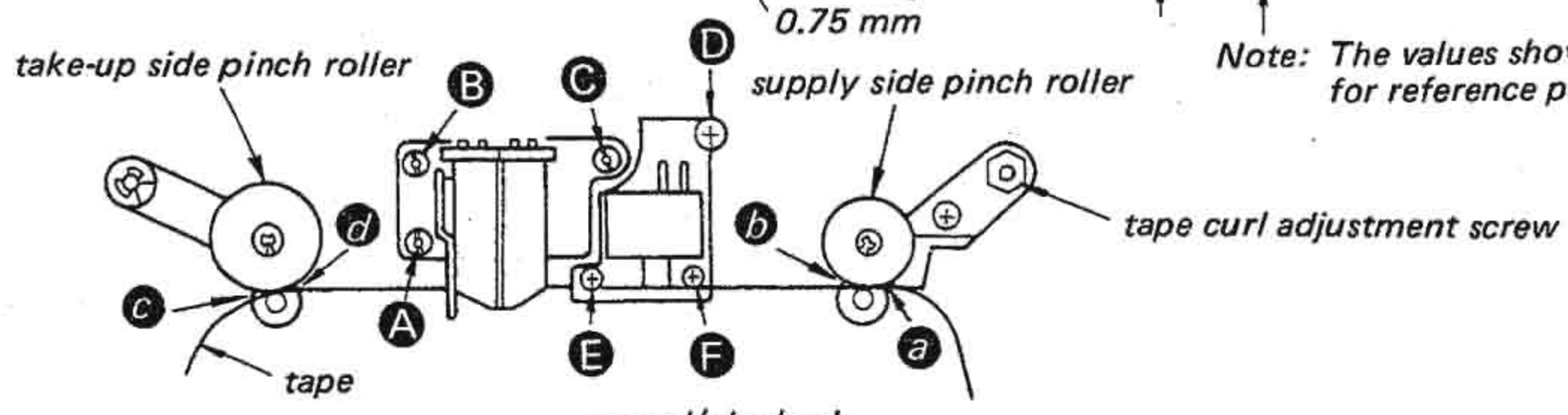

Fig. b

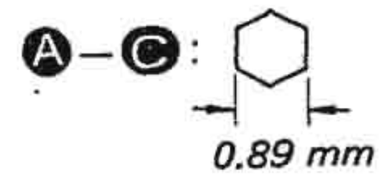

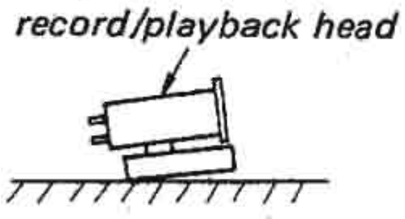

Fig. c

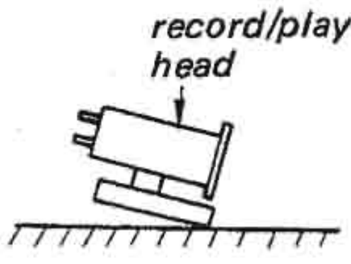

Fig. d

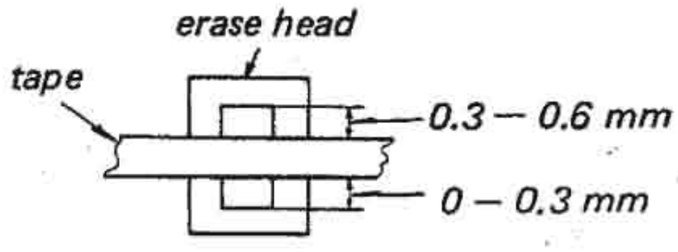

Fig. e

3. Back tension: 0
   Make sure that there is no tape twist at portions ⓐ — ⓓ .
   1. When the tape twists upwards:
      Turn adjustment screws Ⓑ , Ⓒ of the record/playback head and recline the head as shown in Fig. C.
   2. When the tape twists downwards:
      Turn adjustment screws Ⓑ , Ⓒ and recline the head as shown in Fig. D.
4. Measure the height of erase head.
   If it is out of the range indicated in Fig. e, follow the procedures below.
   1. When the height of erase head is out of the range:
      Loosen screws Ⓔ , Ⓕ of the erase head and adjust the height by the adjustment shim of the erase head.
      erase head adjustment shim
      3-576-835-01 t=0.1 mm
      3-576-835-11 t=0.2 mm
   2. After adjusting the height of the erase head, make sure that the head is not inclined. If necessary, loosen or tighten adjustment screw Ⓓ .

Pinch Roller/Head Plunger Position Adjustment

1. Position the head plunger so that clearance Ⓐ is 0.3 mm.
2. Move the head plunger and the pinch roller plunger and adjust the position of the pinch roller plunger so that the pin pressure spring can move in the range of 0.8 mm — 1.2 mm.
3. Lock the plunger screw with suitable locking compound.

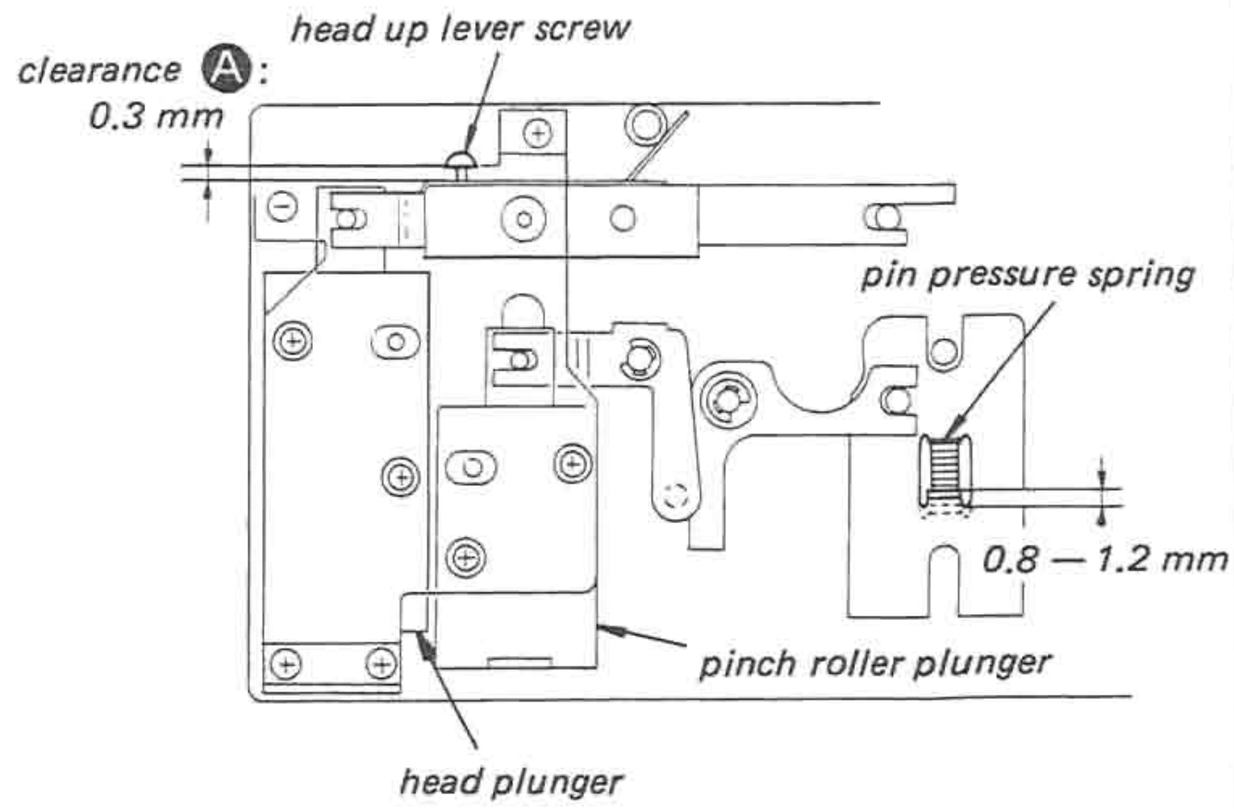

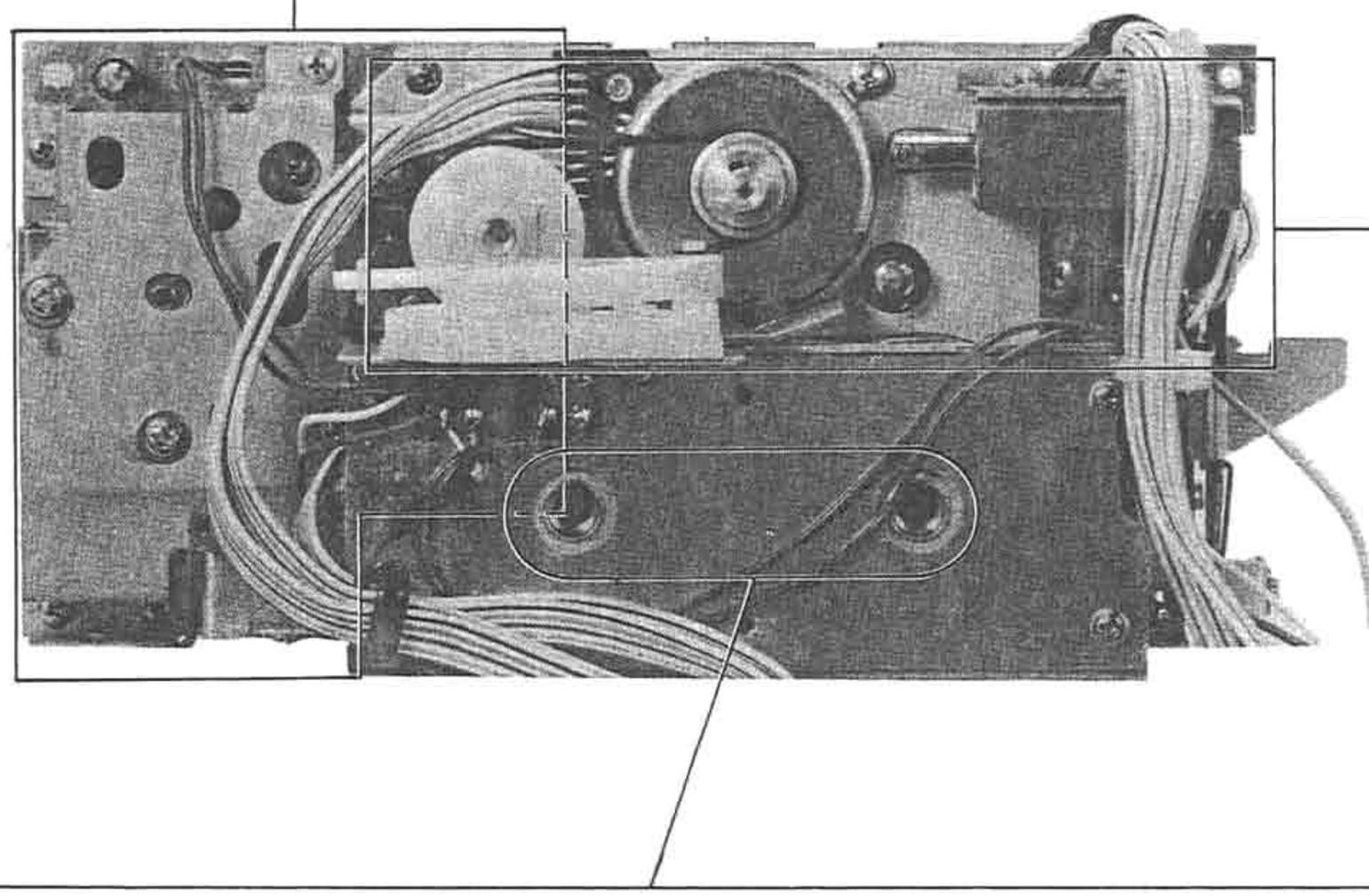

Take-up Side/Supply Side Flywheel Thrust Adjustment

1. Take-up Side Flywheel
   Insert a spacer of 2.4 mm between the flywheel magnet and motor board and adjust the position of the magnet so that clearance Ⓐ is between 2.3 mm and 2.5 mm.
2. Supply Side Flywheel
   Tighten the thrust adjustment screw lightly till the flywheel does not move and then loosen it by 1/2 – 3/4 turns.
3. After the adjustment, lock the adjustment screw with suitable locking compound.

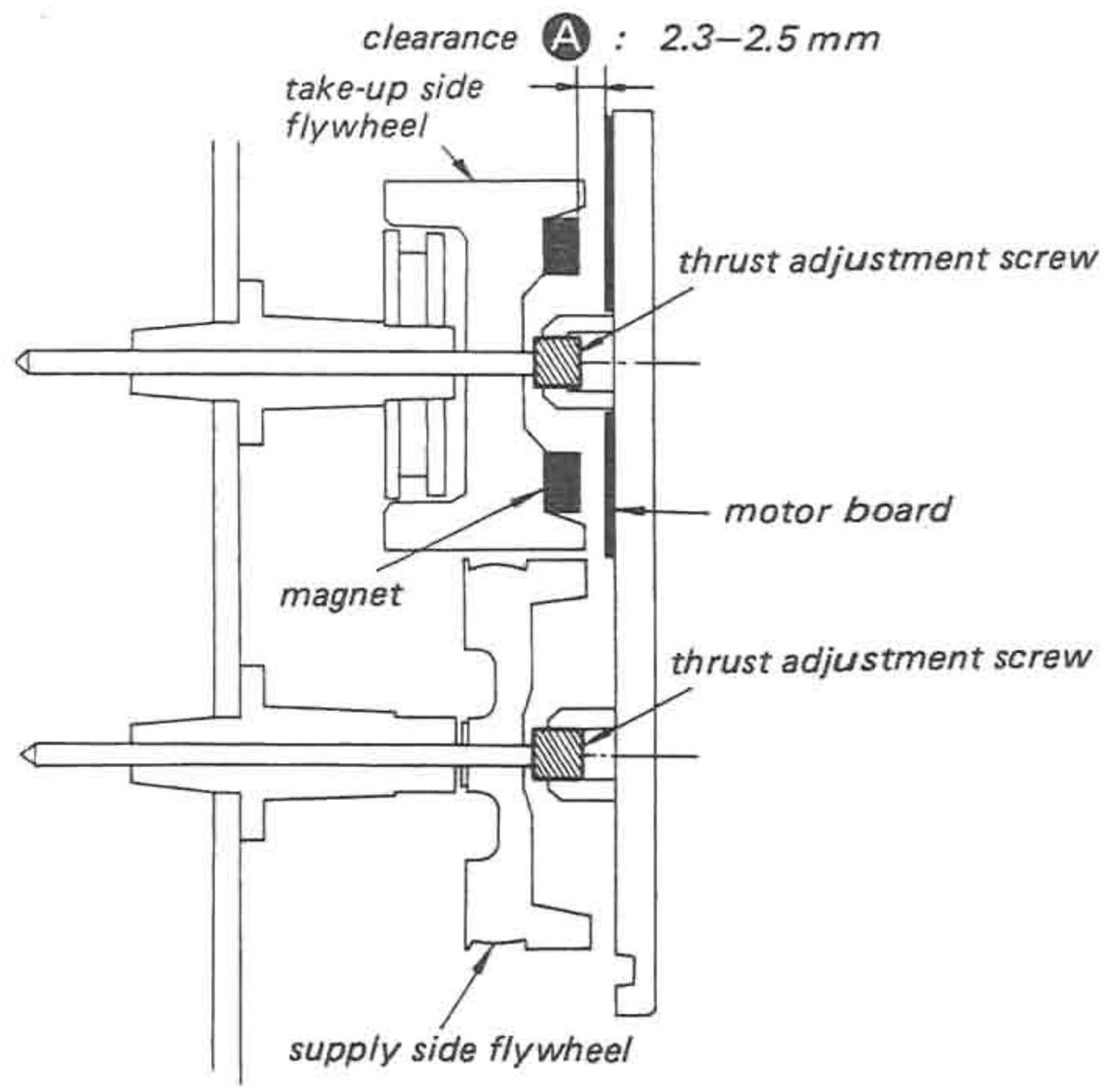

Forward Torque/Back Tension Torque Adjustment

1. Loosen adjustment screws of the forward torque and back tension torque till the magnet holder does not move and then tighten them by 1/2 turn.
2. Connect the cassette torque meter (CQ-102B) and measure forward torque and back tension. If they do not meet the specifications, adjust the back tension adjustment screw.

Specifications:

forward torque	35 – 45 g·cm
back tension torque	7 – 9 g·cm

3. Lock the adjustment screw with suitable locking compound.

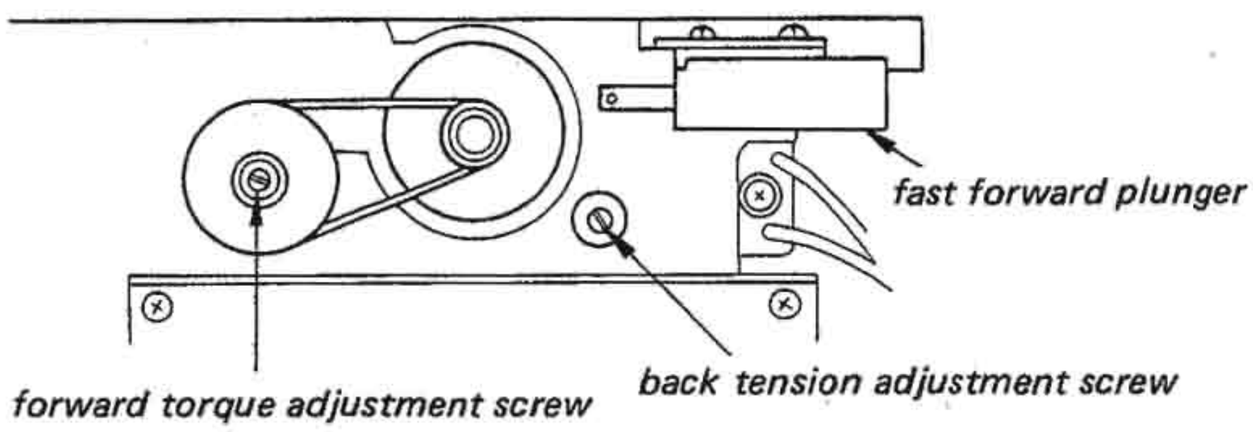

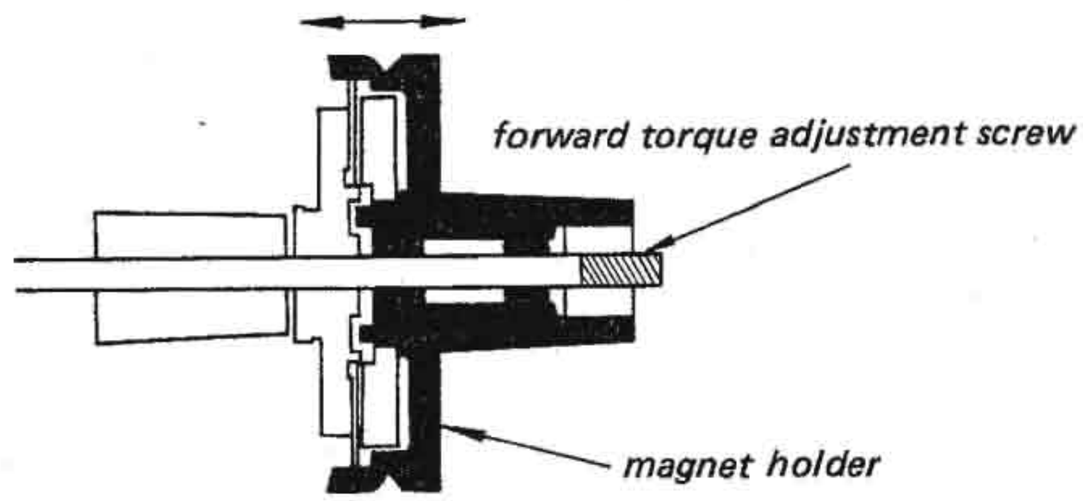

Check of BT Stopper Position

1. Loosen the BT stopper adjustment screw, push the mode select lever in the direction of arrow Ⓐ and fix the BT stopper to the reel spindle with the adjustment screw.
2. Move the brake arm in the direction of arrow Ⓑ, remove the brake from the reel spindle and confirm that the BT drum does not rotate together with the reel spindle.
3. Make sure that the clearance between the mode select lever and the brake arm is more than 1 mm when the mode select lever returns to its original position.

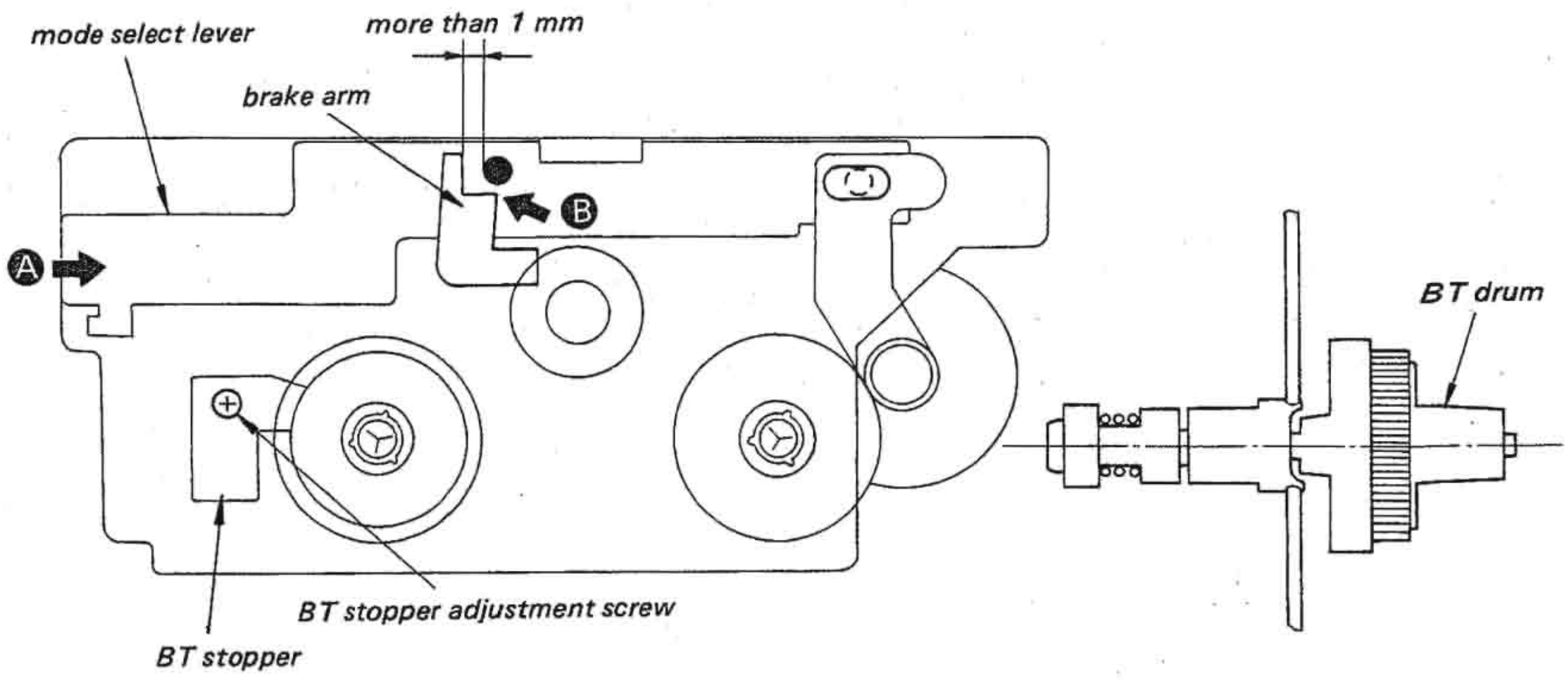

Fast Forward Plunger Position Adjustment

1. Push the fast forward plunger.
2. Turn the reel motor clockwise (fast forward mode). When the idler and the reel spindle come into contact, adjust the position of the fast forward plunger by loosening the screw so that the clearance between the FR arm and the mode selector lever pin is between 0.4 mm and 0.6 mm.
3. Next, turn the reel motor counterclockwise (rewind mode) and adjust to obtain the same result as in step 2.
4. Lock the screw with suitable locking compound.

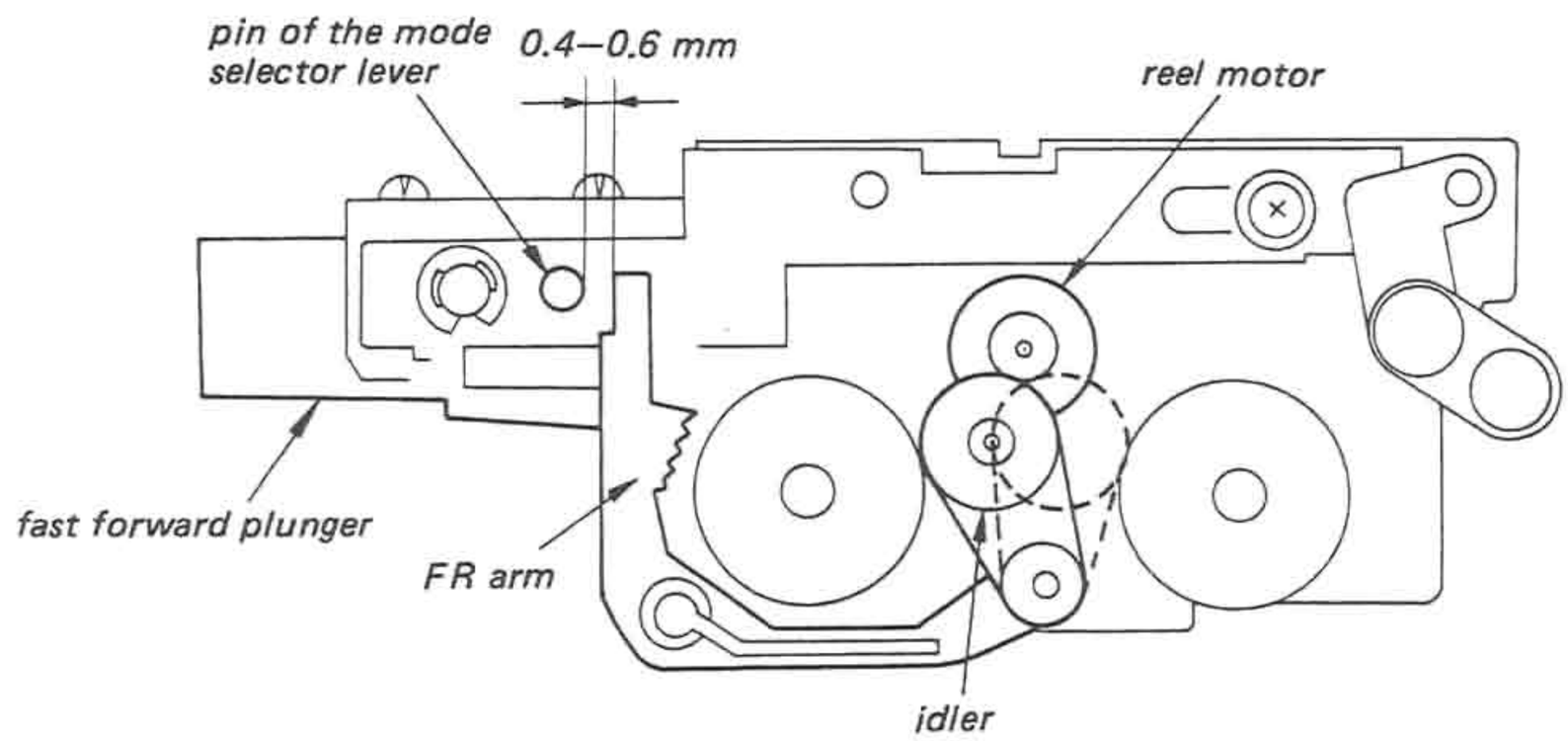

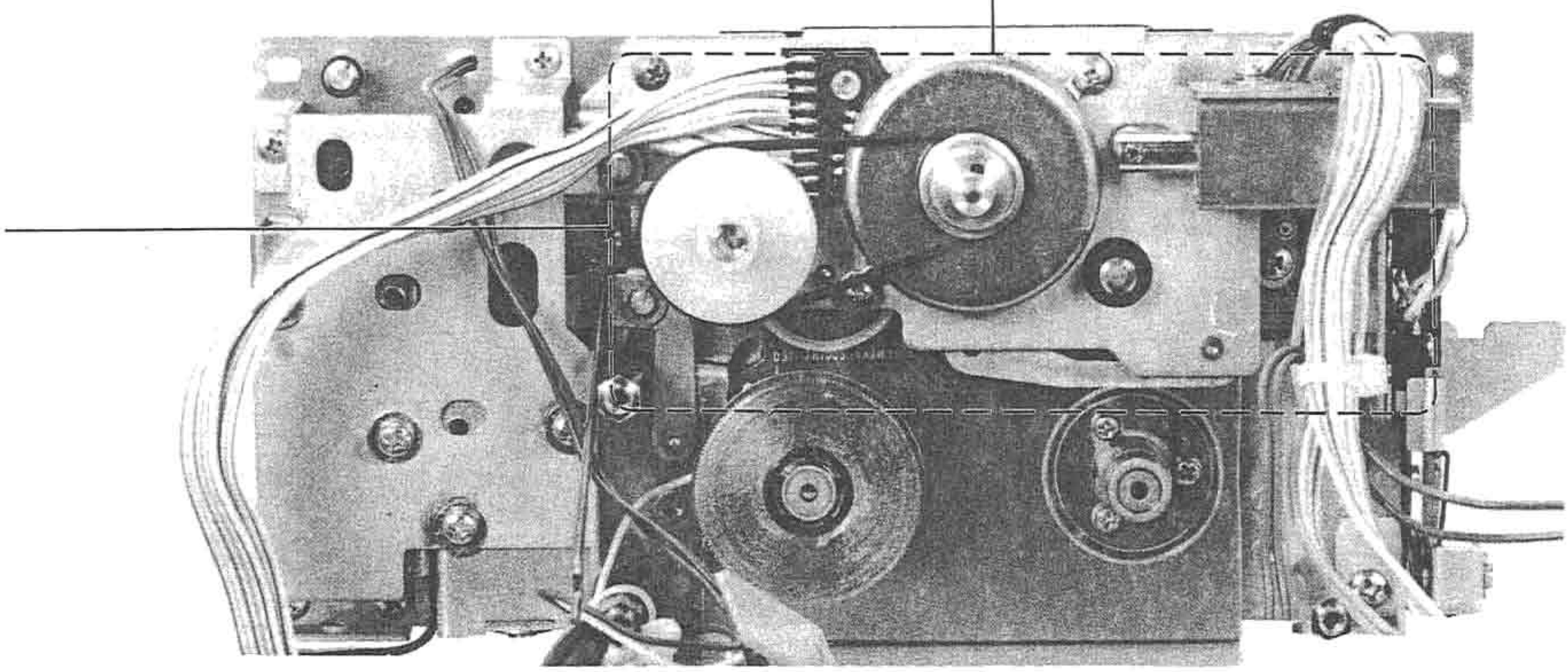

3-2. ELECTRICAL ADJUSTMENTS

Note: The adjustment should be performed in the order given in this service manual. The adjustments should be performed for both L-CH and R-CH.

- Set the TAPE switch according to the test tape as follows.

Tape	TAPE Switch
CS-15	TYPE I
CS-25	TYPE II
CS-30	TYPE III
CS-40	TYPE IV

- Switches and controls should be set as follows unless otherwise specified.

CALIBRATION MODE ..... OFF
REC LEVEL (L/R) ..... MED
CALIBRATION BIAS
REC LEVEL ..... MED
DOLBY NR ..... OFF
TAPE ..... TYPE I
LINE OUT ..... 0 dB
MONITOR ..... SOURCE
TIMER ..... OFF

- Standard Record:

Deliver the standard input signal level to the input jack and set the REC LEVEL control to obtain the standard output signal level.

Standard Input Level

Input Terminal	LINE IN
source impedance	10 kΩ
input level	0.25 V (−10 dB)

Standard Output Level

Output Terminal	LINE OUT	HEADPHONES
load impedance	47 kΩ	8 Ω
output level	0.44 V (−5 dB)	39 mV (−26 dB)

1. Record/playback Head Azimuth Adjustment

Procedure:

1. Loosen the head-holding screw.
2. Mode: playback

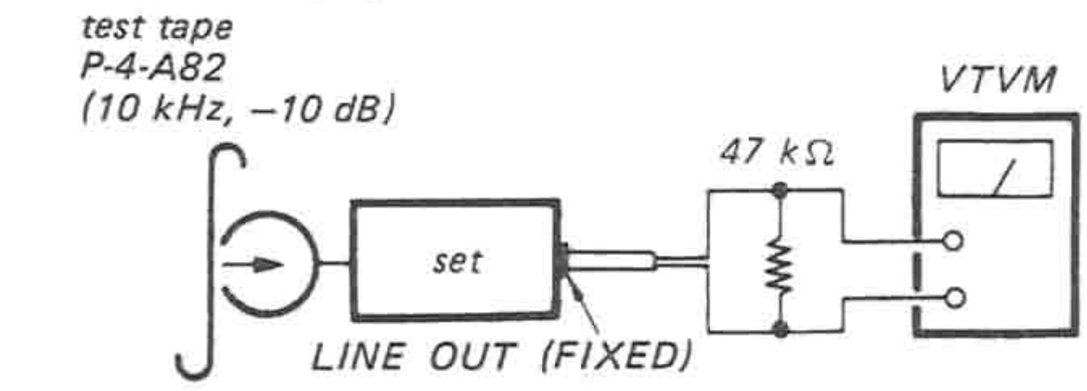

3. Turn the adjustment screw for the maximum output levels. If these levels do not match, turn the adjustment screw until both of output levels match together within 0.5 dB.

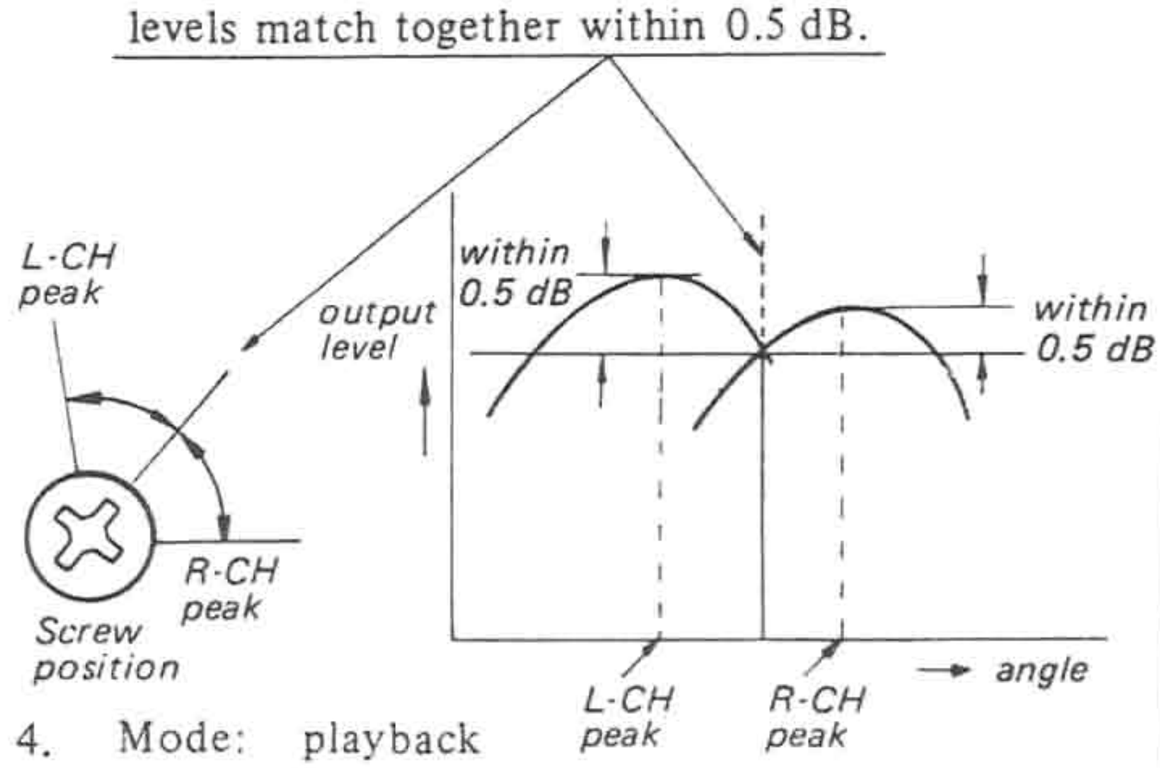

4. Mode: playback

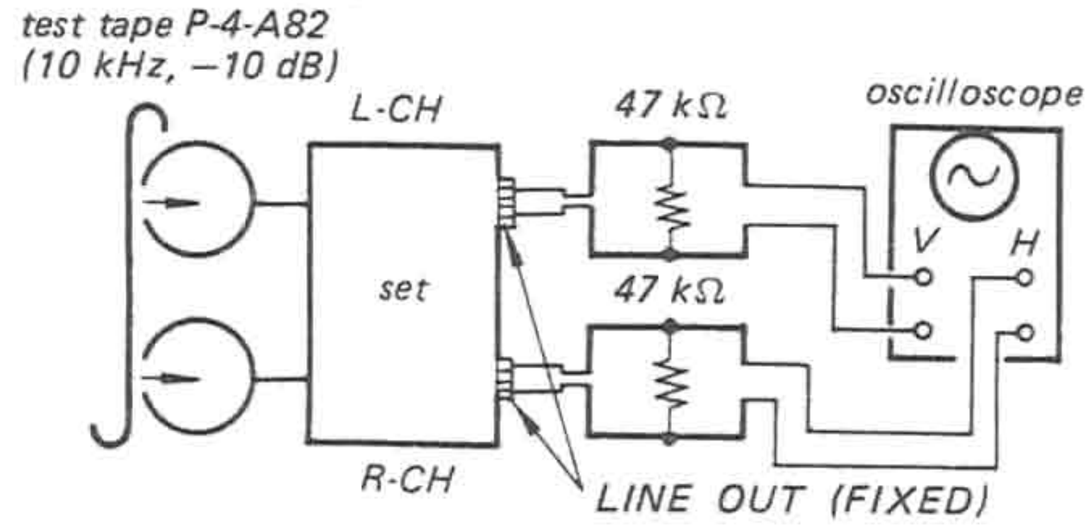

Adjust the adjustment screw for a good pattern.

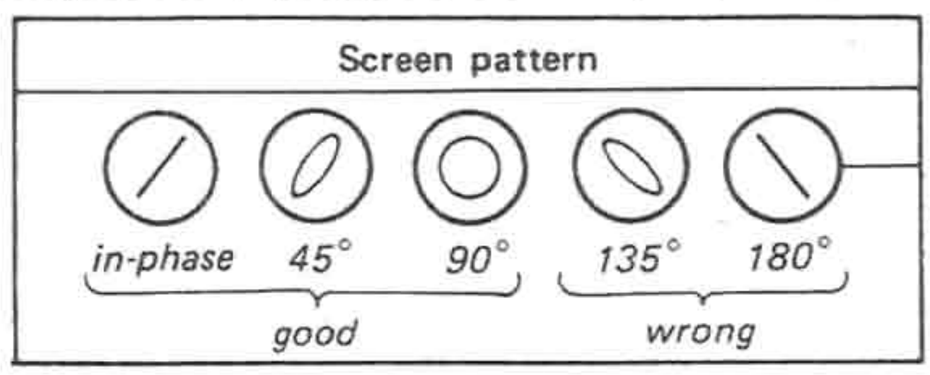

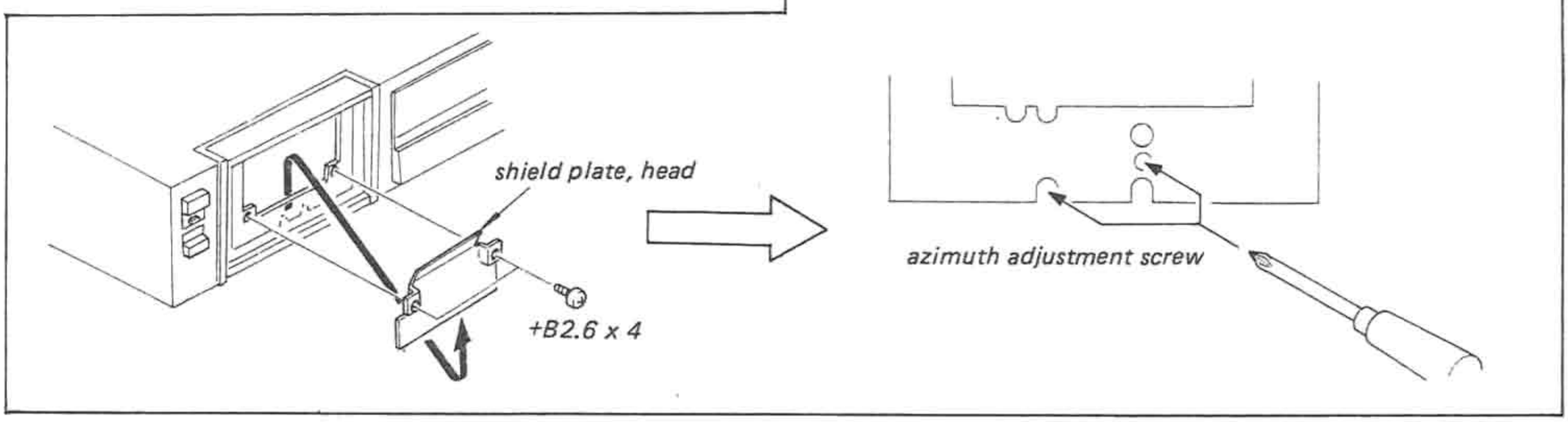

2. Speed Detecting Head Adjustment

Procedure:

1. Install blank cassette tape CS-15 and set the unit in fast-forward or rewind mode.
2. Connect an oscilloscope to the test points as follows.
3. Adjust RV801 and RV802.

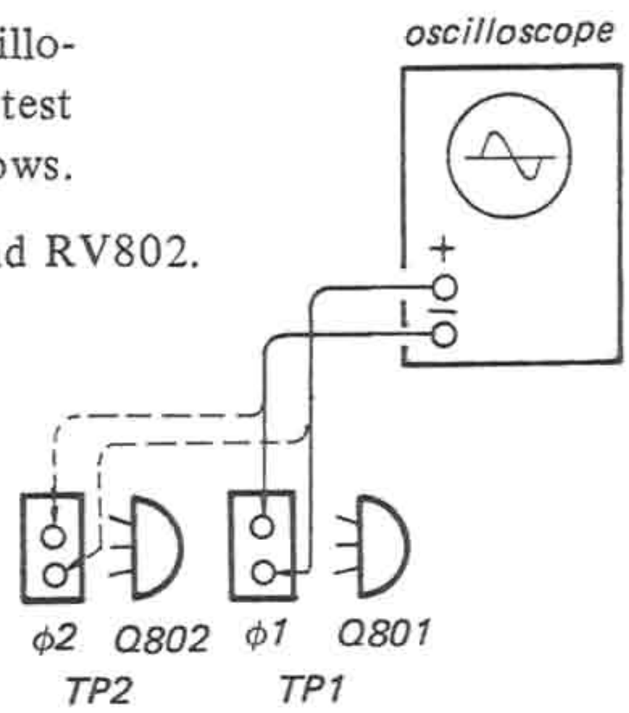

Specification:

Oscilloscope Connection	Adjust	Waveform
TP1 (φ1)	RV801	A B A = B (both within ±10 %)
TP2 (φ2)	RV802	

Adjustment Location:

– system control board –

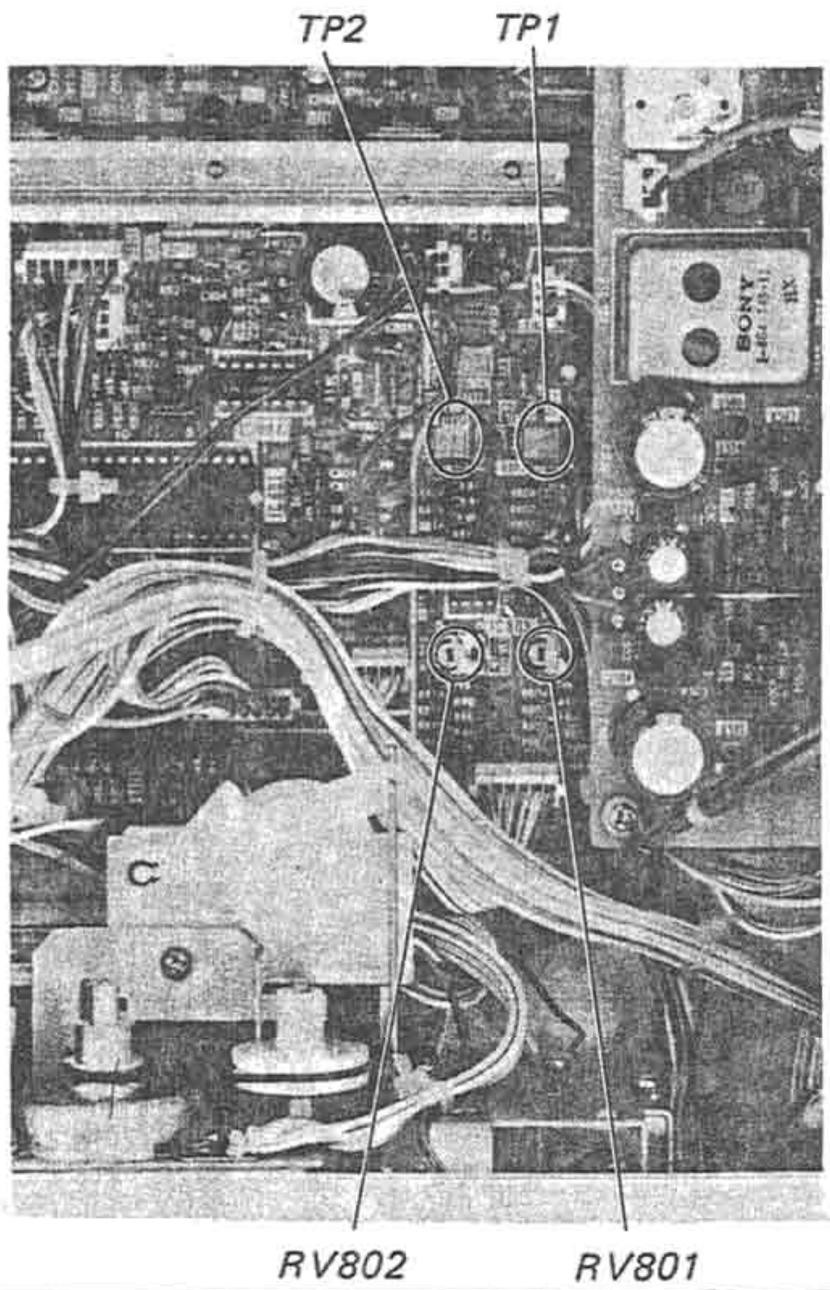

3. Capstan Motor Adjustment

Setting:

POWER switch: ON

Mode: stop

Procedure:

1. Set S601 to DC side (full-counterclockwise position).
2. Connect an oscilloscope to the test points as follows.

Connection

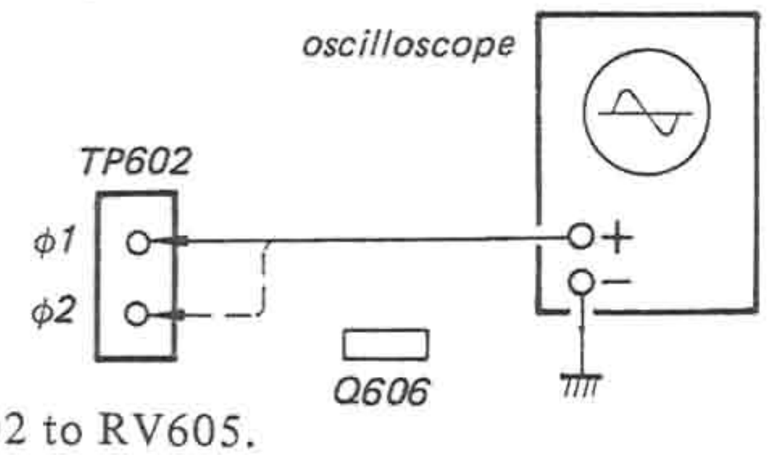

3. Adjust RV602 to RV605.

GAIN

Oscilloscope Connection	Adjust	Waveform
TP602 (φ1)	RV602	A A = 3.6 – 4.4 V p-p
TP602 (φ2)	RV604	

OFFSET

Oscilloscope Connection	Adjust	Waveform
TP602 (φ1)	RV603	0 V
TP602 (φ2)	RV605	

4. Set S601 to SERVO side (full-clockwise position).
5. Connect an oscilloscope to the test points as follows.

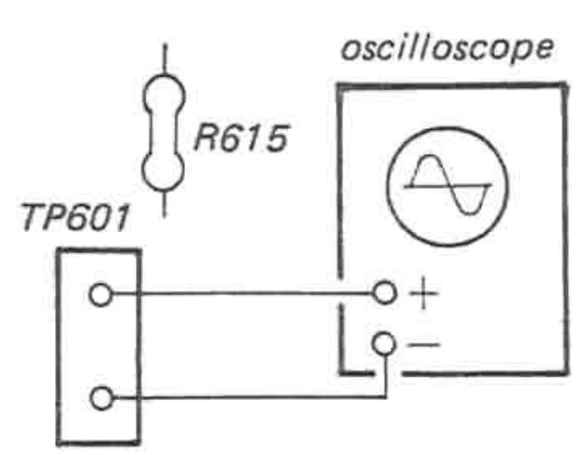

6. Adjust RV601 to obtain square waveforms as shown below.

Specification:

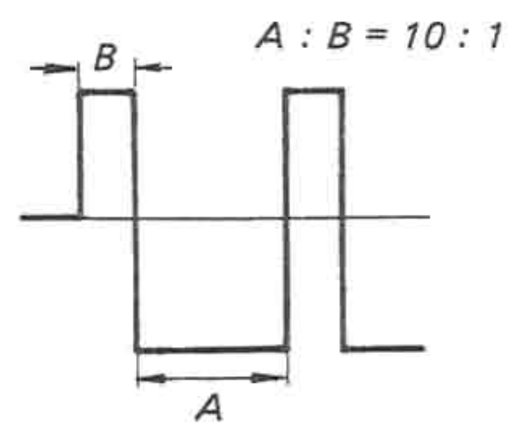

Adjustment Location:

– servo amp board –

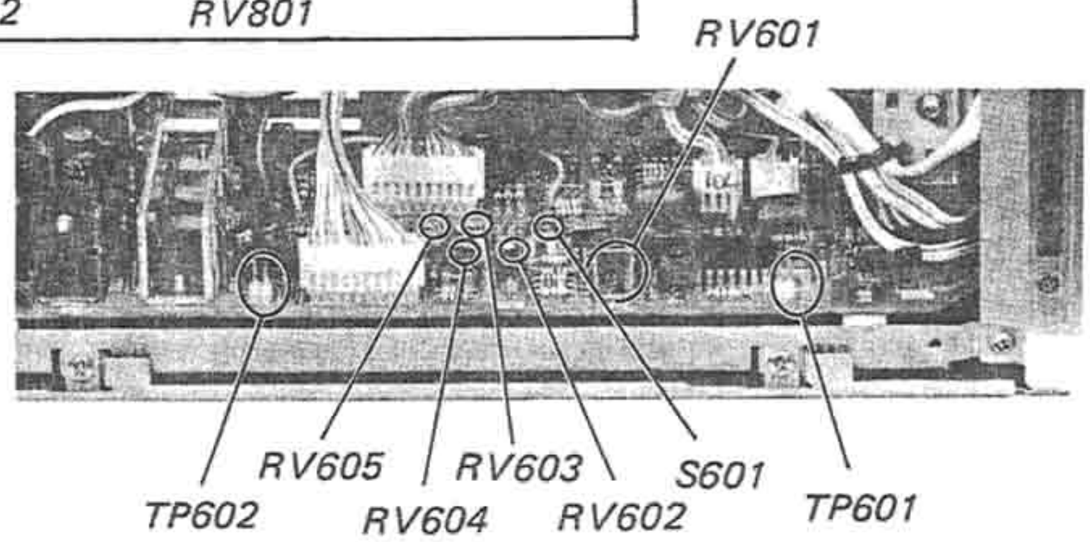

4. Reel Motor Adjustment

Procedure:

1. Set the unit in playback mode with a tape cassette installed.
2. Adjust RV702 so that the output frequency of TP701 is between 48 and 52 Hz.
3. Remove the cassette and adjust RV703 so that output frequency of TP701 in rewind mode is the same as that in fast forward mode.
4. Adjust RV701 so that output frequency of TP701 is 140 – 144 Hz.

Connection:

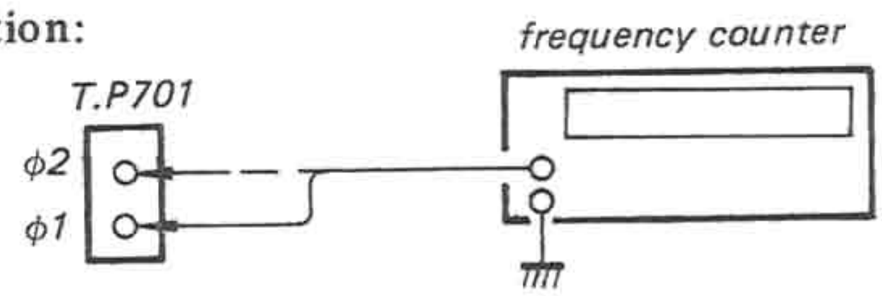

Adjustment Location:

– servo amp board –

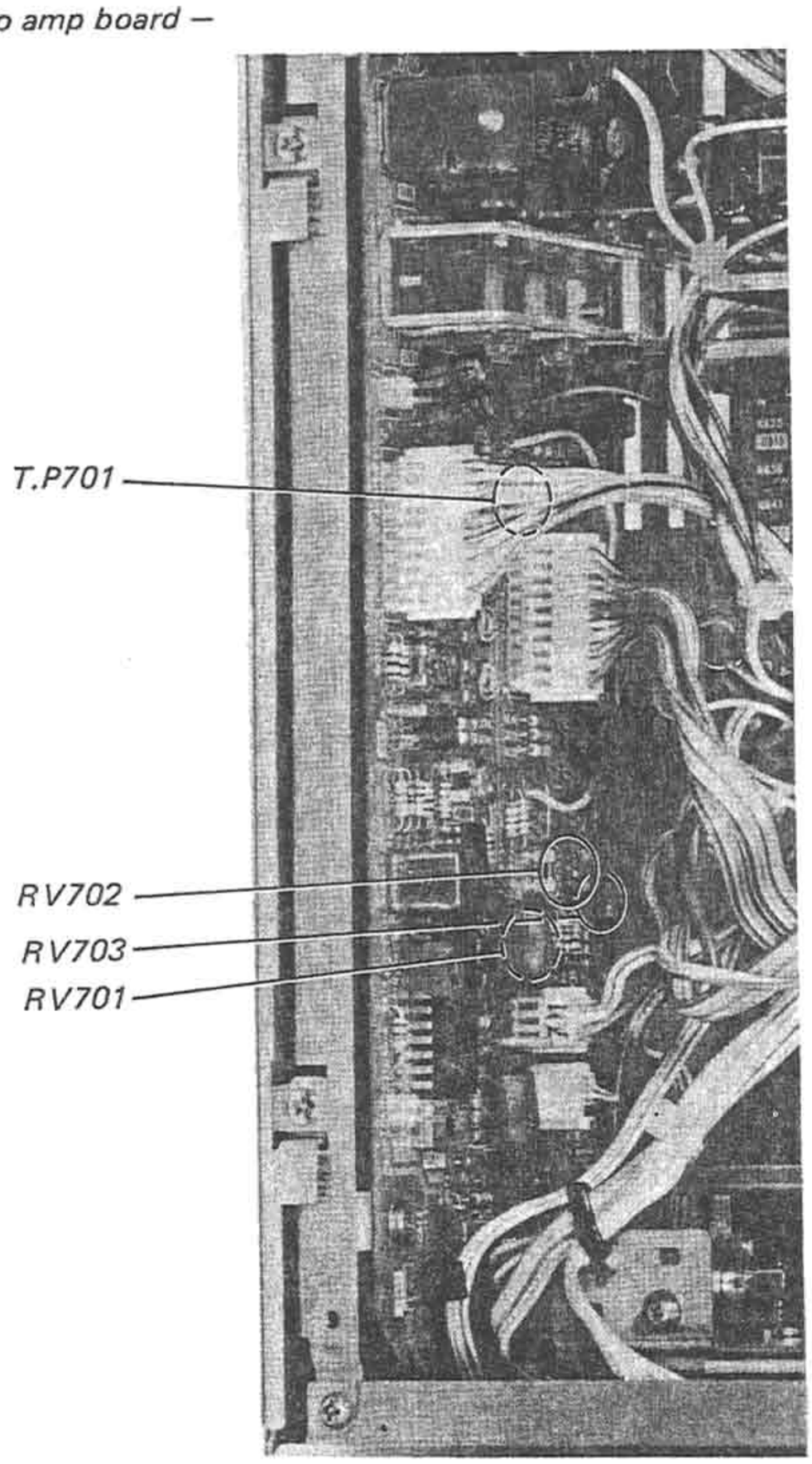

5. Playback Offset Adjustment

Procedure:

Adjust RV101 (L-CH), RV201 (R-CH) so that output level at test points, R109 (L-CH), R209 (R-CH) is 0 V ±100 mV.

Connection:

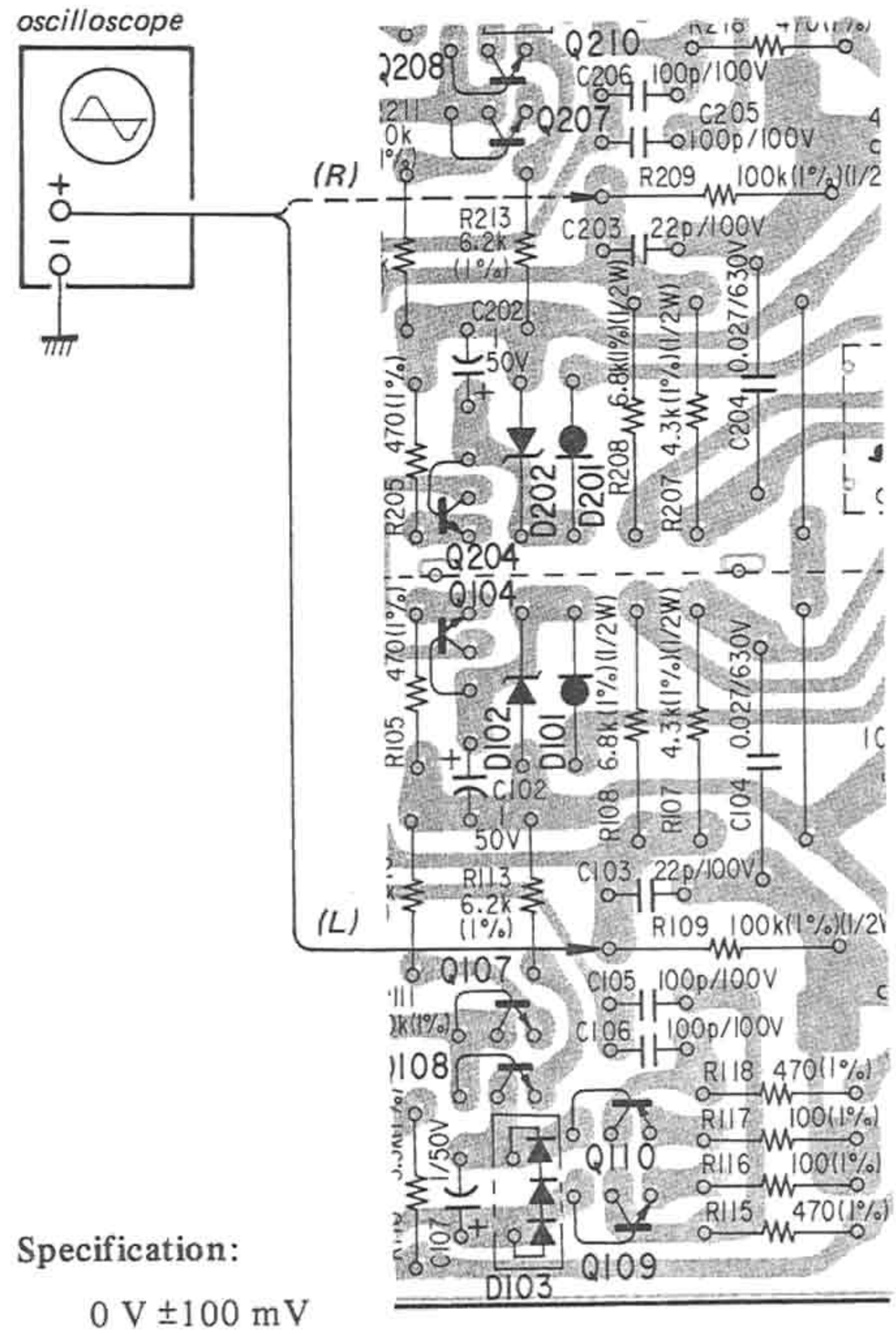

Specification:

0 V ±100 mV

Adjustment Location:

– record/playback board –

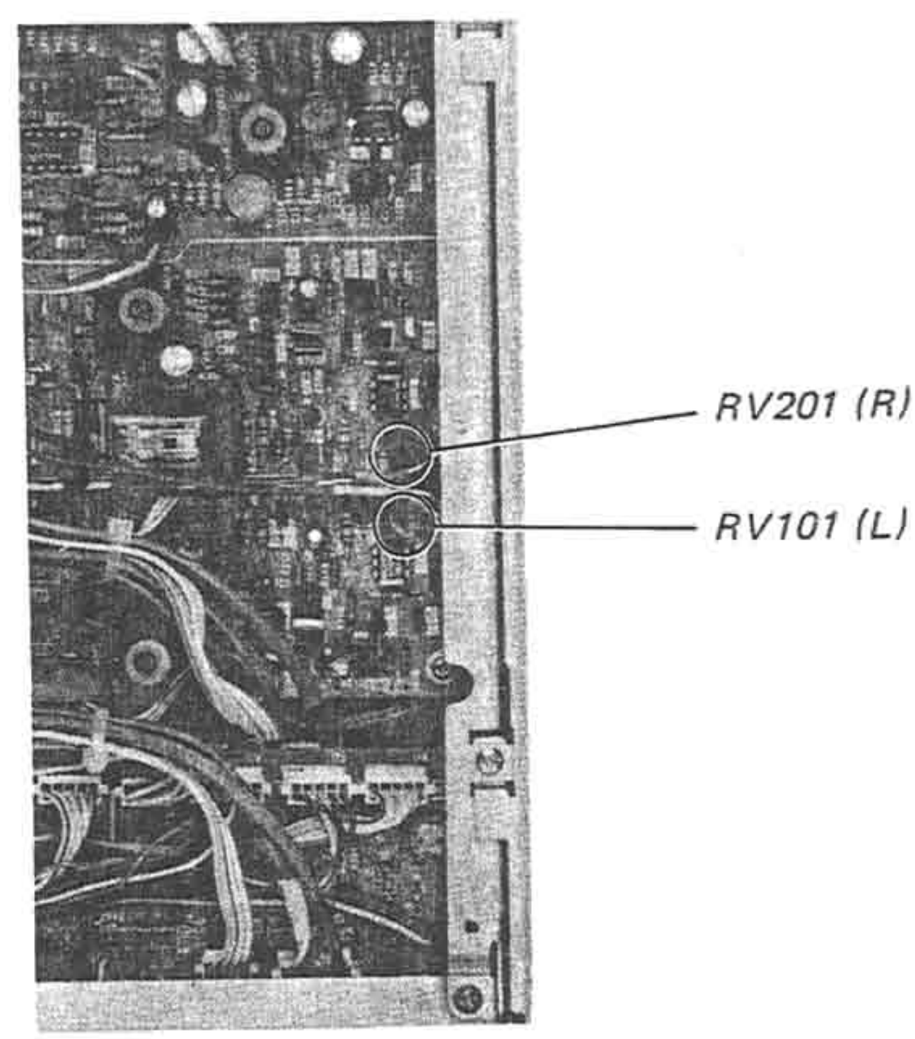

6. Playback Level Adjustment

Setting:

TAPE SELECT switch: TYPE I
mode: playback

Procedure:

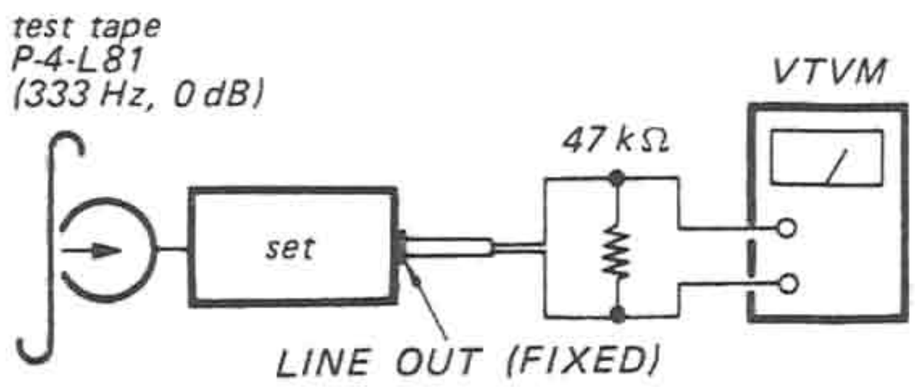

Adjust RV102 (L-CH) and RV202 (R-CH) to obtain the specified LINE OUT level.

Specification:

LINE OUT level: 0.52 – 0.58V
(–3.5 to –2.5dB)
Level difference between channels:
less than 0.5dB

Check that the LINE OUT level does not change in playback mode while changing the mode from playback to stop several times.

Adjustment Location:
– record/playback board –

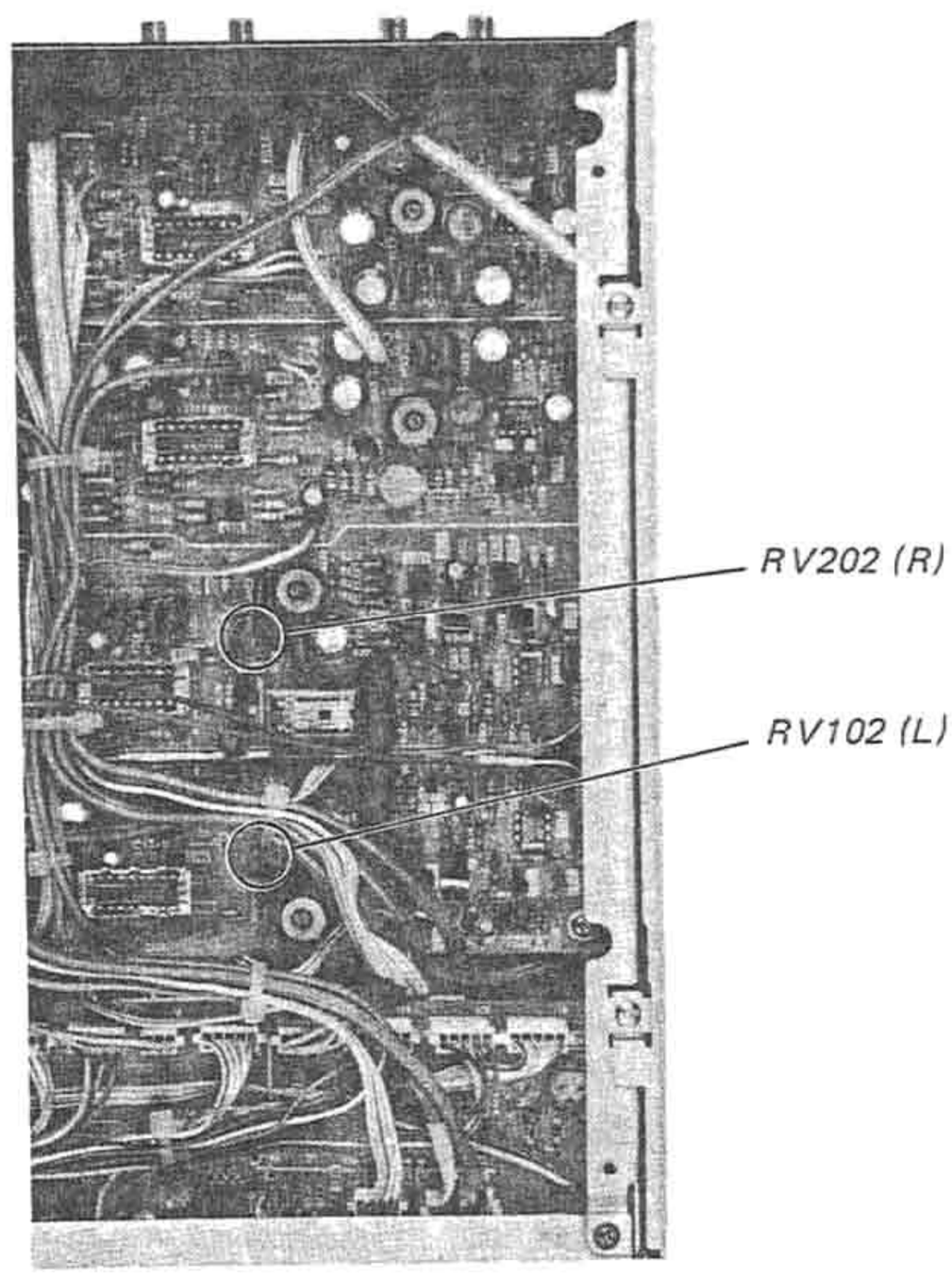

7. Record Level Adjustment

Setting:

REC LEVEL control: standard record
(See page 31.)

Procedure:

1. Mode: record

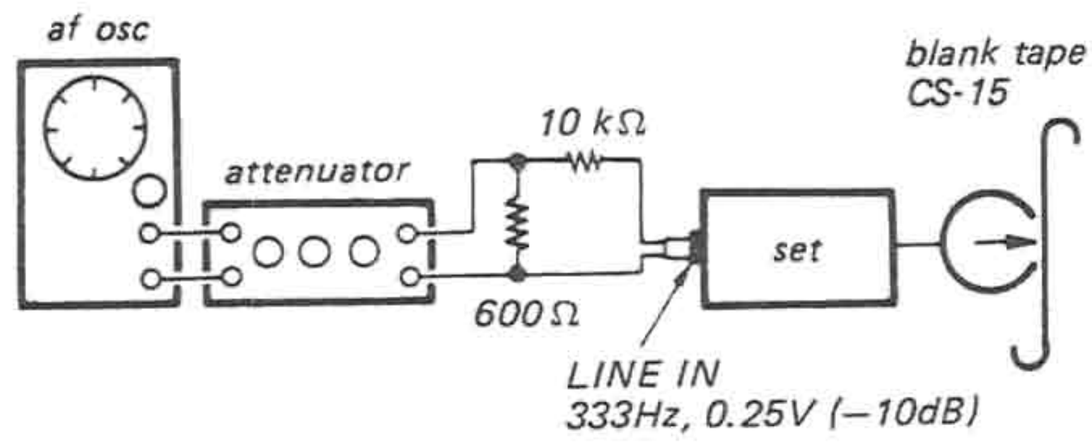

2. Mode: playback

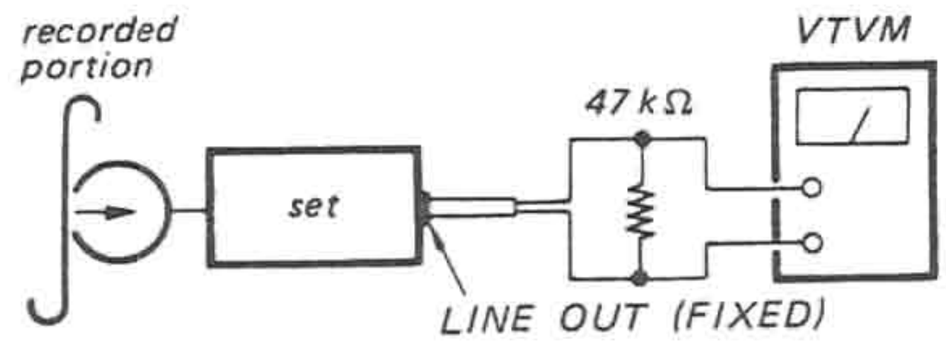

Adjust RV104 (L-CH) and RV204 (R-CH) to obtain 0.44V (–5dB) LINE OUT level.

Specification:

LINE OUT level: 0.39 – 0.49V
(–6 to –4dB)

Adjustment Location: *– record/playback board –*

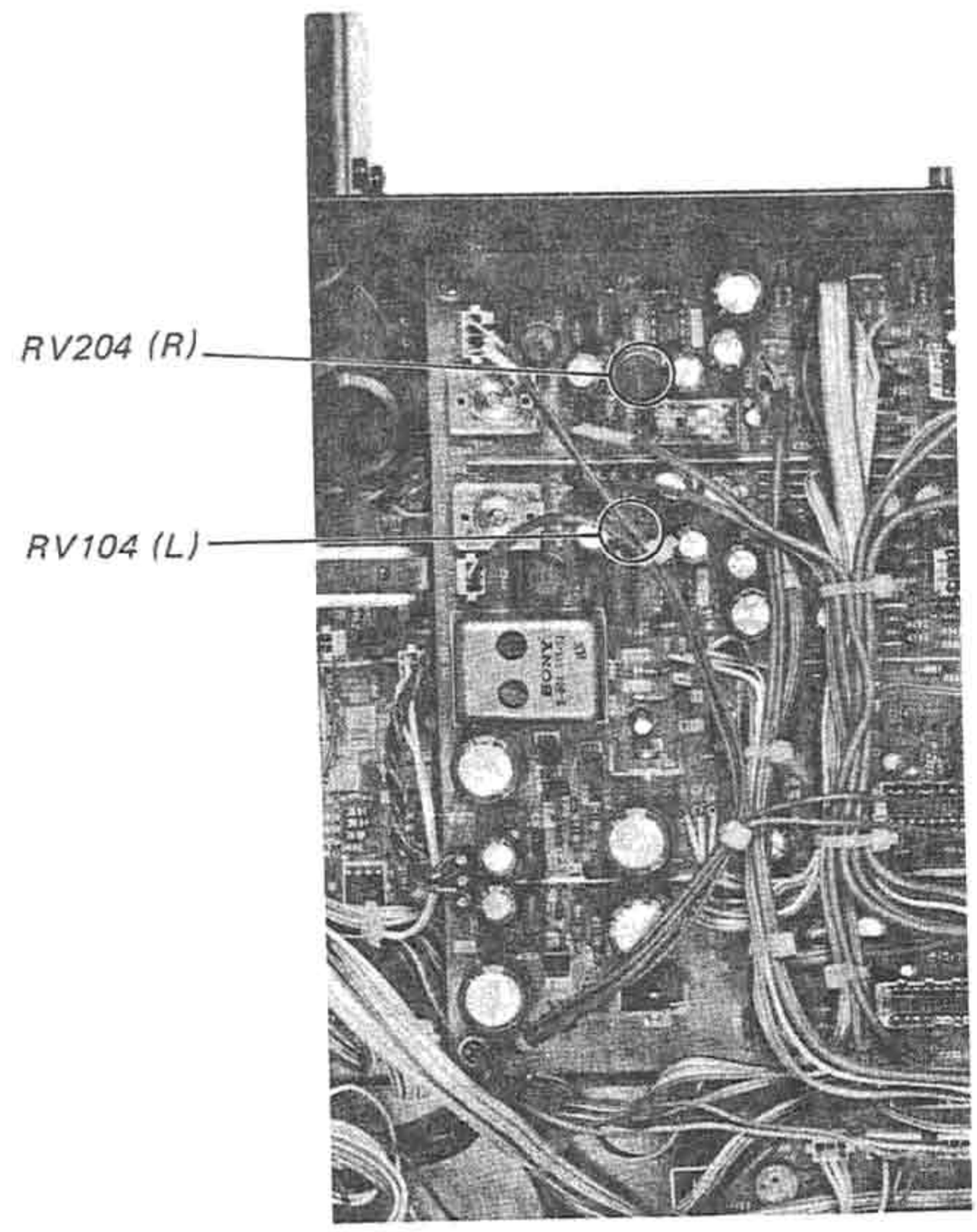

8. Record Bias Adjustment

Setting:

REC LEVEL control: standard record
(See page 31.)

Procedure:

1. Mode: record

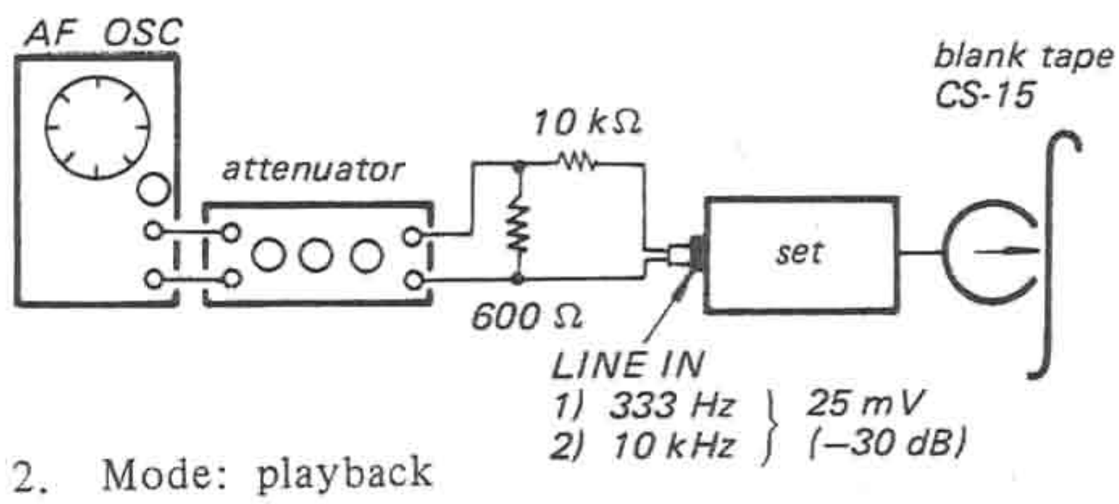

2. Mode: playback

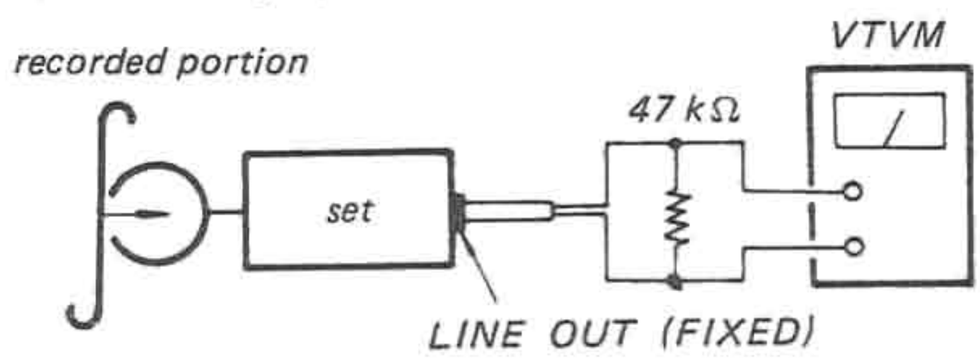

Adjust C146 (L), C246 (R) to obtain the same playback level at 333 Hz and 10 kHz.

3. Repeat steps 1 and 2. Be sure to finish adjusting C146, 246 by turning them clockwise.

Adjustment Location:

– record/playback board –

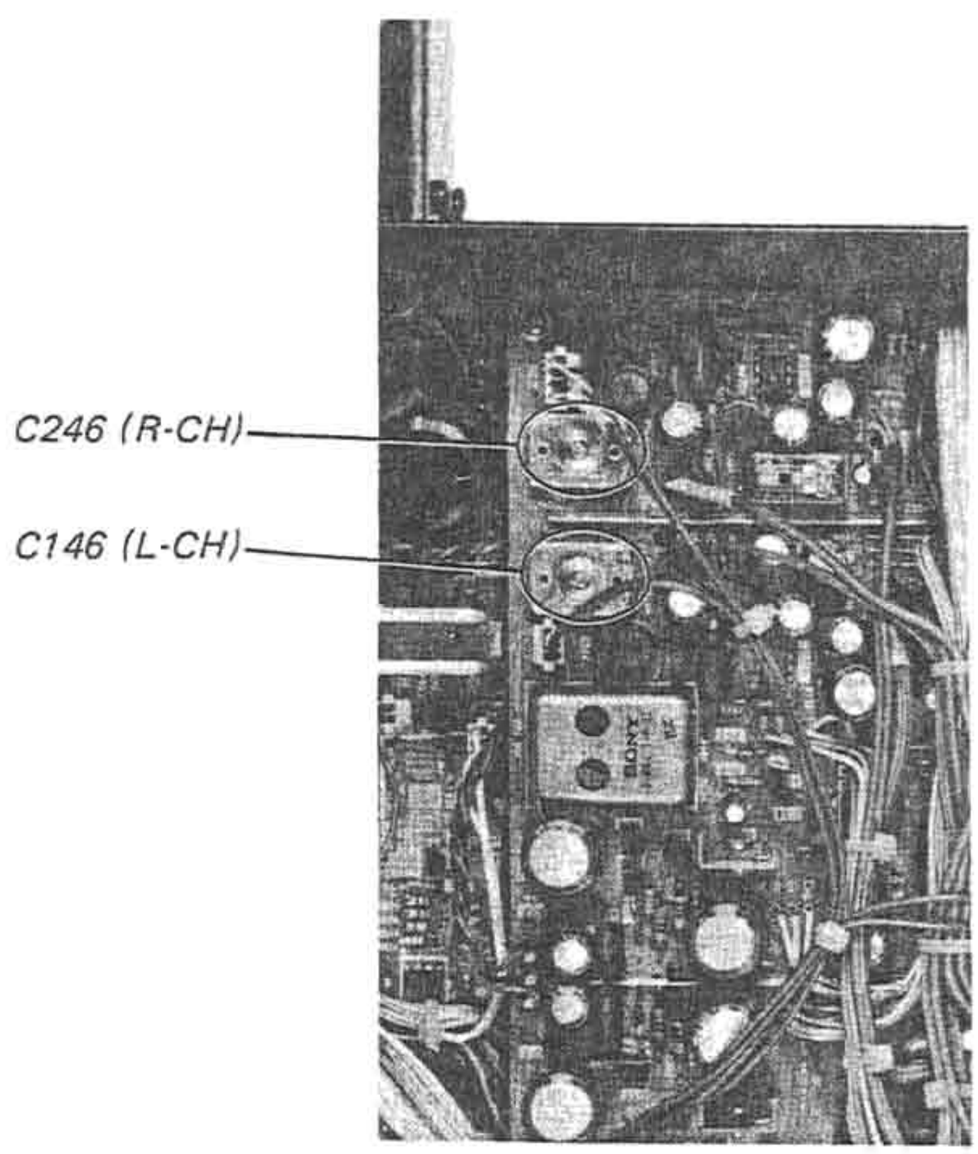

9. Record-Bias Trap and Bias Osc Frequency Adjustments

Setting:

TAPE switch: TYPE IV
MONITOR switch: TAPE

Procedure:

1. Mode: record (with no signal)

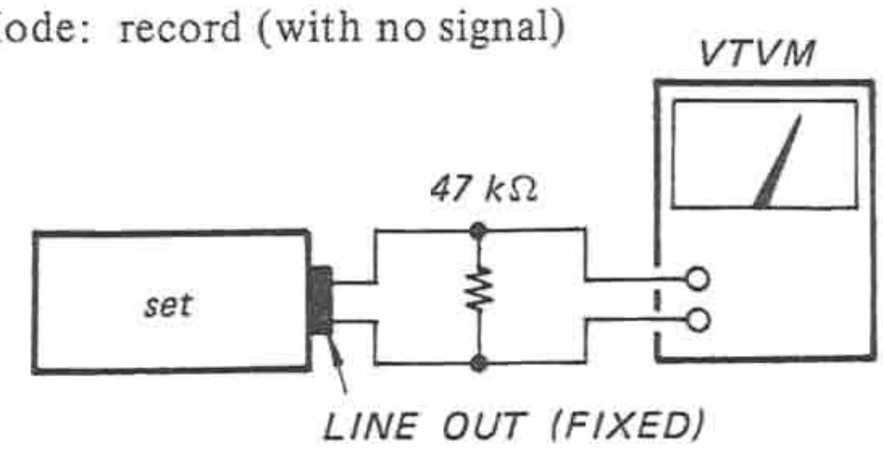

2. Adjust L101 (L-CH) and L201 (R-CH) so that LINE OUT level is less than 2.5 mV (−50 dB).

3. Next, connect the frequency counter with a trimmer capacitor (C146 or C246) and adjust bias osc frequency by turning red core of OSC501 (bias osc unit) so that the reading is 103–107 kHz.

Note: Never turn brown core.

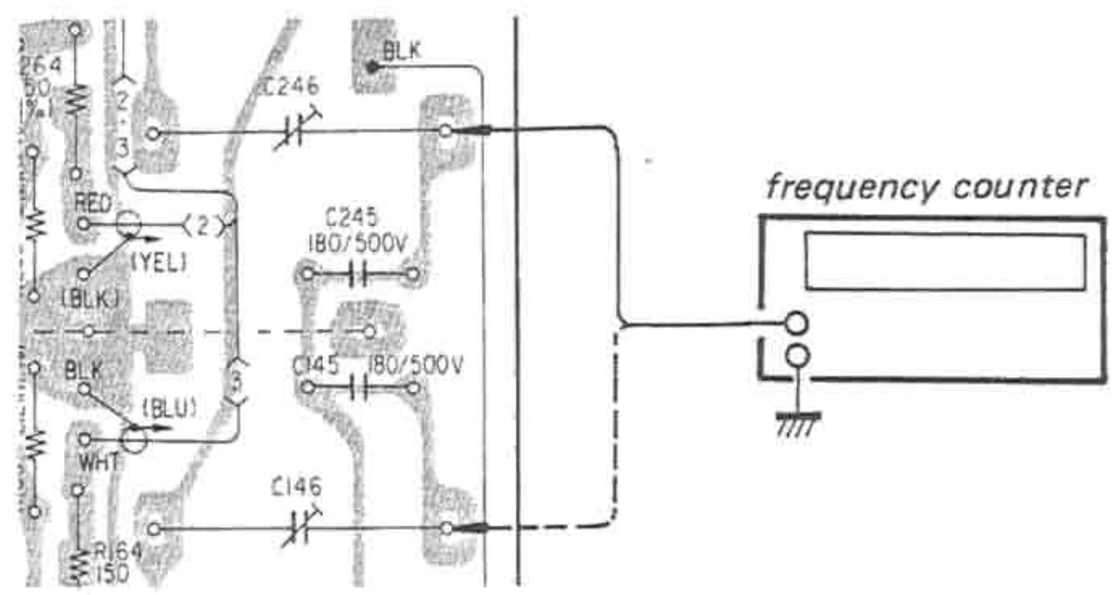

Adjustment Location:

– record/playback board –

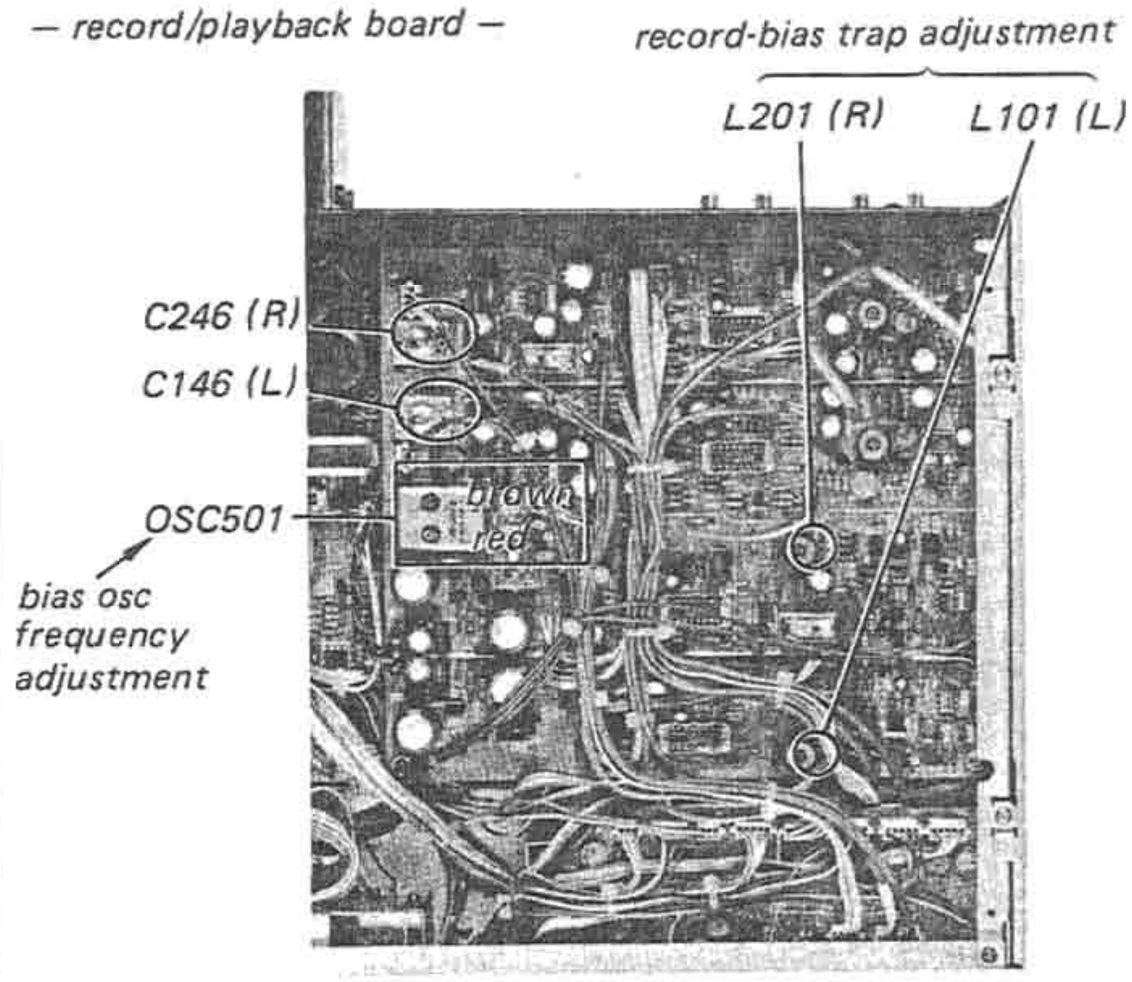

10. Meter Adjustment

Setting:

PEAK HOLD reset switch: MANUAL
REC LEVEL control : standard record
(See page 31.)

Procedure:

1. Mode: record

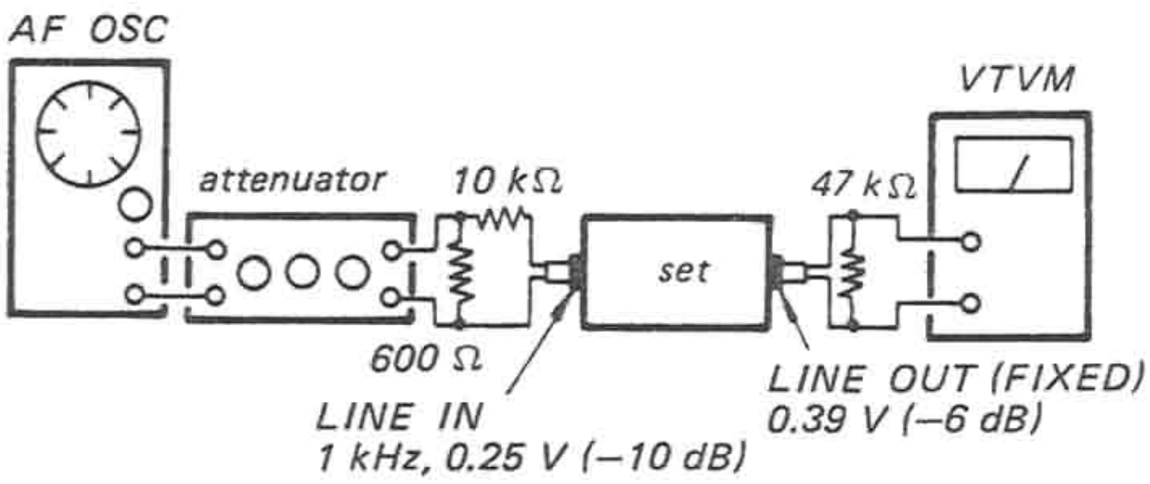

2. Set RV504, 505, 108 (L-CH), 208 (R-CH) at mechanical center.
3. Turn the REC LEVEL control so that the LINE OUT level is −6 dB when LINE IN level is at 1 kHz.
4. Adjust RV107 (L-CH), 207 (R-CH) so that the segment one above the −6 dB indication of meter lights up.
5. Set LINE OUT level to 0.44 V (−5 dB) and adjust RV504, 505 so that the segment one below 0 VU (−4 dB) indication goes off.
6. Next, set LINE OUT level to 2.2 V (9 dB) and adjust RV108 (L-CH) 208 (R-CH) so that uppermost segment lights up.
7. Be sure that the segment one below the 0 VU (−4 dB) indication goes off when returning LINE OUT to 0.44 V (−5 dB). If necessary, readjust RV504.

Adjustment Location:

– REC CAL board –

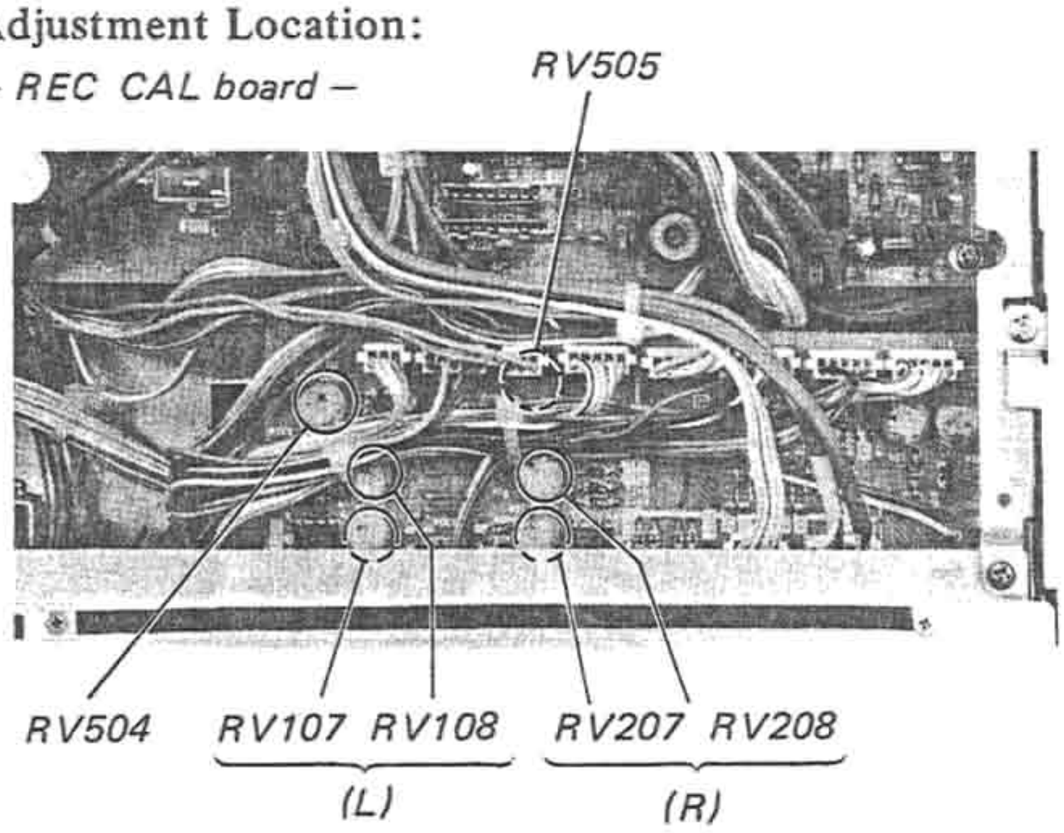

11. REC LEVEL CAL adjustment

Setting:

CALIBRATION MODE switch: REC LEVEL

Procedure:

1. Adjust RV501 so that the level at the check point (R251), is 44 mV (−25 dB).

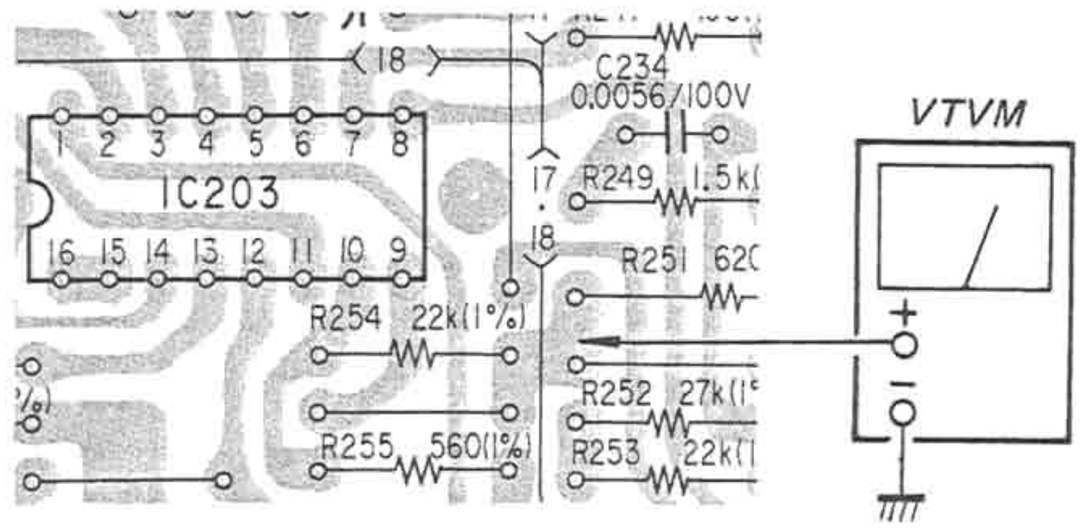

2. Install blank tape (CS-15) and set the unit to RECORD MONITORING mode by changing the MONITOR switch to TAPE position.
   Adjust RV106 (L-CH), 206 (R-CH) so that the segment over 0 dB indication goes out.

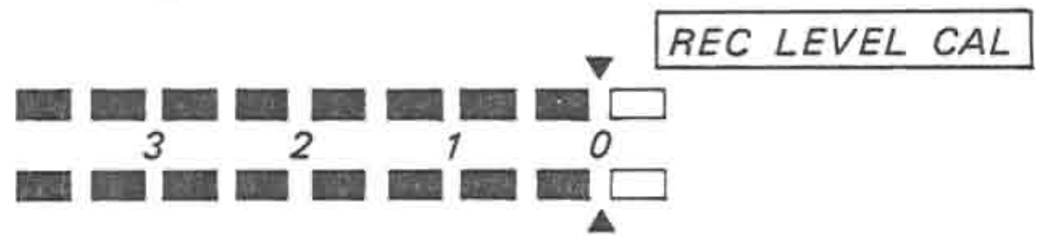

3. Be sure that indication of meter varies as follows when turning REC LEVEL CAL control from mechanical center to MIN or MAX.
   The right segment should be lit up in the following range.
   MINIMUM : A range
   MAXIMUM: B range

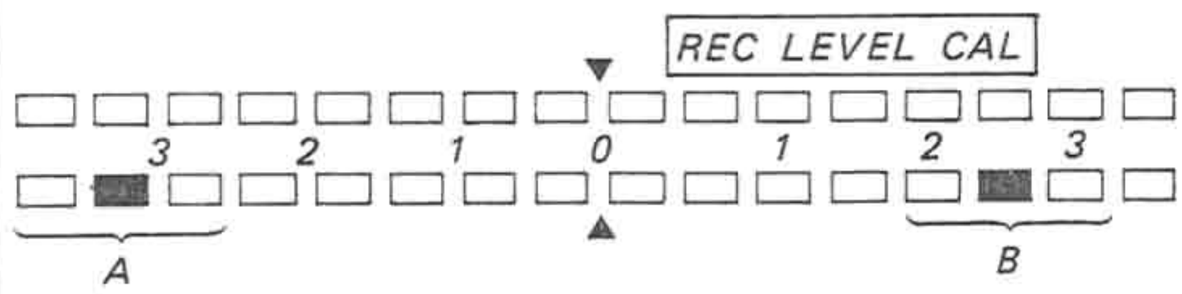

Adjustment Location:

– record/playback board, REC CAL board –

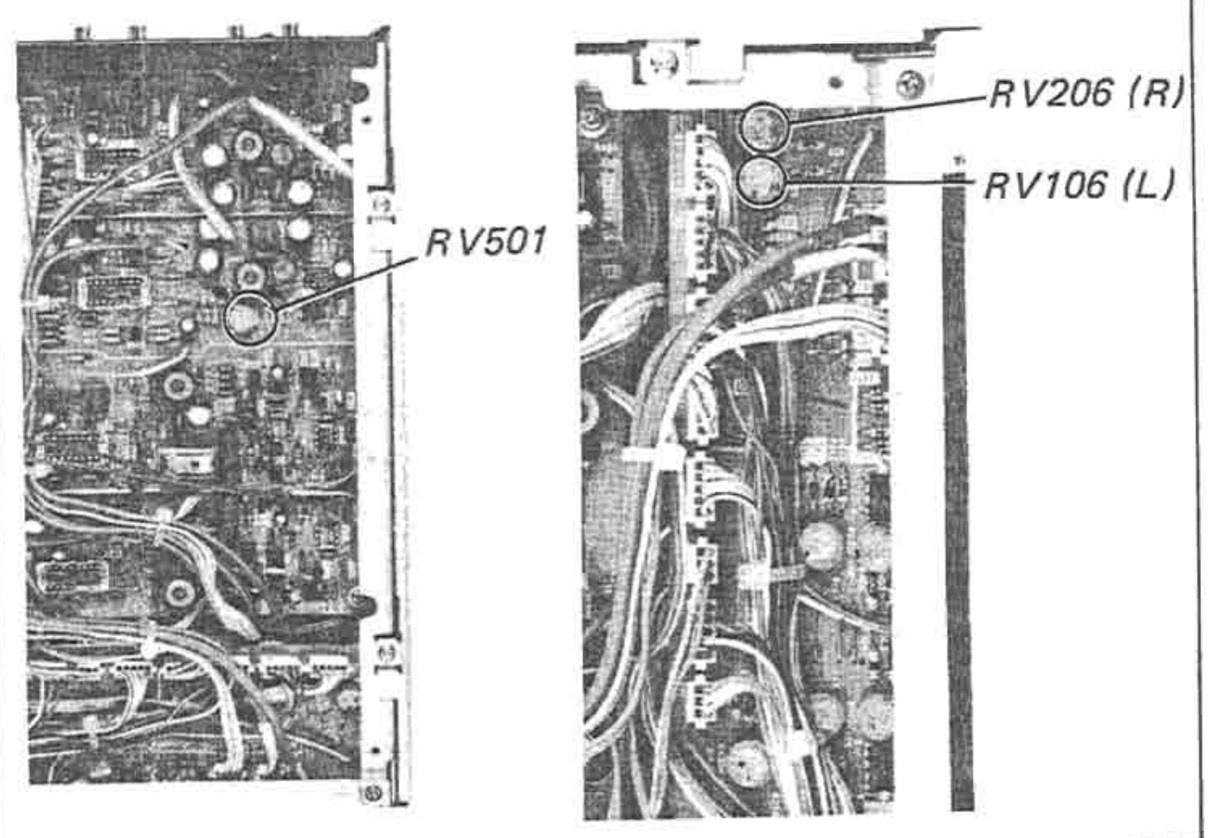

12. Bias Cal Adjustment

Setting:

CALIBRATION MODE switch: BIAS

Procedure:

1. MONITOR switch: TAPE
2. Install the blank tape (CS-15) and adjust RV502 so that the HIGH FREQ element one above the maximum LOW FREQ element lights up completely. (The next one up may blink).

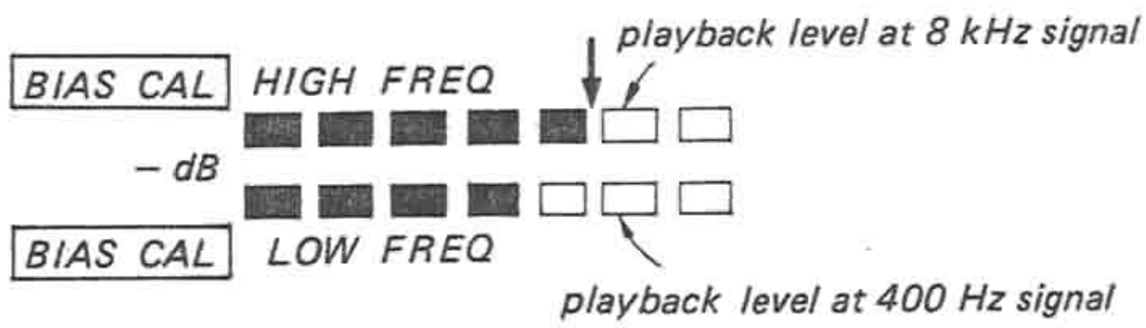

3. Make sure that elements of HIGH FREQUENCY (upper side) vary when turning BIAS CAL control from the mechanical center to MIN and to MAX.
   Relative to level at BIAS CAL control center:
   MIN : +6 element
   MAX: –6 element

Adjustment Location:

– record/playback board –

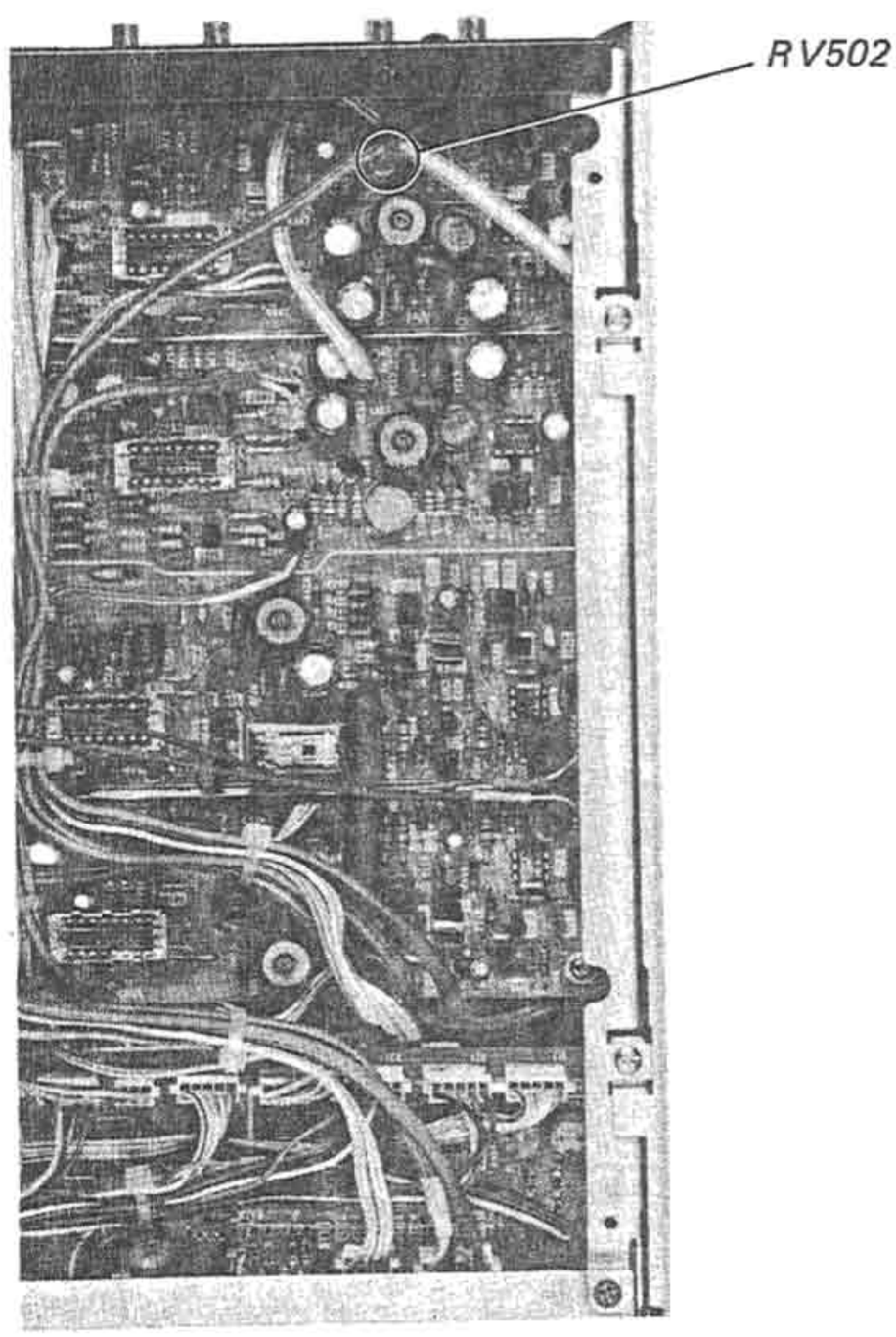

13. MPX Filter Adjustment

1. Mode: record
   MPX filter switch: ON
2. Feed a signal of 333 Hz, 0.25 V (–10 dB) into the LINE IN jack.
3. Adjust the REC LEVEL control for –5 dB (0.44 V) on the VTVM.
4. Feed a signal of 19 kHz, 0.25 V (–10 dB) into the LINE IN jack.
5. Adjust L103 (L-CH) and L203 (R-CH) for minimum reading on VTVM.

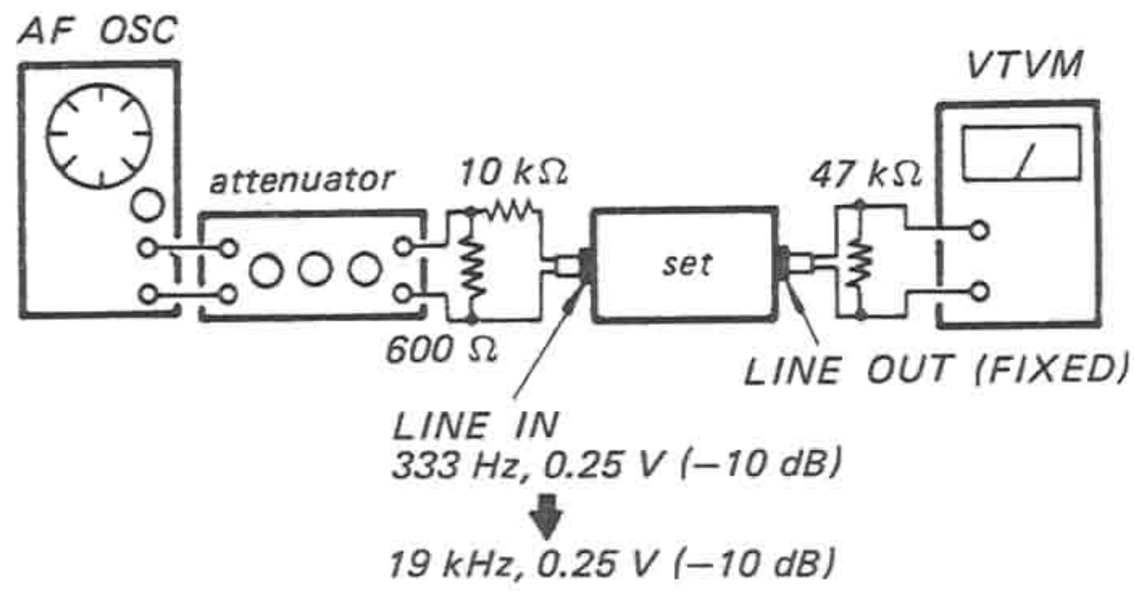

Specification:

Less than 14 mV (–35 dB)

Adjustment Locations:

– record/playback board –

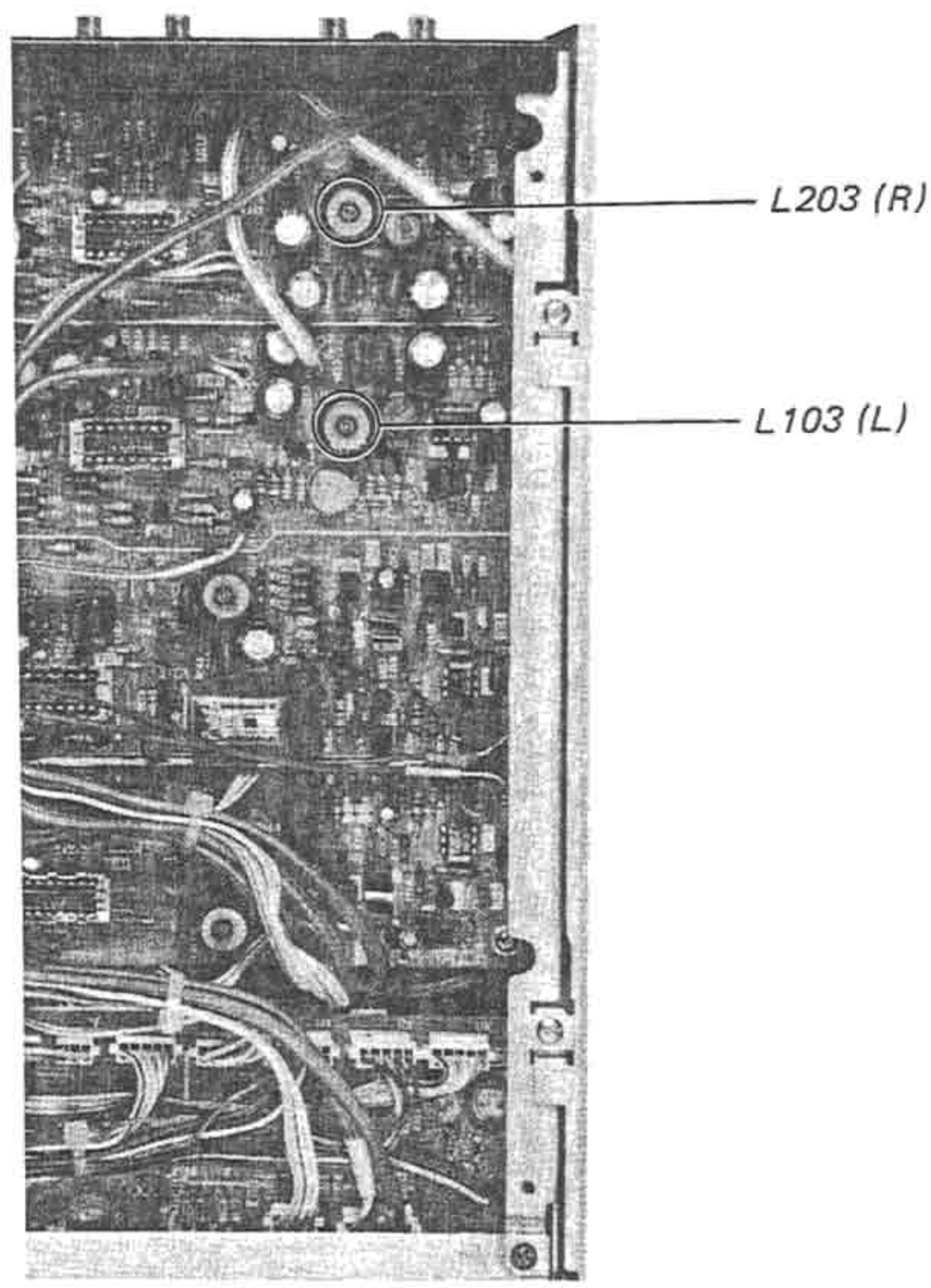

Voltages and Waveforms at the Terminals of IC801

Terminal No.	Waveform or Voltage
①	10 V; 2.6 μsec
②	10 V; 0 V; 4 msec
③–⑥	10 V; 0 V
⑦	10 Vp-p; 0.7 sec; when S951 (POWER) is turned on: 10 Vp-p; 1.3 sec; when S951 (POWER) is turned off:
⑧	10 V; 0 V
⑨	fast forward mode: 11 V; 0 V; 12 msec; forward mode: 11 V; 0 V; rewind mode: 11 V; 0 V; 5 msec
⑩	10 V; 0V
⑪	10 V; 0 V; when TIMER is turned off: 4 V; 0 V; TIMER switch: REC
⑫	4 V; 0 V; TIMER switch: REC
⑬	10 V; 0 V; rewind mode; 10 V; 0 V; just when mode is changed to stop from fast forward
⑭	10 V; 0 V; forward or record mode
⑮	10 V; 0 V; fast forward mode or just when mode is changed to stop from rewind
⑯	rewind and fast forward mode } DC 10 V
⑰, ⑱	forward and record mode } DC 10 V
⑲	rewind mode: DC 10 V; 10 V; 0 V; when forward/record button is turned on:
⑳, ㉑	DC 10 V
㉒	pause mode; 10 V; 0 V
㉓	record mode: DC 10 V
㉔	fast forward mode: DC 10 V
㉕	forward and record mode DC 10 V
㉖	rewind mode: DC 10 V
㉗, ㉘	DC 10 V
㉙	forward and record mode DC 10 V
㉚, ㉛	record mode: DC 10 V
㉜	DC 10 V
㉝	grounded
㉞	DC 10 V
㉟	10 V; 5 V; when PAUSE button is being pushed; 0 V
㊱	10 V; 3 V; 0 V; when REC button is pushed
㊲	10 V; 0 V; when fast forward button is being pushed
㊳	10 V; 0 V; when forward button is pushed
㊴	10 V; 0 V; when REC button is pushed
㊶	grounded
㊷	0.28 V; 2.6 μsec

Note: Voltage levels are measured by the oscilloscope which has 10 MΩ probe. They may be different from those indicated in the schematic or mounting diagrams which are measured by a VOM.

4-1. MOUNTING DIAGRAM – Audio Amp Section –
– Conductor Side –

- **See page 59 for the Semiconductor Lead Layouts.**

Note:

- Color code of sleeving over the end of the jacket.

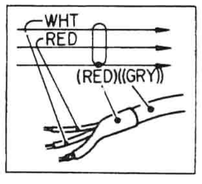

- : parts extracted from the component side.
- : indicates side identified with part number.
- Ⓕ : fusible resistor.
- : B + pattern
- : B – pattern
- : signal path
- : L-CH signal path
- : R-CH signal path

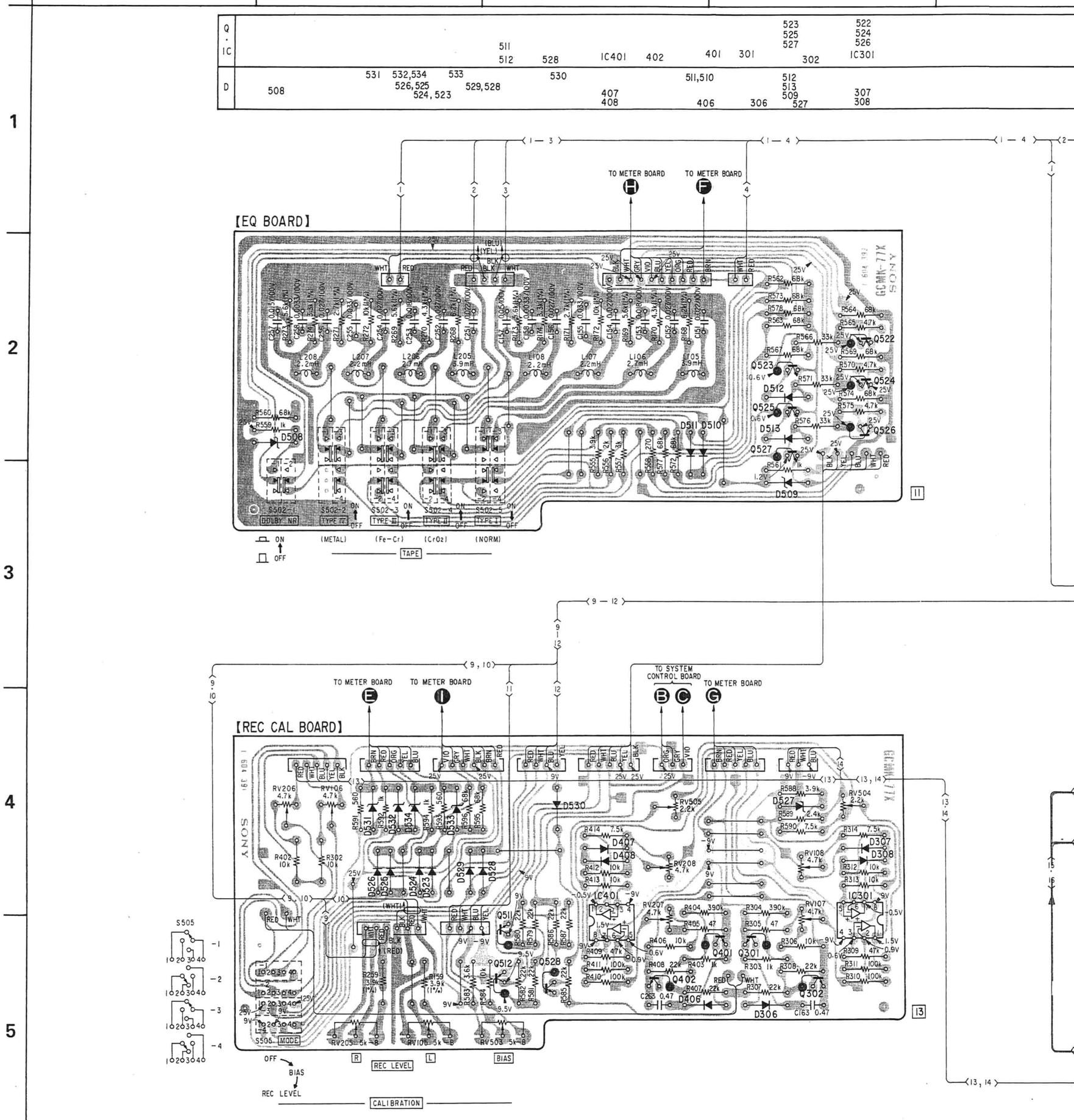

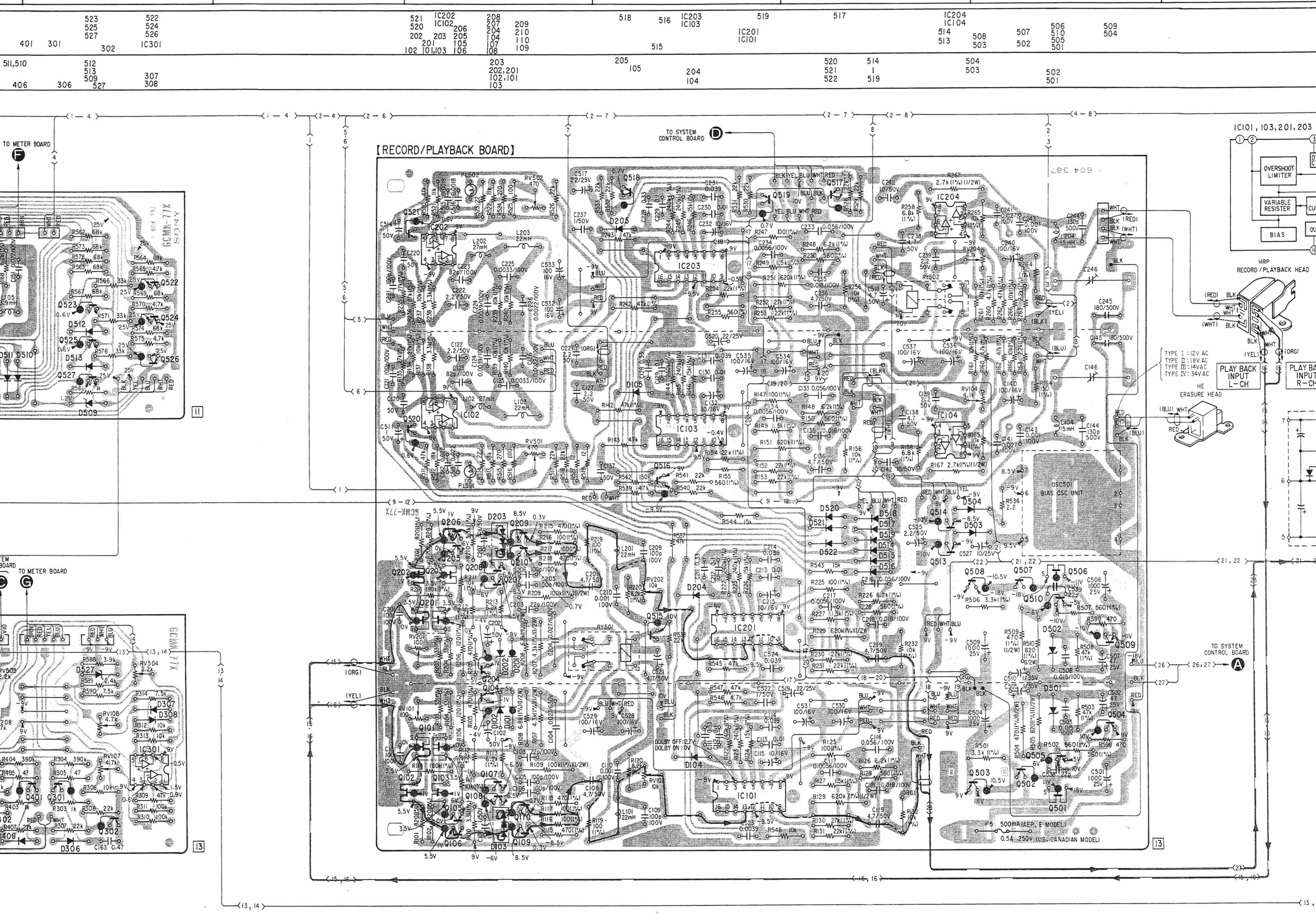
【RECORD/PLAYBACK BOARD】
TO METER BOARD
TO SYSTEM CONTROL BOARD
IC101, 103, 201, 203
OVERSHOOT LIMITER
VARIABLE RESISTER
BIAS
HRP RECORD/PLAYBACK HEAD
HE ERASURE HEAD
TYPE I : 12V AC
TYPE II : 18V AC
TYPE III : 14V AC
TYPE IV : 34V AC
PLAY BACK INPUT L-CH
PLAY BACK INPUT R-CH
OSC501 BIAS OSC UNIT
F5 500mA (AEP, E MODEL)
0.5A 250V (US, CANADIAN MODEL)
DOLBY OFF: 2.7V
DOLBY ON: 0V
GCMK-77K
SONY

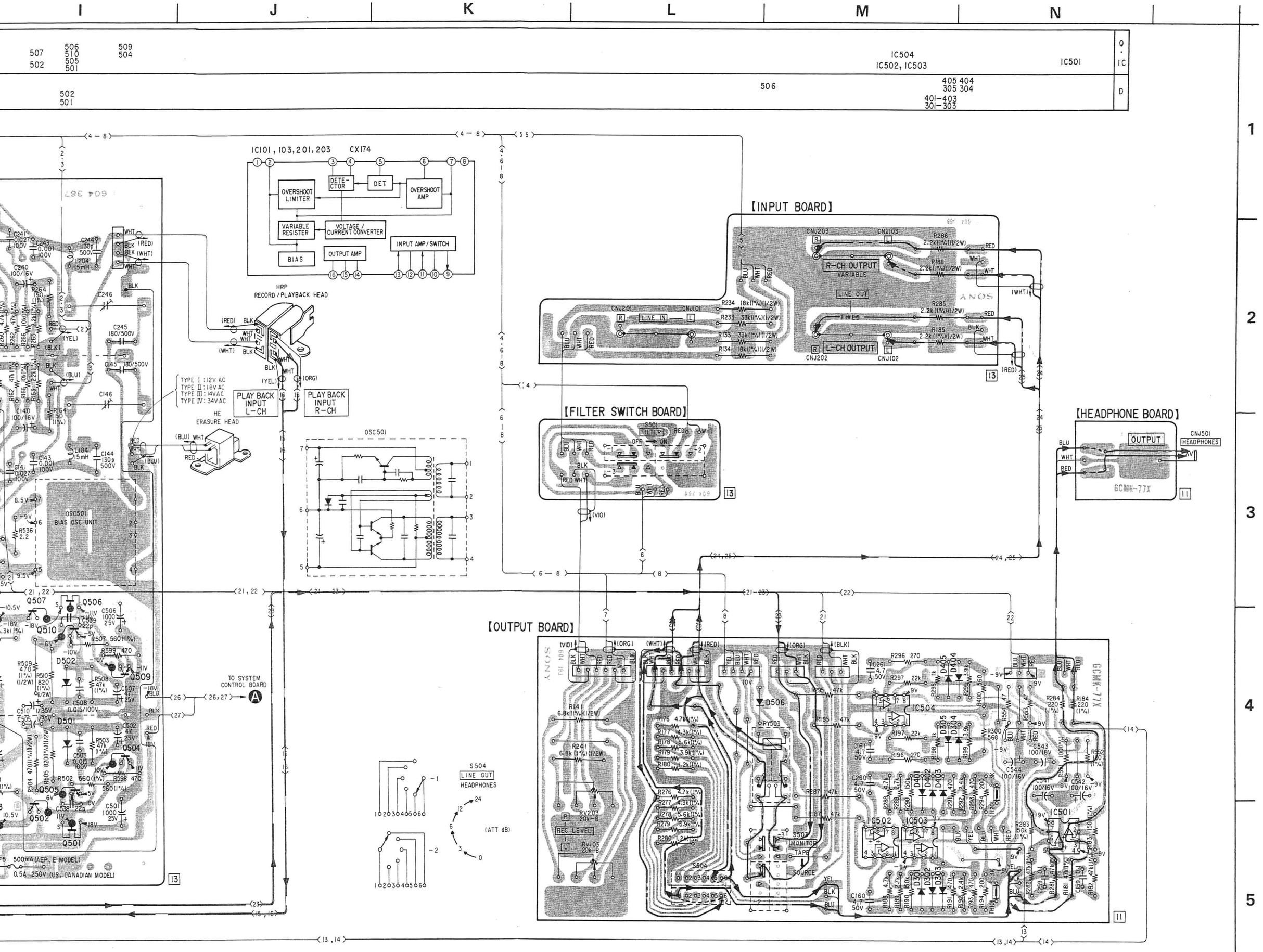
I
J
K
L
M
N
Q·IC
D
IC504
IC502, IC503
IC501
IC101, 103, 201, 203
CX174
OVERSHOOT LIMITER
DETE-CTOR
DET
OVERSHOOT AMP
VARIABLE RESISTER
VOLTAGE / CURRENT CONVERTER
INPUT AMP / SWITCH
BIAS
OUTPUT AMP
HRP
RECORD / PLAYBACK HEAD
HE
ERASURE HEAD
TYPE I : 12V AC
TYPE II : 18V AC
TYPE III : 14VAC
TYPE IV : 34V AC
PLAY BACK INPUT L-CH
PLAY BACK INPUT R-CH
OSC501
OSC501
BIAS OSC UNIT
TO SYSTEM CONTROL BOARD
500mA (AEP, E MODEL)
0.5A 250V (US, CANADIAN MODEL)
【INPUT BOARD】
R-CH OUTPUT
VARIABLE
LINE OUT
FIXED
L-CH OUTPUT
LINE IN
【FILTER SWITCH BOARD】
【HEADPHONE BOARD】
OUTPUT
HEADPHONES
【OUTPUT BOARD】
S504
LINE OUT
HEADPHONES
(ATT dB)
REC LEVEL
MONITOR
TAPE
SOURCE
IC504
IC502
IC503
IC501

4-2. SCHEMATIC DIAGRAM
– Audio Amp Section –

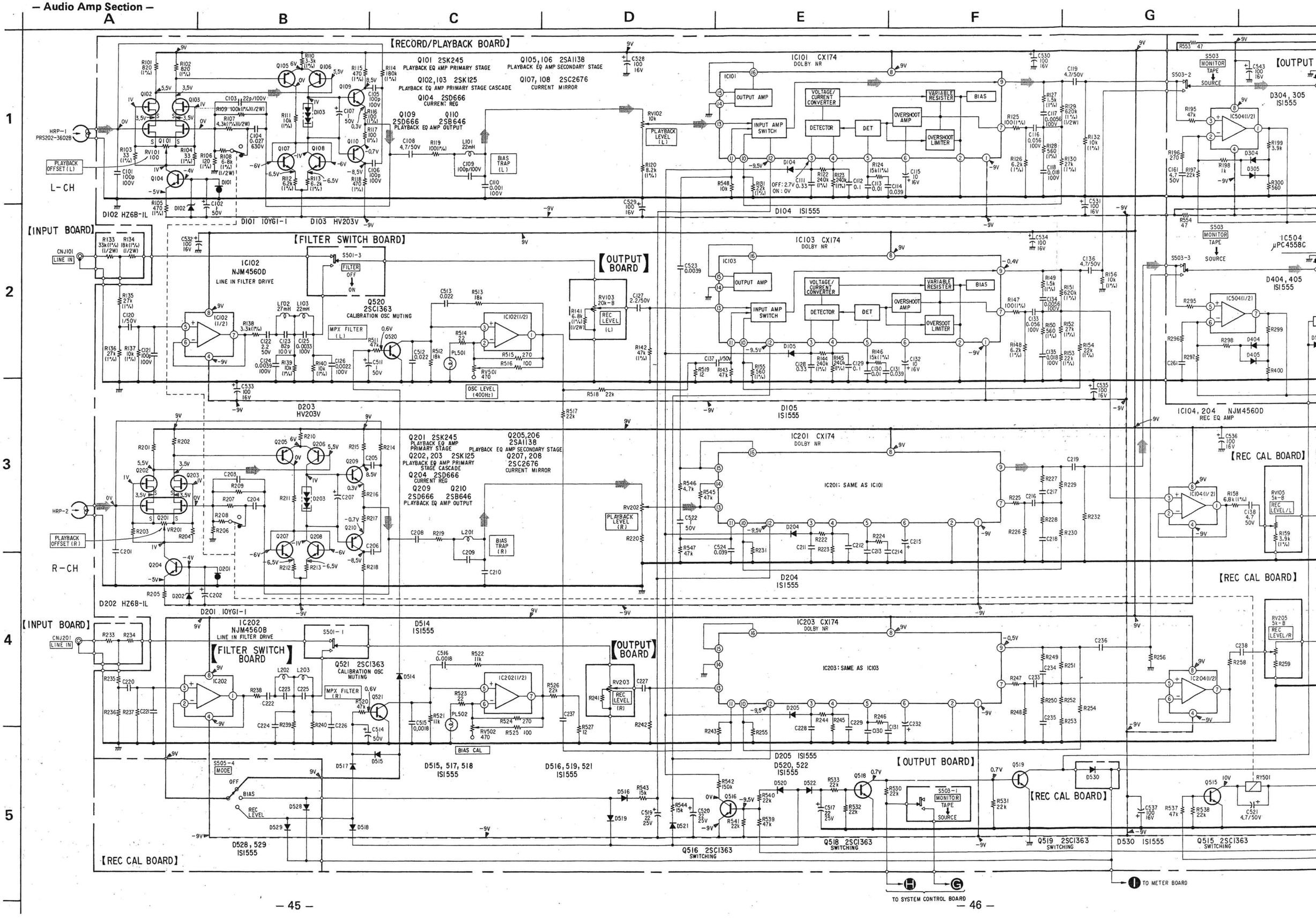

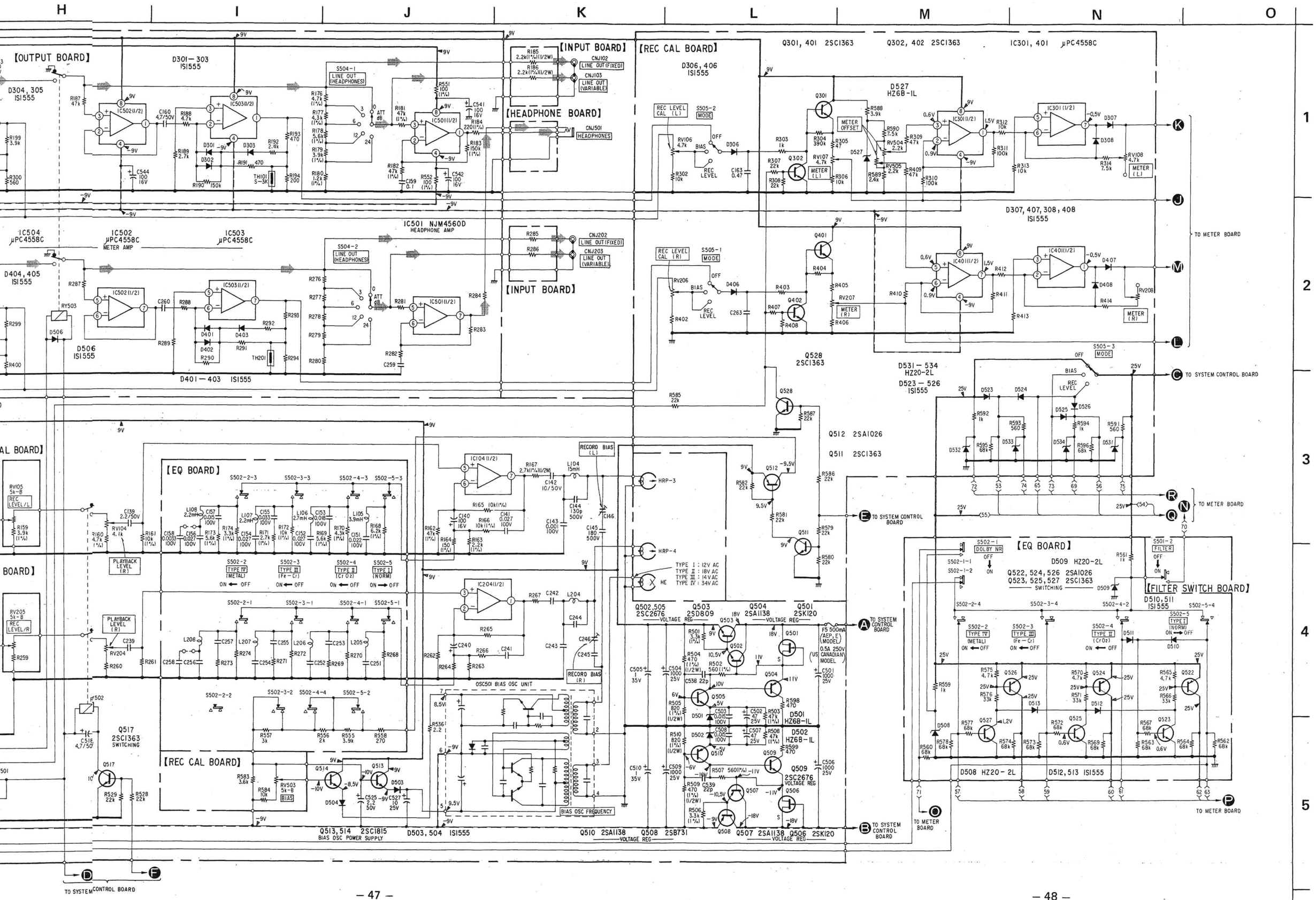
H
I
J
K
L
M
N
O
1
2
3
4
5
【OUTPUT BOARD】
D301—303 IS1555
D304, 305 IS1555
IC502(1/2)
IC503(1/2)
IC501(1/2)
S504-1
LINE OUT (HEADPHONES)
【INPUT BOARD】
CNJ102
LINE OUT (FIXED)
CNJ103
LINE OUT (VARIABLE)
【HEADPHONE BOARD】
CNJ501
HEADPHONES
【REC CAL BOARD】
D306, 406 IS1555
Q301, 401 2SC1363
Q302, 402 2SC1363
IC301, 401 μPC4558C
D527 HZ6B-IL
D307, 407, 308, 408 IS1555
IC401(1/2)
TO METER BOARD
IC504 μPC4558C
IC502 μPC4558C
METER AMP
IC503 μPC4558C
IC501 NJM4560D
HEADPHONE AMP
S504-2
LINE OUT (HEADPHONES)
CNJ202
LINE OUT (FIXED)
CNJ203
LINE OUT (VARIABLE)
【INPUT BOARD】
D404, 405 IS1555
D506 IS1555
D401—403 IS1555
Q528 2SC1363
D531—534 HZ20-2L
D523—526 IS1555
S505-3
MODE
TO SYSTEM CONTROL BOARD
Q512 2SA1026
Q511 2SC1363
【EQ BOARD】
S502-2-3
S502-3-3
S502-4-3
S502-5-3
S502-2
TYPE IV (METAL)
S502-3
TYPE III (Fe-Cr)
S502-4
TYPE II (CrO2)
S502-5
TYPE I (NORM)
ON ← OFF
ON → OFF
PLAYBACK LEVEL (R)
PLAYBACK LEVEL (L)
S502-2-1
S502-3-1
S502-4-1
S502-5-1
S502-2-2
S502-3-2
S502-4-4
S502-5-2
Q517 2SC1363 SWITCHING
【REC CAL BOARD】
Q514
Q513
D503
D504
Q513, 514 2SC1815
BIAS OSC POWER SUPPLY
D503, 504 IS1555
OSC501 BIAS OSC UNIT
BIAS OSC FREQUENCY
RECORD BIAS (L)
RECORD BIAS (R)
HRP-3
HRP-4
HE
TYPE I : 12V AC
TYPE II : 18V AC
TYPE III : 14V AC
TYPE IV : 34V AC
Q502, 505 2SC2676
Q503 2SD809
Q504 2SA1138
Q501 2SK120
VOLTAGE REG
F5 500mA (AEP, E MODEL)
0.5A 250V (US CANADIAN MODEL)
D501 HZ6B-IL
D502 HZ6B-IL
Q509 2SC2676
Q510 2SA1138
Q508 2SB731
Q507 2SA1138
Q506 2SK120
TO SYSTEM CONTROL BOARD
TO METER BOARD
【EQ BOARD】
D509 HZ20-2L
Q522, 524, 526 2SA1026
Q523, 525, 527 2SC1363
SWITCHING
S502-1
DOLBY NR
S501-2
FILTER
【FILTER SWITCH BOARD】
D510, 511 IS1555
D508 HZ20-2L
D512, 513 IS1555

4-3. SCHEMATIC DIAGRAM

– System Control and Servo Amp Section –

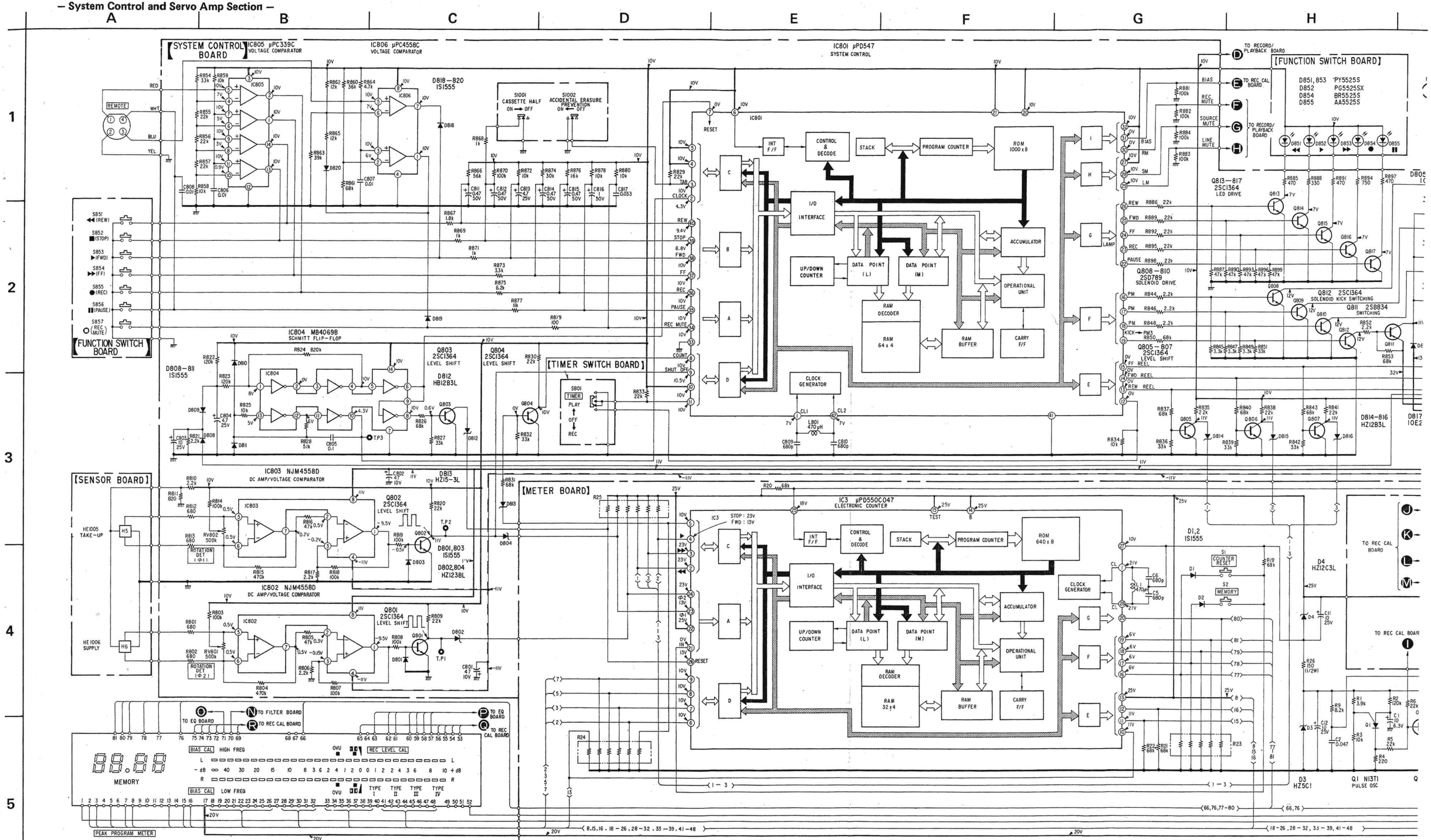

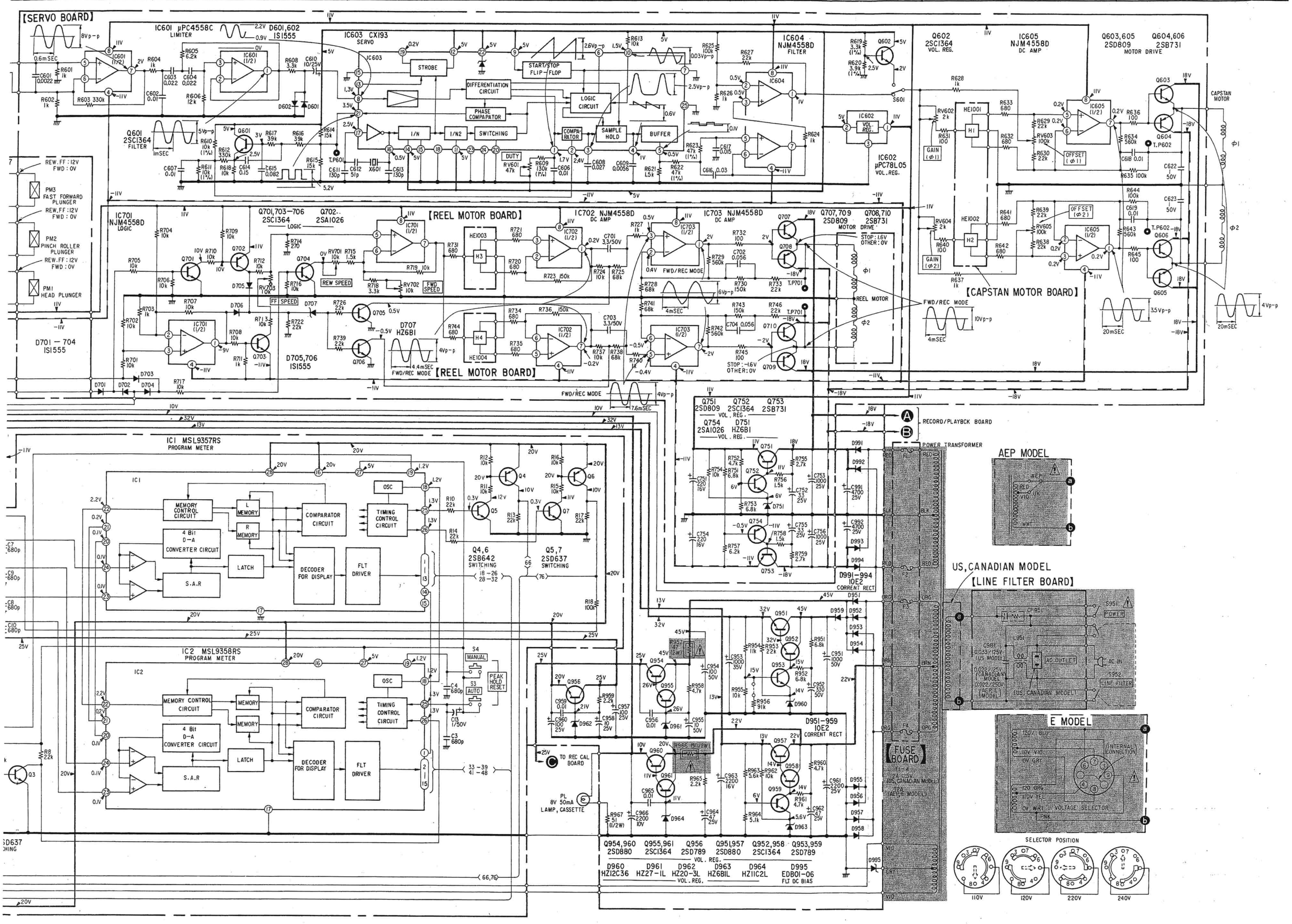
I
J
K
L
M
N
O
[SERVO BOARD]
IC601 μPC4558C LIMITER
D601,602 1S1555
IC603 CX193 SERVO
STROBE
START/STOP FLIP-FLOP
DIFFERENTIATION CIRCUIT
PHASE COMPARATOR
LOGIC CIRCUIT
I/N
I/N2
SWITCHING
COMPARATOR
SAMPLE HOLD
BUFFER
DUTY
Q601 2SC1364 FILTER
IC604 NJM4558D FILTER
IC602 μPC78L05 VOL. REG.
Q602 2SC1364 VOL. REG.
IC605 NJM4558D DC AMP
Q603,605 2SD809 MOTOR DRIVE
Q604,606 2SB731
CAPSTAN MOTOR
REW. FF : 12V FWD : 0V
PM3 FAST FORWARD PLUNGER
PM2 PINCH ROLLER PLUNGER
PM1 HEAD PLUNGER
[REEL MOTOR BOARD]
IC701 NJM4558D LOGIC
Q701,703—706 2SC1364
Q702,704 2SA1026
IC702 NJM4558D DC AMP
IC703 NJM4558D DC AMP
Q707,709 2SD809
Q708,710 2SB731
MOTOR DRIVE
STOP : 1.6V OTHER : 0V
REEL MOTOR
FWD/REC MODE
REW SPEED
FWD SPEED
FF SPEED
D701 — 704 1S1555
D705,706 1S1555
D707 HZ6B1
[CAPSTAN MOTOR BOARD]
OFFSET (φ1)
OFFSET (φ2)
GAIN (φ1)
GAIN (φ2)
IC1 MSL9357RS PROGRAM METER
IC2 MSL9358RS PROGRAM METER
MEMORY CONTROL CIRCUIT
4 Bit D-A CONVERTER CIRCUIT
COMPARATOR CIRCUIT
TIMING CONTROL CIRCUIT
DECODER FOR DISPLAY
FLT DRIVER
S.A.R
LATCH
OSC
Q4,6 2SB642 SWITCHING
Q5,7 2SD637 SWITCHING
S4 MANUAL
S3 AUTO
PEAK HOLD RESET
TO REC CAL BOARD
PL 8V 50mA LAMP, CASSETTE
Q751 2SD809
Q752 2SC1364
Q753 2SB731
Q754 2SA1026
D751 HZ6B1
VOL. REG.
D991-994 10E2 CORRENT RECT
D951-959 10E2 CORRENT RECT
Q954,960 2SD880
Q955,961 2SC1364
Q956 2SD789
Q951,957 2SD880
Q952,958 2SC1364
Q953,959 2SD789
D960 HZ12C36
D961 HZ27-1L
D962 HZ20-3L
D963 HZ6B1L
D964 HZ11C2L
D995 EDB01-06 FLT DC BIAS
RECORD/PLAYBCK BOARD
POWER TRANSFORMER
[FUSE BOARD]
AEP MODEL
US, CANADIAN MODEL
[LINE FILTER BOARD]
E MODEL
SELECTOR POSITION
110V
120V
220V
240V

● See page 59 for the Semiconductor Lead Layouts.

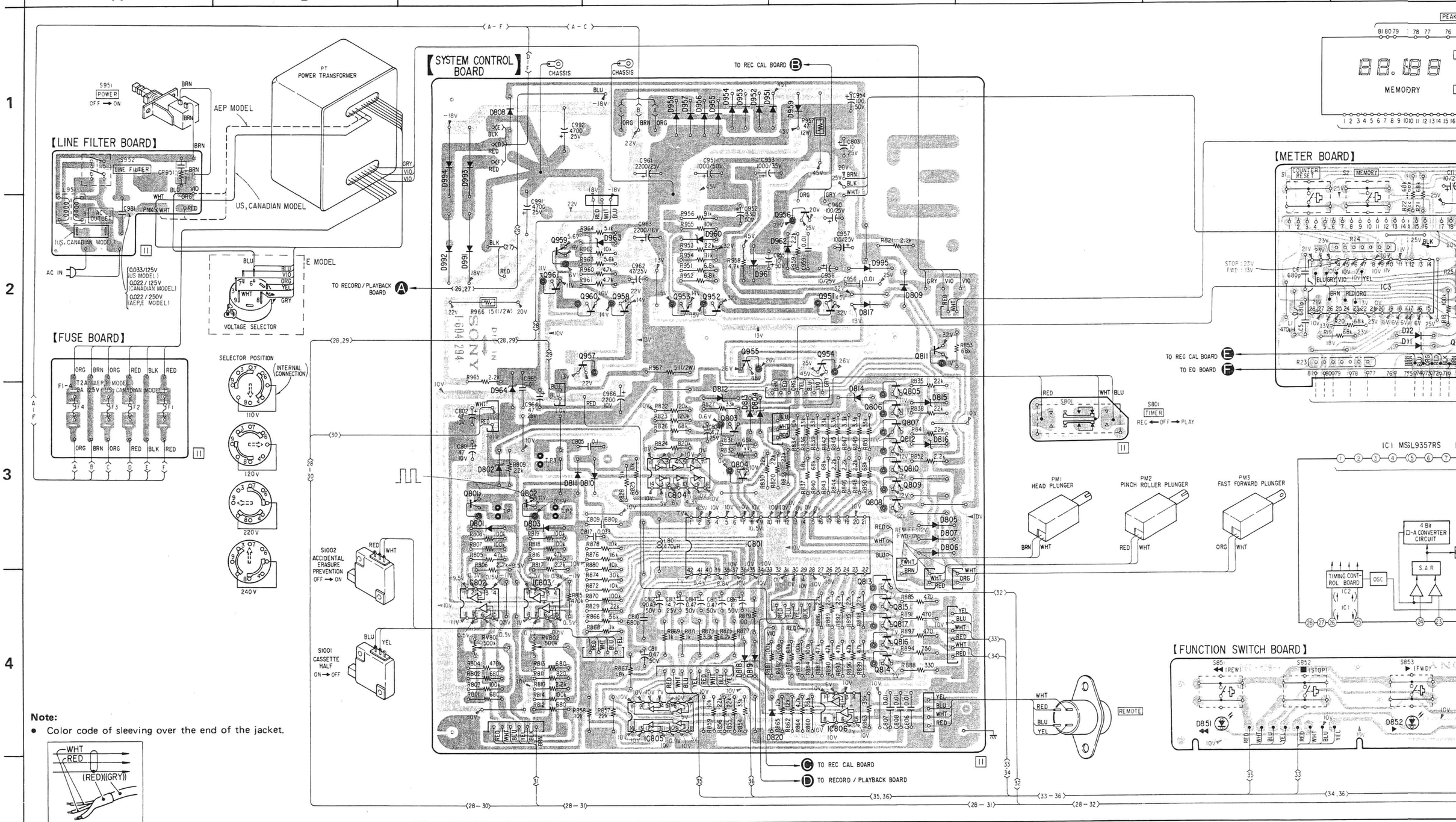

Note:

- Color code of sleeving over the end of the jacket.

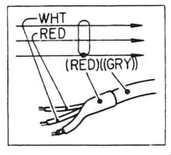

- ○—: parts extracted from the component side.
- ⊡: indicates side identified with part number.
- Ⓕ : fusible resistor.
- : B+ pattern
- : B− pattern
- : signal path
- : L-CH signal path
- : R-CH signal path

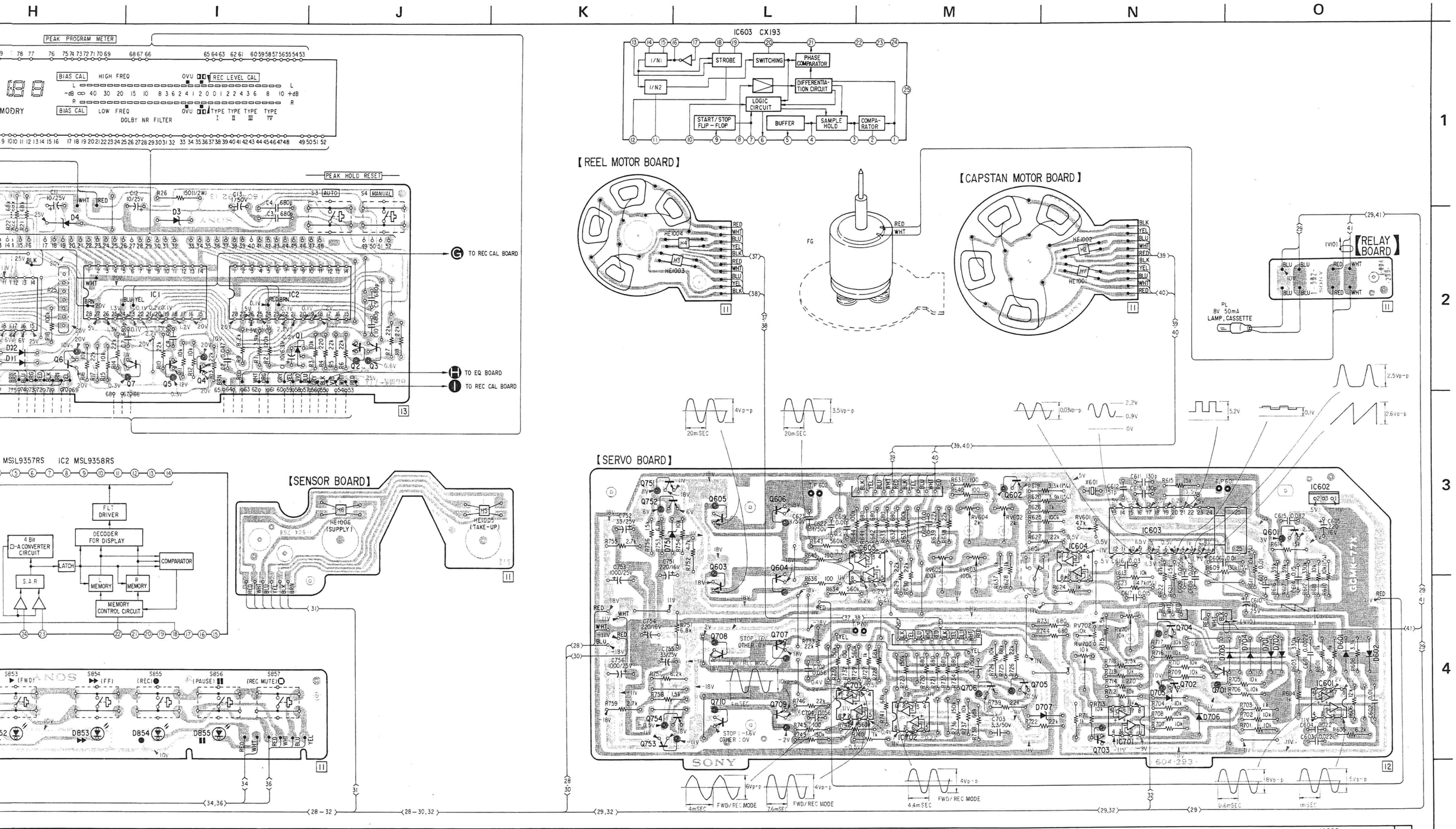
H
I
J
K
L
M
N
O
1
2
3
4
5
PEAK PROGRAM METER
BIAS CAL HIGH FREQ
REC LEVEL CAL
BIAS CAL LOW FREQ
DOLBY NR FILTER
TYPE I TYPE II TYPE III TYPE IV
PEAK HOLD RESET
S3 AUTO
S4 MANUAL
TO REC CAL BOARD
TO EQ BOARD
TO REC CAL BOARD
IC1 MSL9357RS
IC2 MSL9358RS
FLT DRIVER
DECODER FOR DISPLAY
4 Bit D-A CONVERTER CIRCUIT
LATCH
COMPARATOR
S.A.R
R MEMORY
MEMORY CONTROL CIRCUIT
S853 (FWD)
S854 (FF)
S855 (REC)
S856 (PAUSE)
S857 (REC MUTE)
【SENSOR BOARD】
HE1006 (SUPPLY)
HE1005 (TAKE-UP)
IC603 CX193
I/N1
I/N2
STROBE
SWITCHING
PHASE COMPARATOR
DIFFERENTIA-TION CIRCUIT
LOGIC CIRCUIT
START/STOP FLIP-FLOP
BUFFER
SAMPLE HOLD
COMPA-RATOR
【REEL MOTOR BOARD】
HE1004
HE1003
FG
【CAPSTAN MOTOR BOARD】
HE1002
HE1001
【RELAY BOARD】
PL 8V 50mA LAMP, CASSETTE
【SERVO BOARD】
IC601
IC602
IC603
IC604
IC605
IC701
IC702
IC703
STOP : -1.6V OTHER : 0V
FWD/REC MODE
SONY

• Semiconductor Lead Layouts

2SA1027R

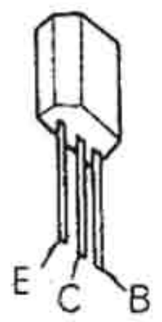

2SA1138
2SC2676

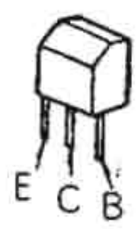

2SB646-A
2SC1364

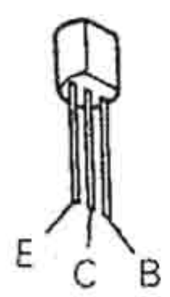

2SD637

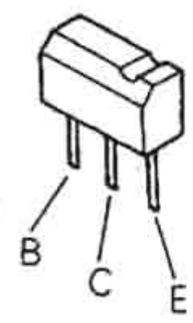

2SB731
2SD809

letter side

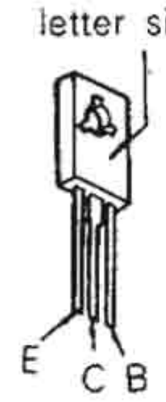

2SK120-2

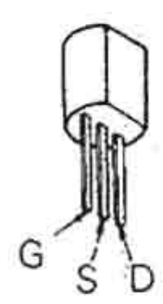

2SB642-P

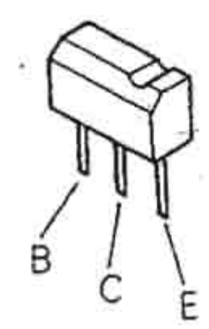

2SK245-1

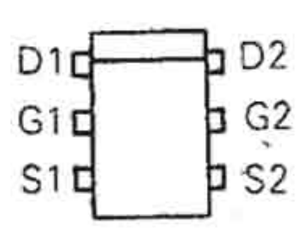

2SK125

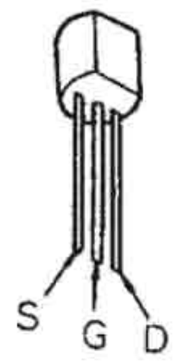

10E-2
1S1555
30DF2-FA
EQB01-06
HZ6B1L
HZ11C2L
HZ12C3L
HZ15-3L
HZ20-2L
HZ20-3L
HZ27-1L

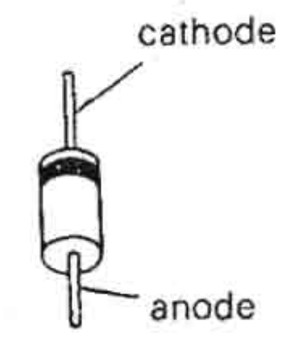

N13T1

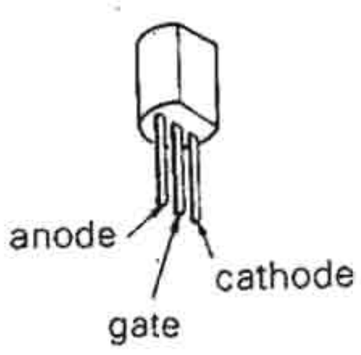

BR5525S
AA5525S
PY5535S
PG5525SX

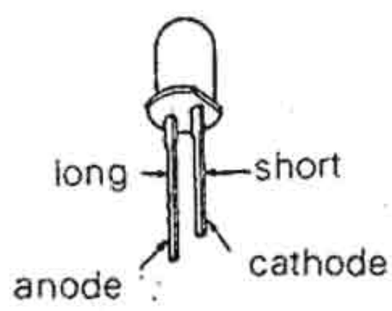

2SD666-A

MV-203V

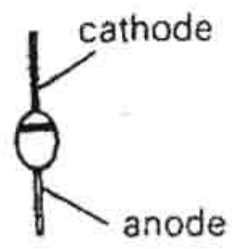

CX-193

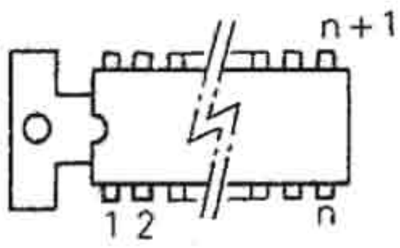

(Top view)

MB84069B

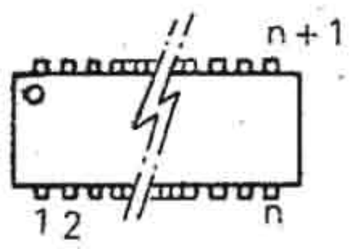

(Top view)

μPC78L05A

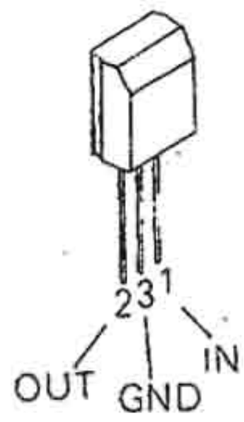

CX-174
NJM4560D
MSL9357RS
MSL9358RS
μPC339C
μPC4558C
μPD550C047

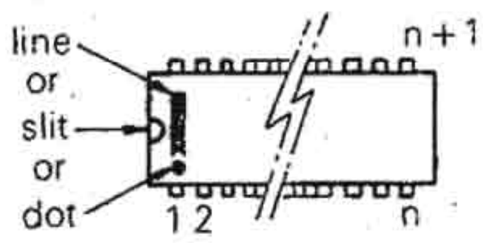

(Top view)

EXPLODED VIEWS AND PARTS LIST

5-1.

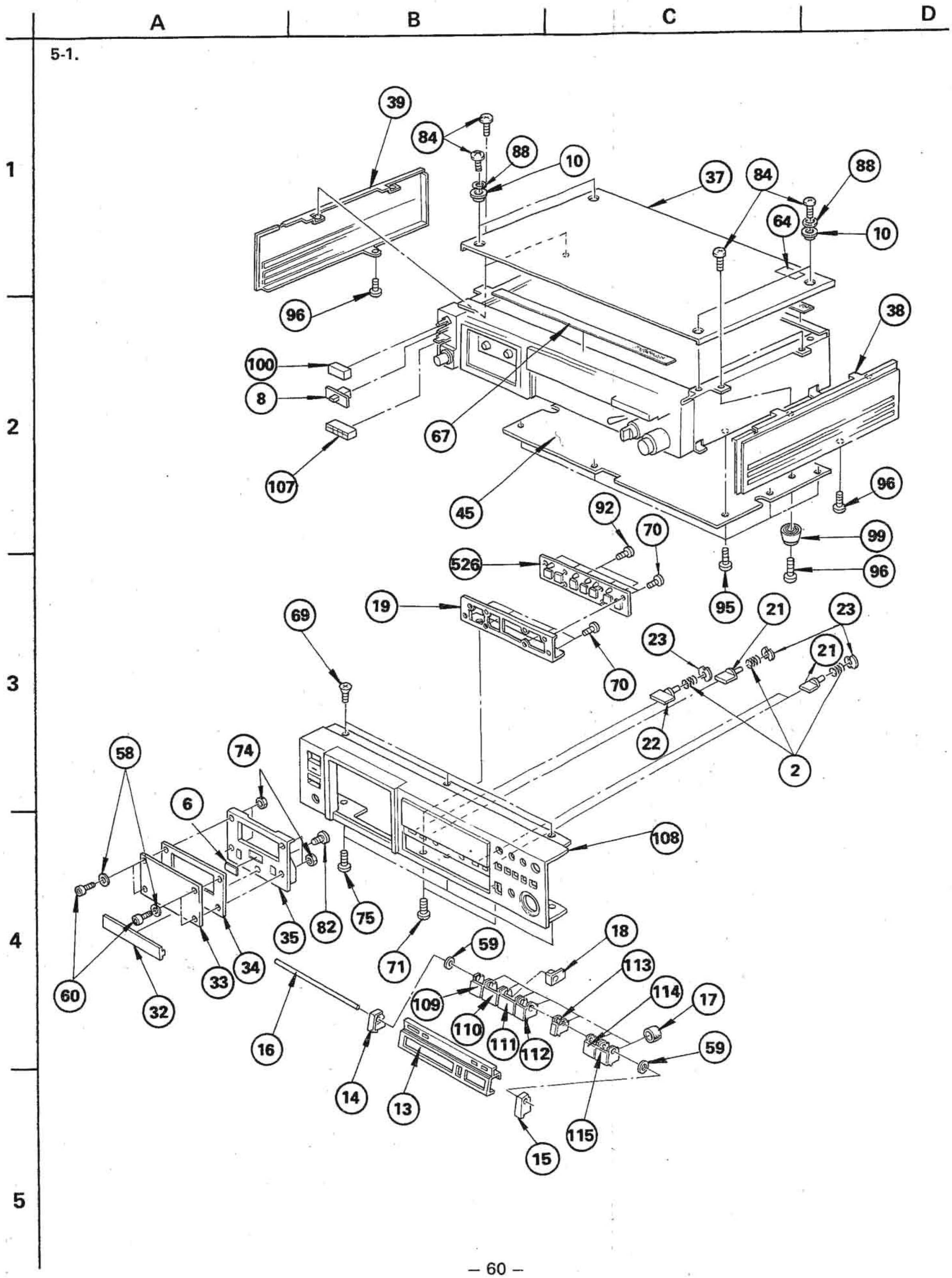

5-2.

A
B
C
D
1
2
3
4
5
95
89
42
95
9
47
525
95
26
86
80
513
25
57
533
530
532
543
79
24
542
95
531
44
541
540
91
80
28
534
91
507
80
48
79
86
105
27
95
106
7
49
104
102
103
101

5-3.

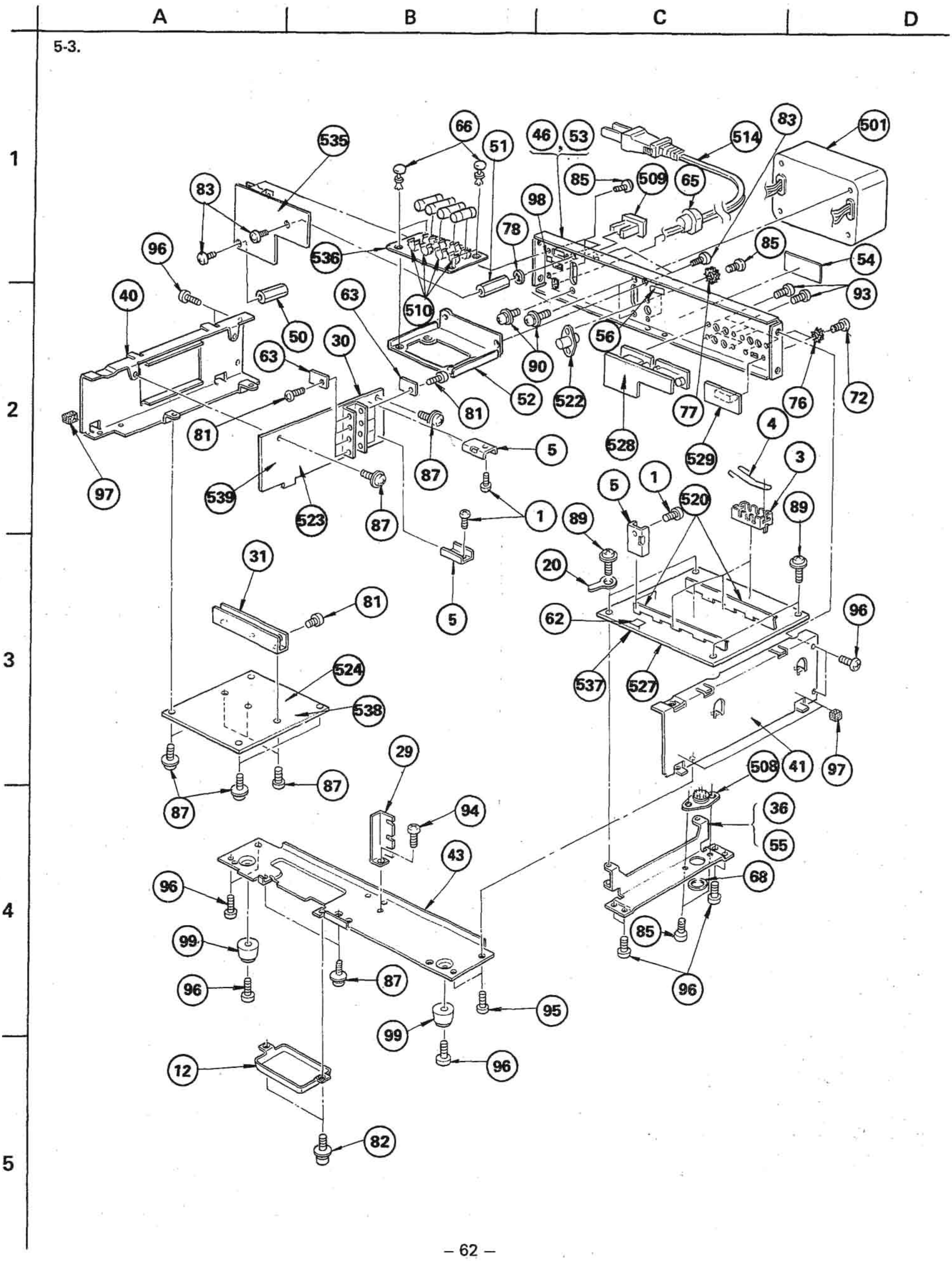
A
B
C
D
1
2
3
4
5
535
66
51
46
53
514
83
501
83
509
65
85
98
78
96
536
85
54
40
63
93
510
50
30
56
90
63
52
522
76
72
81
77
4
81
528
5
529
3
97
87
539
5
1
520
523
87
1
89
89
31
20
81
5
62
96
524
537
527
538
29
508
41
97
87
87
94
36
55
43
68
96
85
99
87
96
96
95
99
96
12
82

5-4.

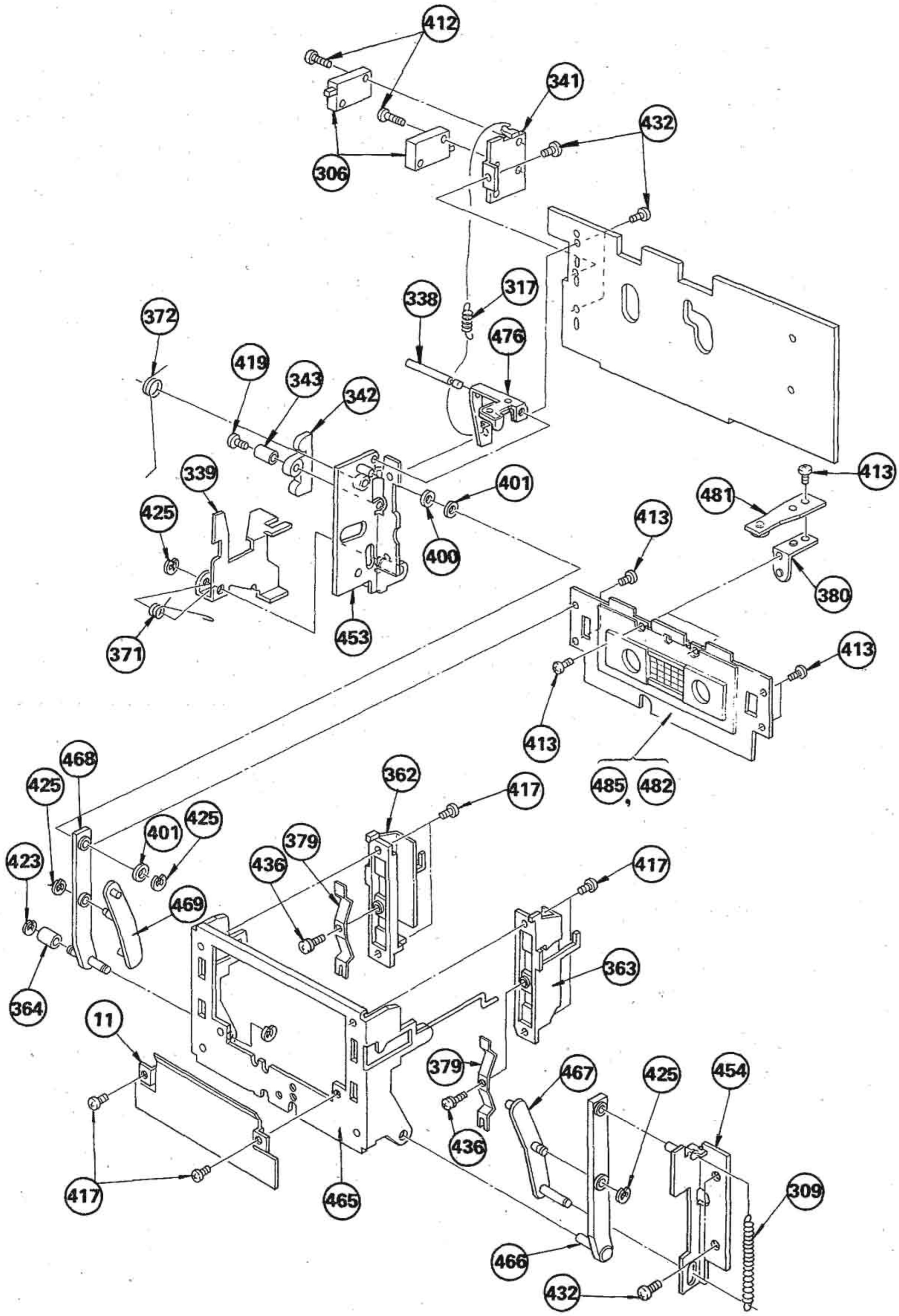
412
341
432
306
317
338
476
372
419
343
342
413
481
339
401
425
413
400
380
453
371
413
413
485
482
468
425
362
417
401
425
379
423
436
417
469
363
364
11
379
467
425
454
436
417
465
309
466
432

5-5.

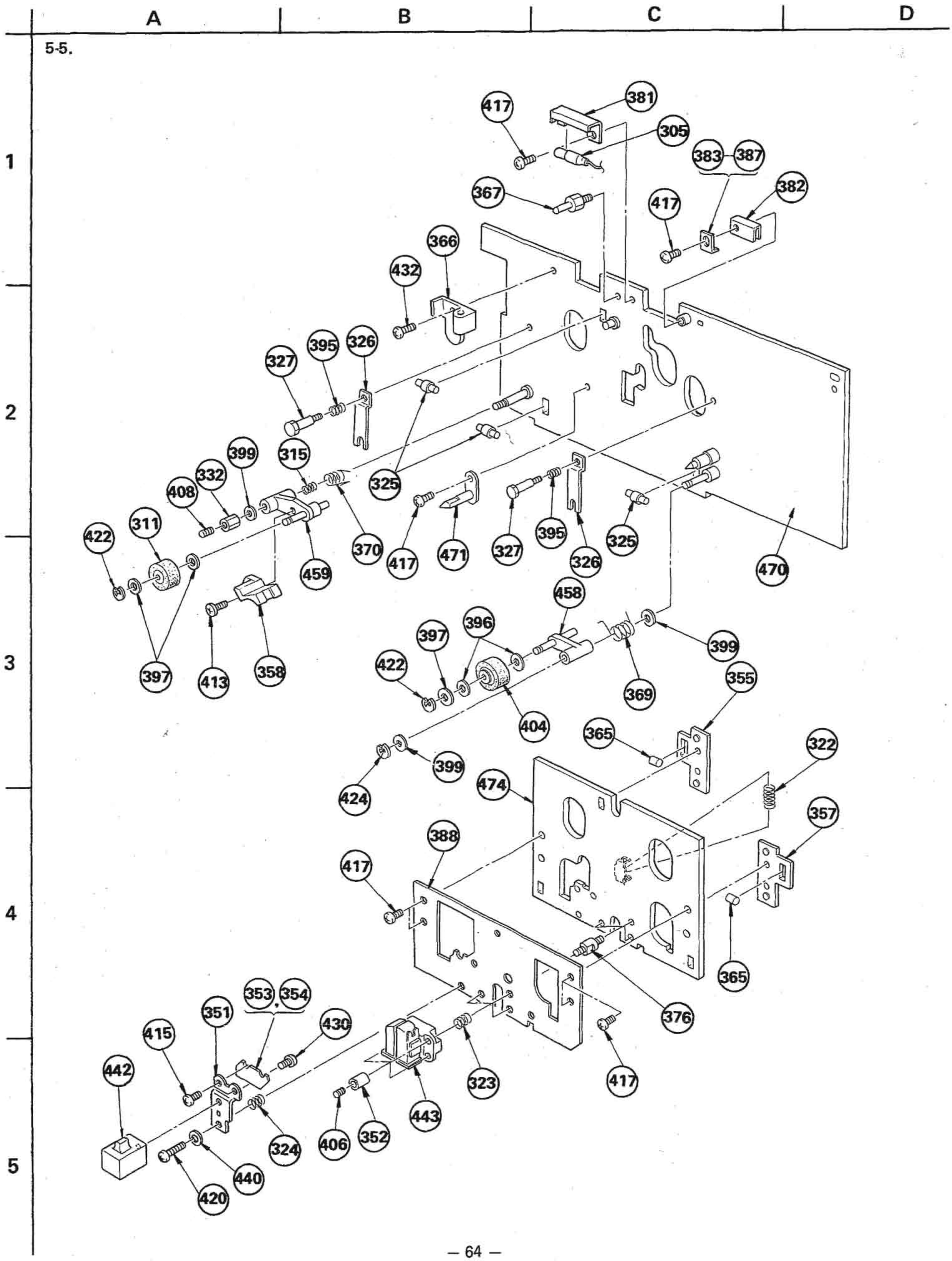
A
B
C
D
1
2
3
4
5
417
381
305
383
387
367
417
382
366
432
395
326
327
325
399
315
332
408
422
311
370
417
471
327
395
326
325
470
459
397
413
358
458
396
397
422
399
369
355
404
365
322
399
424
474
357
388
417
365
376
417
353
354
351
415
430
442
323
443
406
352
324
440
420

5-6.

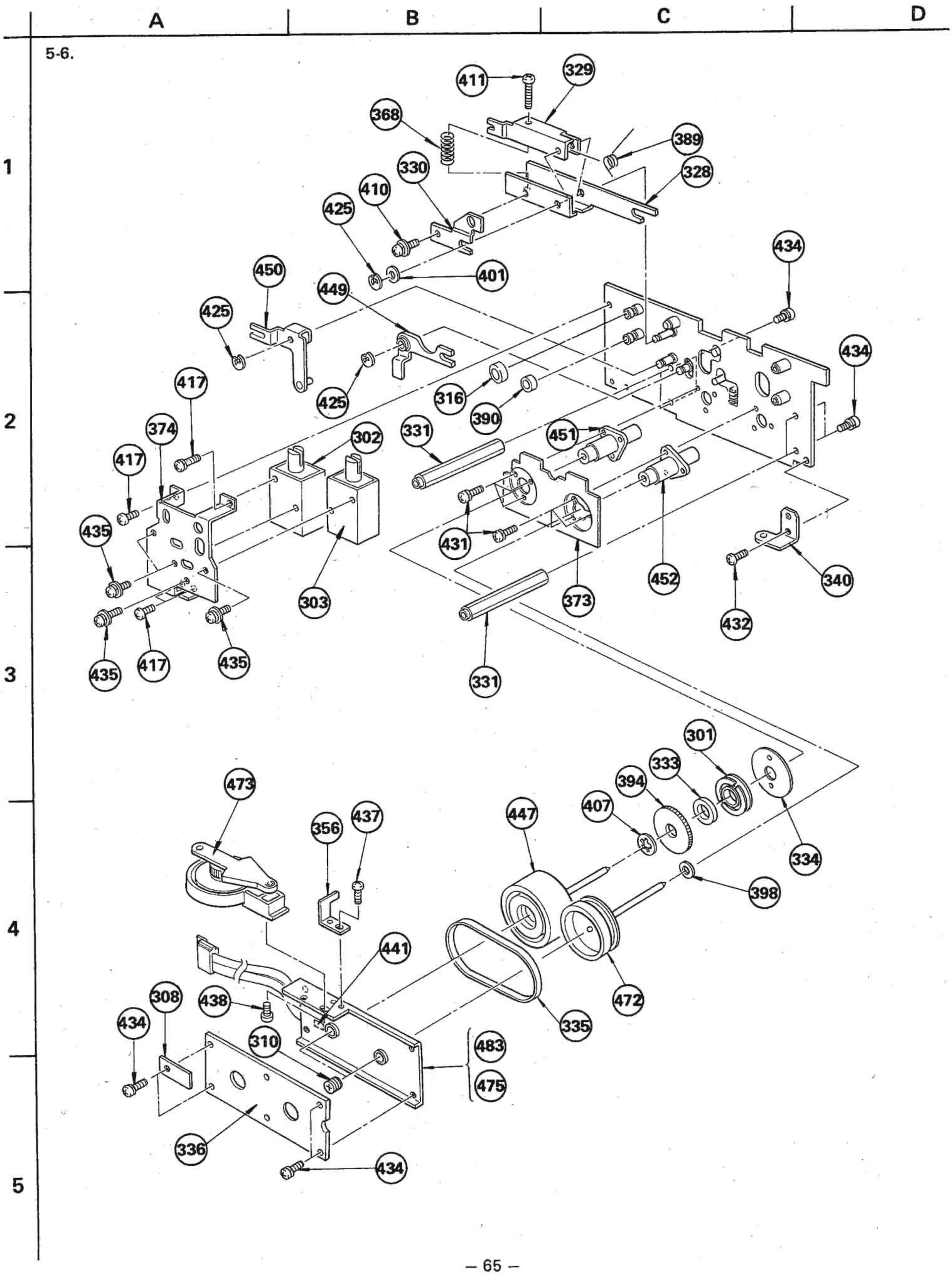
A
B
C
D
1
2
3
4
5
411
329
368
389
330
328
410
425
434
450
401
449
425
434
417
316
390
374
302
331
451
417
435
431
452
340
303
373
432
435
417
435
331
301
333
473
394
407
447
356
437
334
398
441
308
438
472
434
310
335
483
475
336
434

5-7.

A
B
C
D
1
2
3
4
5
397
457
456
350
349
419
426
400
401
409
360
393
403
448
480
397
321
423
461
440
397
421
402
441
405
462
321
463
378
375
439
319
416
313
423
397
484
479
414
399
361
477
304
395
400
464
337
416
312
318
347
346
400
425
345
391
417
455
414
425
348
399
344
377
359
319
400
460
400
391
414
397
397
441
478
414
414
307
417
446

No.	Part No.	Description
1	2-259-121-00	SCREW, TR
2	3-489-043-00	SPRING, COMPRESSION
3	3-565-774-00	HEAT SINK, IC
4	3-565-775-00	SPRING
5 ♠;	3-567-242-00	HEAT SINK
6 ♠;	3-567-253-00	EMBLEM, 3 HEAD
7	3-575-392-00	RING, PISTON
8	3-575-515-11	KNOB, SLIDE SWITCH
9	3-575-524-00	COVER, POWER SWITCH
10	3-576-298-00	ESCUTCHEON
11 ♠;	3-576-930-00	PLATE, SHIELD, HEAD
12	3-577-602-00	COVER, MECH DECK
13	3-577-603-00	SASH, CONTROL BUTTON
14	3-577-604-00	PLATE (L), SIDE, CONTROL BLOCK
15	3-577-605-00	PLATE (R), SIDE, CONTROL BLOCK
16 ♠;	3-577-606-00	SHAFT
17	3-577-607-00	SPACER, CONTROL BUTTON
18	3-577-615-00	GUIDE, SHAFT, CONTROL BUTTON
19 ♠;	3-577-624-00	BRACKET, CONTROL BLOCK
20	3-701-822-01	STOPPER, LEAD
21	3-577-638-01	PUSH BUTTON (A)
22	3-577-640-00	PUSH BUTTON (B)
23	3-577-644-00	SPACER, PUSH BUTTON
24 ♠;	3-577-645-00	SLIDER, EJECT
25 ♠;	3-577-646-00	GUIDE, EJECT
26 ♠;	3-577-647-00	CHASSIS (B), AMPLIFIER
27 ♠;	3-577-648-00	BRACKET (R), FL TUBE
28 ♠;	3-577-649-00	BRACKET (L), FL TUBE
29 ♠;	3-577-650-00	CLAMP, PC BOARD
30 ♠;	3-577-651-00	HEAT SINK, SERVO
31 ♠;	3-577-652-00	HEAT SINK, SYSTEM CONTROL
32	3-577-655-00	SASH, CASSETTE WINDOW
33	3-577-656-00	WINDOW, CASSETTE
34	3-577-657-00	PLATE, ORNAMENTAL
35	3-577-658-00	FRAME, CASSETTE WINDOW
36 ♠;	3-577-659-00	(US,Canadian,AEP)...PARTITION, INNER
37	3-577-660-01	COVER
38	3-577-662-00	PLATE, SIDE, ORNAMENTAL, RIGHT
39	3-577-663-00	PLATE, SIDE, ORNAMENTAL, LEFT
40 ♠;	3-577-664-00	PLATE, SIDE, LEFT
41 ♠;	3-577-665-00	PLATE, SIDE, RIGHT
42 ♠;	3-577-666-00	REINFORCEMENT, UPPER
43 ♠;	3-577-667-00	REINFORCEMENT, LOWER
44 ♠;	3-577-668-00	CHASSIS (A), AMPLIFIER
45 ♠;	3-577-669-00	(US,Canadian,AEP)...PLATE, BOTTOM
45 ♠;	3-577-688-00	(E).....PLATE, BOTTOM

No.	Part No.	Description
46	3-577-670-11	(US,Canadian)....PLATE, JACK
47	3-577-674-00	SPACER, SWITCH
48 ♠;	3-577-675-00	SPACER, CONTROL, REC CAL
49	3-577-676-00	SPACER, REC KNOB
50 ♠;	3-577-677-00	SUPPORT (A), HEXAGON
51 ♠;	3-577-678-00	SUPPORT (B), HEXAGON
52 ♠;	3-577-679-00	BRACKET, FUSE
53	3-577-680-01	(AEP)....PLATE, JACK
53	3-577-680-00	(E).....PLATE, JACK
54	3-577-682-00	(E).....LABEL, MODEL NUMBER
54	3-577-683-00	(AEP).....LABEL, MODEL NUMBER
54	3-577-685-00	(US,Canadian)...LABEL, MODEL NUMBER
55 ♠;	3-577-687-00	(E).....PARTITION, INNER
56	3-703-044-26	(US,Canadian)...CAUTION LABEL, FUSE
57	3-583-507-00	SPRING
58	3-701-438-11	WASHER, 2.5
59	3-701-438-21	WASHER
60	3-701-584-01	BOLT WITH HEXAGONAL HOLE, 2.6X8
61 ♠;	3-701-748-00	CLAMP
62 ♠;	3-701-946-07	(US,Canadian)...LABEL, FUSE
62 ♠;	3-701-986-13	(AEP,E).....LABEL, FUSE
63	3-703-037-00	INSULATOR, TO-220
64	3-703-079-21	(US).....LABEL, CAUTION (BACK)
65	3-703-244-00	BUSHING, CORD
66	4-812-134-00	RIVET, NYLON, 3.5
67	4-869-978-00	SPACER
68	4-847-555-00	(E).....PAPER, VOLTAGE INDICATING
69	7-621-559-35	SCREW +K 2.6X5
70	7-621-770-44	SCREW +B 2X5
71	7-621-770-87	SCREW +B 2.6X5
72	7-621-773-95	SCREW +B 2.6X6
73	.....	
74	7-622-327-01	N 2.6 TYPE 3
75	7-621-775-25	SCREW +B 2.6X5
76	7-623-421-07	LW 2.6, TYPE B
77	7-623-422-07	LW 3, TYPE B
78	7-623-310-07	WASHER, 4DIA
79	7-628-254-15	SCREW +PS 2.6X6
80	7-628-254-25	SCREW +PS 2.6X8
81	7-682-146-20	SCREW +P 3X5
82	7-682-545-09	SCREW +B 3X4
83	7-682-547-01	SCREW +B 3X6
84	7-682-547-04	SCREW +B 3X6
85	7-682-547-09	SCREW +B 3X6

NOTE:
- Items with no part number and no description are not stocked because they are seldom required for routine service.
- Items marked " ♠ " are not stocked since they are seldom required for routine service. Some delay should be anticipated when ordering these items.
- Due to standardization, parts with part numbers (Δ-ΔΔΔ-ΔΔΔ-XX or Δ-ΔΔΔΔ-ΔΔΔ-X) may be different from those used in the set.

CAPACITORS:
- All capacitors are in μF. Common capacitors are omitted. Refer to the following lists for their part numbers. MF:μF, PF:μμF.

RESISTORS
- All resistors are in ohms. Common 1/4W, 1/8W and 1/16W carbon resistors are omitted. Refer to the following lists for their part numbers.
- F : nonflammable

COILS
- MMH : mH, UH : μH

GENERAL SECTION

No.	Part No.	Description
86	7-682-647-01	SCREW +PS 3X6
87	7-682-947-01	SCREW +PSW 3X6
88	7-688-003-11	WASHER, 3(MIDDLE)N;-N4
89	7-682-948-01	SCREW +PSW 3X8
90	7-682-961-01	SCREW +PSW 4X8
91	7-685-133-11	SCREW +P 2.6X6 TYPE2 SLIT
92	7-685-534-21	SCREW +BTP 2.6X8 TYPE2 SLIT
93	7-685-545-29	SCREW +BTP 3X6 TYPE2 SLIT
94	7-685-870-01	SCREW +BVTT 3X5 (S)
95	7-685-871-01	SCREW +BVTT 3X6 (S)
96	7-685-872-01	SCREW +BVTT 3X8 (S)
97	9-911-841-XX	CUSHION
98	9-911-863-XX	(AEP,E)...SHEET, INSULATING
99	X-3556-910-0	FOOT ASSY, MF
100	X-3575-502-0	KNOB ASSY, POWER
101	X-3577-602-0	KNOB (L) ASSY, REC
102	X-3577-603-0	KNOB ASSY, MODE
103	X-3577-604-0	KNOB ASSY, LINE OUT
104	X-3577-605-0	KNOB (R) ASSY, REC
105	X-3577-606-0	KNOB ASSY, SQUARE
106	X-3577-607-0	KNOB ASSY, REC CAL
107	X-3577-608-0	KNOB ASSY, EJECT
108	X-3577-609-0	PANEL ASSY
109	X-3577-610-1	KNOB ASSY, REW
110	X-3577-611-1	KNOB ASSY, STOP
111	X-3577-612-1	KNOB ASSY, FWD
112	X-3577-613-1	KNOB ASSY, FF
113	X-3577-614-1	KNOB ASSY, REC
114	X-3577-615-1	KNOB ASSY, PAUSE
115	X-3577-616-1	KNOB ASSY, REC MUTE

ACCESSORY & PACKING MATERIAL

No.	Part No.	Description
131	1-551-734-11	CORD, CONNECTION (RK- 74A)
132	3-577-672-00	CUSHION, FRONT
133	3-577-673-00	CUSHION, REAR
134	3-577-686-00	INDIVIDUAL CARTON
135	3-701-630-00	BAG, POLYETHYLENE
136	3-783-485-11	(AEP,E).....MANUAL, INSTRUCTION
136	3-783-485-21	(US).....MANUAL, INSTRUCTION
136	3-783-485-31	(Canadian)...MANUAL, INSTRUCTION
136	3-783-485-41	(AEP).....MANUAL, INSTRUCTION
136	3-783-485-51	(Canadian)...MANUAL, INSTRUCTION
137	3-793-481-13	INSTRUCTION
138	3-793-828-11	QUESTIONNAIRE
139	4-809-251-00	BAG, POLYETHYLENE
140	X-3701-105-0	ROD ASSY, CLEANING, HEAD

MECHANISM SECTION

No.	Part No.	Description
301	1-422-032-00	COIL
302	1-454-270-00	SOLENOID, PLUNGER
303	1-454-271-00	SOLENOID, PLUNGER
304	1-454-272-00	SOLENOID, PLUNGER
305	1-518-306-00	LAMP, PILOT
306	1-552-268-00	SWITCH, SLIDE
307 ♠	;1-604-268-00	PC BOARD, SENSOR
308 ♠	;1-604-269-00	PC BOARD, EXTENSION
309	3-140-235-XX	SPRING, TENSION
310	3-489-073-21	SCREW, THRUST
311	3-491-020-00	PINCH ROLLER
312	3-531-760-00	CLAW, REEL SPINDLE
313	3-534-274-XX	SPRING, TENSION
314	.....	
315	3-537-213-00	SPRING, COMPRESSION
316	.....	
317	3-541-231-00	SPRING, TENSION
318	3-558-482-00	CAP, REEL
319	3-558-708-21	WASHER, STOPPER
320	.....	
321	3-564-027-01	FELT, LIMITER
322	3-564-035-00	SPRING, COMPRESSION
323	3-564-121-00	SPRING, COMPRESSION
324	3-573-470-00	SPRING, COMPRESSION
325	3-576-801-00	ROLLER, BASE, HEAD
326 ♠	;3-576-802-00	RETAINER, ROLLER
327	3-576-803-00	SHAFT, RETAINER, ROLLER
328 ♠	;3-576-804-00	LEVER (A), HEAD UP
329 ♠	;3-576-805-00	LEVER (B), HEAD UP
330 ♠	;3-576-806-00	DISK, ARM, TAKE-UP
331 ♠	;3-576-807-00	SUPPORT (B)
332	3-576-808-00	ADJUSTOR, PINCH ROLLER
333	3-576-809-00	MAGNET, FG
334 ♠	;3-576-810-00	PLATE, RETURN CIRCUIT
335	3-576-812-00	BELT, CAPSTAN
336 ♠	;3-576-815-00	REINFORCEMENT, BASE
337 ♠	;3-576-816-00	CASE, SHIELD, RM
338 ♠	;3-576-819-00	SHAFT, LEVER, GB
339 ♠	;3-576-820-00	ARM, LOCK
340 ♠	;3-576-821-00	BRACKET, CHASSIS, MECHANISM
341 ♠	;3-576-822-00	HOLDER (A), SE
342 ♠	;3-576-823-00	ARM, E
343	3-576-824-00	COLLAR
344	3-576-826-00	SCREW, ADJUSTMENT
345 ♠	;3-576-827-00	PLATE, BRAKE

OTE:
Items with no part number and no description are not stocked because they are seldom required for routine service.

Items marked " ♠ " are not stocked since they are seldom required for routine service. Some delay should be anticipated when ordering these items.

Due to standardization, parts with part numbers (Δ-ΔΔΔ-ΔΔΔ-XX or Δ-ΔΔΔΔ-ΔΔΔ-X) may be different from those used in the set.

CAPACITORS:
- All capacitors are in μF. Common capacitors are omitted. Refer to the following lists for their part numbers. MF:μF, PF:μμF.

RESISTORS
- All resistors are in ohms. Common 1/4W, 1/8W and 1/16W carbon resistors are omitted. Refer to the following lists for their part numbers.
- F : nonflammable

COILS
- MMH : mH, UH : μH

MECHANISM SECTION

No.	Part No.	Description
346	♠;3-576-828-00	SHAFT, SPRING, BRAKE
347	3-576-829-00	SPRING
348	♠;3-576-830-00	ARM, BRAKE
349	♠;3-576-831-00	LEVER, SELECT, MODE
350	♠;3-576-832-00	GUIDE, SELECTOR, MODE
351	♠;3-576-833-01	BRACKET, HEAD, ERASE
352	3-576-834-00	NUT, LOCK
353	3-576-835-01	SEAM, ADJUSTMENT, ERASE HEAD
354	3-576-835-11	SEAM, ADJUSTMENT, ERASE HEAD
355	♠;3-576-836-00	RETAINER (L), ROLLER
356	♠;3-576-825-00	RETAINER, TU PULLEY
357	♠;3-576-838-00	RETAINER (R), ROLLER
358	3-576-839-00	GUIDE, TAPE
359	3-576-840-00	RING, TABLE, REEL
360	3-576-841-00	PULLEY, LIMITER
361	♠;3-576-842-00	STOPPER, B.T
362	3-576-843-00	GUIDE (L), HOLDER
363	3-576-844-00	GUIDE (R), HOLDER
364	3-576-845-00	ROLLER
365	3-576-909-00	ROLLER (C)
366	♠;3-576-910-00	HOLDER, GB
367	3-576-911-00	PIN (A), POSITIONING, HALF
368	3-576-912-00	SPRING, COMPRESSION
369	3-576-913-00	SPRING (T)
370	3-576-914-00	SPRING (S)
371	3-576-915-00	SPRING
372	3-576-916-00	SPRING
373	♠;3-576-917-00	PLATE, SHIELD
374	♠;3-576-918-00	BRACKET (B), CHASSIS, MECH
375	3-576-919-00	BELT, TAKE-UP
376	3-576-920-00	SHAFT, SUPPORT, HEAD
377	3-576-921-00	SPRING, COMPRESSION
378	3-576-922-00	SPRING, COMPRESSION
379	3-576-924-00	SPRING
380	♠;3-576-928-00	RETAINER, SPRING
381	♠;3-576-929-00	HOLDER, LAMP
382	♠;3-576-948-00	STOPPER, CHASSIS, HEAD
383	3-576-950-01	SEAM, STOPPER (T0.1)
384	3-576-950-11	SEAM, STOPPER (T0.2)
385	3-576-950-21	SEAM, STOPPER (T0.3)
386	3-576-950-31	SEAM, STOPPER (T0.4)
387	3-576-950-41	SEAM, STOPPER (T0.5)
388	♠;3-576-951-00	SHIELD, CHASSIS, HEAD
389	3-576-953-00	SPRING
390	♠;3-576-954-00	RETAINER, SOLENOID

MECHANISM SECTION

No.	Part No.	Description
391	3-576-958-00	SHOE, BRAKE
392	♠;3-576-959-00	RETAINER, TU PULLEY
393	3-576-960-00	SPRING, COMPRESSION
394	3-576-961-00	PLATE, FG
395	3-701-441-01	WASHER, 4DIA(T0.13)
396	3-701-437-01	WASHER
397	3-701-437-11	WASHER (T0.25)
398	3-701-438-21	WASHER (T0.5)
399	3-701-439-21	WASHER
400	3-701-441-11	WASHER (T0.25)
401	3-701-441-21	WASHER (T0.25)
402	3-701-443-11	WASHER (T0.5)
403	3-701-443-21	WASHER, 5 (T0.5)
404	3-701-455-00	PINCH ROLLER
405	3-701-822-00	RETAINER, LEAD
406	7-621-732-08	SET-SCT,HEX. 2X3 FLAT POINT
407	4-312-164-00	RING
408	7-621-735-09	SET-SCT,HEX. 2.6X4
409	7-621-759-25	+PSW, 2.6X4
410	7-621-759-35	+PSW, 2.6X5
411	7-621-775-75	SCREW +B 2.6X14
412	7-621-770-96	SCREW +B 2X8
413	7-621-772-10	SCREW +B 2X4
414	7-621-772-15	SCREW +B 2X4
415	7-621-772-18	SCREW +B 2X4
416	7-621-773-93	SCREW +B 2.6X3
417	7-621-775-10	SCREW +B 2.6X4
418	.....	
419	7-621-775-25	SCREW +B 2.6X5
420	7-621-775-40	SCREW +B 2.6X8
421	7-623-105-12	W 2,MIDDLE
422	7-624-101-04	STOP RING 1.2 (E TYPE)
423	7-624-102-04	STOP RING 1.5, TYPE -E
424	7-624-105-04	STOP RING 2.3, TYPE -E
425	7-624-106-04	STOP RING 3.0, TYPE -E
426	7-624-108-04	STOP RING 4.0, TYPE -E
427	7-624-118-01	RING, RETAINING E-2.5
428	.....	
429	.....	
430	7-627-552-38	SCREW,PRECISION +P 1.7X3
431	7-628-254-15	SCREW +PS 2.6X6
432	7-682-546-09	SCREW +B 3X5
433	.....	
434	7-682-647-01	SCREW +PS 3X6
435	7-682-946-01	SCREW +PSW 3X5

NOTE:

- Items with no part number and no description are not stocked because they are seldom required for routine service.
- Items marked " ♠ " are not stocked since they are seldom required for routine service. Some delay should be anticipated when ordering these items.
- Due to standardization, parts with part numbers (Δ-ΔΔΔ-ΔΔΔ-XX or Δ-ΔΔΔΔ-ΔΔΔ-X) may be different from those used in the set.

CAPACITORS:

- All capacitors are in μF. Common capacitors are omitted. Refer to the following lists for their part numbers. MF:μF, PF:μμF.

RESISTORS

- All resistors are in ohms. Common 1/4W, 1/8W and 1/16W carbon resistors are omitted. Refer to the following lists for their part numbers.
- F : nonflammable

COILS

- MMH : mH, UH : μH

MECHANISM SECTION

No.	Part No.	Description
436	7-687-202-21	PTPWH 2X4, TYPE 2, WITH SLIT
437	7-685-645-11	SCREW +BVTP 3X6 TYPE2 N-S
438	7-687-246-21	SCREW,TOTSU PTPWH 3X8,TYPE2
439	7-688-001-11	W 2, MIDDLE
440	7-688-002-12	W 2.6, MIDDLE
441	8-719-814-11	DIODE THS102 (TH1001-TH1006)
442	8-825-604-30	HEAD, ERASE
443	8-825-728-30	UNIT, RECORD P/B COMBI
444	.....	
445	.....	
446	A-2131-003-A	DRUM COMPLETE ASSY, BT
447	A-2133-084-A	FLYWHEEL (T) COMPLETE ASSY
448	A-2138-004-A	HOLDER COMPLETE ASSY, MAGNET
449 ♠	X-3576-801-0	LEVER ASSY, PRESS
450 ♠	X-3576-802-0	LEVER ASSY, CHANGE
451	X-3576-803-0	HOLDER (A) ASSY, BEARING
452	X-3576-804-0	HOLDER (B) ASSY, BEARING
453 ♠	X-3576-805-0	PLATE (L) ASSY, FULCRUM
454 ♠	X-3576-806-0	PLATE (R) ASSY, FULCRUM
455	X-3576-807-0	COVER ASSY, SUB CHASSIS
456	X-3576-812-0	ARM ASSY, TAKE-UP
457	X-3576-813-0	PULLEY ASSY, TAKE-UP
458	X-3576-815-0	PINCH LEVER (T) ASSY
459	X-3576-816-0	PINCH LEVER (S) ASSY
460	X-3576-817-0	TABLE (B) ASSY, REEL
461	X-3576-819-0	PULLEY (2) ASSY, MOTOR, REEL
462	X-3576-821-0	ARM (2) ASSY, FR
463	X-3576-822-0	IDLER ASSY, FR
464 ♠	X-3576-823-0	ARM (1) ASSY, FR
465	X-3576-824-0	HOLDER ASSY, CASSETTE
466 ♠	X-3576-825-0	LEVER ASSY (R), SWING
467	X-3576-826-0	ARM ASSY (R), CONNECT
468 ♠	X-3576-827-0	LEVER ASSY (L), SWING
469	X-3576-828-0	ARM ASSY (L), CONNECT
470	X-3576-830-0	CHASSIS ASSY, MECHANISM
471	X-3576-831-0	GUIDE ASSY, CASSETTE
472	X-3576-832-0	FLYWHEEL (S) ASSY
473	X-3576-833-0	SE ASSY
474	X-3576-834-0	CHASSIS ASSY, HEAD
475 ♠	X-3576-838-1	(Canadian,AEP,E)....MOTOR BASE ASSY
476 ♠	X-3576-839-1	GB LEVER ASSY
477 ♠	X-3576-840-1	MOTOR PULLY ASSY
478 ♠	X-3576-841-1	SUPPLY REEL SPINDLE ASSY
479 ♠	X-3576-842-1	(Canadian,AEP,E)...SUB CHASSIS ASSY
480 ♠	X-3576-843-1	HP HOLDER ASSY

MECHANISM SECTION

No.	Part No.	Description
481 ♠	X-3576-844-1	RETAINER SPRING ASSY
482 ♠	X-3576-845-1	(Canadian,AEP,E)...BACK PLATE ASSY
483	X-3576-846-1	(US).....MOTOR BASE ASSY
484 ♠	X-3576-847-1	(US).....SUB CHASSIS ASSY
485 ♠	X-3576-848-1	(US).....BACK PLATE ASSY

NOTE:
- Items with no part number and no description are not stocked because they are seldom required for routine service.
- Items marked " ♠ " are not stocked since they are seldom required for routine service. Some delay should be anticipated when ordering these items.
- Due to standardization, parts with part numbers (Δ-ΔΔΔ-ΔΔΔ-XX or Δ-ΔΔΔΔ-ΔΔΔ-X) may be different from those used in the set.

CAPACITORS:
- All capacitors are in μF. Common capacitors are omitted. Refer to the following lists for their part numbers. MF:μF, PF:μμF.

RESISTORS
- All resistors are in ohms. Common 1/4W, 1/8W and 1/16W carbon resistors are omitted. Refer to the following lists for their part numbers.
- F : nonflammable

COILS
- MMH : mH, UH : μH

The components identified by shading and mark ⚠ are critical for safety. Replace only with part number specified.

Les composants identifiés par une trame et une marque ⚠ sont critiques pour la sécurité. Ne les remplacer que par une pièce portant le numéro spécifié.

ELECTRICAL PARTS

Ref.No.	Part No.	Description
501	⚠1-447-001-00	(US,Canadian)...TRANSFORMER, POWER
501	⚠1-447-002-00	(AEP).....TRANSFORMER, POWER
501	⚠1-447-033-00	(E).....TRANSFORMER, POWER
502	♠;1-508-809-00	(AEP).....BASE POST (14MM) 2P
503	♠;1-508-878-00	BASE POST
504	♠;1-508-879-00	BASE POST
505	♠;1-508-880-00	BASE POST
506	♠;1-508-882-00	BASE POST
507	1-519-223-00	INDICATOR TUBE, FLUORESCENT
508	⚠1-526-576-31	(E).....SELECTOR, POWER VOLTAGE
509	⚠1-526-609-12	(US,Canadian)...CONNECTOR, AC OUTLET
510	⚠1-533-131-00	(AEP,E).....HOLDER, FUSE
511	♠;1-535-116-00	TERMINAL
512	♠;1-535-135-00	(AEP).....BASE POST 14MM (10MM PITCH)
513	1-553-206-00	SWITCH, SLIDE
514	⚠1-553-386-00	(E).....CORD, POWER
514	⚠1-553-701-00	(US,Canadian).....CORD, POWER
514	⚠1-555-795-00	(AEP).....CORD, POWER
515	♠;1-560-061-00	PIN, CONNECTOR 3P
516	♠;1-560-062-00	PIN, CONNECTOR 4P
517	♠;1-560-063-00	PIN, CONNECTOR 5P
518	♠;1-560-064-00	PIN, CONNECTOR 6P
519	♠;1-560-200-00	BASE POST, MCD CONNECTOR 2P
520	♠;1-560-242-41	BUS BAR 11P
521	♠;1-560-265-00	(AEP).....BASE POST (U-TYPE)
522	1-561-598-00	SOCKET 4P
523	♠;1-604-293-00	PC BOARD, SERVO
524	♠;1-604-294-00	PC BOARD, SYSTEM CONTROL
525	♠;1-604-295-00	PC BOARD, TIMER SWITCH
526	♠;1-604-296-00	PC BOARD, CONTROL SW
527	♠;1-604-387-00	PC BOARD, REC/PB
528	♠;1-604-388-00	PC BOARD, INPUT
529	♠;1-604-389-00	PC BOARD, FILTER SW
530	♠;1-604-390-00	PC BOARD, HEADPHONE
531	♠;1-604-391-00	PC BOARD, REC CAL
532	♠;1-604-392-00	PC BOARD, EQ
533	♠;1-604-393-00	PC BOARD, OUTPUT
534	♠;1-604-394-00	PC BOARD, METER
535	⚠1-604-892-00	(US,Canadian,AEP) ....PC BOARD, LINE FILTER
536	⚠1-605-010-00	PC BOARD, FUSE
537	♠;A-2010-195-A	(US,Canadian) ....MOUNTED PCB, RECORD/PLAYBACK
537	♠;A-2010-195-A	(AEP,E)....MOUNTED PCB, RECORD/PLAYBACK
538	♠;A-2019-132-A	MOUNTED PCB, SYSTEM CONTROL
539	♠;A-2020-070-A	MOUNTED PCB, SERVO
540	♠;A-2029-067-A	MOUNTED PCB, METER
541	♠;A-2095-362-A	MOUNTED PCB, CAL, REC
542	♠;A-2095-363-A	MOUNTED PCB, EQUALIZER
543	♠;A-2095-364-A	MOUNTED PCB, OUTPUT

ELECTRICAL PARTS

Ref.No.	Part No.	Description			
C013	1-123-380-00	ELECT	1MF	20%	50V
C101	1-107-300-00	MICA	100PF	5%	100V
C105	1-107-300-00	MICA	100PF	5%	100V
C106	1-107-300-00	MICA	100PF	5%	100V
C108	1-123-453-00	ELECT	4.7MF	20%	50V
C109	1-107-300-00	MICA	100PF	5%	100V
C114	1-130-627-00	FILM	0.039MF	5%	50V
C116	1-130-341-00	FILM	0.056MF	3%	100V
C117	1-130-339-00	FILM	0.0056MF	3%	100V
C118	1-130-340-00	FILM	0.018MF	3%	100V
C119	1-123-453-00	ELECT	4.7MF	20%	50V
C121	1-107-300-00	MICA	100PF	5%	100V
C122	1-123-544-00	ELECT	2.2MF	20%	50V
C123	1-107-298-00	MICA	82PF	5%	100V
C127	1-123-544-00	ELECT	2.2MF	20%	50V
C131	1-130-627-00	FILM	0.039MF	5%	50V
C133	1-130-341-00	FILM	0.056MF	3%	100V
C134	1-130-339-00	FILM	0.0056MF	3%	100V
C135	1-130-340-00	FILM	0.018MF	3%	100V
C136	1-123-453-00	ELECT	4.7MF	20%	50V
C137	1-123-228-00	ELECT	1MF	20%	50V
C138	1-123-453-00	ELECT	4.7MF	20%	50V
C139	1-123-544-00	ELECT	2.2MF	20%	50V
C141	1-130-307-00	FILM	0.027MF	5%	100V
C151	1-130-302-00	FILM	0.016MF	5%	100V
C152	1-130-307-00	FILM	0.027MF	5%	100V
C153	1-130-305-00	FILM	0.022MF	5%	100V
C154	1-130-307-00	FILM	0.027MF	5%	100V
C155	1-130-309-00	FILM	0.033MF	5%	100V
C156	1-130-307-00	FILM	0.027MF	5%	100V
C160	1-123-232-00	ELECT	4.7MF	20%	50V
C161	1-123-232-00	ELECT	4.7MF	20%	50V
C201	1-107-300-00	MICA	100PF	5%	100V
C205	1-107-300-00	MICA	100PF	5%	100V
C206	1-107-300-00	MICA	100PF	5%	100V
C208	1-123-453-00	ELECT	4.7MF	20%	50V
C209	1-107-300-00	MICA	100PF	5%	100V
C214	1-130-627-00	FILM	0.039MF	5%	50V
C216	1-130-341-00	FILM	0.056MF	3%	100V
C217	1-130-339-00	FILM	0.0056MF	3%	100V
C218	1-130-340-00	FILM	0.018MF	3%	100V
C219	1-123-453-00	ELECT	4.7MF	20%	50V
C221	1-107-300-00	MICA	100PF	5%	100V
C222	1-123-544-00	ELECT	2.2MF	20%	50V
C223	1-107-298-00	MICA	82PF	5%	100V
C227	1-123-544-00	ELECT	2.2MF	20%	50V
C231	1-130-627-00	FILM	0.039MF	5%	50V
C233	1-130-341-00	FILM	0.056MF	3%	100V
C234	1-130-339-00	FILM	0.0056MF	3%	100V
C235	1-130-340-00	FILM	0.018MF	3%	100V

NOTE:
- Items with no part number and no description are not stocked because they are seldom required for routine service.
- Items marked " ♠ " are not stocked since they are seldom required for routine service. Some delay should be anticipated when ordering these items.
- Due to standardization, parts with part numbers (Δ-ΔΔΔ-ΔΔΔ-XX or Δ-ΔΔΔΔ-ΔΔΔ-X) may be different from those used in the set.

CAPACITORS:
- All capacitors are in μF. Common capacitors are omitted. Refer to the following lists for their part numbers. MF:μF, PF:μμF.

RESISTORS
- All resistors are in ohms. Common 1/4W, 1/8W and 1/16W carbon resistors are omitted. Refer to the following lists for their part numbers.
- F : nonflammable

COILS
- MMH : mH, UH : μH

The components identified by shading and mark ⚠ are critical for safety. Replace only with part number specified.

Les composants identifiés par une trame et une marque ⚠ sont critiques pour la sécurité. Ne les remplacer que par une pièce portant le numéro spécifié.

ELECTRICAL PARTS

Ref.No.	Part No.	Description			
C236	1-123-453-00	ELECT	4.7MF	20%	50V
C237	1-123-228-00	ELECT	1MF	20%	50V
C238	1-123-453-00	ELECT	4.7MF	20%	50V
C239	1-123-544-00	ELECT	2.2MF	20%	50V
C241	1-130-307-00	FILM	0.027MF	5%	100V
C251	1-130-302-00	FILM	0.016MF	5%	100V
C252	1-130-307-00	FILM	0.027MF	5%	100V
C253	1-130-305-00	FILM	0.022MF	5%	100V
C254	1-130-307-00	FILM	0.027MF	5%	100V
C255	1-130-309-00	FILM	0.033MF	5%	100V
C256	1-130-307-00	FILM	0.027MF	5%	100V
C260	1-123-232-00	ELECT	4.7MF	20%	50V
C261	1-123-232-00	ELECT	4.7MF	20%	50V
C511	1-123-380-00	ELECT	1MF	20%	50V
C514	1-123-380-00	ELECT	1MF	20%	50V
C518	1-123-369-00	ELECT	4.7MF	20%	50V
C521	1-123-369-00	ELECT	4.7MF	20%	50V
C522	1-123-228-00	ELECT	1MF	20%	50V
C524	1-130-627-00	FILM	0.039MF	5%	50V
C525	1-123-381-00	ELECT	2.2MF	20%	50V
C543	1-123-333-00	ELECT	100MF	20%	16V
C544	1-123-333-00	ELECT	100MF	20%	16V
C602	1-161-051-00	CERAMIC	0.01MF	30%	25V
C606	1-130-188-00	FILM	0.01MF	5%	100V
C611	1-102-905-00	CERAMIC	130PF	5%	50V
C613	1-102-905-00	CERAMIC	130PF	5%	50V
C622	1-123-228-00	ELECT	1MF	20%	50V
C623	1-123-228-00	ELECT	1MF	20%	50V
C701	1-123-231-00	ELECT	3.3MF	20%	50V
C703	1-123-231-00	ELECT	3.3MF	20%	50V
C811	1-123-379-00	ELECT	0.47MF	20%	50V
C812	1-123-379-00	ELECT	0.47MF	20%	50V
C814	1-123-379-00	ELECT	0.47MF	20%	50V
C815	1-123-379-00	ELECT	0.47MF	20%	50V
C816	1-123-380-00	ELECT	1MF	20%	50V
C957	1-123-504-00	ELECT	100MF	20%	25V
C960	1-123-504-00	ELECT	100MF	20%	25V
C966	1-123-479-00	ELECT	2200MF	20%	10V
C981 ⚠	1-130-098-00	(Canadian)...	FILM	0.022MF	20% 125V
C981 ⚠	1-130-233-00	(US).....	FILM	0.033MF	20% 125V
C981 ⚠	1-130-456-00	(AEP,E).....	FILM	0.022MF	20% 250V
C991	1-123-292-00	ELECT	4700MF		25V
C992	1-123-292-00	ELECT	4700MF		25V
CNJ101	1-507-726-00	JACK, PIN 2P			
CNJ102	1-507-726-00	JACK, PIN 2P			
CNJ103	1-507-726-00	JACK, PIN 2P			
CNJ201	1-507-726-00	JACK, PIN 2P			
CNJ202	1-507-726-00	JACK, PIN 2P			

ELECTRICAL PARTS

Ref.No.	Part No.	Description
CNJ203	1-507-726-00	JACK, PIN 2P
CNJ501	1-507-649-00	JACK
♠CNJ601	1-560-061-00	PIN, CONNECTOR 3P
♠CNJ602	1-560-066-00	PIN, CONNECTOR 10P
♠CNJ701	1-560-061-00	PIN, CONNECTOR 3P
♠CNJ702	1-560-066-00	PIN, CONNECTOR 10P
♠CNP801	1-560-061-00	PIN, CONNECTOR 3P
♠CNP802	1-560-338-00	PIN, CONNECTOR 7P
♠CNP803	1-560-061-00	PIN, CONNECTOR 3P
♠CNP804	1-560-060-00	PIN, CONNECTOR 2P
♠CNP805	1-560-060-00	PIN, CONNECTOR 2P
♠CNP806	1-560-060-00	PIN, CONNECTOR 2P
♠CNP807	1-560-064-00	PIN, CONNECTOR 6P
♠CNP808	1-560-062-00	PIN, CONNECTOR 4P
♠CNP809	1-560-062-00	PIN, CONNECTOR 4P
♠CNP810	1-560-065-00	PIN, CONNECTOR 8P
♠CNP811	1-560-063-00	PIN, CONNECTOR 5P
♠CNP812	1-560-064-00	PIN, CONNECTOR 6P
♠CNP951	1-560-061-00	PIN, CONNECTOR 3P
♠CNP952	1-560-060-00	PIN, CONNECTOR 2P
♠CNP991	1-560-060-00	PIN, CONNECTOR 2P
♠CNP992	1-560-061-00	PIN, CONNECTOR 3P
CP951⚠	1-130-456-00	(AEP,E)...FILM 0.022MF 20% 250V
CP951⚠	1-231-326-11	(US).....ENCAPSULATED COMPONENT
CP951⚠	1-231-341-00	(Canadian)....SPARK KILLER
D001	8-719-815-55	DIODE 1S1555
D002	8-719-815-55	DIODE 1S1555
D004	8-719-910-29	DIODE HZ12C3L
D102	8-719-910-64	DIODE HZ6B1L
D103	8-719-920-30	DIODE MV-203V
D104	8-719-815-55	DIODE 1S1555
D105	8-719-815-55	DIODE 1S1555
D202	8-719-910-64	DIODE HZ6B1L
D203	8-719-920-30	DIODE MV-203V
D204	8-719-815-55	DIODE 1S1555
D205	8-719-815-55	DIODE 1S1555
D301	8-719-815-55	DIODE 1S1555
D302	8-719-815-55	DIODE 1S1555
D303	8-719-815-55	DIODE 1S1555
D304	8-719-815-55	DIODE 1S1555
D305	8-719-815-55	DIODE 1S1555
D306	8-719-815-55	DIODE 1S1555
D307	8-719-815-55	DIODE 1S1555
D308	8-719-815-55	DIODE 1S1555
D401	8-719-815-55	DIODE 1S1555
D402	8-719-815-55	DIODE 1S1555
D403	8-719-815-55	DIODE 1S1555
D404	8-719-815-55	DIODE 1S1555
D405	8-719-815-55	DIODE 1S1555
D406	8-719-815-55	DIODE 1S1555

NOTE:
- Items with no part number and no description are not stocked because they are seldom required for routine service.
- Items marked " ♠ " are not stocked since they are seldom required for routine service. Some delay should be anticipated when ordering these items.
- Due to standardization, parts with part numbers (Δ-ΔΔΔ-ΔΔΔ-XX or Δ-ΔΔΔΔ-ΔΔΔ-X) may be different from those used in the set.

CAPACITORS:
- All capacitors are in μF. Common capacitors are omitted. Refer to the following lists for their part numbers. MF:μF, PF:μμF.

RESISTORS
- All resistors are in ohms. Common 1/4W, 1/8W and 1/16W carbon resistors are omitted. Refer to the following lists for their part numbers.
- F : nonflammable

COILS
- MMH : mH, UH : μH

The components identified by shading and mark ⚠ are critical for safety. Replace only with part number specified.

Les composants identifiés par une trame et une marque ⚠ sont critiques pour la sécurité. Ne les remplacer que par une pièce portant le numéro spécifié.

ELECTRICAL PARTS

Ref.No.	Part No.	Description
D407	8-719-815-55	DIODE 1S1555
D408	8-719-815-55	DIODE 1S1555
D501	8-719-910-64	DIODE HZ6B1L
D502	8-719-910-64	DIODE HZ6B1L
D503	8-719-815-55	DIODE 1S1555
D504	8-719-815-55	DIODE 1S1555
D506	8-719-815-55	DIODE 1S1555
D508	8-719-910-02	DIODE HZ20-2L
D509	8-719-910-02	DIODE HZ20-2L
D510	8-719-815-55	DIODE 1S1555
D511	8-719-815-55	DIODE 1S1555
D512	8-719-815-55	DIODE 1S1555
D513	8-719-815-55	DIODE 1S1555
D514	8-719-815-55	DIODE 1S1555
D515	8-719-815-55	DIODE 1S1555
D516	8-719-815-55	DIODE 1S1555
D517	8-719-815-55	DIODE 1S1555
D518	8-719-815-55	DIODE 1S1555
D519	8-719-815-55	DIODE 1S1555
D520	8-719-815-55	DIODE 1S1555
D521	8-719-815-55	DIODE 1S1555
D522	8-719-815-55	DIODE 1S1555
D523	8-719-815-55	DIODE 1S1555
D524	8-719-815-55	DIODE 1S1555
D525	8-719-815-55	DIODE 1S1555
D526	8-719-815-55	DIODE 1S1555
D527	8-719-910-64	DIODE HZ6B1L
D528	8-719-815-55	DIODE 1S1555
D529	8-719-815-55	DIODE 1S1555
D530	8-719-815-55	DIODE 1S1555
D531	8-719-910-02	DIODE HZ20-2L
D532	8-719-910-02	DIODE HZ20-2L
D533	8-719-910-02	DIODE HZ20-2L
D534	8-719-910-02	DIODE HZ20-2L
D601	8-719-815-55	DIODE 1S1555
D602	8-719-815-55	DIODE 1S1555
D701	8-719-815-55	DIODE 1S1555
D702	8-719-815-55	DIODE 1S1555
D703	8-719-815-55	DIODE 1S1555
D704	8-719-815-55	DIODE 1S1555
D705	8-719-815-55	DIODE 1S1555
D706	8-719-815-55	DIODE 1S1555
D707	8-719-910-64	DIODE HZ6B1L
D751	8-719-910-64	DIODE HZ6B1L
D801	8-719-815-55	DIODE 1S1555
D802	8-719-910-25	DIODE HZ12B1L
D803	8-719-815-55	DIODE 1S1555
D804	8-719-910-25	DIODE HZ12B1L
D805	8-719-200-02	DIODE 10E-2
D806	8-719-200-02	DIODE 10E-2

ELECTRICAL PARTS

Ref.No.	Part No.	Description
D807	8-719-200-02	DIODE 10E-2
D808	8-719-815-55	DIODE 1S1555
D809	8-719-815-55	DIODE 1S1555
D810	8-719-815-55	DIODE 1S1555
D811	8-719-815-55	DIODE 1S1555
D812	8-719-910-25	DIODE HZ12B1L
D813	8-719-910-25	DIODE HZ15-3L
D814	8-719-910-25	DIODE HZ12B1L
D815	8-719-910-25	DIODE HZ12B1L
D816	8-719-910-25	DIODE HZ12B1L
D817	8-719-200-02	DIODE 10E-2
D818	8-719-815-55	DIODE 1S1555
D819	8-719-815-55	DIODE 1S1555
D820	8-719-815-55	DIODE 1S1555
D851	8-719-955-35	DIODE PY5525S
D852	8-719-952-52	DIODE PG5525SX
D853	8-719-955-35	DIODE PY5525S
D854	8-719-952-53	DIODE BR5525S
D855	8-719-952-51	DIODE AA5525S
D951	8-719-200-02	DIODE 10E-2
D952	8-719-200-02	DIODE 10E-2
D953	8-719-200-02	DIODE 10E-2
D954	8-719-200-02	DIODE 10E-2
D955	8-719-200-02	DIODE 10E-2
D956	8-719-200-02	DIODE 10E-2
D957	8-719-200-02	DIODE 10E-2
D958	8-719-200-02	DIODE 10E-2
D959	8-719-200-02	DIODE 10E-2
D960	8-719-910-29	DIODE HZ12C3L
D961	8-719-922-71	DIODE HZ27-1L
D962	8-719-910-03	DIODE HZ20-3L
D963	8-719-920-64	DIODE HZ6B1L
D964	8-719-910-18	DIODE HZ11C2L
D991	8-719-230-02	DIODE 30DF2
D992	8-719-230-02	DIODE 30DF2
D993	8-719-230-02	DIODE 30DF2
D994	8-719-230-02	DIODE 30DF2
D995	8-719-931-06	DIODE EQB01-06
F1	⚠1-532-203-00	(AEP,E).....TIME-LAG FUSE (2A)
F1	⚠1-532-268-XX	(US,Canadian)...FUSE, GLASS TUBE (2A)
F2	⚠1-532-203-00	(AEP,E).....TIME-LAG FUSE (2A)
F2	⚠1-532-268-XX	(US,Canadian)...FUSE, GLASS TUBE (2A)
F3	⚠1-532-203-00	(AEP,E).....TIME-LAG FUSE (2A)
F3	⚠1-532-268-XX	(US,Canadian)...FUSE, GLASS TUBE (2A)
F4	⚠1-532-203-00	(AEP,E).....TIME-LAG FUSE (2A)
F4	⚠1-532-268-XX	(US,Canadian)...FUSE, GLASS TUBE (2A)
F5	⚠1-532-295-00	(AEP,E).....QUICK-ACTING FUSE (0.5A)
F5	⚠1-532-262-XX	(US,Canadian)..FUSE, GLASS TUBE (0.5A)

NOTE:
- Items with no part number and no description are not stocked because they are seldom required for routine service.
- Items marked " ♠ " are not stocked since they are seldom required for routine service. Some delay should be anticipated when ordering these items.
- Due to standardization, parts with part numbers (Δ-ΔΔΔ-ΔΔΔ-XX or Δ-ΔΔΔΔ-ΔΔΔ-X) may be different from those used in the set.

CAPACITORS:
- All capacitors are in μF. Common capacitors are omitted. Refer to the following lists for their part numbers. MF:μF, PF:μμF.

RESISTORS
- All resistors are in ohms. Common 1/4W, 1/8W and 1/16W carbon resistors are omitted. Refer to the following lists for their part numbers.
- F : nonflammable

COILS
- MMH : mH, UH : μH

The components identified by shading and mark ⚠ are critical for safety. Replace only with part number specified.

Les composants identifiés par une trame et une marque ⚠ sont critiques pour la sécurité. Ne les remplacer que par une pièce portant le numéro spécifié.

ELECTRICAL PARTS

Ref.No.	Part No.	Description
IC001	8-759-993-57	IC MSL9357RS
IC002	8-759-993-58	IC MSL9358RS
IC003	8-759-150-47	IC UPD550C047
IC101	8-759-101-74	IC CX-174
IC102	8-759-745-60	IC NJM4560D
IC103	8-759-101-74	IC CX-174
IC104	8-759-745-60	IC NJM4560D
IC201	8-759-101-74	IC CX-174
IC202	8-759-745-60	IC NJM4560D
IC203	8-759-101-74	IC CX-174
IC204	8-759-745-60	IC NJM4560D
IC301	8-759-145-58	IC UPC4558C
IC401	8-759-145-58	IC UPC4558C
IC501	8-759-745-60	IC NJM4560D
IC502	8-759-145-58	IC UPC4558C
IC503	8-759-145-58	IC UPC4558C
IC504	8-759-145-58	IC UPC4558C
IC601	8-759-145-58	IC UPC4558C
IC602	8-759-108-05	IC UPC78L05A
IC603	8-751-930-00	IC CX-193
IC604	8-759-145-58	IC UPC4558C
IC605	8-759-145-58	IC UPC4558C
IC701	8-759-145-58	IC UPC4558C
IC702	8-759-145-58	IC UPC4558C
IC703	8-759-145-58	IC UPC4558C
IC801	8-759-170-93	IC UPD547C093
IC802	8-759-145-58	IC UPC4558C
IC803	8-759-145-58	IC UPC4558C
IC804	8-759-984-69	IC MB84069B
IC805	8-759-133-90	IC UPC339C
IC806	8-759-145-58	IC UPC4558C
L001	1-408-096-00	MICRO INDUCTOR 470UH
L101	1-407-240-00	MICRO INDUCTOR 22MMH
L102	1-408-262-00	MICRO INDUCTOR 27MMH
L103	1-407-240-00	MICRO INDUCTOR 22MMH
L104	1-408-259-00	MICRO INDUCTOR 15MMH
L105	1-408-253-00	MICRO INDUCTOR 4.7MMH
L106	1-408-250-00	MICRO INDUCTOR 2.7MMH
L107	1-408-249-00	MICRO INDUCTOR 2.2MMH
L108	1-408-249-00	MICRO INDUCTOR 2.2MMH
L201	1-407-240-00	MICRO INDUCTOR 22MMH
L202	1-408-262-00	MICRO INDUCTOR 27MMH
L203	1-407-240-00	MICRO INDUCTOR 22MMH
L204	1-408-259-00	MICRO INDUCTOR 15MMH
L205	1-408-253-00	MICRO INDUCTOR 4.7MMH
L206	1-408-250-00	MICRO INDUCTOR 2.7MMH
L207	1-408-249-00	MICRO INDUCTOR 2.2MMH
L208	1-408-249-00	MICRO INDUCTOR 2.2MMH
L801	1-408-096-00	MICRO INDUCTOR 470UH
L951	1-421-302-XX	COIL(LINE FILTER)

ELECTRICAL PARTS

Ref.No.	Part No.	Description
OSC501	1-464-148-00	UNIT, BIAS OSCILLATOR
PL501	1-518-386-00	LAMP, PILOT
PL502	1-518-386-00	LAMP, PILOT
Q001	8-729-101-31	TRANSISTOR N13T1
Q002	8-729-463-73	TRANSISTOR 2SD637-Q
Q003	8-729-463-73	TRANSISTOR 2SD637-Q
Q004	8-729-464-22	TRANSISTOR 2SB642-P
Q005	8-729-463-73	TRANSISTOR 2SD637-Q
Q006	8-729-464-22	TRANSISTOR 2SB642-P
Q007	8-729-463-73	TRANSISTOR 2SD637-Q
Q101	8-765-660-10	TRANSISTOR 2SK245-1
Q102	8-765-450-20	TRANSISTOR 2SK125-2
Q103	8-765-450-20	TRANSISTOR 2SK125-2
Q104	8-729-366-62	TRANSISTOR 2SD666-C
Q105	8-729-113-82	TRANSISTOR 2SA1138-F
Q106	8-729-113-82	TRANSISTOR 2SA1138-F
Q107	8-729-167-62	TRANSISTOR 2SC2676-F
Q108	8-729-167-62	TRANSISTOR 2SC2676-F
Q109	8-729-366-62	TRANSISTOR 2SD666-C
Q110	8-729-364-62	TRANSISTOR 2SB646-C
Q201	8-765-660-10	TRANSISTOR 2SK245-1
Q202	8-765-450-20	TRANSISTOR 2SK125-2
Q203	8-765-450-20	TRANSISTOR 2SK125-2
Q204	8-729-366-62	TRANSISTOR 2SD666-C
Q205	8-729-113-82	TRANSISTOR 2SA1138-F
Q206	8-729-113-82	TRANSISTOR 2SA1138-F
Q207	8-729-167-62	TRANSISTOR 2SC2676-F
Q208	8-729-167-62	TRANSISTOR 2SC2676-F
Q209	8-729-366-62	TRANSISTOR 2SD666-C
Q210	8-729-364-62	TRANSISTOR 2SB646-C
Q301	8-729-663-47	TRANSISTOR 2SC1363-7
Q302	8-729-663-47	TRANSISTOR 2SC1363-7
Q401	8-729-663-47	TRANSISTOR 2SC1363-7
Q402	8-729-663-47	TRANSISTOR 2SC1363-7
Q501	8-727-312-00	TRANSISTOR 2SK42-2
Q502	8-729-167-62	TRANSISTOR 2SC2676-F
Q503	8-729-180-93	TRANSISTOR 2SD809-F
Q504	8-729-113-82	TRANSISTOR 2SA1138-F
Q505	8-729-167-62	TRANSISTOR 2SC2676-F
Q506	8-727-312-00	TRANSISTOR 2SK42-2
Q507	8-729-113-82	TRANSISTOR 2SA1138-F
Q508	8-729-173-13	TRANSISTOR 2SB731-F
Q509	8-729-167-62	TRANSISTOR 2SC2676-F
Q510	8-729-113-82	TRANSISTOR 2SA1138-F
Q511	8-729-663-47	TRANSISTOR 2SC1363-7
Q512	8-729-602-67	TRANSISTOR 2SA1026-7
Q513	8-729-281-53	TRANSISTOR 2SC1815-GR
Q514	8-729-281-53	TRANSISTOR 2SC1815-GR

NOTE:

- Items with no part number and no description are not stocked because they are seldom required for routine service.
- Items marked " ♠ " are not stocked since they are seldom required for routine service. Some delay should be anticipated when ordering these items.
- Due to standardization, parts with part numbers (Δ-ΔΔΔ-ΔΔΔ-XX or Δ-ΔΔΔΔ-ΔΔΔ-X) may be different from those used in the set.

CAPACITORS:

- All capacitors are in μF. Common capacitors are omitted. Refer to the following lists for their part numbers. MF:μF, PF:μμF.

RESISTORS

- All resistors are in ohms. Common 1/4W, 1/8W and 1/16W carbon resistors are omitted. Refer to the following lists for their part numbers.
- F : nonflammable

COILS

- MMH : mH, UH : μH

ELECTRICAL PARTS

Ref.No.	Part No.	Description
Q515	8-729-663-47	TRANSISTOR 2SC1363-7
Q516	8-729-663-47	TRANSISTOR 2SC1363-7
Q517	8-729-663-47	TRANSISTOR 2SC1363-7
Q518	8-729-663-47	TRANSISTOR 2SC1363-7
Q519	8-729-663-47	TRANSISTOR 2SC1363-7
Q520	8-729-663-47	TRANSISTOR 2SC1363-7
Q521	8-729-663-47	TRANSISTOR 2SC1363-7
Q522	8-729-602-67	TRANSISTOR 2SA1026-7
Q523	8-729-663-47	TRANSISTOR 2SC1363-7
Q524	8-729-602-67	TRANSISTOR 2SA1026-7
Q525	8-729-663-47	TRANSISTOR 2SC1363-7
Q526	8-729-602-67	TRANSISTOR 2SA1026-7
Q527	8-729-663-47	TRANSISTOR 2SC1363-7
Q528	8-729-663-47	TRANSISTOR 2SC1363-7
Q601	8-729-663-47	TRANSISTOR 2SC1364-8
Q602	8-729-663-47	TRANSISTOR 2SC1364-8
Q603	8-729-180-93	TRANSISTOR 2SD809-K
Q604	8-729-173-13	TRANSISTOR 2SB731-K
Q605	8-729-180-93	TRANSISTOR 2SD809-K
Q606	8-729-173-13	TRANSISTOR 2SB731-K
Q701	8-729-663-47	TRANSISTOR 2SC1364-8
Q702	8-729-602-68	TRANSISTOR 2SA1026-8
Q703	8-729-663-47	TRANSISTOR 2SC1364-8
Q704	8-729-663-47	TRANSISTOR 2SC1364-8
Q705	8-729-663-47	TRANSISTOR 2SC1364-8
Q706	8-729-663-47	TRANSISTOR 2SC1364-8
Q707	8-729-180-93	TRANSISTOR 2SD809-K
Q708	8-729-173-13	TRANSISTOR 2SB731-K
Q709	8-729-180-93	TRANSISTOR 2SD809-K
Q710	8-729-173-13	TRANSISTOR 2SB731-K
Q751	8-729-180-93	TRANSISTOR 2SD809-K
Q752	8-729-663-47	TRANSISTOR 2SC1364-8
Q753	8-729-173-13	TRANSISTOR 2SB731-K
Q754	8-729-602-68	TRANSISTOR 2SA1026-8
Q801	8-729-663-47	TRANSISTOR 2SC1364-7
Q802	8-729-663-47	TRANSISTOR 2SC1364-7
Q803	8-729-663-47	TRANSISTOR 2SC1364-7
Q804	8-729-663-47	TRANSISTOR 2SC1364-7
Q805	8-729-663-47	TRANSISTOR 2SC1364-7
Q806	8-729-663-47	TRANSISTOR 2SC1364-7
Q807	8-729-663-47	TRANSISTOR 2SC1364-7
Q808	8-729-378-93	TRANSISTOR 2SD789-E
Q809	8-729-378-93	TRANSISTOR 2SD789-E
Q810	8-729-378-93	TRANSISTOR 2SD789-E
Q811	8-729-283-42	TRANSISTOR 2SB834-Y
Q812	8-729-663-47	TRANSISTOR 2SC1364-7
Q813	8-729-663-47	TRANSISTOR 2SC1364-7
Q814	8-729-663-47	TRANSISTOR 2SC1364-7
Q815	8-729-663-47	TRANSISTOR 2SC1364-7
Q816	8-729-663-47	TRANSISTOR 2SC1364-7

ELECTRICAL PARTS

Ref.No.	Part No.	Description			
Q817	8-729-663-47	TRANSISTOR 2SC1364-7			
Q951	8-729-288-02	TRANSISTOR 2SD880-Y			
Q952	8-729-663-47	TRANSISTOR 2SC1364-7			
Q953	8-729-663-47	TRANSISTOR 2SC1364-7			
Q954	8-729-288-02	TRANSISTOR 2SD880-Y			
Q955	8-729-663-47	TRANSISTOR 2SC1364-7			
Q956	8-729-378-93	TRANSISTOR 2SD789-E			
Q957	8-729-288-02	TRANSISTOR 2SD880-Y			
Q958	8-729-663-47	TRANSISTOR 2SC1364-7			
Q959	8-729-663-47	TRANSISTOR 2SC1364-7			
Q960	8-729-288-02	TRANSISTOR 2SD880-Y			
Q961	8-729-663-47	TRANSISTOR 2SC1364-7			
R026	1-244-853-00	CARBON	150	5%	1/2W
R106	1-214-842-00	METAL	120	1%	1/2W
R107	1-214-879-00	METAL	4.3K	1%	1/2W
R108	1-214-884-00	METAL	6.8K	1%	1/2W
R109	1-214-913-00	METAL	100K	1%	1/2W
R129	1-214-932-00	METAL	620K	1%	1/2W
R133	1-214-901-00	METAL	33K	1%	1/2W
R134	1-214-894-00	METAL	18K	1%	1/2W
R141	1-214-884-00	METAL	6.8K	1%	1/2W
R151	1-214-932-00	METAL	620K	1%	1/2W
R167	1-214-872-00	METAL	2.2K	1%	1/2W
R185	1-214-872-00	METAL	2.2K	1%	1/2W
R186	1-214-872-00	METAL	2.2K	1%	1/2W
R206	1-214-842-00	METAL	120	1%	1/2W
R207	1-214-879-00	METAL	4.3K	1%	1/2W
R208	1-214-884-00	METAL	6.8K	1%	1/2W
R209	1-214-913-00	METAL	100K	1%	1/2W
R229	1-214-932-00	METAL	620K	1%	1/2W
R233	1-214-901-00	METAL	33K	1%	1/2W
R234	1-214-894-00	METAL	18K	1%	1/2W
R241	1-214-884-00	METAL	6.8K	1%	1/2W
R251	1-214-932-00	METAL	620K	1%	1/2W
R267	1-214-872-00	METAL	2.2K	1%	1/2W
R285	1-214-872-00	METAL	2.2K	1%	1/2W
R286	1-214-872-00	METAL	2.2K	1%	1/2W
R504	1-214-856-00	METAL	470	1%	1/2W
R505	1-214-862-00	METAL	820	1%	1/2W
R509	1-214-856-00	METAL	470	1%	1/2W
R510	1-214-862-00	METAL	820	1%	1/2W
R957	⚠1-213-076-00	FUSIBLE	47	5%	1W F
R966	⚠1-206-467-00	METAL	15	5%	2W F
R967	⚠1-217-395-00	FUSIBLE	47	5%	1/4W F
RV101	1-224-247-XX	RES, ADJ, METAL GLAZE 100			
RV102	1-224-252-XX	RES, ADJ, METAL GLAZE 10K			
RV103	1-228-127-00	RES, VAR, CARBON 20K			
RV104	1-224-251-XX	RES, ADJ, METAL GLAZE 4.7K			
RV105	1-228-128-00	RES, VAR, CARBON 5K			

NOTE:
- Items with no part number and no description are not stocked because they are seldom required for routine service.
- Items marked " ♠ " are not stocked since they are seldom required for routine service. Some delay should be anticipated when ordering these items.
- Due to standardization, parts with part numbers (Δ-ΔΔΔ-ΔΔΔ-XX or Δ-ΔΔΔΔ-ΔΔΔ-X) may be different from those used in the set.

CAPACITORS:
- All capacitors are in μF. Common capacitors are omitted. Refer to the following lists for their part numbers. MF:μF, PF:μμF.

RESISTORS
- All resistors are in ohms. Common 1/4W, 1/8W and 1/16W carbon resistors are omitted. Refer to the following lists for their part numbers.
- F : nonflammable

COILS
- MMH : mH, UH : μH

The components identified by shading and mark ⚠ are critical for safety. Replace only with part number specified.

Les composants identifiés par une trame et une marque ⚠ sont critiques pour la sécurité. Ne les remplacer que par une pièce portant le numéro spécifié.

ELECTRICAL PARTS

Ref.No.	Part No.	Description
RV106	1-224-251-XX	RES, ADJ, SOLID 4.7K
RV107	1-224-251-XX	RES, ADJ, SOLID 4.7K
RV108	1-224-251-XX	RES, ADJ, SOLID 4.7K
RV201	1-224-247-XX	RES, ADJ, METAL GLAZE 100
RV202	1-224-252-XX	RES, ADJ, METAL GLAZE 10K
RV203	1-228-127-00	RES, VAR, CARBON 20K
RV204	1-224-251-XX	RES, ADJ, METAL GLAZE 4.7K
RV205	1-228-128-00	RES, VAR, CARBON 5K
RV206	1-224-251-XX	RES, ADJ, SOLID 4.7K
RV207	1-224-251-XX	RES, ADJ, SOLID 4.7K
RV208	1-224-251-XX	RES, ADJ, SOLID 4.7K
RV501	1-224-248-XX	RES, ADJ, SOLID 470
RV502	1-224-248-XX	RES, ADJ, SOLID 470
RV503	1-228-128-00	RES, VAR, CARBON 5K
RV504	1-224-250-XX	RES, ADJ, SOLID 2.2K
RV505	1-224-250-XX	RES, ADJ, SOLID 2.2K
RV601	1-224-254-XX	RES, ADJ, METAL GLAZE 47K
RV602	1-226-234-00	RES, ADJ, CARBON 2K
RV603	1-226-239-00	RES, ADJ, CARBON 100K
RV604	1-226-234-00	RES, ADJ, CARBON 2K
RV605	1-226-239-00	RES, ADJ, CARBON 100K
RV701	1-226-236-00	RES, ADJ, CARBON 10K
RV702	1-224-252-XX	RES, ADJ, SOLID 10K
RV703	1-226-236-00	RES, ADJ, CARBON 10K
RV801	1-226-241-00	RES, ADJ, CARBON 500K
RV802	1-226-241-00	RES, ADJ, CARBON 500K
RY501	1-515-323-21	RELAY
RY502	1-515-323-21	RELAY
RY503	1-515-323-21	RELAY
S001	1-552-539-00	SWITCH, KEY BOARD
S002	1-552-539-00	SWITCH, KEY BOARD
S003	1-552-539-00	SWITCH, KEY BOARD
S004	1-552-539-00	SWITCH, KEY BOARD
S501	1-553-638-00	SWITCH, SLIDE
S502	1-553-648-00	SWITCH, PUSH
S503	1-553-647-00	SWITCH, LEVER SLIDE
S504	1-553-254-00	SWITCH, ROTARY
S505	1-552-964-00	SWITCH, ROTARY
S601	1-553-325-00	SWITCH
S851	1-552-539-00	SWITCH, KEY BOARD
S852	1-552-539-00	SWITCH, KEY BOARD
S853	1-552-539-00	SWITCH, KEY BOARD
S854	1-552-539-00	SWITCH, KEY BOARD
S855	1-552-539-00	SWITCH, KEY BOARD
S856	1-552-539-00	SWITCH, KEY BOARD
S857	1-552-539-00	SWITCH, KEY BOARD
S951 ⚠	1-553-318-00	(AEP,E).....SWITCH, PUSH (AC POWER)
S951 ⚠	1-553-319-00	(US,Canadian)...SWITCH, PUSH (AC POWER)
S951 ⚠	1-553-746-00	(US,Canadian)...SWITCH, SEESAW (AC POWER)
S951 ⚠	1-553-747-00	(AEP,E).....SWITCH, SEESAW (AC POWER)

ELECTRICAL PARTS

Ref.No.	Part No.	Description
TH101	1-800-200-00	THERMISTOR S-3K
TH201	1-800-200-00	THERMISTOR S-3K
TP1 ♠	1-560-060-00	PIN, CONNECTOR 2P
TP2 ♠	1-560-060-00	PIN, CONNECTOR 2P
TP3 ♠	1-560-060-00	PIN, CONNECTOR 2P
TP601 ♠	1-560-060-00	PIN, CONNECTOR 2P
TP602 ♠	1-560-060-00	PIN, CONNECTOR 2P
TP701 ♠	1-560-060-00	PIN, CONNECTOR 2P
X601	1-527-815-00	OSCILLATOR, CRYSTAL

NOTE:
- Items with no part number and no description are not stocked because they are seldom required for routine service.
- Items marked " ♠ " are not stocked since they are seldom required for routine service. Some delay should be anticipated when ordering these items.
- Due to standardization, parts with part numbers (Δ-ΔΔΔ-ΔΔΔ-XX or Δ-ΔΔΔΔ-ΔΔΔ-X) may be different from those used in the set.

CAPACITORS:
- All capacitors are in μF. Common capacitors are omitted. Refer to the following lists for their part numbers. MF:μF, PF:μμF.

RESISTORS
- All resistors are in ohms. Common 1/4W, 1/8W and 1/16W carbon resistors are omitted. Refer to the following lists for their part numbers.
- F : nonflammable

COILS
- MMH : mH, UH : μH

The components identified by shading and mark ⚠ are critical for safety. Replace only with part number specified.

Les composants identifiés par une trame et une marque ⚠ sont critiques pour la sécurité. Ne les remplacer que par une pièce portant le numéro spécifié.

ELECTROLYTIC CAPACITORS

CAP. (μF)	RATING → : Use the high voltage rated one.					
	6.3 VOLT.	10 VOLT.	16 VOLT.	25 VOLT.	35 VOLT.	50 VOLT.
	PART No.	PART No.	PART No.	PART No.	PART No.	PART No.
0.47					→	1-121-726-00
1.0					→	1-121-391-00
2.2					→	1-121-450-00
3.3	→	→	→	1-121-392-00	→	1-121-393-00
4.7	→	→	→	1-121-395-00	→	1-121-396-00
10	→	→	1-121-651-00	1-121-398-00	→	1-121-738-00
22	→	→	1-121-479-00	1-121-480-00	1-121-662-00	1-121-152-00
33	→	→	1-121-403-00	1-121-404-00	1-121-652-00	1-121-405-00
47	→	1-121-352-00	1-121-409-00	1-121-410-00	1-121-653-00	1-121-411-00
100	→	1-121-414-00	1-121-415-00	1-121-416-00	1-121-357-00	1-121-417-00
220	1-121-419-00	1-121-420-00	1-121-421-00	1-121-422-00	1-121-261-00	1-121-423-00
330	1-121-751-00	1-121-805-00	1-121-521-00	1-121-654-00	1-121-655-00	1-121-656-00
470	1-121-424-00	1-121-425-00	1-121-426-00	1-121-733-00	1-121-361-00	1-121-810-00
1000	–	1-121-736-00	1-121-245-00	1-121-657-00	1-121-388-00	1-123-061-00
2200	1-121-658-00	1-121-659-00	1-121-660-00	1-123-067-00	1-121-984-00	–
3300	1-121-661-00	1-123-075-00	1-123-071-00	–	–	–

CAP. (μF)	100 VOLT.	160 VOLT.	250 VOLT.	350 VOLT.
	PART No.	PART No.	PART No.	PART No.
0.47	–	–	–	–
1.0	1-123-249-00	1-123-252-00	1-123-003-00	1-121-168-00
2.2	1-123-250-00	1-123-026-00	–	1-123-028-00
3.3	1-121-995-00	–	1-123-004-00	1-123-006-00
4.7	1-123-255-00	1-121-246-00	1-121-759-00	1-123-007-00
10	1-121-126-00	1-121-999-00	1-123-254-00	1-123-008-00
22	1-121-996-00	1-123-253-00	1-123-005-00	1-123-022-00
33	1-121-997-00	1-121-757-00	–	–
47	1-123-251-00	1-121-919-00	–	–
100	1-123-084-00	–	–	–

CERAMIC CAPACITORS

RATING							
CAP. (pF)	50 VOLT.	CAP. (pF)	50 VOLT.	CAP. (pF)	50 VOLT.	CAP. (μF)	50 VOLT.
	PART No.		PART No.		PART No.		PART No.
0.5	1-101-837-00	22	1-102-959-00	150	1-101-361-00	0.001	1-102-074-00
0.75	1-101-586-00	24	1-102-960-00	160	1-101-367-00	0.0012	1-102-118-00
1.0	1-102-934-00	27	1-102-961-00	180	1-102-976-00	0.0015	1-102-119-00
1.5	1-101-576-00	30	1-102-962-00	200	1-102-977-00	0.0018	1-102-120-00
2.0	1-102-935-00	33	1-102-963-00	220	1-102-978-00	0.0022	1-102-121-00
3	1-102-936-00	36	1-102-964-00	240	1-102-979-00	0.0027	1-102-122-00
4	1-102-937-00	39	1-102-965-00	270	1-102-980-00	0.0033	1-102-123-00
5	1-102-942-00	43	1-102-966-00	300	1-102-981-00	0.0039	1-102-124-00
6	1-102-943-00	47	1-101-880-00	330	1-102-820-00	0.0047	1-102-125-00
7	1-102-944-00	51	1-101-882-00	360	1-102-821-00	0.0056	1-102-126-00
8	1-102-945-00	56	1-101-884-00	390	1-102-822-00	0.0068	1-102-127-00
9	1-102-946-00	62	1-101-886-00	430	1-102-823-00	0.0082	1-102-128-00
10	1-102-947-00	68	1-101-888-00	470	1-102-824-00	0.01	1-102-129-00
11	1-102-948-00	75	1-101-890-00	510	1-101-059-00	0.022	1-101-005-00
12	1-102-949-00	82	1-102-971-00	560	1-102-115-00	0.047	1-101-006-00
13	1-102-950-00	91	1-102-972-00	680	1-102-116-00		
15	1-102-951-00	100	1-102-973-00	820	1-102-117-00		
16	1-102-952-00	110	1-102-815-00				
18	1-102-953-00	120	1-102-816-00				
20	1-102-958-00	130	1-101-081-00				

0.001μF = 1,000pF

CERAMIC (SEMICONDUCTOR) CAPACITORS

CAP. (μF)	RATING → : Use the high voltage rated one.				
	25 VOLT.	50 VOLT.	CAP. (μF)	25 VOLT.	50 VOLT.
	PART No.	PART No.		PART No.	PART No.
0.001	→	1-161-039-00	0.018	1-161-016-00	1-161-054-00
0.0012	→	1-161-040-00	0.022	1-161-017-00	1-161-055-00
0.0015		1-161-041-00	0.027	1-161-018-00	1-161-056-00
0.0018		1-161-042-00	0.033	1-161-019-00	1-161-057-00
0.0022		1-161-043-00	0.039	1-161-010-00	1-161-058-00
0.0027	→	1-161-044-00	0.047	1-161-021-00	1-161-059-00
0.0033	→	1-161-045-00	0.056	→	1-161-060-00
0.0039	→	1-161-046-00	0.068	→	1-161-061-00
0.0047	→	1-161-047-00	0.082	1-161-024-00	1-161-062-00
0.0056	→	1-161-048-00	0.1	1-161-025-00	1-161-063-00
0.0068	→	1-161-049-00			
0.0082	1-161-012-00	1-161-050-00			
0.01	1-161-013-00	1-161-051-00			
0.012	→	1-161-052-00			
0.015	1-161-015-00	1-161-053-00			

MYLAR CAPACITORS

CAP. (μF)	50 VOLT. PART No.	100 VOLT. PART No.	200 VOLT. PART No.	CAP. (μF)	50 VOLT. PART No.	100 VOLT. PART No.	200 VOLT. PART No.	CAP. (μF)	50 VOLT. PART No.	100 VOLT. PART No.	200 VOLT. PART No.
	RATING										
0.001	1-108-227-00	1-108-365-00	1-108-409-00	0.01	1-108-239-00	1-108-377-00	1-108-421-00	0.1	1-108-251-00	1-108-389-00	1-108-433-00
0.0012	1-108-351-00	1-108-366-00	1-108-410-00	0.012	1-108-357-00	1-108-378-00	1-108-422-00	0.12	1-108-363-00	1-108-390-00	1-108-434-00
0.0015	1-108-228-00	1-108-367-00	1-108-411-00	0.015	1-108-240-00	1-108-379-00	1-108-423-00	0.15	1-108-252-00	1-108-391-00	1-108-435-00
0.0018	1-108-352-00	1-108-368-00	1-108-412-00	0.018	1-108-358-00	1-108-380-00	1-108-424-00	0.18	1-108-364-00	1-108-392-00	1-108-436-00
0.0022	1-108-230-00	1-108-369-00	1-108-413-00	0.022	1-108-242-00	1-108-381-00	1-108-425-00	0.22	1-108-254-00	1-108-393-00	1-108-437-00
0.0027	1-108-353-00	1-108-370-00	1-108-414-00	0.027	1-108-359-00	1-108-382-00	1-108-426-00	0.27	1-108-854-00	–	–
0.0033	1-108-232-00	1-108-371-00	1-108-415-00	0.033	1-108-244-00	1-108-383-00	1-108-427-00	0.33	1-108-855-00	–	–
0.0039	1-108-354-00	1-108-372-00	1-108-416-00	0.039	1-108-360-00	1-108-384-00	1-108-428-00	0.39	1-108-856-00	–	–
0.0047	1-108-234-00	1-108-373-00	1-108-417-00	0.047	1-108-246-00	1-108-385-00	1-108-429-00	0.47	1-108-857-00	–	–
0.0056	1-108-355-00	1-108-374-00	1-108-418-00	0.056	1-108-361-00	1-108-386-00	1-108-430-00				
0.0068	1-108-237-00	1-108-375-00	1-108-419-00	0.068	1-108-249-00	1-108-387-00	1-108-431-00				
0.0082	1-108-356-00	1-108-376-00	1-108-420-00	0.082	1-108-362-00	1-108-388-00	1-108-432-00				

TANTALUM CAPACITORS

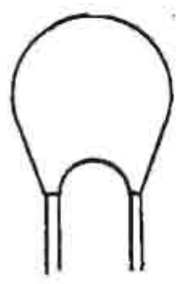

→ : Use the high voltage rated one.

CAP. (μF)	3.15 VOLT. PART No.	6.3 VOLT. PART No.	10 VOLT. PART No.	16 VOLT. PART No.	20 VOLT. PART No.	25 VOLT. PART No.	35 VOLT. PART No.
	RATING						
0.01					→	→	1-131-396-00
0.015						→	1-131-397-00
0.022						→	1-131-398-00
0.033						→	1-131-399-00
0.047						→	1-131-400-00
0.068					→	→	1-131-401-00
0.1					→	→	1-131-402-00
0.15					→	→	1-131-403-00
0.22					→	→	1-131-404-00
0.33					→	1-131-409-00	1-131-405-00
0.47	–	–	–	–	1-131-412-00	→	1-131-406-00
0.68	–	–	–	1-131-415-00	→	1-131-410-00	1-131-407-00
1.0	–	–	1-131-418-00	–	1-131-413-00	→	1-131-408-00
1.5	–	1-131-421-00	–	1-131-416-00	→	1-131-411-00	1-131-348-00
2.2	1-131-424-00	–	1-131-419-00	–	1-131-414-00	1-131-355-00	1-131-349-00
3.3	–	1-131-422-00	–	1-131-417-00	1-131-362-00	1-131-356-00	1-131-350-00
4.7	1-131-425-00	–	1-131-420-00	1-131-369-00	1-131-363-00	1-131-357-00	1-131-351-00
6.8	–	1-131-423-00	1-131-376-00	1-131-370-00	1-131-364-00	1-131-358-00	1-131-352-00
10	1-131-426-00	1-131-383-00	1-131-377-00	1-131-371-00	1-131-365-00	1-131-359-00	1-131-353-00
15	1-131-390-00	1-131-384-00	1-131-378-00	1-131-372-00	1-131-366-00	1-131-360-00	–
22	1-131-391-00	1-131-385-00	1-131-379-00	1-131-373-00	1-131-367-00		
33	1-131-392-00	1-131-386-00	1-131-380-00	1-131-374-00			
47	1-131-393-00	1-131-387-00	1-131-381-00	–			
68	1-131-394-00	1-131-388-00	–	–			
100	1-131-395-00	–	–	–			

TANTALUM CAPACITORS

CAP. (μF)	3 VOLT. PART No.	6.3 VOLT. PART No.	10 VOLT. PART No.	16 VOLT. PART No.	20 VOLT. PART No.	35 VOLT. PART No.
	RATING					
0.033						1-131-273-00
0.047						1-131-274-00
0.068						1-131-275-00
0.1						1-131-276-00
0.15						1-131-277-00
0.22			–	–	1-131-262-00	1-131-278-00
0.33			–	–	1-131-263-00	1-131-279-00
0.47			1-131-169-00	–	1-131-264-00	1-131-280-00
0.68			–	1-131-258-00	1-131-265-00	1-131-281-00
1.0			1-131-254-00	–	1-131-266-00	1-131-282-00
1.5		1-131-250-00	–	–	1-131-267-00	1-131-283-00
2.2		–	–	1-131-259-00	1-131-268-00	1-131-284-00
3.3		–	1-131-255-00	–	1-131-269-00	–
4.7		1-131-251-00	1-131-171-00	–	1-131-270-00	–
6.8		–	–	1-131-260-00	1-131-271-00	–
10	–	–	1-131-256-00	–	1-131-272-00	–
15	–	1-131-252-00	–	1-131-261-00		
22	–	–	1-131-257-00	–		
33	1-131-176-00	1-131-253-00	1-131-173-00	–		
47	1-131-288-00	1-131-174-00	–	–		
100	1-131-177-00					

1/4 WATT CARBON RESISTORS

Ω	Part No.	Ω	Part No.	Ω	Part No.	Ω	Part No.	Ω	Part No.	Ω	Part No.	Ω	Part No.
1.0	1-246-401-00	10	1-246-425-00	100	1-246-449-00	1.0k	1-246-473-00	10k	1-246-497-00	100k	1-246-521-00	1.0M	1-246-545-00
1.1	1-246-402-00	11	1-246-426-00	110	1-246-450-00	1.1k	1-246-474-00	11k	1-246-498-00	110k	1-246-522-00	1.1M	1-210-814-00
1.2	1-246-403-00	12	1-246-427-00	120	1-246-451-00	1.2k	1-246-475-00	12k	1-246-499-00	120k	1-246-523-00	1.2M	1-210-815-00
1.3	1-246-404-00	13	1-246-428-00	130	1-246-452-00	1.3k	1-246-476-00	13k	1-246-500-00	130k	1-246-524-00	1.3M	1-210-816-00
1.5	1-246-405-00	15	1-246-429-00	150	1-246-453-00	1.5k	1-246-477-00	15k	1-246-501-00	150k	1-246-525-00	1.5M	1-210-817-00
1.6	1-246-406-00	16	1-246-430-00	160	1-246-454-00	1.6k	1-246-478-00	16k	1-246-502-00	160k	1-246-526-00	1.6M	1-210-818-00
1.8	1-246-407-00	18	1-246-431-00	180	1-246-455-00	1.8k	1-246-479-00	18k	1-246-503-00	180k	1-246-527-00	1.8M	1-210-819-00
2.0	1-246-408-00	20	1-246-432-00	200	1-246-456-00	2.0k	1-246-480-00	20k	1-246-504-00	200k	1-246-528-00	2.0M	1-210-820-00
2.2	1-246-409-00	22	1-246-433-00	220	1-246-457-00	2.2k	1-246-481-00	22k	1-246-505-00	220k	1-246-529-00	2.2M	1-210-821-00
2.4	1-246-410-00	24	1-246-434-00	240	1-246-458-00	2.4k	1-246-482-00	24k	1-246-506-00	240k	1-246-530-00	2.4M	1-244-754-00
2.7	1-246-411-00	27	1-246-435-00	270	1-246-459-00	2.7k	1-246-483-00	27k	1-246-507-00	270k	1-246-531-00	2.7M	1-244-755-00
3.0	1-246-412-00	30	1-246-436-00	300	1-246-460-00	3.0k	1-246-484-00	30k	1-246-508-00	300k	1-246-532-00	3.0M	1-244-756-00
3.3	1-246-413-00	33	1-246-437-00	330	1-246-461-00	3.3k	1-246-485-00	33k	1-246-509-00	330k	1-246-533-00	3.3M	1-244-757-00
3.6	1-246-414-00	36	1-246-438-00	360	1-246-462-00	3.6k	1-246-486-00	36k	1-246-510-00	360k	1-246-534-00	3.6M	1-244-758-00
3.9	1-246-415-00	39	1-246-439-00	390	1-246-463-00	3.9k	1-246-487-00	39k	1-246-511-00	390k	1-246-535-00	3.9M	1-244-759-00
4.3	1-246-416-00	43	1-246-440-00	430	1-246-464-00	4.3k	1-246-488-00	43k	1-246-512-00	430k	1-246-536-00	4.3M	1-244-760-00
4.7	1-246-417-00	47	1-246-441-00	470	1-246-465-00	4.7k	1-246-489-00	47k	1-246-513-00	470k	1-246-537-00	4.7M	1-244-761-00
5.1	1-246-418-00	51	1-246-442-00	510	1-246-466-00	5.1k	1-246-490-00	51k	1-246-514-00	510k	1-246-538-00	5.1M	1-244-762-00
5.6	1-246-419-00	56	1-246-443-00	560	1-246-467-00	5.6k	1-246-491-00	56k	1-246-515-00	560k	1-246-539-00		
6.2	1-246-420-00	62	1-246-444-00	620	1-246-468-00	6.2k	1-246-492-00	62k	1-246-516-00	620k	1-246-540-00		
6.8	1-246-421-00	68	1-246-445-00	680	1-246-469-00	6.8k	1-246-493-00	68k	1-246-517-00	680k	1-246-541-00		
7.5	1-246-422-00	75	1-246-446-00	750	1-246-470-00	7.5k	1-246-494-00	75k	1-246-518-00	750k	1-246-542-00		
8.2	1-246-423-00	82	1-246-447-00	820	1-246-471-00	8.2k	1-246-495-00	82k	1-246-519-00	820k	1-246-543-00		
9.1	1-246-424-00	91	1-246-448-00	910	1-246-472-00	9.1k	1-246-496-00	91k	1-246-520-00	910k	1-246-544-00		

HARDWARE NOMENCLATURE

Screw:

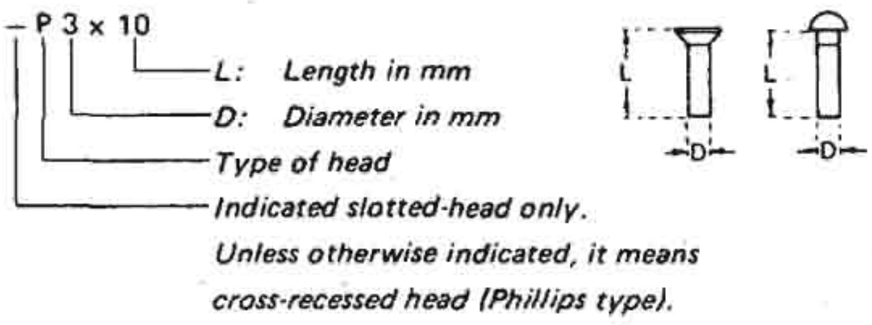

Nut, Washer, Retaining ring:

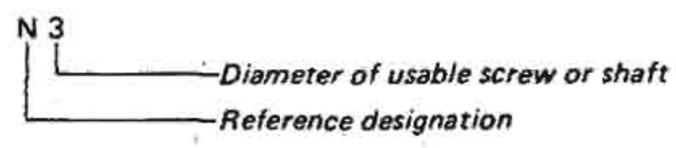

Reference Designation	Shape	Description	Remarks
		SCREWS	
P		pan-head screw	binding-head (B) screw for replacement
PWH		pan-head screw with washer face	binding-head (B) screw and flat washer for replacement
PS PSP		pan-head screw with spring washer	binding-head (B) screw and spring washer for replacement
PSW PSPW		pan-head screw with spring and flat washers	binding-head (B) screw and spring and flat washers for replacement
R		round-head screw	binding-head (B) screw for replacement
K		flat-countersunk-head screw	
RK		oval-countersunk-head screw	
B		binding-head screw	
T		truss-head screw	binding-head (B) screw for replacement
F		flat-fillister-head screw	
RF		fillister-head screw	
BV		braizer-head screw	

Reference Designation	Shape	Description	Remarks
		SELF-TAPPING SCREWS	
TA		self-tapping screw	ex: TA, P 3 x 10
PTP		pan-head self-tapping screw	binding-head self-tapping (TA, B) screw for replacement
PTPWH		pan-head self-tapping screw with washer face	binding-head self tapping (TA, B) screw and flat washer for replacement
PTTWH		pan-head thread-rolling screw with washer face	binding-head (B) screw and flat washer for replacement
		SET SCREWS	
SC		set screw	
SC		hexagon-socket set screw	ex: SC 2.6 x 4, hexagon socket
		NUT	
N		nut	
		WASHERS	
W		flat washer	
SW		spring washer	
LW		internal-tooth lock washer	ex: LW3, internal
LW		external-tooth lock washer	ex: LW3, external
		RETAINING RINGS	
E		retaining ring	
G		grip-type retaining ring	