TC-K501R/K501ES

SERVICE MANUAL

TC-K501R:

US Model
Canadian Model
AEP Model

TC-K501ES:

E Model

'Dolby' and the double-D symbol are the trade marks of Dolby Laboratories Licensing Corporation. Noise reduction system manufactured under license from Dolby Laboratories Licensing Corporation.

PHOTO : TC-K501ES

SPECIFICATIONS

Tape Transport Mechanism Type	TCM110R3

Recording system
4-track 2-channel stereo

Fast-forward and rewind time
Approx. 90 sec. (with C-60 cassette)

Bias frequency 105 kHz

Signal-to-noise ratio (NAB, at peak level)

Cassette \ Dolby NR switch	OFF	B-TYPE ON	C-TYPE ON
TYPE IV (Sony METAL-ES)	59 dB	66 dB	72 dB
TYPE II (Sony UCX)	58 dB	65 dB	71 dB
TYPE I (Sony HF-S)	54 dB	61 dB	67 dB

Total harmonic distortion
1.0% (with Sony METAL-ES cassette)

Frequency response
DOLBY NR OFF
- With TYPE IV cassette (Sony METAL-ES)
  20 - 19,000 Hz
  30 - 17,000 Hz (±3 dB)
  30 - 13,000 Hz (±3 dB, 0 VU recording)
  30 - 17,000 Hz (DIN)
- With TYPE II cassette (Sony UCX)
  20 - 19,000 Hz
  30 - 17,000 Hz (±3 dB)
  30 - 17,000 Hz (DIN)
- With TYPE I cassette (Sony HF-S)
  20 - 17,000 Hz
  30 - 15,000 Hz (DIN)

Wow and flutter 0.04% WRMS (NAB)
±0.14% (DIN)

Inputs Line inputs (phono jacks)
Sensitivity 77.5 mV (−20 dB)
Input impedance 50 kilohms

Outputs Line outputs (phono jacks)
Rated output level 0.44 V (−5 dB) at load impedance 50 kilohms
Load impedance over 10 kilohms
Headphone output (stereo phone jack)
Output level variable from −20 dB to −50 dB at a load impedance of 8 ohms

– Continued page 2 –

SAFETY-RELATED COMPONENT WARNING!!

COMPONENTS IDENTIFIED BY SHADING AND MARK ⚠ ON THE SCHEMATIC DIAGRAMS AND IN THE PARTS LIST ARE CRITICAL TO SAFE OPERATION. REPLACE THESE COMPONENTS WITH SONY PARTS WHOSE PART NUMBERS APPEAR AS SHOWN IN THIS MANUAL OR IN SUPPLEMENTS PUBLISHED BY SONY.

ATTENTION AU COMPOSANT AYANT RAPPORT À LA SÉCURITÉ!

LES COMPOSANTS IDENTIFIÉS PAR UNE TRAME ET UNE MARQUE ⚠ SUR LES DIAGRAMMES SCHÉMATIQUES ET LA LISTE DES PIÈCES SONT CRITIQUES POUR LA SÉCURITÉ DE FONCTIONNEMENT. NE REMPLACER CES COMPOSANTS QUE PAR DES PIÈCES SONY DONT LES NUMÉROS SONT DONNÉS DANS CE MANUEL OU DANS LES SUPPLÉMENTS PUBLIÉS PAR SONY.

MICROFILM

STEREO CASSETTE DECK
SONY®

TC

General

Power requirements

AEP model: 220 V ac, 50/60 Hz
(240 V ac adjustable by authorized Sony personnel)
US, Canadian model: 120 V, 60 Hz
E model: 120, 220 or 240 V ac adjustable, 50/60 Hz

Power consumption
27 watts

Dimensions Approx. 430 × 105 × 275 mm (w/h/d)
(17 × 4¼ × 10⅞ inches)
including projecting parts and controls

Weight Approx. 6.2 kg (13 lbs 11 oz)

Supplied accessories
Connecting cord (2)
Remote control cord (1)

0dB = 0.775V

MODEL IDENTIFICATION

– Specification Label –

US, Canadian, AEP, G-AEP model: K501R
E model: K501ES

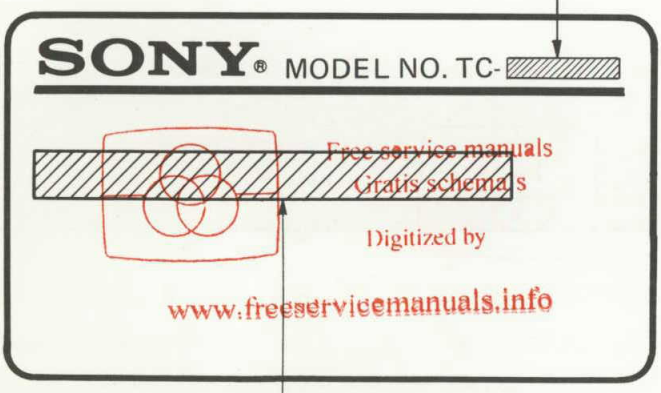

US, Canadian model: AC: 120V 60Hz 27W
AEP, G-AEP model: AC: 220V ~ 50/60Hz 27W
E model: AC: 120, 220, 240V ~ 50/60Hz 27W

SAFETY CHECK-OUT (US Model)

After correcting the original service problem, perform the following safety check before releasing the set to the customer:
Check the antenna terminals, metal trim, "metallized" knobs, screws, and all other exposed metal parts for AC leakage. Check leakage as described below.

LEAKAGE TEST

The AC leakage from any exposed metal part to earth ground and from all exposed metal parts to any exposed metal part having a return to chassis, must not exceed 0.5 mA (500 microampers). Leakage current can be measured by any one of three methods.

1. A commercial leakage tester, such as the Simpson 229 or RCA WT-540A. Follow the manufacturers' instructions to use these instruments.
2. A battery-operated AC milliammeter. The Data Precision 245 digital multimeter is suitable for this job.
3. Measuring the voltage drop across a resistor by means of a VOM or battery-operated AC voltmeter. The "limit" indication is 0.75 V, so analog meters must have an accurate low-voltage scale. The Simpson 250 and Sanwa SH-63Trd are examples of a passive VOM that is suitable. Nearly all battery operated digital multimeters that have a 2 V AC range are suitable. (See Fig. A)

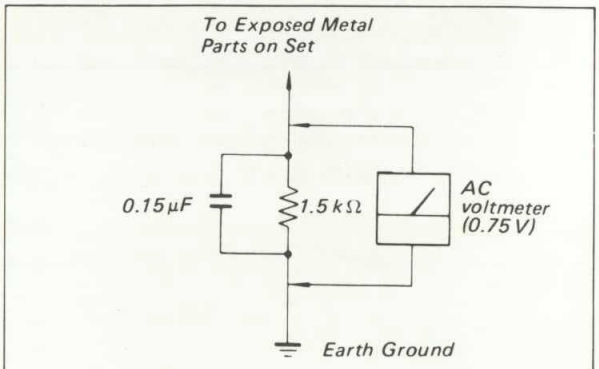

Fig. A. Using an AC voltmeter to check AC leakage.

FEATURES

Auto-reverse recording and playback
The roto-bilateral head assures the same performance characteristics in either tape transport direction.
When the tape reaches its end, the roto-bilateral record/playback head reverses position and the other side of the cassette will be recorded or played back automaticaly.

Excellent sound quality
The record/playback head is made of a laser amorphous magnetic alloy using LC-OFC* winding. This highly durable head provides a wider dynamic range and a more extended frequency response, especially in the high-frequencies.

Recording level calibration
The recording level can be calibrated to the sensitivity of the tape to obtain the optimum performance from the Dolby NR system.

Quick reverse
The head reverses position quickly when the tape reaches the leader tape at the end when recording or playing back the front side of a cassette, allowing recording or playback to be continued with little interruption.

High-quality amplifier section
The recording section and the playback section of the right and left channels are physically separated with the signal paths of the right and left channels parallel, using the symmetric Dolby NR IC.

Useful functions
- The digital linear counter indicates the recording or playback time elapsed on the tape so that the tape can be precisely indexed.
- Bright FL-display peak program meters follow the transient peaks of the music and maintain the peak readings.
- The C-type Dolby NR system reduces tape noise twice as effectively as the conventional B-type system.
- The AMS (Automatic Music Sensor), blank skip and music scan functions allow you to locate the desired selection easily.
- The automatic tape select system adjusts the cassette deck to achieve the optimum recording and playback characteristics for each tape type.
- Using the optional remote control unit, various operations can be remotely controlled.
- A timer switch is provided to turn the deck on and off at preset times using the optional timer.

QUICK REVERSE

This cassette deck is provided with a quick reverse function which utilizes an infrared sensor. In a conventional reverse system, the head reverses position when the tape is wound completely to the end, so the program cannot be recorded while the leader tape is passing over the head. In the quick reverse system, an infrared sensor detects the difference between the magnetic particle coated tape and the leader tape, so the head can reverse position immediately before the leader tape.

The quick reverse function may not operate correctly when:
- recording or playback is started within 10 seconds before the leader tape.
- the leader tape is striped or of such a dark color as infrared rays cannot pass through, or the cassette has no leader tape.
- the base tape of the magnetic particle coated section is very thin, as in a C-120 cassette.
- the quick reverse sensor is exposed to strong light.
- the tape has been spliced with a piece of splicing tape.

Cleaning the tape guide
The quick reverse system of this deck detects the difference between the magnetic particle coated section and the leader tape section of a tape, using the infrared sensor and the reflector on the tape guide. To ensure that the quick-reverse function always works properly, clean the reflector as illustrated in Fig. 1 with a dry cleaning tip.

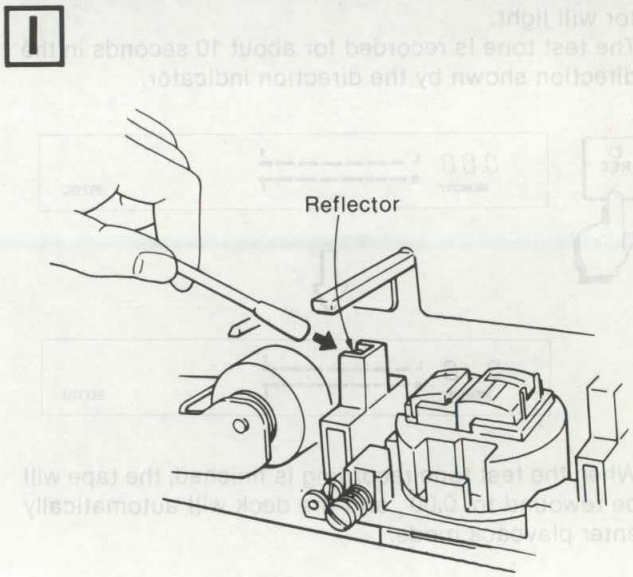

RECORDING LEVEL CALIBRATION

There are many different cassettes on the market and their characteristics vary. With this cassette deck you can adjust the recording characteristics much more precisely using the recording level calibrating function.

The Dolby NR function is most effective when the recording level and the playback level are the same. Calibrate the recording level as follows. Tape sensitivity will be compensated for automatically.

Note
The recording of the test tone, and rewinding and playback are performed automatically.

Operation

1 Depress the POWER switch to turn on the unit.
2 Press the ⏏ button and insert a cassette.
3 Press the REC CAL button.
The REC CAL indicator will light, and the display will change to the scale used for REC LEVEL calibration. CAL is displayed in the digital linear counter.

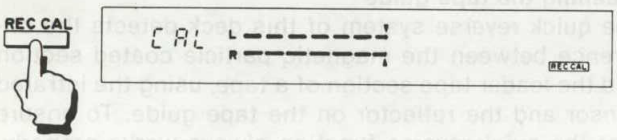

4 Press the ● button during the 2 seconds during which the REC CAL indicator is lit.
The counter is reset to 0.00, and the MEMORY indicator will light.
The test tone is recorded for about 10 seconds in the direction shown by the direction indicator.

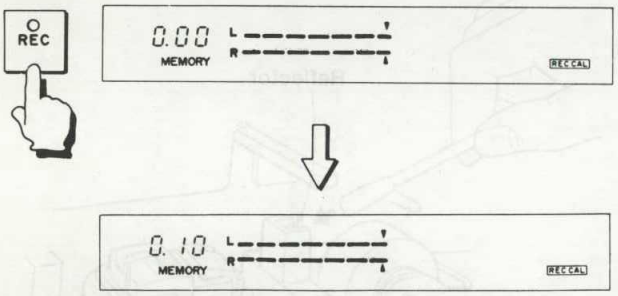

When the test tone recording is finished, the tape will be rewound to 0.00, and the deck will automatically enter playback mode.

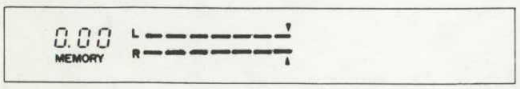

5 During the playback of the test tone, adjust the L and R channels with the REC CAL controls so the meters deflect to the ⧗ point.

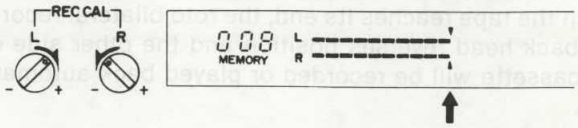

When the recorded test tone playback is finished, the tape will be rewound to the vicinity of 0.00 and stop.

Tape movement (▷ FORWARD)

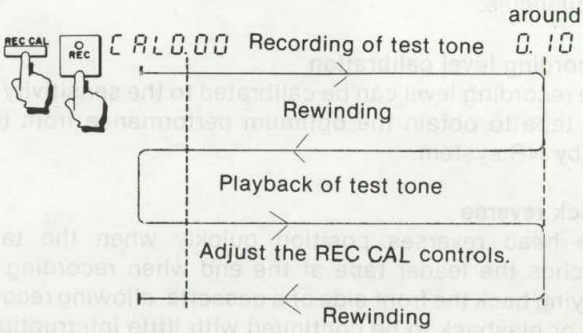

While the REVERSE ◁ indicator is lit, the tape moves in the opposite direction to the above.

Notes

- Adjust the REC CAL controls before the end of the playback of the test tone (Approx. 10 seconds). If adjustment is not finished during this period, press the REC CAL button and the ● button, and start again.
- When the test tone is being played back, the peak program meters may flicker slightly. This is because the meters can follow very slight changes in the sound level, and is no problem.
- The test tone is recorded at the proper level regardless of the position of the REC CAL controls.
- Do not calibrate the recording level near the beginning or the end of the tape.
- Set the REC CAL controls to the center detent position when recording without having made the REC LEVEL calibration.

FUNCTION OF CONTROLS

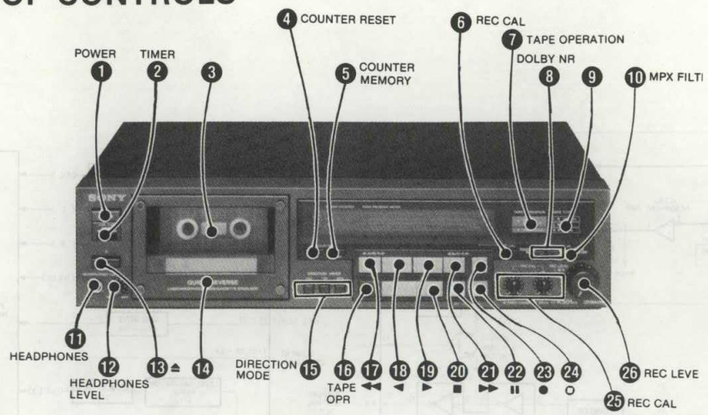

❶ POWER switch

❷ TIMER switch
You can set the unit to record or play back at a predetermined time by connecting any commercially available timer.

❸ Cassette holder

❹ COUNTER RESET button
Press to reset the tape counter to zero.

❺ COUNTER MEMORY button
Used for the memory stop/play.

❻ REC CAL button
To calibrate the recording level to the sensitivity of the tape, press this button before pressing the REC button. The recording level calibration will begin, and the test tone will be automatically recorded for about 10 seconds.

❼ TAPE OPERATION indicator
These indicators show the tape operation selected with the TAPE OPR button.

❽ DOLBY NR* switches
For recording or playback with Dolby B-type system, set the DOLBY NR switch to B. For recording or playback with Dolby C-type NR system, set it to C. For recording without Dolby NR system, set it to OFF.

*"Dolby" and the double-D symbol are trade marks of the Dolby Laboratories Licensing Corporation. Noise reduction system manufactured under license from Dolby Laboratories Licensing Corporation.

❾ TAPE TYPE indicator
When a cassette is inserted, the appropriate tape type indicator lights up.

❿ MPX FILTER switch
Normally set this switch to OFF.
When recording FM stereo broadcasts with the Dolby NR system, set it to ON if the 19 kHz pilot signal and the 38 kHz subcarrier have not been adequately suppressed by the FM tuner or receiver.
If the tuner or the receiver suppresses such signals adequately (most high-quality tuners and receivers will), you do not have to set this switch to ON.
When your tuner is not equipped with the MPX filter or when the recorded FM broadcasting sound is audibly distorted, set this switch to ON.

⓫ HEADPHONES jack (stereo phone jack)

⓬ HEADPHONES LEVEL control
This control adjusts the headphone level.

⓭ ⏏ (eject) button
Press this button to open the cassette holder.

⓮ Direction indicator
Lights to show which side of the cassette is being played back or recorded on.

⓯ DIRECTION MODE buttons
Depress one of the buttons to select the mode of tape movement for recording and playback.
⇄ (one-direction) button: To record or play back one side of the cassette.
⊃ (one-cycle) button: To record or play back both sides of the cassette. If this button is pressed when the reverse side of the cassette is being recorded or played back, the tape will stop at the end of that side.
⊂⊃ (five-cycle) button: To play back both sides of the cassette five times or to record both sides of the cassette . If this button is pressed when the reverse side of the cassette is being played back, the tape will stop at the end of the 5th playback of the reverse side so that the front side will have been played back only four times.
When recording is made, the tape will stop at the end of the reverse side.

⓰ TAPE OPR button
To activate the AMS/blank skip function or the music scan function, press this button, so that the corresponding indicator lights up. Each time the button is pressed, the AMS/BLANK SKIP indicator, MUSIC SCAN indicator or no indicator lights up in sequence.
During the AMS/blank skip or the music scan operation, the ▶ button (when the front side of the cassette is played back) or the ◀ button (when the reverse side is being played back) blinks.

⓱ ◀◀ (fast-reverse) button
Press this button to advance the tape rapidly to the left. It is also used for the auto play, AMS and music scan function.

⓲ ◀ (reverse play) button
Press this button to play back the reverse side of the cassette. To record on the reverse side, press this button while holding the ● button down. The tape will be transported to the left.

⓳ ▶ forward button
Press this button to play the front side of the cassette. To record, press this button while holding the ● button down. The tape is transported to the right.

⓴ ■ (stop) button

㉑ ▶▶ (fast-forward) button
Press this button to advance the tape rapidly to the right. It is also used for the auto play, AMS and music scan function.

㉒ ❚❚ PAUSE button
Press this button to stop the tape running for a moment during recording or playback.

㉓ ● REC (record) button
Press this button together with the ◀ or ▶ button to start recording. When this button is pressed for recording level adjustment, the indicator of this button will light. The deck will detect the tab of the cassette and the indicator of the ◀ button or the ▶ button will light. If the tab has been removed, the indicator will not light.

㉔ ○ REC MUTE button
Press this button to eliminate unwanted material and to insert a blank space during recording.

㉕ REC CAL controls
Use these controls to finely adjust the recording level according to the sensitivity of each tape.

㉖ REC LEVEL (recording level) controls
These controls adjust the recording level.

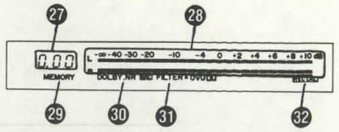

㉗ Digital linear counter
Indicates the approximate tape running time.

㉘ Peak program meters
These meters show the peak input level of each channel during recording, and recorded levels in the playback mode.

㉙ MEMORY indicator
When the COUNTER MEMORY button is pressed, this indicator shows that the memory counter function is engaged.

㉚ Dolby NR indicators
The selected Dolby NR B or C type is indicated here.

㉛ FILTER indicator
This indicator will light when the MPX FILTER switch is set to ON.

㉜ REC CAL indicator
This indicator will light during the REC LEVEL calibration operation. The display of the peak program meters changes to the scale used for REC LEVEL calibration.

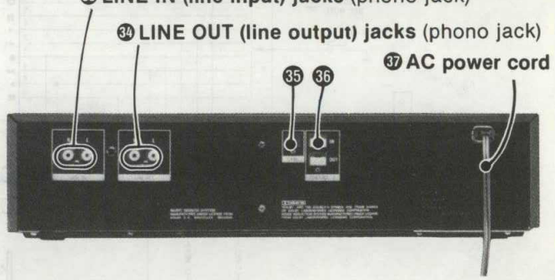

㉟ SYNC connector (3-pin)
For synchro recording, connect to the SYNC connector of Sony's turntable system. For further details, refer to the instruction manual of the Sony turntable system.

㊱ CONTROL S connector (4-pin)
OUT: Connect to the CONTROL S IN or R REMOTE IN connector of other Sony audio equipments with the supplied flat 4-pin remote control cord for remote control of the total audio system.
IN: Connect to the CONTROL S OUT or R REMOTE OUT connector of an optional Sony system control tuner or receiver for remote control of the total audio system.

TC-K501R/K501ES

SECTION 1
BLOCK DIAGRAM

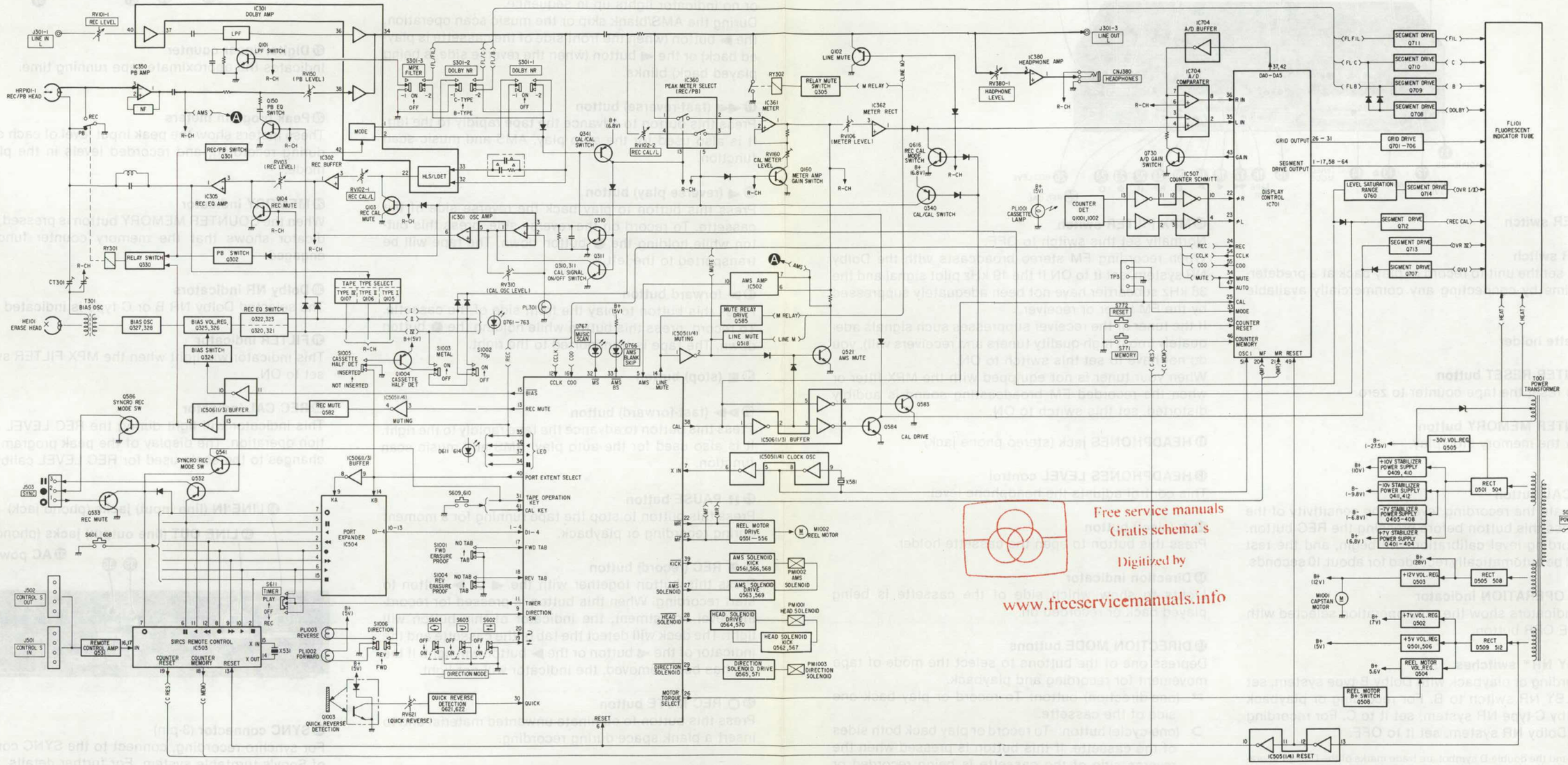

SECTION 2
DISASSEMBLY

Note: Follow the disassembly procedure in the numerical order given.

CASE REMOVAL

- Remove case by taking out four screws securing case.

FRONT PANEL

Take out 6 screws to remove front panel.

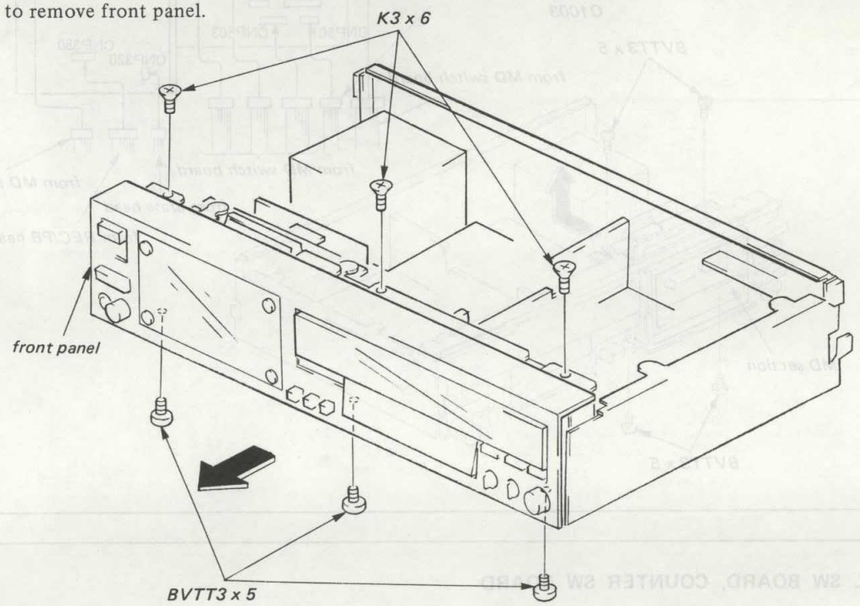

CASSETTE WINDOW

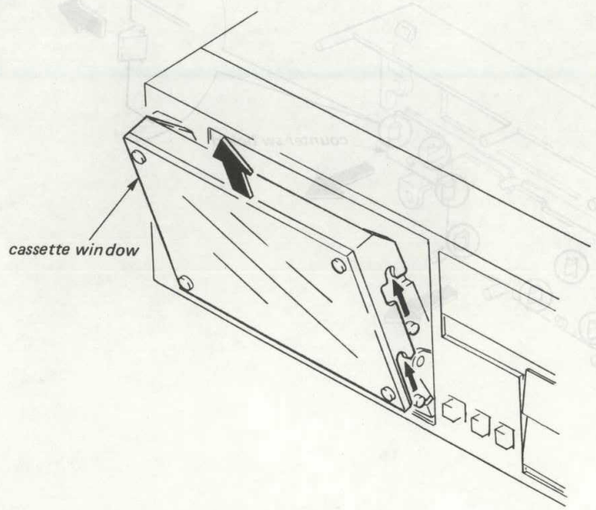

DISPLAY, CONTROL BLOCK

The display/control block can be taken out by removing 2 screws and 2 pawls.

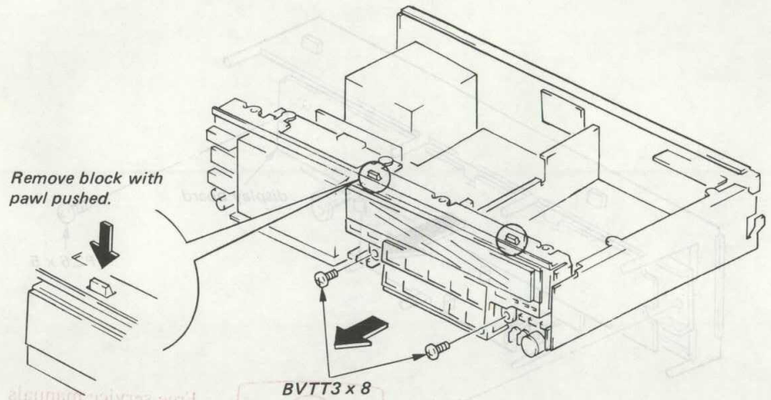

BOTTOM PLATE

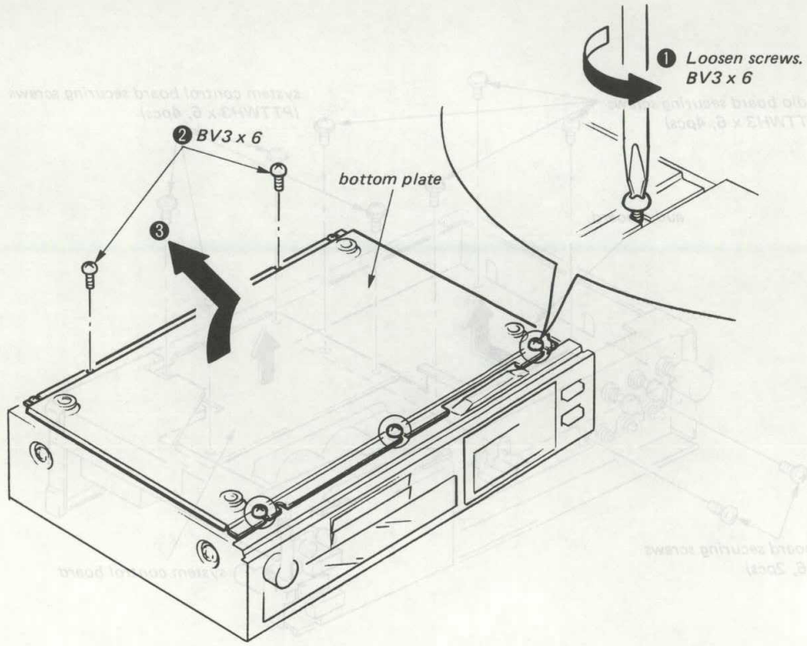

DISPLAY BOARD

Take out 2 screws to remove indicator board.

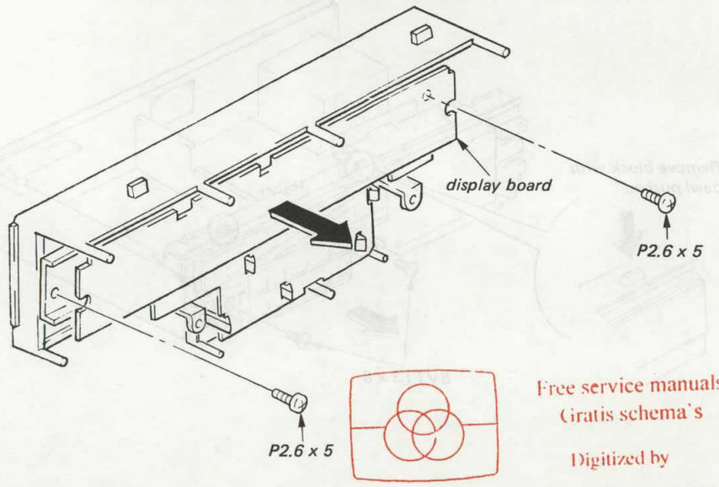

AUDIO BOARD, SYSTEM CONTROL BOARD

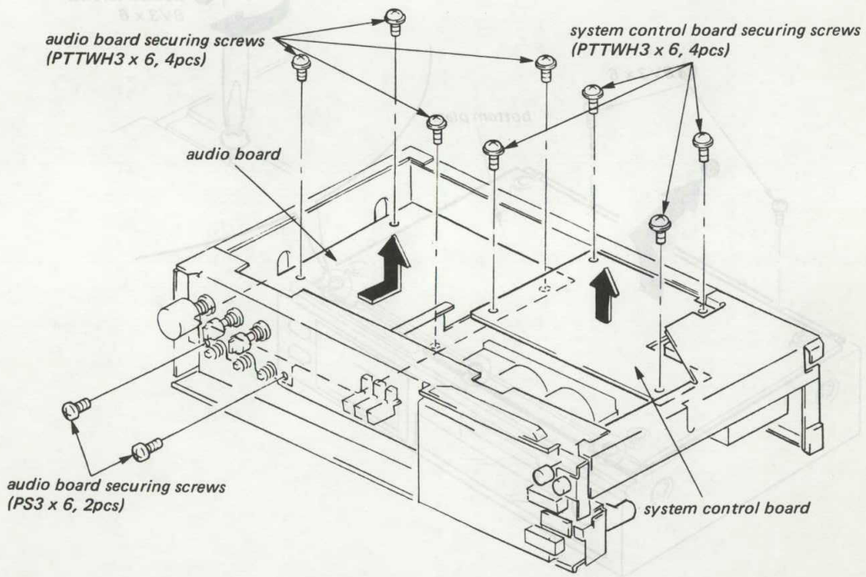

MD SECTION

- Remove MD section after removing system control board.
- Take out 4 screws and connectors from MD section as illustrated on the right to remove MD section.

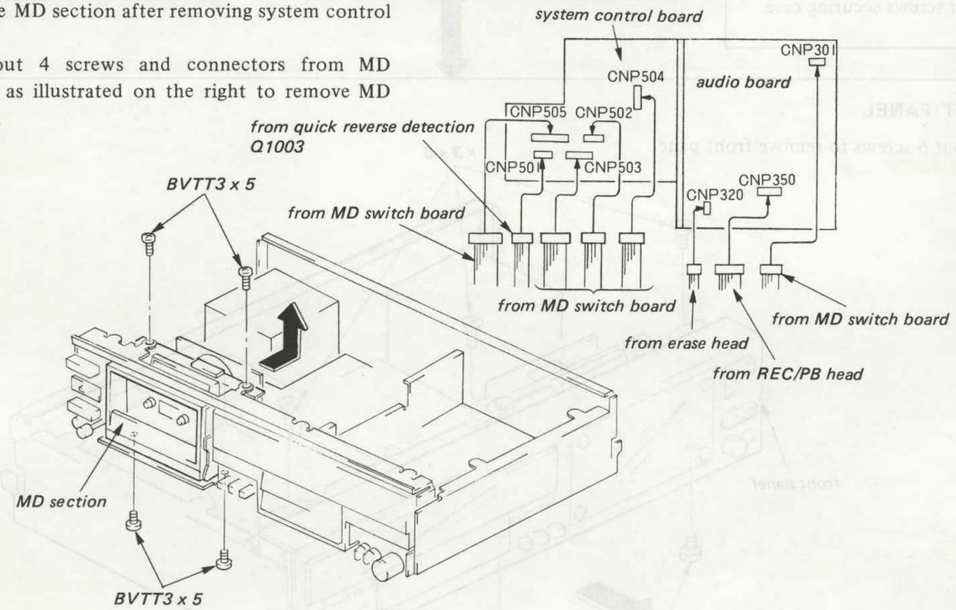

CONTROL SW BOARD, COUNTER SW BOARD

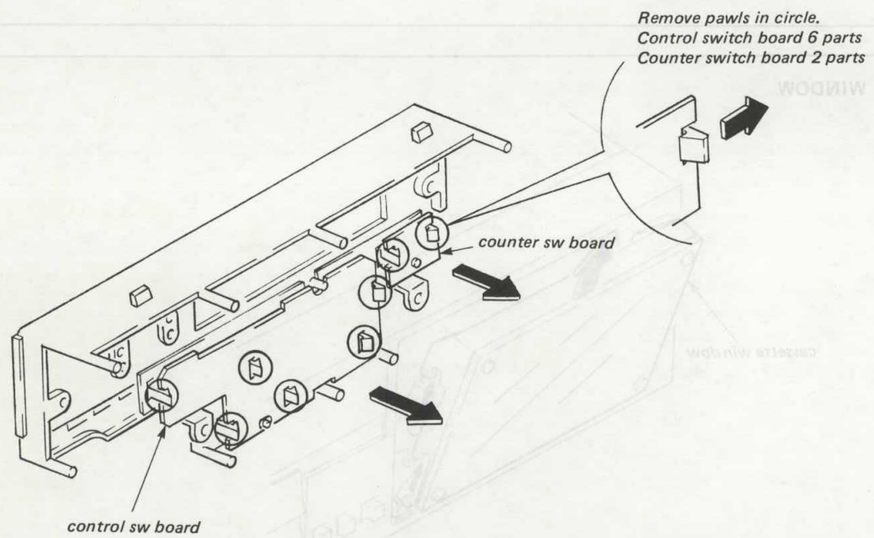

CASSETTE HOLDER

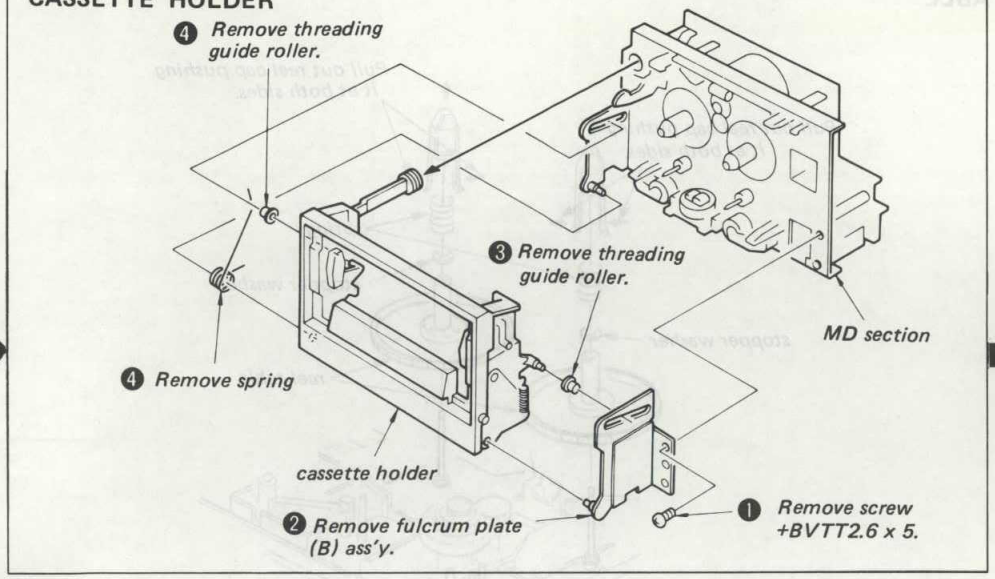

CAPSTAN MOTOR

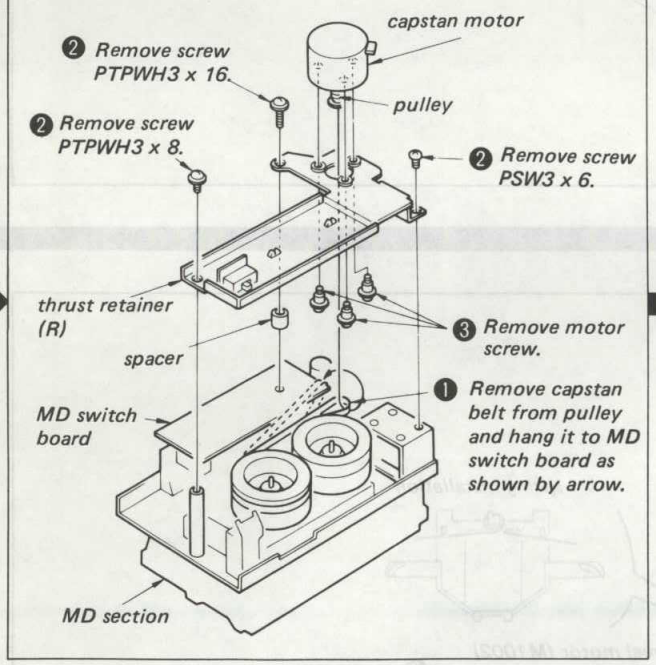

FLYWHEEL

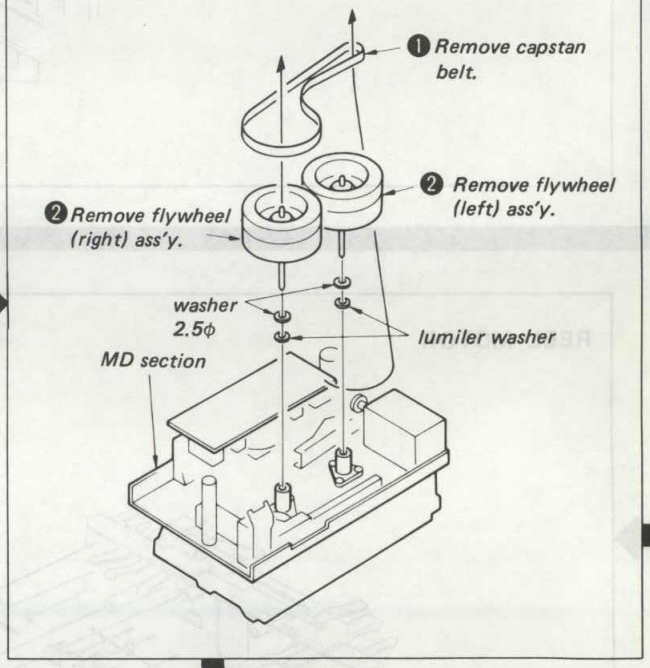

BRAKE SOLENOID

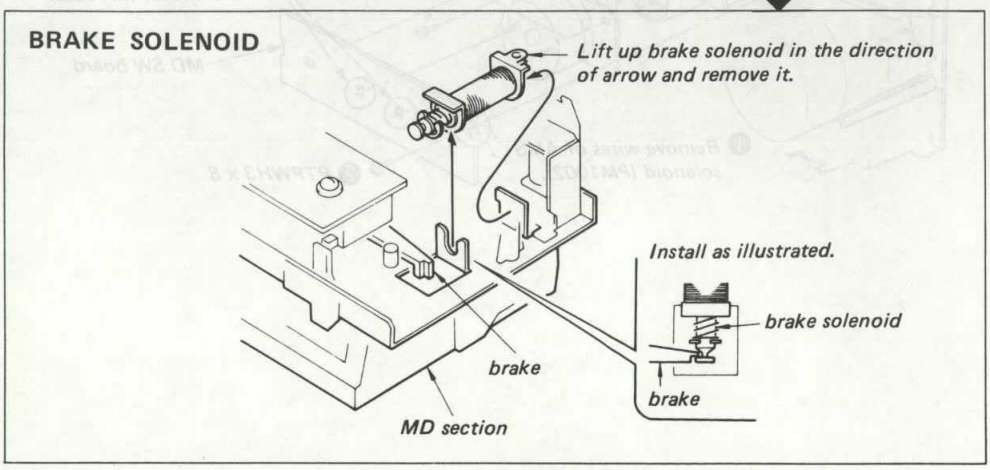

REEL TABLE

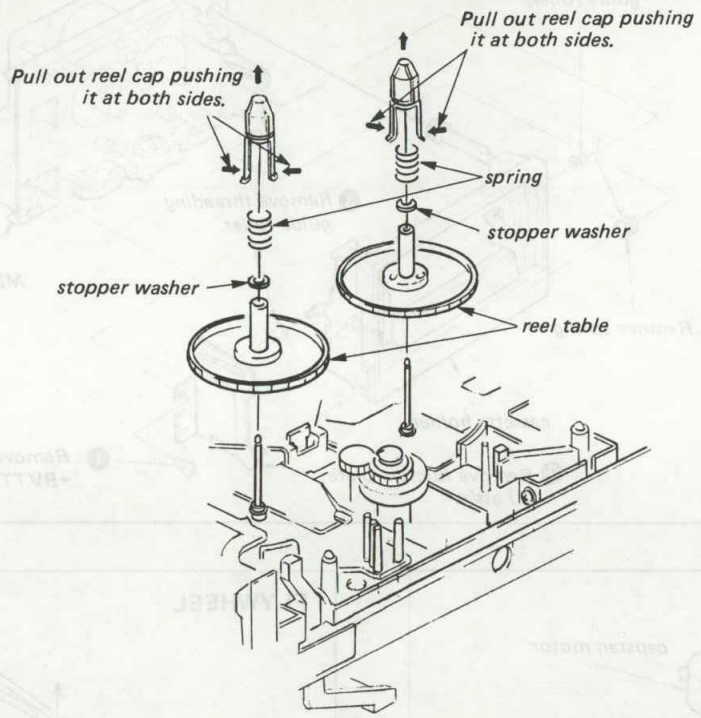

REEL MOTOR

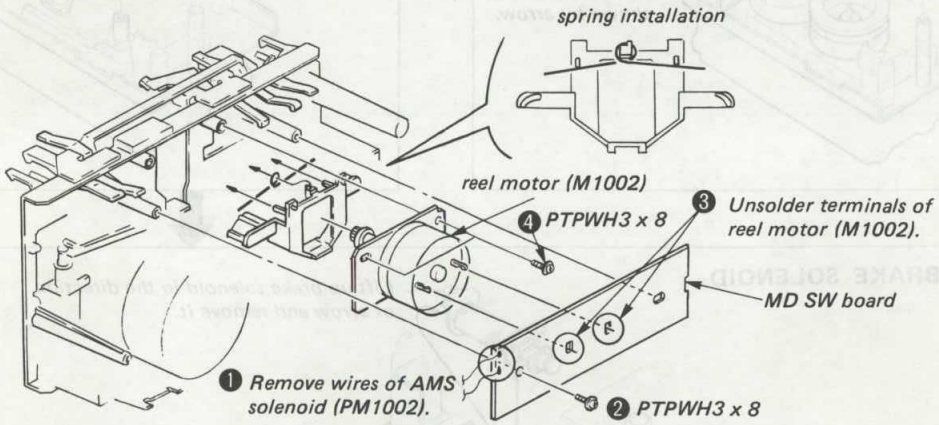

ROTARY HEAD BLOCK

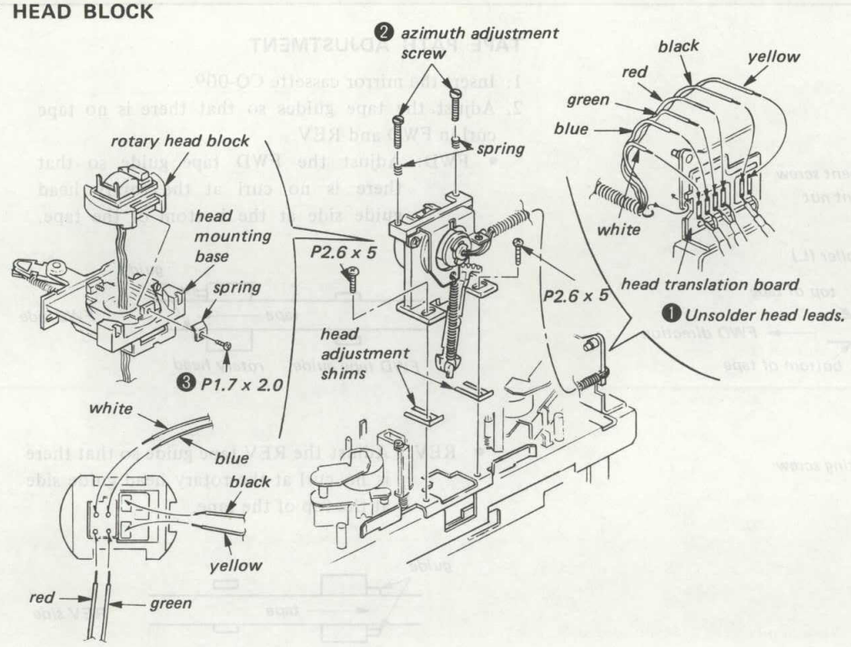

CASSETTE HOLDER (FOR ROTATING HEAD/TAPE GUIDE AND TAPE PASS ADJUSTMENT)

Note: Perform this cassette holder removal when adjustment.

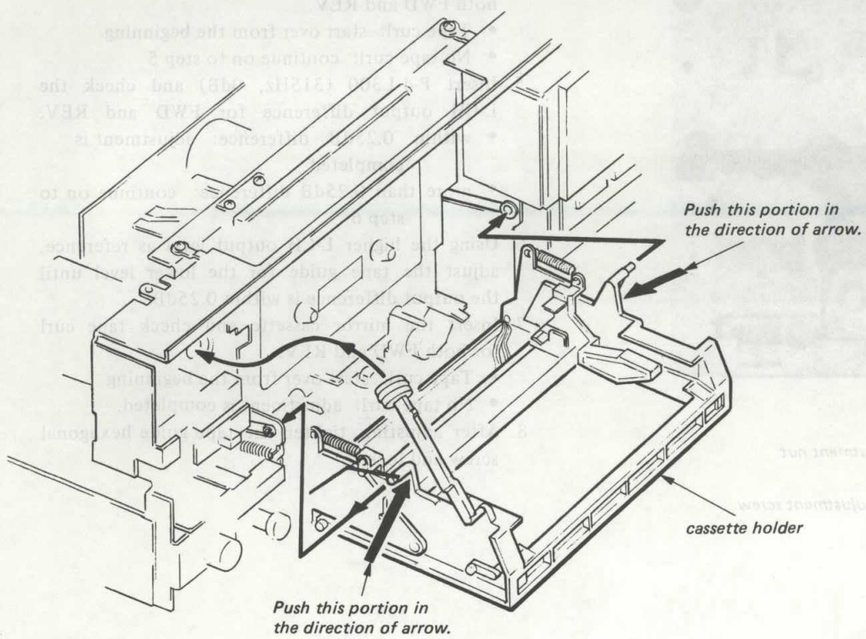

SECTION 3
ADJUSTMENTS

3-1. MECHANICAL ADJUSTMENTS

PRECAUTION

1. Clean the following parts with a denatured-alcohol-moistened swab:

   record/playback/erase head — rubber belts
   capstan — idlers
   pinch roller

2. Demagnetize the head with a head demagnetizer.
3. Do not use a magnetized screwdriver for the adjustments.
4. After the adjustments, apply suitable locking compound to the parts adjusted.
5. The adjustments should be performed with the rated power supply voltage unless otherwise noted.

Torque Measurement

Torque	Torque meter	Meter reading
Forward	CQ-102C	30 – 60 g-cm (0.41 – 0.82 oz·inch)
Reverse	CQ-102B	
Fast Forward and Rewind	CQ-201B	70 – 120 g-cm (0.97 – 1.67 oz·inch)

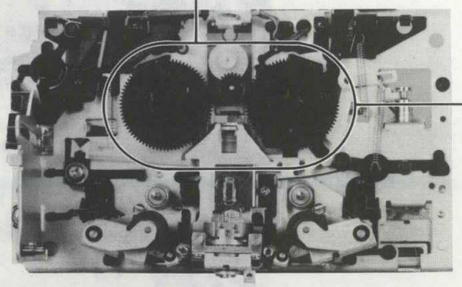

BACK TENSION ADJUSTMENT

– FWD and REV playback modes –

FWD
Torque meter CQ102C: 3.5 – 6.0 g-cm
(0.05 – 0.08 oz·inch)

REV
Torque meter CQ102RB. 3.5 – 6.0 g-cm
(0.05 – 0.08 oz·inch)

After adjustment, apply locking compound.

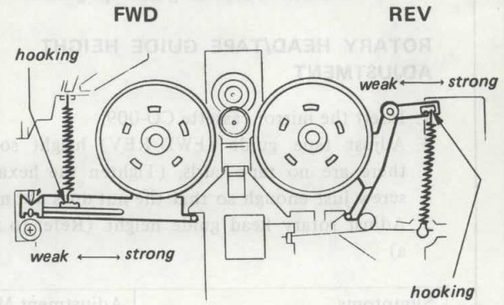

TEMPORARY ADJUSTMENT WHEN REPLACING ROTARY HEAD BLOCK

Note: Be sure to perform this temporary adjustment first when replacing the head. If operation is performed without doing this adjustment first, the tape may be damaged.

Adjustment Method:

Adjust the FWD and REV recording and playback head azimuth adjustment screws, and adjust, checking by eye, so that the long side of the head frame and the head mounting base are parallel. Refer to the figure below.

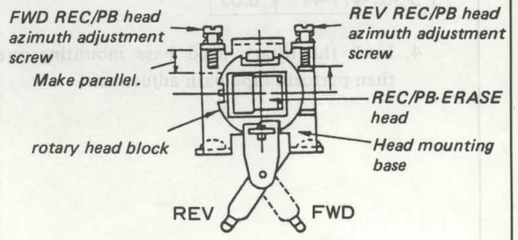

NOTES ON HEAD REPLACEMENT

Rotary head guide height adjustment and tape path adjustment affect each other, so perform each one separately.

Note 1: When replacing the REC/PB and ERASE head, be sure to perform the temporary adjustment described on the previous page. If this is not done before operating, the tape may be damaged.

Note 2: Perform tape guide height adjustment only when after replacing the tape guides.

ROTARY HEAD/TAPE GUIDE HEIGHT ADJUSTMENT

1. Insert the mirror cassette CQ-009.
2. Adjust tape guide (FWD/REV) height so that there are no tape curls. (Tighten the hexagonal screw just enough so that the nut does not move.)
3. Adjust rotary head guide height. (Refer to figure a)

Symptoms	Adjustment Method
Curl at top of tape for both FWD and REV	Add shim. (0.2 + 0.1 = 0.3t)
Curl at bottom of tape for both FWD and REV	Replace shim. (0.2t → 0.1t)
Curl at top of tape for FWD, curl at bottom of tape for REV.	Loosen rotation center screw
Curl at bottom of tape for FWD, curl at top of tape for REV	Tighten rotation center screw

Shim List

Part No.	t
3-307-477-01	0.1
3-307-477-11	0.2
3-307-477-21	0.3
3-307-477-31	0.4
3-307-477-41	0.05

4. Lock the rotary head base mounting screw and then perform tape path adjustment.

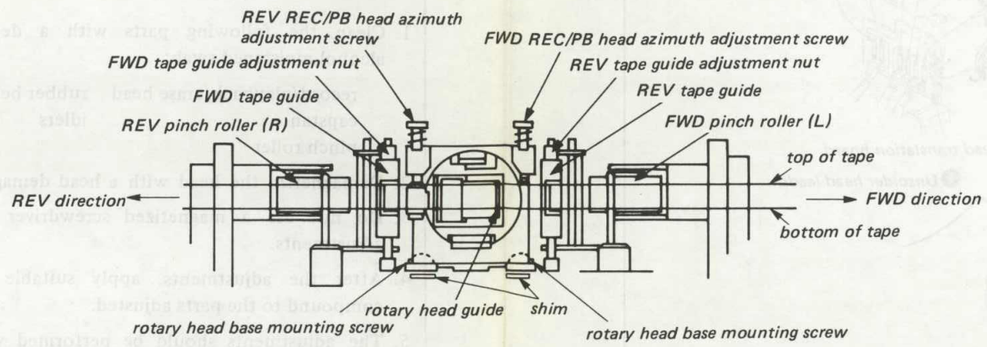

Fig. a View of the Mirror Cassette

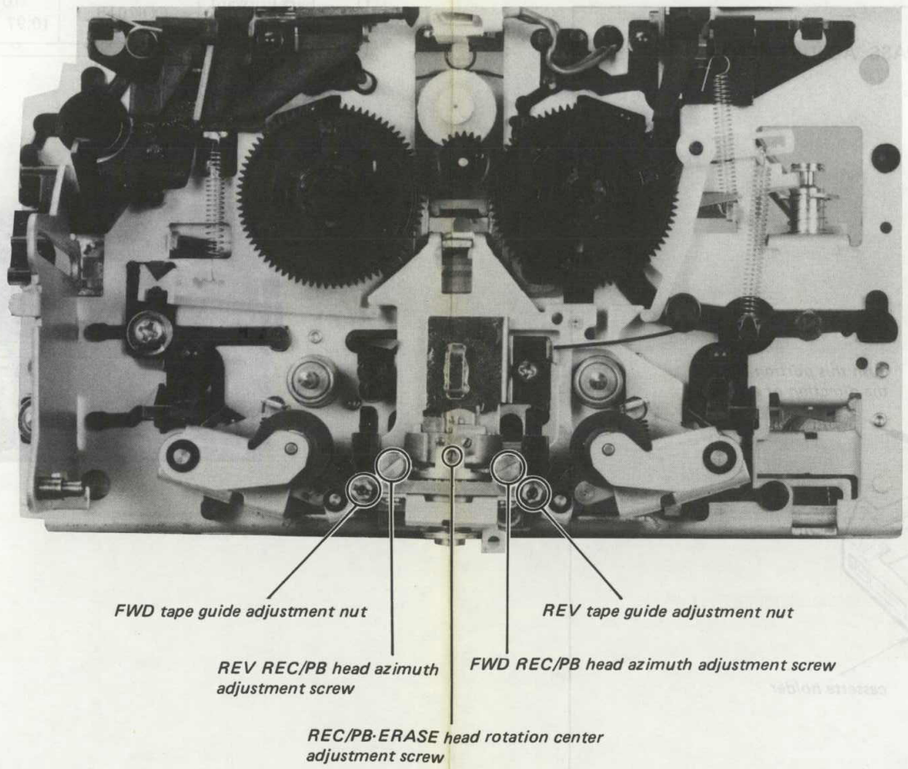

TAPE PATH ADJUSTMENT

1. Insert the mirror cassette CQ-009.
2. Adjust the tape guides so that there is no tape curl in FWD and REV.
   - FWD: Adjust the FWD tape guide so that there is no curl at the rotary head guide side at the bottom of the tape.

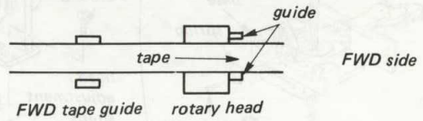

   - REV: Adjust the REV tape guide so that there is no curl at the rotary head guide side at the top of the tape.

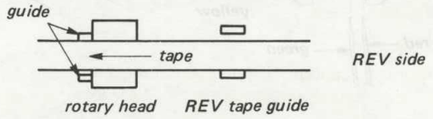

3. Perform REC/PB head azimuth adjustment. (Refer to page 20 for adjustment method.)
   - Maximum output for both FWD and REV
   - Resurge waveform: within 30°
4. Insert the mirror cassette and check tape curl for both FWD and REV.
   - Tape curl: start over from the beginning
   - No tape curl: continue on to step 5
5. Insert P-4-L300 (315Hz, 0dB) and check the L-CH output difference for FWD and REV.
   - within 0.25dB difference: adjustment is completed
   - more than 0.25dB difference: continue on to step 6
6. Using the higher L-CH output level as reference, adjust the tape guide for the lower level until the output difference is within 0.25dB.
7. Insert the mirror cassette and check tape curl for both FWD and REV.
   - Tape curl: start over from the beginning
   - No tape curl: adjustment is completed.
8. After adjusting, tighten the tape guide hexagonal screw and lock it.

3-2. ELECTRICAL ADJUSTMENTS

Note: The adjustment should be performed in the order given in this service manual.
The adjustments should be performed for both L-CH and R-CH.

- Set the TAPE SELECT switches according to the tape as follows.

Tape	TAPE SELECT switch
CS-15	AUTO
CS-26	AUTO
CS-42	AUTO

- Switches and controls should be set as follows unless otherwise specified.

DOLBY NR: OFF
TIMER : OFF
REC CAL : center (center click)

- Standard Record:
Deliver the standard input signal level to the input jack and set the REC LEVEL control to obtain the standard output signal level.

– Record Mode –

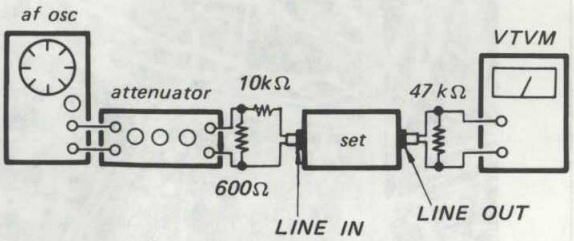

Standard Input Level

	LINE IN
source impedance	10kΩ
input level	0.25V (–10dB)

Standard Output Level

	LINE OUT	PHONES
load impedance	47kΩ	8Ω
output level	0.44V (–5dB)	31mV (–28dB)

Tape Speed Adjustment

Procedure:

1. Mode: forward playback

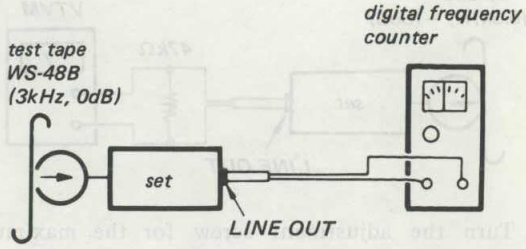

Play back the beginning of tape in forward mode, and adjust the adjustable resistor that built in motor for 2,970 to 3,000Hz reading on the frequency counter.

2. Play back at the tape position in the step 1 in reverse mode. Confirm that the frequency counter reading 2,970 to 3,000Hz at that time.
3. Play back the beginning of opposite side of the tape in forward and reverse mode. Confirm that the frequency counter reading is 2,970 to 3,000Hz at that time.

Adjustment Location: Motor (M1001)

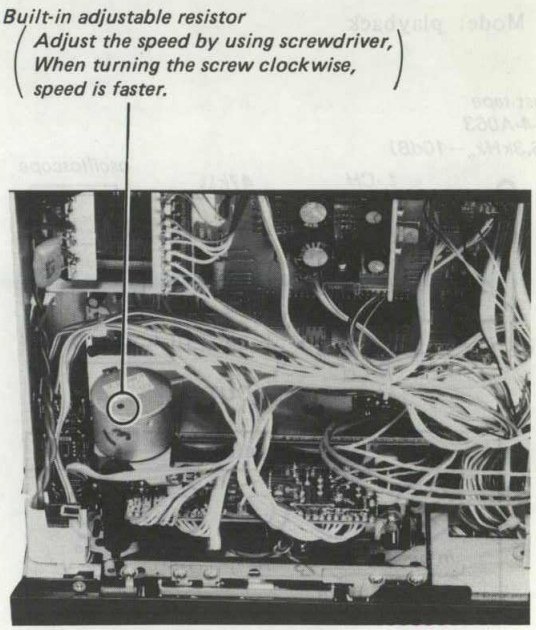

Forward Record/playback
Reverse Record/playback

Head Azimuth Adjustment

Procedure:

1. Forward playback
2. Mode: playback

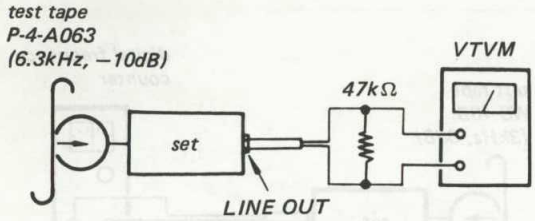

3. Turn the adjustment screw for the maximum output levels. If these levels do not match, turn the adjustment screw until both of output levels match together within 1dB.

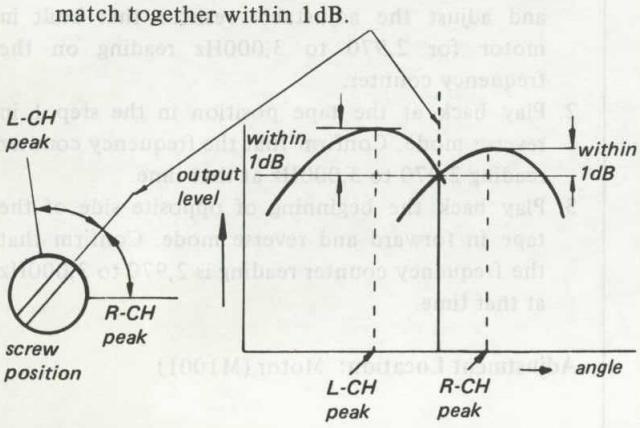

4. Mode: playback

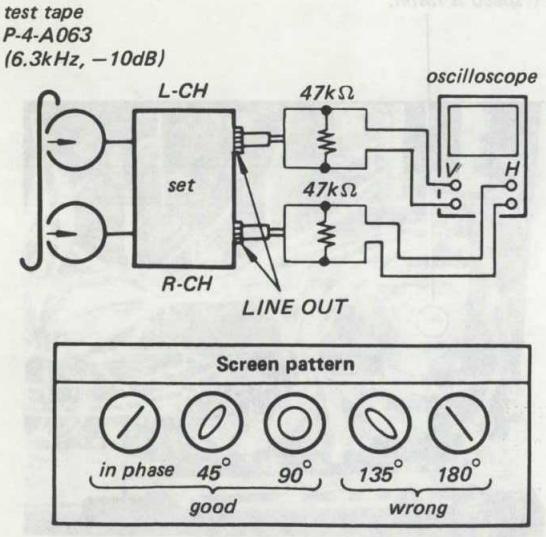

5. After the adjustment, lock the screws with locking compound.
6. Reverse playback.
7. Perform step 2 – 5 similarly.

Playback Level Adjustment

Procedure:

Mode: forward playback

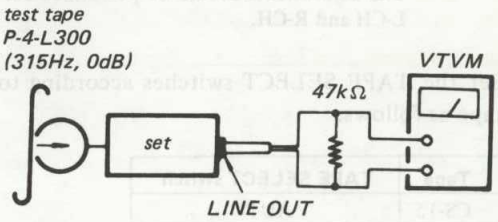

Adjust the RV150 (L-CH) and RV250 (R-CH) so that the specification is met.

Specification:

LINE OUT level: 0.41 to 0.46V
(−5.5 to −4.5dB)

Level difference between channels:
less than 0.3dB

Check that the LINE OUT level does not change in playback mode while changing the mode from playback to stop several times.

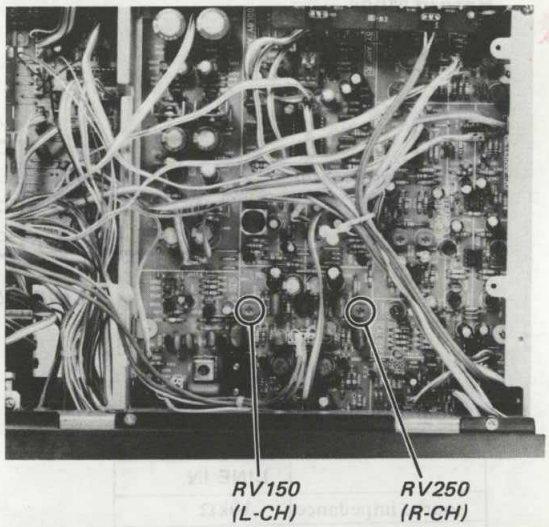

Adjustment Location:

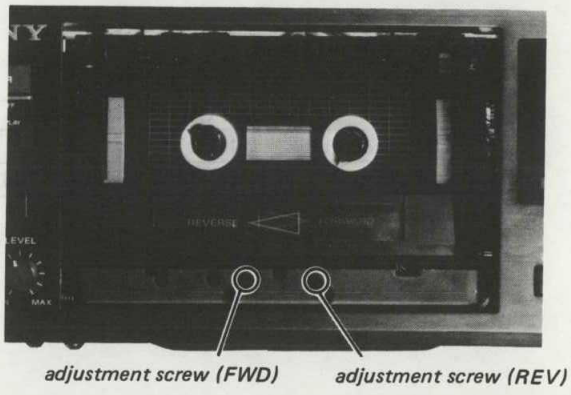

Record Bias Adjustment

Setting:

REC level control: standard record (See page 19.)

Procedure:

1. Mode: record

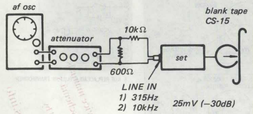

2. Mode: playback

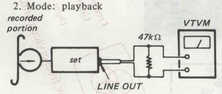

Confirm that the 10kHz playback output is 0dB relative to the 315Hz output. If necessary, adjust CT301 and repeat the steps given above.

Adjustment Location: audio board

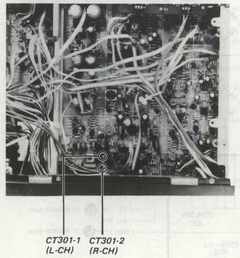

Record Level Adjustment

Setting:

REC level control: standard record (See page 19.)

Procedure:

1. Mode: record

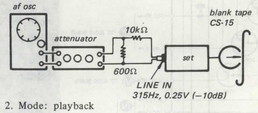

2. Mode: playback

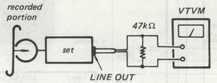

3. Play back the signal recorded in step 1. Confirm that the signal level is within the specification below. If necessary, adjust RV103 (L-CH) RV203 (R-CH) and repeat the step 1-3.

Specification:

blank tape	LINE OUT level
CS-15	0.41 to 0.46V (−5.2 to −4.8dB)
CS-26, 42	0.35 to 0.44V (−7 to −5dB)

Adjustment Location: audio board

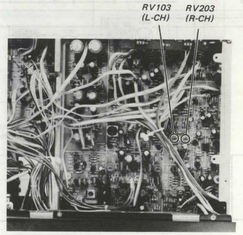

Level Meter Calibration

Procedure:

1. Mode: record

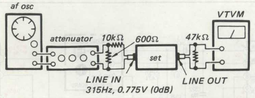

2. Adjust REC LEVEL control (RV101) so that the VTVM reads −5.2dB.
3. Adjust RV106 (L-CH) and RV206 (R-CH) so that OVU (−4dB) segment on the meter lights up.
4. When the LINE OUT level is +9dB, confirm that all segments on the meter light up.

Adjustment Location: audio board

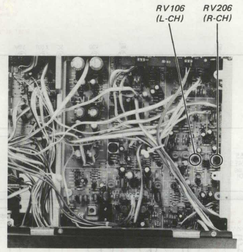

TC-K501R/K501ES TC-K501R/K501ES

CAL Oscillation Level/CAL Meter Level Adjustment

Conditions.

- REC CAL knob: center (center click)
- Ground system control board TP-3 (CAL mode) as shown in the figure. (Display tube displays CAL, and CAL oscillation state begins.)

CAL mode display

Adjustment Method:

– FWD –

1. Connect a VTVM and frequency counter to audio board R316 as shown in the figure.
2. Adjust RV310 so that CAL oscillation level is 0.45V (−4.8dB). At the same time, check that the oscillation frequency is 400Hz ±50Hz on the frequency counter.
3. Insert CS-15, perform recording operation for about 10 seconds, then rewind the tape and play it back. Adjust RV160 (L-CH) and RV260 (R-CH) so that the segment one above the reference position lights up at this time.
4. Stop, check the CAL oscillation level again, and lower the oscillation level to 0.2dB below that value with RV310.
   Final oscillation level value: 0.44V (−5dB)
5. Record and play back again using CS-15, and confirm that the meter indication is lit up to the reference position.
6. Check the meter indication when the REC CAL knob on the panel is set at MIN and MAX.
   MIN: 6–8 segments from the reference position go out.
   MAX: 6–8 segments from the reference position light up.
7. Check step 5 for REV operation.
8. After adjustment, remove the connection to system control board TP-3 (CAL mode).

Connection Location: System control board (TP3)

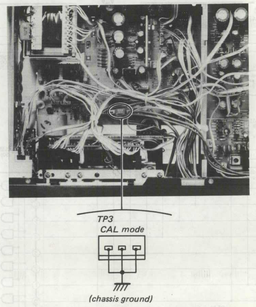

Connection & Adjustment Locations: Audio board

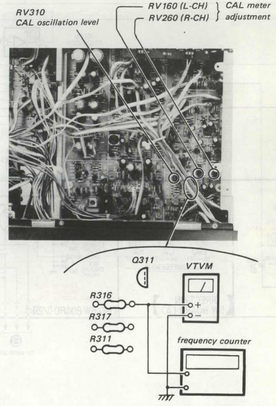

Quick Reverse Sensitivity Adjustment

Conditions:

Direction mode switch:

Adjustment Method:

1. Connect a DC voltmeter to system control board TP2.
2. Insert an empty cassette and put into FWD state.
3. Adjust RV621 for 3V reading on the DC voltmeter.
   - If the voltage is outside of this range, solder bridge section Ⓐ and readjust.

Specification: 3V ±0.5V

4. Repeat FWD, STOP two or three times and check the voltage again.

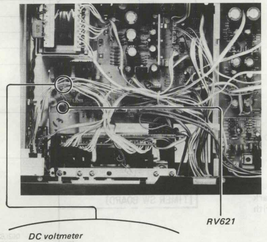

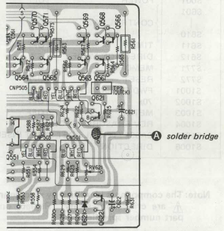

Note:

- All capacitors are in μF unless otherwise noted. pF: μμF 50 WV or less are not indicated except for electrolytics and tantalums.
- All resistors are in Ω and ¼ W or less unless otherwise specified.
- : nonflammable resistor.
- : fusible resistor.
- : B+ bus.
- : B− bus.
- : adjustment for repair.
- Readings are taken under STOP conditions with a VOM (50kΩ/V).
  - ▶ : FWD
  - ◀◀ : REW
  - ● : REC
  - ○ : REC MUTE
  - ▶▶ : FF
  - ■ : STOP
  - ◀ : REV
  - ❚❚ : PAUSE
- Switch

Ref. No.	Switch	Position
S001	POWER	OFF
S601	CONTROL SW	OFF
S610		
S611	TIMER	OFF
S612	DIRECTION MODE	⇄
S771	MEMORY	OFF
S772	RESET	OFF
S1001	FWD ERASURE PROOF	TAB
S1002	70μ	OFF
S1003	METAL	OFF
S1004	REV ERASURE PROOF	TAB
S1005	CASSETTE HALF DET	NOT INSERTED
S1006	DIRECTION	FWD

Note: The components identified by shading and mark ⚠ are critical for safety. Replace only with part number specified.

Note: Les composants identifiés par une trame et une marque ⚠ sont critiques pour la sécurité. Ne les remplacer que par une pièce portant le numéro spécifié.

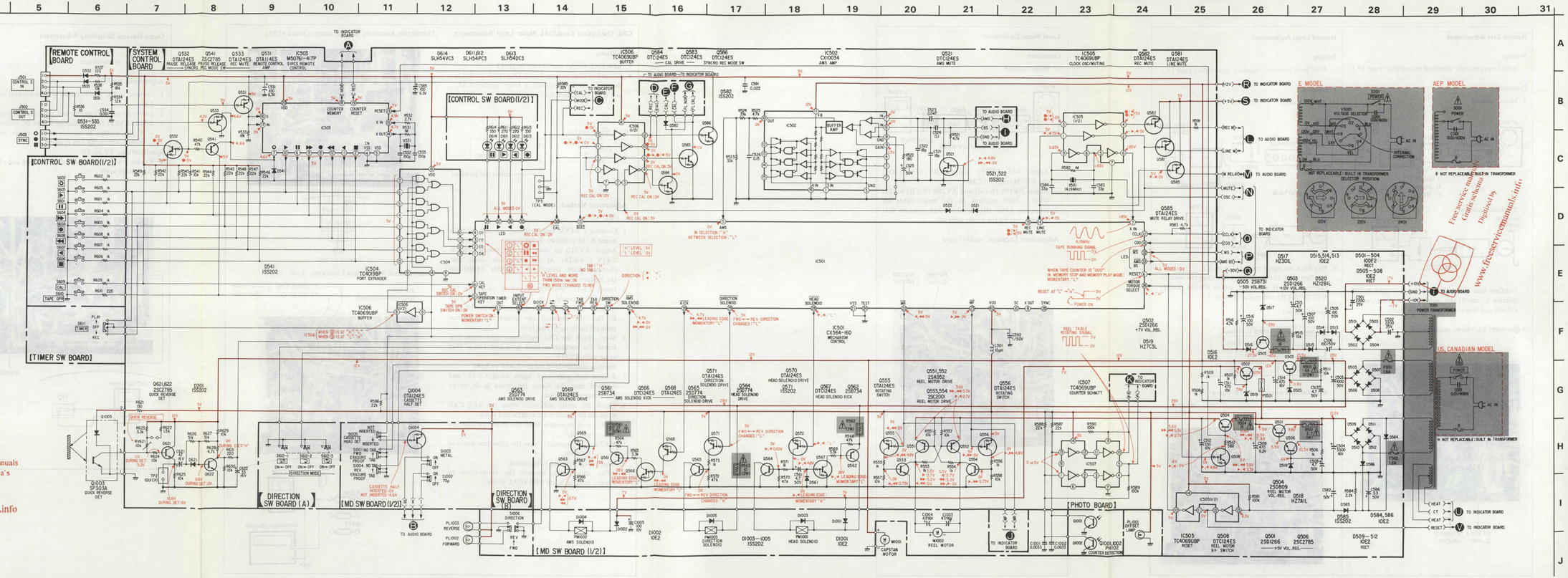

4-2. SCHEMATIC DIAGRAM
– DISPLAY SECTION –

See page 34 for semiconductor lead layouts.

TC-K501R/K501ES TC-K501R/K501ES

TC-K501R/K501ES

4-3. MOUNTING DIAGRAM
– SYSTEM CONTROL SECTION –

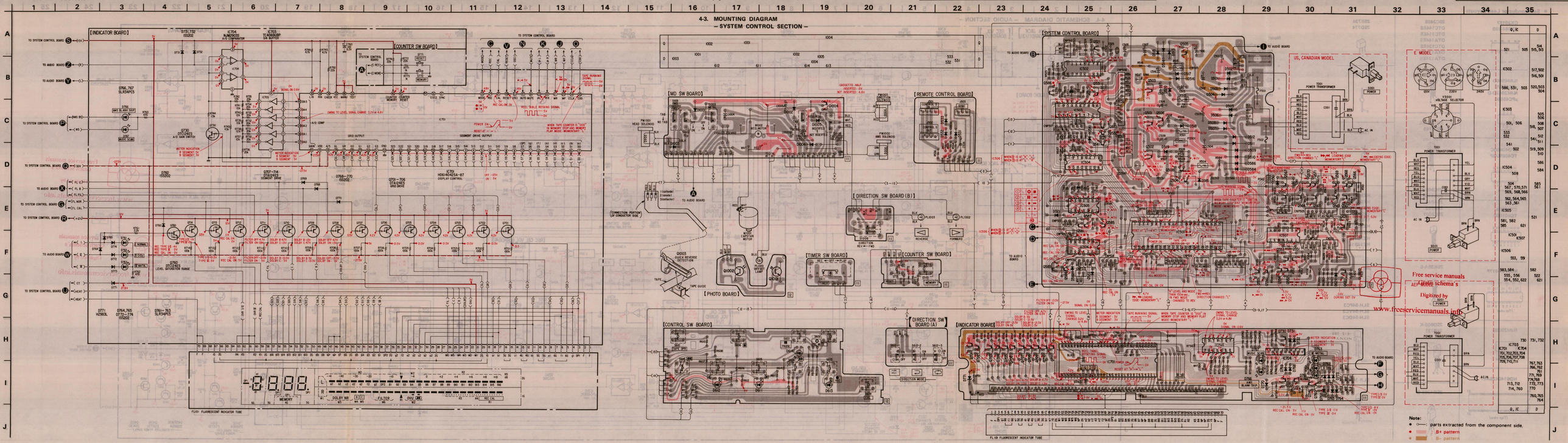

Note:
- parts extracted from the component side.
- B+ patterri
- B- patterri

TC-K501R/K501ES TC-K501R/K501ES
TC-K501R/K501ES TC-K501R/K501ES

5/18/15

- Semiconductor Lead Layouts

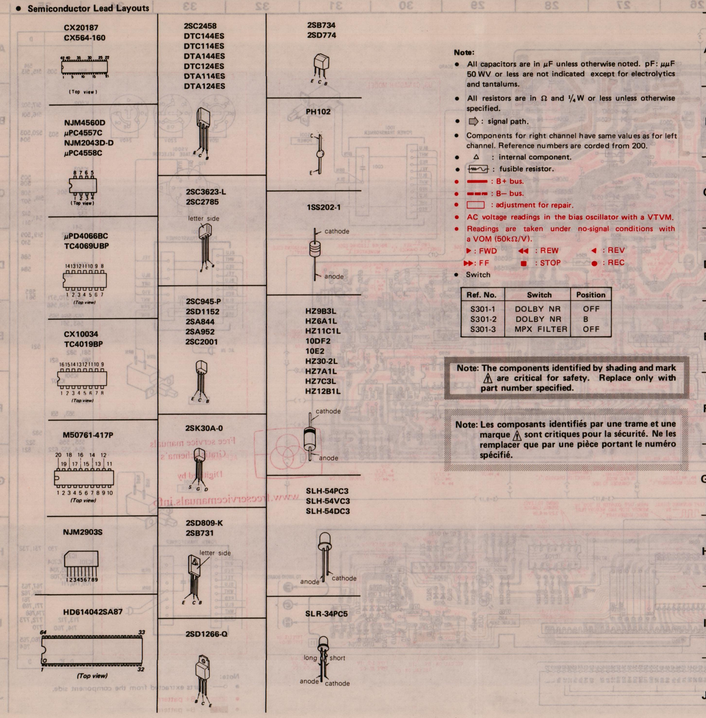

Note:

- All capacitors are in μF unless otherwise noted. pF: μμF 50 WV or less are not indicated except for electrolytics and tantalums.
- All resistors are in Ω and ¼W or less unless otherwise specified.
- ▷ : signal path.
- Components for right channel have same values as for left channel. Reference numbers are corded from 200.
- △ : internal component.
- ⊸ : fusible resistor.
- ▬ : B+ bus.
- ▬ : B− bus.
- ▭ : adjustment for repair.
- AC voltage readings in the bias oscillator with a VTVM.
- Readings are taken under no-signal conditions with a VOM (50kΩ/V).
- ▶ : FWD ◀◀ : REW ◀ : REV
- ▶▶ : FF ■ : STOP ● : REC
- Switch

Ref. No.	Switch	Position
S301-1	DOLBY NR	OFF
S301-2	DOLBY NR	B
S301-3	MPX FILTER	OFF

Note: The components identified by shading and mark ⚠ are critical for safety. Replace only with part number specified.

Note: Les composants identifiés par une trame et une marque ⚠ sont critiques pour la sécurité. Ne les remplacer que par une pièce portant le numéro spécifié.

4-4. SCHEMATIC DIAGRAM – AUDIO SECTION –

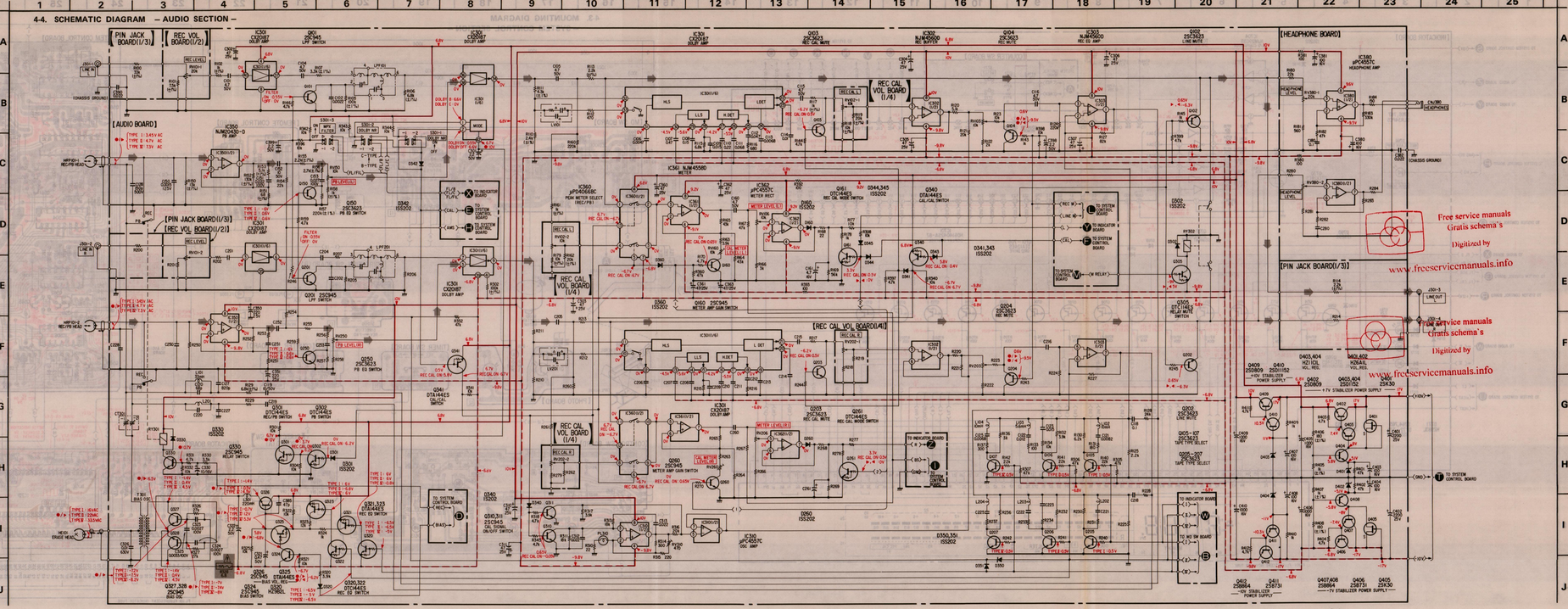

Free service manuals
Gratis schema's
Digitized by
www.freeservicemanuals.info

4-5. MOUNTING DIAGRAM – AUDIO SECTION –

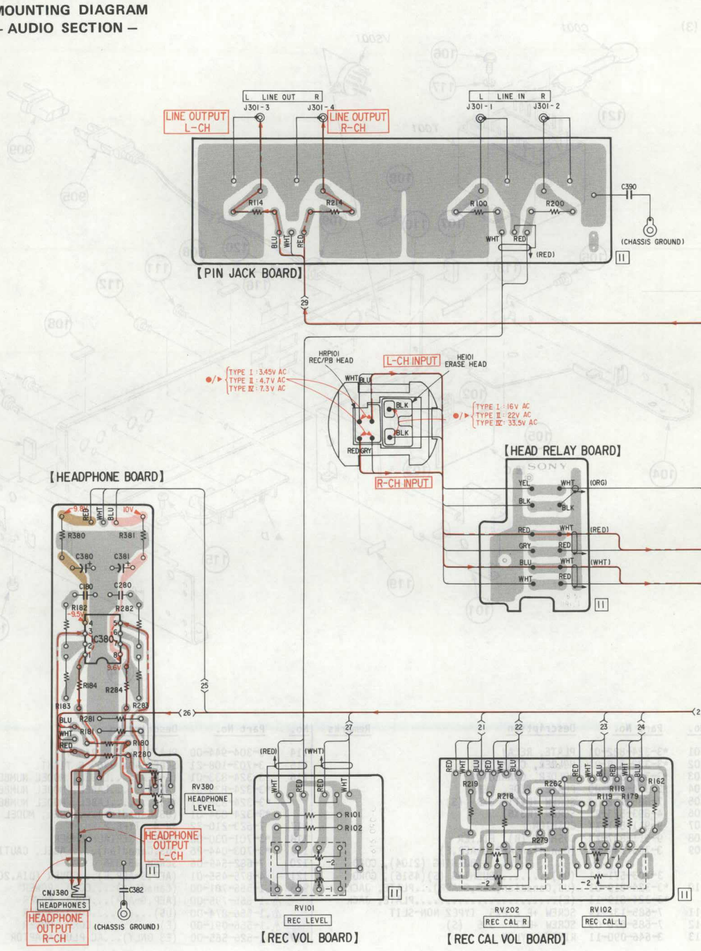

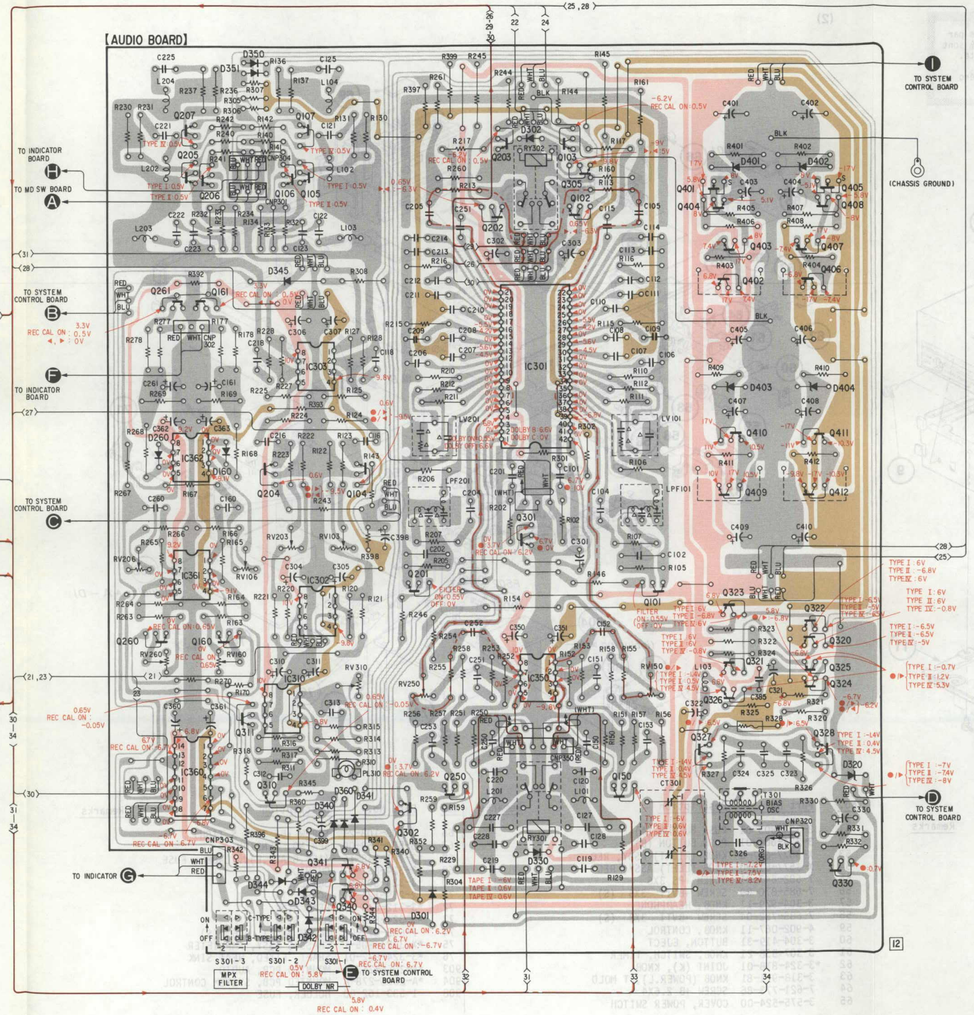

Q, IC	D
	350
	351
207 107	
203 103	302
205 206	
106 105 305	401
	402
401 405	
404 408	
202 102	
403 407	
402 406	345
261 161	
IC303 IC301	
	403
	404
410 411	
IC362	260
	160
204 104	
409 412	
301	
IC380	
IC361	
IC302 201	
101	
323	
322	
320	
260 160	
	325
IC350	321
	324
	326
311 IC310	
327 328	
IC360	
	320
310 250 150	
	341
302	360
	340
341	330
330	
340	
	344
	343 301
	342
Q, IC	D

- Color code of sleeving over the end of the jacket.

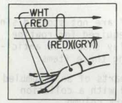

- ○— : parts extracted from the component side.
- : signal path
- : L-CH signal path
- : R-CH signal path
- : B+ pattern
- : B- pattern

SECTION 5
EXPLODED VIEW AND PARTS LIST

NOTE:
- The mechanical parts with no reference number in the exploded views are not supplied.
- Items marked " ★ " are not stocked since they are seldom required for routine service. Some delay should be anticipated when ordering these items.
- The construction parts of an assembled part are indicated with a collation number in the remark column.

The components identified by shading and mark ⚠ are critical for safety. Replace only with part number specified.	Les composants identifiés par une trame et une marque ⚠ sont critiques pour la sécurité. Ne les remplacer que par une pièce portant le numéro spécifié.

(1)

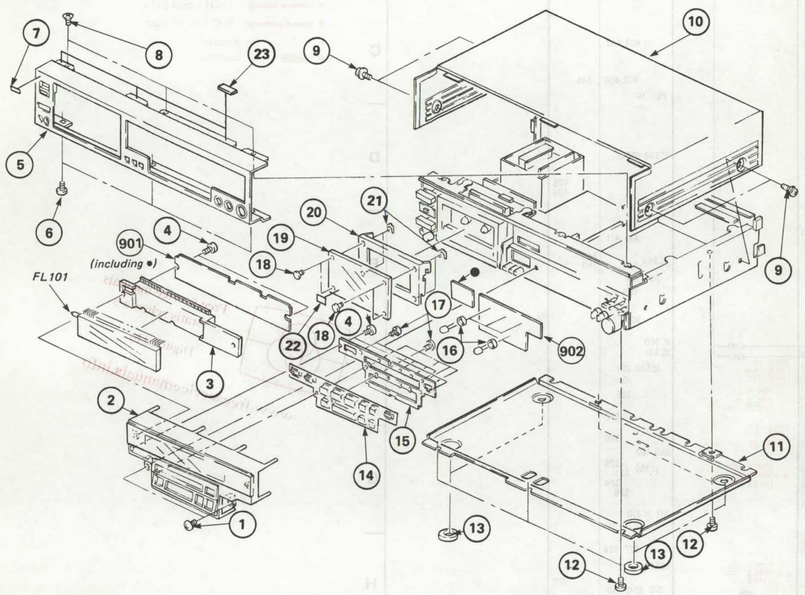

No.	Part No.	Description	Remarks
1	7-685-752-04	SCREW +BVTT 3X8 (S)	
2	X-3324-803-1	ESCUTCHEON ASSY	
3	*3-324-823-01	HOLDER, FL TUBE	
4	7-685-132-19	SCREW +P 2.6X5 TYPE2 NON-SLIT	
5	A-2310-283-A	(E).....PANEL ASSY, FRONT	
	A-2310-300-A	(US,Canadian,AEP,G-AEP) ...PANEL ASSY, FRONT	
6	7-685-870-09	SCREW +BVTT 3X5 (S)	
7	3-304-974-01	EMBLEM, SONY	
8	7-682-247-04	SCREW +K 3X6	
9	4-820-330-31	SCREW, BW, PLUS MINUS	
10	3-575-539-41	CASE	
11	*3-575-538-21	PLATE, BUTTOM	
12	3-703-108-21	SCREW +BV 3X6, S TIGHT	
13	3-576-731-00	FELT (H)	
14	X-3324-802-1	BUTTON ASSY, CONTROL	
15	*3-324-825-01	RETAINER, SPRING	
16	*4-901-657-11	SPACER (A), LED	
17	7-685-531-14	SCREW +BTP 2.6X4 TYPE2 N-S	
18	3-324-814-01	PIN, STOPPER, CASSETTE WINDOW	
19	3-324-808-01	WINDOW, CASSETTE	
20	3-324-826-01	LID, CASSETTE	
21	3-324-813-01	SPRING	
22	3-703-710-41	STICKER, SONY SYMBOL (12)	
23	9-911-837-XX	CUSHION (B), FILTER	
901	*1-615-088-11	PC BOARD, INDICATOR	
902	*1-615-089-11	PC BOARD, CONTROL SW	

(2)

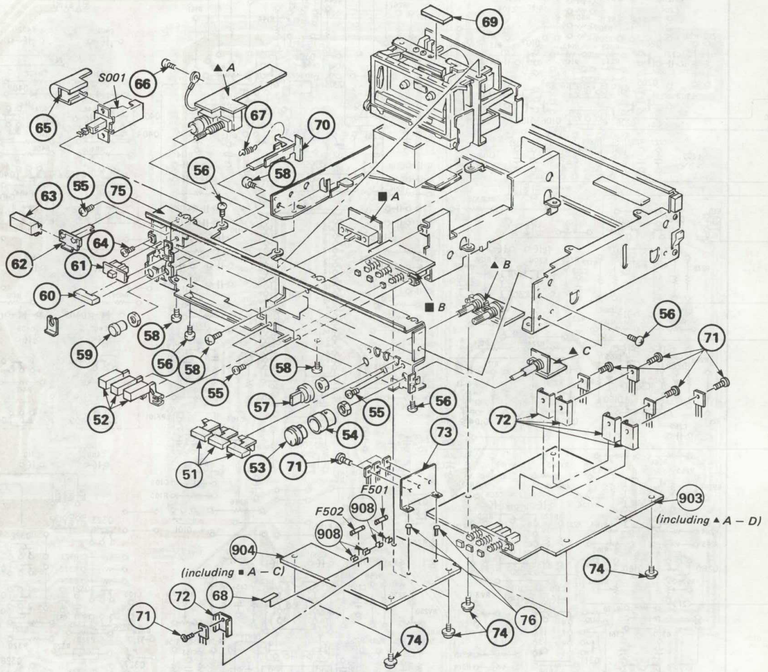

No.	Part No.	Description	Remarks
51	3-324-803-01	PUSH BUTTON (A)	
52	3-324-804-01	PUSH BUTTON (B)	
53	X-3577-617-0	KNOB (RIGHT) ASSY, REC	
54	X-3577-618-0	KNOB (LEFT) ASSY, REC	
55	7-682-647-01	SCREW +PS 3X6	
56	7-685-870-09	SCREW +BVTT 3X5 (S)	
57	3-304-929-11	KNOB, HEADPHONE	
58	7-685-752-04	SCREW +BVTT 3X8 (S)	
59	4-902-067-11	KNOB, CONTROL	
60	3-304-419-31	BUTTON, EJECT	
61	3-307-538-21	KNOB, SWITCH, TIMER	
62	*3-324-818-01	JOINT (K), KNOB	
63	3-318-911-81	KNOB (POWER.L), T MOLD	
64	7-621-773-86	SCREW +B 2.6X4	
65	3-575-524-00	COVER, POWER SWITCH	
66	3-703-108-21	SCREW +BV 3X6, S TIGHT	
67	3-534-558-00	SPRING, TENSION	
68	*3-701-948-16	(AEP,G-AEP,E)...LABEL, FUSE	
69	*3-324-837-01	CUSHION	
70	*3-324-802-01	SLIDER, EJECT	
71	2-259-121-00	SCREW, TR	
72	*3-312-615-11	HEAT SINK	
73	*3-324-805-01	HEAT SINK	
74	7-685-871-01	SCREW +BVTT 3X6 (S)	
75	*X-3324-805-1	CHASSIS ASSY, AMPLIFIER	
76	*3-324-832-01	SHAFT, FIXED, HEAT SINK	
903	*A-2056-263-A	MOUNTED PCB, AUDIO	
904	*A-2056-278-A	MOUNTED PCB, SYSTEM CONTROL	
908	1-533-162-00	HOLDER, FUSE	

(3)

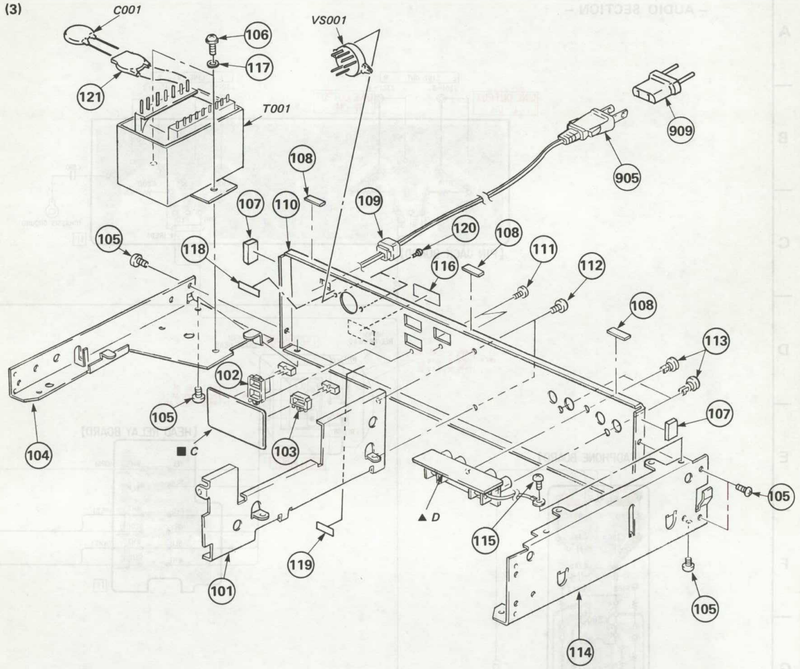

No.	Part No.	Description	Remarks
101	*3-324-822-01	PLATE, RELAY	
102	*3-322-818-01	HOLDER, CONNECTOR	
103	*3-322-819-01	HOLDER, CONNECTOR	
104	*3-304-423-00	PLATE, SIDE, LEFT	
105	7-685-752-04	SCREW +BVTT 3X8 (S)	
106	4-893-523-21	SCREW (M3X6)	
107	9-911-841-XX	CUSHION	
108	9-911-837-XX	CUSHION (B), FILTER	
109	3-703-244-00	(Canadian,AEP,G-AEP,E) .....BUSHING (2104), CORD	
	3-703-571-11	(US).....BUSHING (S)(4516), CORD	
110	*3-324-819-01	(US,Canadian,AEP,G-AEP)...PLATE, JACK	
	*3-324-819-11	(E).....PLATE, JACK	
111	7-685-132-19	SCREW +P 2.6X5 TYPE2 NON-SLIT	
112	7-685-870-09	SCREW +BVTT 3X5 (S)	
113	3-646-090-11	RIVET, NYLON	
114	*3-304-944-00	PLATE, SIDE, RIGHT	
115	3-703-108-21	SCREW +BV 3X6, S TIGHT	
116	*3-324-833-01	(G-AEP).....LABEL, MODEL NUMBER (AE4)	
	*3-324-835-01	(AEP).....LABEL, MODEL NUMBER (AE2)	
	*3-324-836-01	(E).....LABEL, MODEL NUMBER (E2/3)	
	*3-324-834-01	(US,Canadian)...LABEL, MODEL NUMBER (U,C)	
117	7-623-210-22	SW 4, TYPE 2	
118	*3-701-030-00	LABEL, SERIAL NUMBER	
119	*3-703-044-26	(US,Canadian)....LABEL, CAUTION	
120	7-682-549-06	SCREW +B 3X6	
121	4-875-455-01	(AEP,G-AEP,E)...COVER (DIA.20), CAPACITOR	
905	⚠.1-555-701-00	(Canadian)....CORD, POWER	
	⚠.1-555-795-00	(AEP,G-AEP)...CORD, POWER	
	⚠.1-556-874-00	(US).....CORD, POWER	
	⚠.1-556-091-00	(E).....CORD, POWER	
909	⚠.1-526-565-00	(E3 ONLY)...AC PLUG ADAPTOR	

The components identified by shading and mark ⚠ are critical for safety. Replace only with part number specified.	Les composants identifiés par une trame et une marque ⚠ sont critiques pour la sécurité. Ne les remplacer que par une pièce portant le numéro spécifié.

(4)

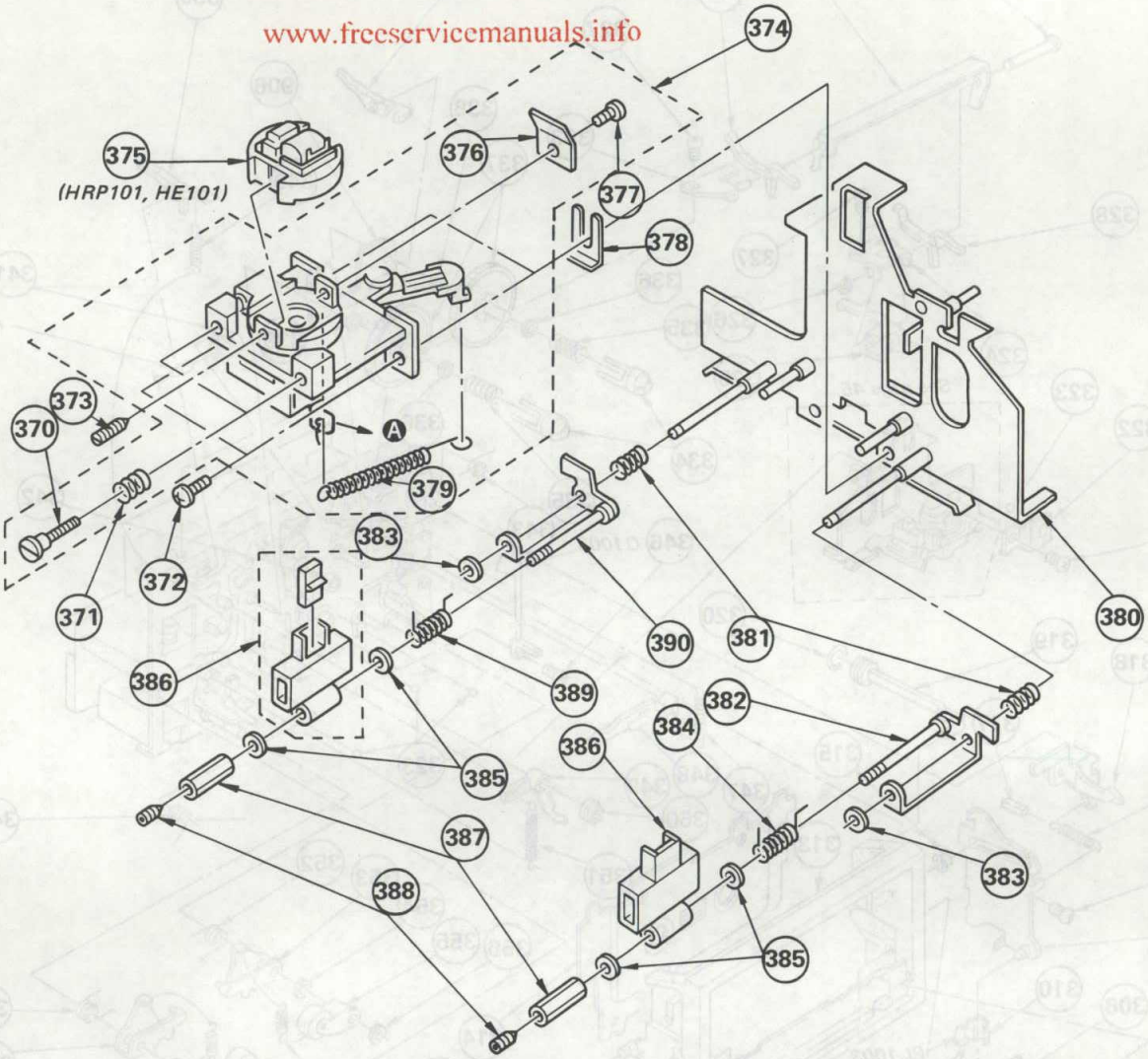

No.	Part No.	Description	Remarks
370	3-306-227-01	SCREW, AZIMUTH ADJUCTMENT	
371	3-307-460-00	SPRING, COMPRESSION	
372	7-627-556-58	SCREW +P 2.6X5	
373	7-621-714-36	SET-SCREW, SLOT 1.7X3FLAT POINT	
374	X-3575-367-0	HEAD BLOCK ASSY	
375	A-2108-109-A	FITTING BLOCK ASSY, HEAD	
376	3-306-228-01	SPRING	
377	7-627-552-28	SCREW, PRECISION +P 1.7X2	
378	3-307-477-01	SEAM (A), HEAD ADJUSTMENT	
	3-307-477-11	SEAM (A), HEAD ADJUSTMENT	
	3-307-477-21	SEAM (A), HEAD ADJUSTMENT	
	3-307-477-31	SEAM (A), HEAD ADJUSTMENT	
	3-307-477-41	SEAM (A), HEAD ADJUSTMENT	

No.	Part No.	Description	Remarks
379	3-306-258-01	SPRING, TENSION	
380	X-3575-369-0	CHASSIS (RIGHT) ASSY, HEAD	
381	3-555-122-00	SPRING, COMPRESSION	
382	*X-3575-366-0	LEVER (RIGHT) ASSY, GUIDE	
383	3-307-394-00	RETAINER (B), THRUST	
384	3-306-250-00	SPRING (RIGHT)	
385	7-688-001-01	W 2, SMALL	
386	X-3575-394-1	TAPE GUIDE ASSY	
387	3-306-288-00	NUT, ADJUSTMENT, TAPE GUIDE	
388	7-621-732-08	SET-SCT, HEX. 2X3 FLAT POINT	
389	3-306-249-00	SPRING (LEFT)	
390	*X-3575-365-0	LEVER (LEFT) ASSY, GUIDE	

(5)

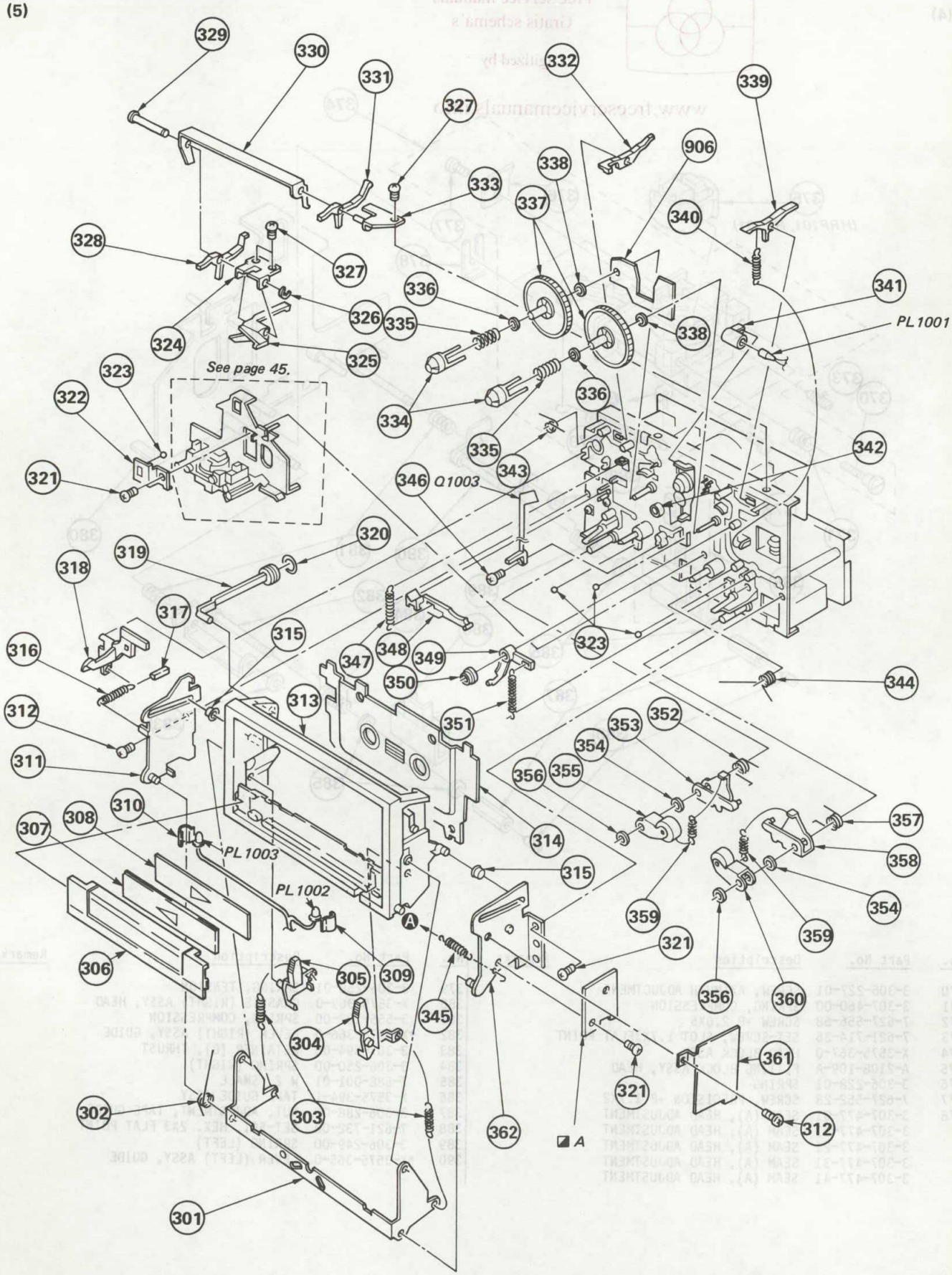

No.	Part No.	Description	Remarks
301	*3-306-285-00	LEVER, HOLDER FULCRUM	
302	3-575-356-00	SPRING	
303	3-578-390-00	SPRING, TENSION	
304	3-306-284-00	RETAINER (RIGHT), CASSETTE	
305	3-306-283-00	RETAINER (LEFT), CASSETTE	
306	3-318-425-01	HOLDER, DIRECTION	
307	3-318-423-01	PLATE (REVERSE), DIRECTION	
308	3-318-424-01	PLATE (FORWARD), DIRECTION	
309	*3-318-429-01	REFLECTOR (RIGHT), LAMP	
310	*3-318-428-01	REFLECTOR (LEFT), LAMP	
311	*X-3575-338-0	PLATE (LEFT) ASSY, FULCRUM	
312	7-685-860-09	SCREW +BVTT 2.6X4 (S)	
313	3-318-426-01	HOLDER, CASSETTE	
314	X-3575-393-1	RETAINER ASSY, CASSETTE	
315	3-575-348-00	ROLLER, GUIDE, THREADING	
316	3-632-261-00	SPRING	
317	9-911-815-02	CUSHION	
318	3-575-448-00	LEVER, LOCK	
319	3-575-459-00	PISTON	
320	3-312-441-00	RING, PISTON	
321	7-685-791-04	SCREW +BVTT 2.6X5 (S)	
322	*3-306-225-00	SPRING	
323	7-671-113-02	STEAL, BALL 3	
324	*3-575-440-00	BRACKET, LEVER, DETECTION	
325	3-575-446-00	LEVER, DETECTION, METAL	
326	7-624-104-04	STOP RING 2.0, TYPE -E	
327	7-682-546-04	SCREW +BVTT 3X5 (S)	
328	3-575-438-00	LEVER, DETECTION	
329	*3-306-281-00	SHAFT, DETECTION LEVER	
330	*3-306-279-00	LEVER, ERASING PROTECTION	
331	*3-306-282-00	LEVER, REC DETECTION, REVERSE	
332	3-575-449-00	LEVER, DETECTION, REC	
333	*X-3575-364-0	BRACKET ASSY, LEVER	
334	3-306-257-00	CLAW, REEL TABLE	
335	3-575-365-00	SPRING, COMPRESSION	
336	3-558-708-11	WASHER, STOPPER	
337	3-575-353-11	TABLE, REEL	
338	3-701-439-21	WASHER, 3.0	
339	3-575-331-00	LEVER, DETECTION, HALF	
340	3-575-358-00	SPRING, TENSION	
341	3-575-328-00	HOLDER, LAMP	
342	3-306-296-01	RUBBER, STOPPER	
343	3-318-408-01	SPRING	
344	3-575-351-00	SPRING	
345	3-306-289-01	SPRING, TENSION	
346	7-685-104-19	SCREW +P 2X6 TYPE2 NON-SLIT	
347	3-575-359-00	SPRING, TENSION	
348	X-3575-310-0	LEVER ASSY, TENSION, BACK	
349	X-3575-370-0	LEVER (R) ASSY, BACK TENSION	
350	3-307-367-00	BUSHING, SELECT LEVER	
351	3-534-027-00	SPRING, TENSION	
352	3-306-239-00	SPRING (LEFT)	
353	*X-3575-362-0	PLATE (LEFT) ASSY, LIMITER	
354	3-701-439-11	WASHER, 3.0	
355	X-3575-361-0	PINCH LEVER (LEFT) ASSY	
356	3-558-708-21	WASHER, STOPPER	
357	3-306-240-00	SPRING (RIGHT)	
358	*X-3575-363-0	PLATE (RIGHT) ASSY, LIMITER	
359	3-306-295-01	SPRING, TENSION	
360	X-3575-360-0	PINCH LEVER (RIGHT) ASSY	
361	*3-318-427-01	PLATE, SHIELD, LEAD, HEAD	
362	*X-3575-339-0	PLATE (RIGHT) ASSY, FULCRUM	
906	*1-603-823-00	PC BOARD, PHOTO	

(6)

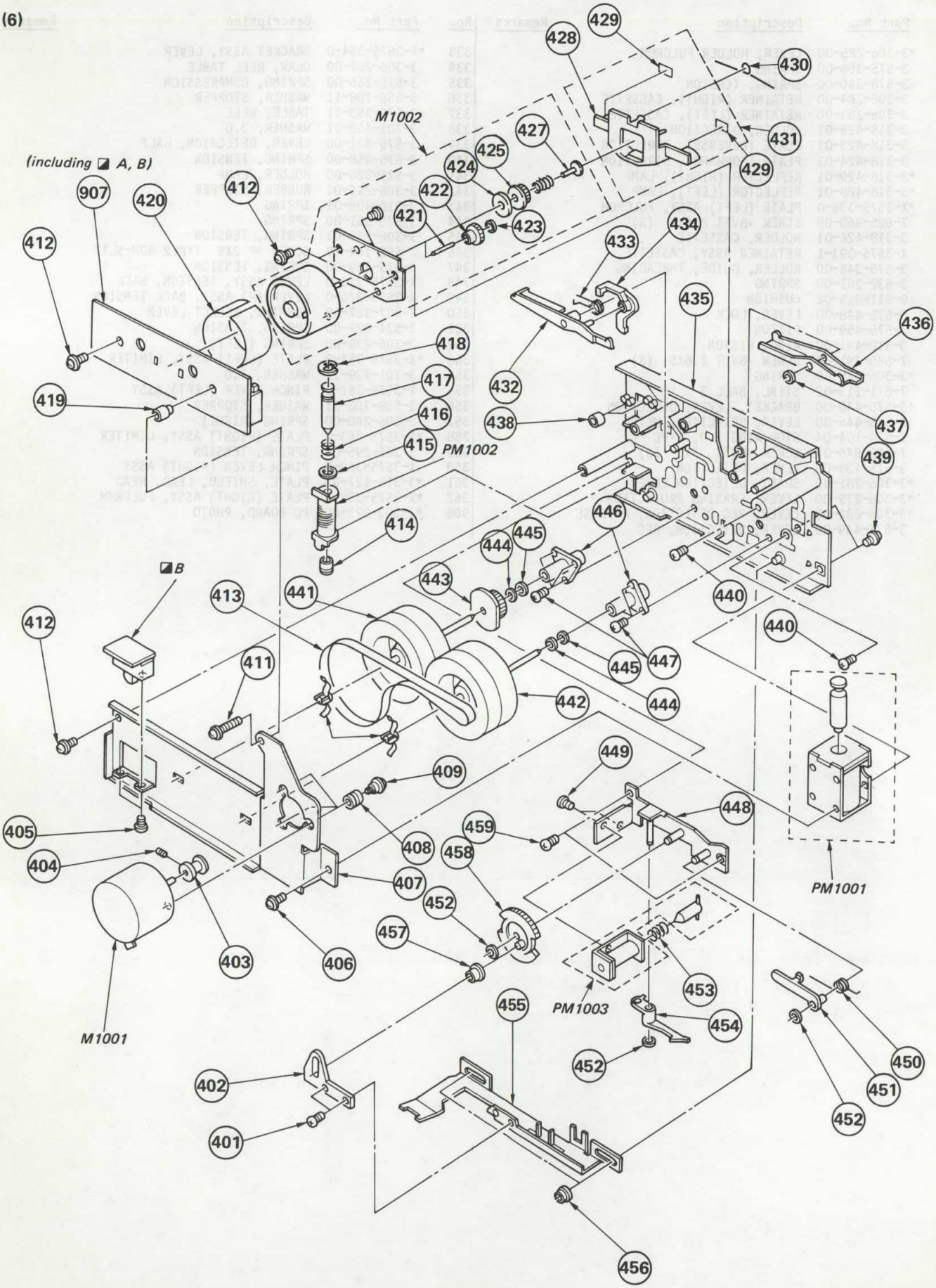

No.	Part No.	Description	Remarks
401	7-621-772-05	SCREW +B 2X3	
402	3-306-251-00	PLATE (A), SLIDE	
403	3-306-262-00	PULLEY (R), MOTOR	
404	7-621-732-08	SET-SCT, HEX. 2X3 FLAT POINT	
405	7-621-775-00	SCREW +B 2.6X3	
406	7-682-947-01	SCREW +PSW 3X6	
407	*3-306-270-00	RETAINER (RIGHT), THRUST	
408	3-570-118-00	CUSHION, MOTOR	
409	3-570-027-00	SCREW, MOTOR	
410	3-575-321-00	RETAINER, THRUST, CAPSTAN	
411	7-687-250-21	SCREW, TOTSU PTPWH 3X16, TYPE2	
412	7-687-246-21	SCREW, TOTSU PTPWH 3X8, TYPE2	
413	3-561-850-11	BELT, CAPSTAN	
414	3-575-416-11	ARBOR, FIXED	
415	3-701-444-11	WASHER, 6	
416	3-575-414-00	SPRING, COMPRESSION	
417	3-575-415-11	ARBOR, MOVABLE	
418	7-624-109-04	STOP RING 5.0, TYPE -E	
419	3-306-259-00	SPACER, PC BOARD	
420	3-306-261-00	PLATE, SHIELD, MOTOR	
421	3-575-304-00	SHAFT, GEAR, FR	
422	3-575-332-00	GEAR, FR	
423	3-558-708-01	WASHER, STOPPER	
424	3-564-027-11	FELT, LIMITER	
425	3-575-324-00	GEAR, LIMITER	
427	3-575-327-00	STOPPER	
428	3-575-491-00	PLATE, BRAKE	
429	3-575-469-00	SHOE, BRAKE	
430	3-575-345-00	SPRING	
431	*X-3575-342-0	PLATE ASSY, BRAKE	
432	3-575-460-00	LEVER, SELECT TUNE	
433	3-575-458-00	SPRING	
434	3-575-318-00	LEVER, LOCK, TUNING	
435	*X-3575-368-0	CHASSIS ASSY, MECHANICAL	
436	*3-306-260-00	LEVER, FWD	
437	3-558-708-21	WASHER, STOPPER	
438	3-538-051-00	RUBBER, BRAKE	
439	7-682-949-01	SCREW +PSW 3X10	
440	7-685-104-19	SCREW +P 2X6 TYPE2 NON-SLIT	
441	X-3575-396-1	FLYWHEEL (RIGHT) ASSY	
442	X-3575-395-1	FLYWHEEL (LEFT) ASSY	
443	3-306-224-00	GEAR, PINION	
444	3-701-438-11	WASHER, 2.5	
445	3-307-482-00	WASHER, LUMILER	
446	X-3575-303-0	METAL ASSY, CAPSTAN	
447	7-685-791-04	SCREW +BVTT 2.6X5 (S)	
448	*X-3575-358-0	BRACKET ASSY, SOLENOID	
449	7-621-775-10	SCREW +B 2.6X4	
450	3-306-237-00	SPRING	
451	3-306-223-00	LEVER (B), TRIGGER	
452	3-307-394-00	RETAINER (B), THRUST	
453	3-571-850-11	SPRING, COMPRESSION	
454	3-306-253-00	LEVER (A), TRIGGER	
455	*3-306-271-00	SLIDER (A), SELECTION	
456	3-307-367-00	BUSHING, SELECT LEVER	
457	3-564-933-00	BOSS, FITTING, SPRING	
458	3-306-287-00	GEAR, TRIGGER	
459	7-685-860-09	SCREW +BVTT 2.6X4 (S)	
907	*1-615-091-11	PC BOARD, MD SWITCH	

NOTE:
- Items marked " ★ " are not stocked since they are seldom required for routine service. Some delay should be anticipated when ordering these items.
- If there are two or more same circuitsin a set such as a stereophonic machine, only typical circuit parts may be indicated and capacitors and resistors in other same circuits may be omitted.

CAPACITORS:
MF:μF, PF:μμF.

RESISTORS
- All resistors are in ohms.
- F : nonflammable

COILS
- MMH : mH, UH : μH

SEMICONDUCTORS
In each case, U : μ, for example:
UA...: μA..., UPA...: μPA..., UPC...: μPC, UPD...: μPD...

The components identified by shading and mark ⚠ are critical for safety. Replace only with part number specified.

Les composants identifiés par une trame et une marque ⚠ sont critiques pour la sécurité. Ne les remplacer que par une pièce portant le numéro spécifié.

ELECTRICAL PARTS

Ref.No.	Part No.	Description			
901	*1-615-088-11	PC BOARD, INDICATOR			
902	*1-615-089-11	PC BOARD, CONTROL SW			
903	*A-2056-263-A	MOUNTED PCB, AUDIO			
904	*A-2056-278-A	MOUNTED PCB, SYSTEM CONTROL			
905	⚠.1-555-701-00	(Canadian)....CORD, POWER			
	⚠.1-555-795-00	(AEP,G-AEP)...CORD, POWER			
	⚠.1-556-874-00	(US).....CORD, POWER			
	⚠.1-556-091-00	(E).....CORD, POWER			
906	*1-603-823-00	PC BOARD, PHOTO			
907	*1-615-091-11	PC BOARD, MD SWITCH			
908	1-533-162-00	HOLDER, FUSE			
909	⚠.1-526-565-00	(E3 ONLY)....AC PLUG ADAPTOR			
C001	⚠.1-161-744-00	CAP, CERAMIC	10000PF	FZ	400V
C101	1-124-185-00	ELECT	4.7MF	20%	50V
C102	1-161-375-00	CERAMIC	0.0022MF	20%	50V
C104	1-124-185-00	ELECT	4.7MF	20%	50V
C105	1-124-185-00	ELECT	4.7MF	20%	50V
C106	1-110-203-00	MYLAR	0.0047MF	5%	50V
C107	1-136-173-00	FILM	0.47MF	5%	50V
C108	1-136-167-00	FILM	0.15MF	5%	50V
C109	1-136-155-00	FILM	0.015MF	5%	50V
C110	1-136-169-00	FILM	0.22MF	5%	50V
C111	1-136-163-00	FILM	0.068MF	5%	50V
C112	1-136-161-00	FILM	0.047MF	5%	50V
C113	1-110-205-00	MYLAR	0.0068MF	5%	50V
C114	1-136-153-00	FILM	0.01MF	5%	50V
C115	1-124-185-00	ELECT	4.7MF	20%	50V
C116	1-124-185-00	ELECT	4.7MF	20%	50V
C118	1-136-165-00	FILM	0.1MF	5%	50V
C119	1-124-186-00	ELECT	10MF	20%	50V
C120	1-107-036-00	MICA	68PF	5%	500V
C121	1-110-206-00	MYLAR	0.0082MF	5%	50V
C122	1-136-154-00	FILM	0.012MF	5%	50V
C123	1-136-155-00	FILM	0.015MF	5%	50V
C125	1-110-205-00	MYLAR	0.0068MF	5%	50V
C127	1-161-322-00	CERAMIC	820PF	10%	50V
C128	1-107-173-00	MICA	150PF	5%	500V
C150	1-104-228-00	POLYSTYRENE	0.0015MF	5%	125V
C151	1-130-305-00	FILM	0.022MF	5%	100V
C152	1-124-186-00	ELECT	10MF	20%	50V
C153	1-130-307-00	FILM	0.027MF	5%	100V
C160	1-124-185-00	ELECT	4.7MF	20%	50V
C161	1-131-369-00	TANTALUM	4.7MF	20%	16V
C180	1-136-165-00	FILM	0.1MF	5%	50V
C301	1-123-381-00	ELECT	2.2MF	20%	50V

ELECTRICAL PARTS

Ref.No.	Part No.	Description			
C302	1-123-332-00	ELECT	47MF	20%	25V
C303	1-123-332-00	ELECT	47MF	20%	25V
C304	1-123-332-00	ELECT	47MF	20%	25V
C305	1-123-332-00	ELECT	47MF	20%	25V
C306	1-123-332-00	ELECT	47MF	20%	25V
C307	1-123-332-00	ELECT	47MF	20%	25V
C310	1-123-332-00	ELECT	47MF	20%	25V
C311	1-123-332-00	ELECT	47MF	20%	25V
C312	1-136-157-00	FILM	0.022MF	5%	50V
C313	1-136-157-00	FILM	0.022MF	5%	50V
C321	1-123-379-00	ELECT	0.47MF	20%	50V
C322	1-123-381-00	ELECT	2.2MF	20%	50V
C323	1-130-023-00	FILM	0.0027MF	5%	100V
C324	1-130-023-00	FILM	0.0027MF	5%	100V
C325	1-130-285-00	FILM	0.0033MF	5%	100V
C326	1-129-714-00	FILM	0.01MF	10%	630V
C330	1-123-356-00	ELECT	10MF	20%	16V
C350	1-123-334-00	ELECT	220MF	20%	25V
C351	1-123-334-00	ELECT	220MF	20%	25V
C360	1-123-332-00	ELECT	47MF	20%	25V
C361	1-123-332-00	ELECT	47MF	20%	25V
C362	1-123-332-00	ELECT	47MF	20%	25V
C363	1-123-332-00	ELECT	47MF	20%	25V
C380	1-123-333-00	ELECT	100MF	20%	16V
C381	1-123-333-00	ELECT	100MF	20%	16V
C382	1-161-494-00	CERAMIC	0.022MF	30%	25V
C385	1-162-215-31	CERAMIC	47PF	5%	50V
C390	1-161-494-00	CERAMIC	0.022MF	30%	25V
C398	1-123-381-00	ELECT	2.2MF	20%	50V
C399	1-123-381-00	ELECT	2.2MF	20%	50V
C401	1-123-338-00	ELECT	2200MF	20%	25V
C402	1-123-338-00	ELECT	2200MF	20%	25V
C403	1-123-333-00	ELECT	100MF	20%	16V
C404	1-123-333-00	ELECT	100MF	20%	16V
C405	1-124-077-51	ELECT	1000MF	20%	16V
C406	1-124-077-51	ELECT	1000MF	20%	16V
C407	1-123-333-00	ELECT	100MF	20%	16V
C408	1-123-333-00	ELECT	100MF	20%	16V
C409	1-124-077-51	ELECT	1000MF	20%	16V
C410	1-124-077-51	ELECT	1000MF	20%	16V
C501	1-123-338-00	ELECT	2200MF	20%	25V
C502	1-123-338-00	ELECT	2200MF	20%	25V
C503	1-123-364-00	ELECT	1000MF	20%	50V
C504	1-123-326-00	ELECT	3300MF	20%	16V
C505	1-123-360-00	ELECT	100MF	20%	50V

ELECTRICAL PARTS

Ref.No.	Part No.	Description			
C506	1-123-360-00	ELECT	100MF	20%	50V
C507	1-123-360-00	ELECT	100MF	20%	50V
C508	1-123-369-00	ELECT	4.7MF	20%	50V
C509	1-123-298-00	ELECT	470MF	20%	6.3V
C511	1-123-310-00	ELECT	470MF	20%	10V
C512	1-123-309-00	ELECT	330MF	20%	10V
C513	1-123-369-00	ELECT	4.7MF	20%	50V
C514	1-123-323-00	ELECT	470MF	20%	16V
C515	1-123-369-00	ELECT	4.7MF	20%	50V
C516	1-123-360-00	ELECT	100MF	20%	50V
C521	1-162-019-00	CERAMIC	18PF	5%	50V
C522	1-162-019-00	CERAMIC	18PF	5%	50V
C523	1-136-161-00	FILM	0.047MF	5%	50V
C524	1-136-165-00	FILM	0.1MF	5%	50V
C525	1-123-380-00	ELECT	1MF	20%	50V
C526	1-136-167-00	FILM	0.15MF	5%	50V
C531	1-123-307-00	ELECT	100MF	20%	6.3V
C532	1-162-100-00	CERAMIC	150PF	10%	50V
C533	1-162-100-00	CERAMIC	150PF	10%	50V
C534	1-162-110-00	CERAMIC	0.001MF	10%	50V
C561	1-123-369-00	ELECT	4.7MF	20%	50V
C582	1-123-380-00	ELECT	1MF	20%	50V
C583	1-162-056-00	CERAMIC	33PF	5%	50V
C584	1-162-056-00	CERAMIC	33PF	5%	50V
C585	1-123-307-00	ELECT	100MF	20%	6.3V
C586	1-123-382-00	ELECT	3.3MF	20%	50V
C591	1-161-494-00	CERAMIC	0.022MF	30%	25V
C592	1-123-380-00	ELECT	1MF	20%	50V
C621	1-123-332-00	ELECT	47MF	20%	16V
C622	1-123-318-00	ELECT	33MF	20%	16V
C760	1-123-661-00	ELECT	100MF	20%	6.3V
C1001	1-161-327-00	CERAMIC	0.0033MF	30%	50V
C1002	1-161-327-00	CERAMIC	0.0033MF	30%	50V
C1003	1-123-332-00	ELECT	47MF	20%	16V
C1004	1-123-332-00	ELECT	47MF	20%	16V
C1005	1-123-307-00	ELECT	100MF	20%	10V
CNJ380	1-507-659-00	JACK			
CNP301*	1-564-506-11	PLUG, CONNECTOR 3P			
CNP302*	1-564-506-11	PLUG, CONNECTOR 3P			
CNP303*	1-564-506-11	PLUG, CONNECTOR 3P			
CNP304*	1-564-506-11	PLUG, CONNECTOR 3P			
CNP320*	1-560-708-00	PIN, CONNECTOR 2P			
CNP350*	1-560-605-00	PIN, CONNECTOR 6P			
CNP501*	1-564-506-11	PLUG, CONNECTOR 3P			
CNP502*	1-564-506-11	PLUG, CONNECTOR 3P			
CNP503*	1-564-507-11	PLUG, CONNECTOR 4P			
CNP504*	1-564-507-31	PLUG, CONNECTOR 4P			
CNP505*	1-564-510-11	PLUG, CONNECTOR 7P			
CNP506*	1-564-507-21	PLUG, CONNECTOR 4P			
CNP507*	1-564-508-11	PLUG, CONNECTOR 5P			
CNP508*	1-564-509-11	PLUG, CONNECTOR 6P			
CNP509*	1-564-511-11	PLUG, CONNECTOR 8P			
CNP510*	1-564-509-11	PLUG, CONNECTOR 6P			
CNP511*	1-564-506-11	PLUG, CONNECTOR 3P			
CNP512*	1-564-506-11	PLUG, CONNECTOR 3P			

ELECTRICAL PARTS

Ref.No.	Part No.	Description
CNP513*	1-564-506-11	PLUG, CONNECTOR 3P
CNP514*	1-564-505-21	PLUG, CONNECTOR 2P
CNP515*	1-564-505-11	PLUG, CONNECTOR 2P
CNP516*	1-564-508-11	PLUG, CONNECTOR 5P
CNP517*	1-564-510-21	PLUG, CONNECTOR 7P
CNP518*	1-564-507-41	PLUG, CONNECTOR 4P
CT301	1-141-225-00	CAP, TUNING, TRIMMER
D160	8-719-107-94	DIODE 1SS202-1
D301	8-719-107-94	DIODE 1SS202-1
D302	8-719-107-94	DIODE 1SS202-1
D320	8-719-910-96	DIODE HZ9B3L
D330	8-719-107-94	DIODE 1SS202-1
D340	8-719-107-94	DIODE 1SS202-1
D341	8-719-107-94	DIODE 1SS202-1
D342	8-719-107-94	DIODE 1SS202-1
D343	8-719-107-94	DIODE 1SS202-1
D344	8-719-107-94	DIODE 1SS202-1
D345	8-719-107-94	DIODE 1SS202-1
D350	8-719-107-94	DIODE 1SS202-1
D351	8-719-107-94	DIODE 1SS202-1
D360	8-719-107-94	DIODE 1SS202-1
D401	8-719-910-61	DIODE HZ6A1L
D402	8-719-910-61	DIODE HZ6A1L
D403	8-719-910-17	DIODE HZ11C1L
D404	8-719-910-17	DIODE HZ11C1L
D501	8-719-210-12	DIODE 10DF2
D502	8-719-210-12	DIODE 10DF2
D503	8-719-210-12	DIODE 10DF2
D504	8-719-210-12	DIODE 10DF2
D505	8-719-200-02	DIODE 10E-2
D506	8-719-200-02	DIODE 10E-2
D507	8-719-200-02	DIODE 10E-2
D508	8-719-200-02	DIODE 10E-2
D509	8-719-200-02	DIODE 10E-2
D510	8-719-200-02	DIODE 10E-2
D511	8-719-200-02	DIODE 10E-2
D512	8-719-200-02	DIODE 10E-2
D513	8-719-200-02	DIODE 10E-2
D514	8-719-200-02	DIODE 10E-2
D515	8-719-200-02	DIODE 10E-2
D516	8-719-200-02	DIODE 10E-2
D517	8-719-913-02	DIODE HZ30-2L
D518	8-719-910-71	DIODE HZ7A1L
D519	8-719-910-79	DIODE HZ7C3L
D520	8-719-910-24	DIODE HZ12B1L
D521	8-719-107-94	DIODE 1SS202-1
D522	8-719-107-94	DIODE 1SS202-1
D531	8-719-107-94	DIODE 1SS202-1
D532	8-719-107-94	DIODE 1SS202-1
D533	8-719-107-94	DIODE 1SS202-1
D541	8-719-107-94	DIODE 1SS202-1
D561	8-719-107-94	DIODE 1SS202-1
D582	8-719-107-94	DIODE 1SS202-1
D584	8-719-200-02	DIODE 10E-2
D585	8-719-107-94	DIODE 1SS202-1
D586	8-719-200-02	DIODE 10E-2
D611	8-719-903-49	DIODE SLH-54PC3
D612	8-719-903-49	DIODE SLH-54PC3

ELECTRICAL PARTS

Ref.No.	Part No.	Description
D613	8-719-904-08	DIODE SLH-54VC3
D614	8-719-904-07	DIODE SLH-54DC3
D621	8-719-107-94	DIODE 1SS202-1
D731	8-719-107-94	DIODE 1SS202-1
D732	8-719-107-94	DIODE 1SS202-1
D760	8-719-107-94	DIODE 1SS202-1
D761	8-719-902-77	DIODE SLR-34PC5
D762	8-719-902-77	DIODE SLR-34PC5
D763	8-719-902-77	DIODE SLR-34PC5
D764	8-719-107-94	DIODE 1SS202-1
D765	8-719-107-94	DIODE 1SS202-1
D766	8-719-902-77	DIODE SLR-34PC5
D767	8-719-902-77	DIODE SLR-34PC5
D768	8-719-107-94	DIODE 1SS202-1
D769	8-719-107-94	DIODE 1SS202-1
D770	8-719-107-94	DIODE 1SS202-1
D771	8-719-910-96	DIODE HZ9B3L
D772	8-719-107-94	DIODE 1SS202-1
D773	8-719-107-94	DIODE 1SS202-1
D774	8-719-107-94	DIODE 1SS202-1
D1001	8-719-200-02	DIODE 10E-2
D1002	8-719-200-02	DIODE 10E-2
D1003	8-719-107-94	DIODE 1SS202-1
D1004	8-719-107-94	DIODE 1SS202-1
D1005	8-719-107-94	DIODE 1SS202-1
F501 ⚠	1-532-259-00	(AEP,G-AEP,E)...FUSE, TIME-LAG 1.6A
F501 ⚠	1-532-555-00	(US,Canadian)...FUSE, GLASS TUBE 1.6A
F502 ⚠	1-532-259-00	(AEP,G-AEP,E)...FUSE, TIME-LAG 1.6A
F502 ⚠	1-532-555-00	(US,Canadian)...FUSE, GLASS TUBE 1.6A
FL101	1-519-340-11	INDICATOR TUBE, FLUORESCENT
IC301	8-752-018-70	IC CX20187
IC302	8-759-745-60	IC NJM4560D
IC303	8-759-745-60	IC NJM4560D
IC310	8-759-145-57	IC UPC4557C
IC350	8-759-700-04	IC NJM2043D-D
IC360	8-759-140-66	IC UPD4066BC
IC361	8-759-145-58	IC UPC4558C
IC362	8-759-145-57	IC UPC4557C
IC380	8-759-145-57	IC UPC4557C
IC501	8-755-641-60	IC CX564-160
IC502	8-759-700-46	IC CX10034
IC503	8-759-602-47	IC M50761-417P
IC504	8-759-240-19	IC TC4019BP
IC505	8-759-240-69	IC TC4069UBP
IC506	8-759-240-69	IC TC4069UBP
IC507	8-759-240-69	IC TC4069UBP
IC701	8-759-302-98	IC HD614042SA87
IC703	8-759-240-69	IC TC4069UBP
IC704	8-759-700-48	IC NJM2903S
J301	1-507-531-31	PLATE, PIN-JACK
J501	*1-560-039-00	PIN, CONNECTOR
J502	*1-560-039-00	PIN, CONNECTOR
J503	*1-560-280-00	CONNECTOR PIN 3P
L101	1-408-930-00	MICRO INDUCTOR 33MMH
L102	1-408-257-00	MICRO INDUCTOR 10MMH
L103	1-408-254-00	MICRO INDUCTOR 5.6MMH

ELECTRICAL PARTS

Ref.No.	Part No.	Description
L104	1-408-257-00	MICRO INDUCTOR 10MMH
L301	1-407-173-XX	MICRO INDUCTOR 220UH
L501	1-408-117-00	MICRO INDUCTOR 10UH
LPF101	1-231-388-00	FILTER, LOWPASS
LV101	1-235-323-11	ENCAPSULATED PARTS (SPK UNIT)
M1001	1-541-239-00	MOTOR, CAPSTAN
M1002	X-3575-397-1	MOTOR ASSY, REEL
PM1001	1-454-333-00	SOLENOID, PLUNGER
PM1002	1-454-291-00	SOLENOID, PLUNGER
PM1003	1-454-363-00	SOLENOID, PLUNGER
PL310	1-518-386-00	LAMP, PILOT
PL1001	1-518-563-11	LAMP, PILOT
PL1002	1-518-561-21	LAMP, PILOT
PL1003	1-518-562-21	LAMP, PILOT
PS501	1-532-605-00	LINK, IC
Q101	8-729-245-83	TRANSISTOR 2SC2458
Q102	8-729-107-77	TRANSISTOR 2SC3623-L
Q103	8-729-107-77	TRANSISTOR 2SC3623-L
Q104	8-729-107-77	TRANSISTOR 2SC3623-L
Q105	8-729-107-77	TRANSISTOR 2SC3623-L
Q106	8-729-107-77	TRANSISTOR 2SC3623-L
Q107	8-729-107-77	TRANSISTOR 2SC3623-L
Q150	8-729-107-77	TRANSISTOR 2SC3623-L
Q160	8-729-245-83	TRANSISTOR 2SC2458
Q161	8-729-900-89	TRANSISTOR DTC144ES
Q301	8-729-900-89	TRANSISTOR DTC144ES
Q302	8-729-900-89	TRANSISTOR DTC144ES
Q305	8-729-900-80	TRANSISTOR DTC114ES
Q310	8-729-245-83	TRANSISTOR 2SC2458
Q311	8-729-245-83	TRANSISTOR 2SC2458
Q320	8-729-900-89	TRANSISTOR DTC144ES
Q321	8-729-900-65	TRANSISTOR DTA144ES
Q322	8-729-900-89	TRANSISTOR DTC144ES
Q323	8-729-900-65	TRANSISTOR DTA144ES
Q324	8-729-245-83	TRANSISTOR 2SC2458
Q325	8-729-900-65	TRANSISTOR DTA144ES
Q326	8-729-194-57	TRANSISTOR 2SC945-P
Q327	8-729-245-83	TRANSISTOR 2SC2458
Q328	8-729-245-83	TRANSISTOR 2SC2458
Q330	8-729-245-83	TRANSISTOR 2SC2458
Q340	8-729-900-65	TRANSISTOR DTA144ES
Q341	8-729-900-65	TRANSISTOR DTA144ES
Q401	8-729-203-02	TRANSISTOR 2SK30A-O
Q402	8-729-180-92	TRANSISTOR 2SD809-K
Q403	8-729-315-22	TRANSISTOR 2SD1152
Q404	8-729-315-22	TRANSISTOR 2SD1152
Q405	8-729-203-02	TRANSISTOR 2SK30A-O
Q406	8-729-173-13	TRANSISTOR 2SB731
Q407	8-729-384-48	TRANSISTOR 2SA844
Q408	8-729-384-48	TRANSISTOR 2SA844
Q409	8-729-180-92	TRANSISTOR 2SD809-K
Q410	8-729-315-22	TRANSISTOR 2SD1152
Q411	8-729-173-13	TRANSISTOR 2SB731
Q412	8-729-384-48	TRANSISTOR 2SA844

The components identified by shading and mark ⚠ are critical for safety. Replace only with part number specified.

Les composants identifiés par une trame et une marque ⚠ sont critiques pour la sécurité. Ne les remplacer que par une pièce portant le numéro spécifié.

ELECTRICAL PARTS

Ref.No.	Part No.	Description
Q501	8-729-400-81	TRANSISTOR 2SD1266-Q
Q502	8-729-400-81	TRANSISTOR 2SD1266-Q
Q503	8-729-400-81	TRANSISTOR 2SD1266-Q
Q504	8-729-180-92	TRANSISTOR 2SD809-K
Q505	8-729-173-13	TRANSISTOR 2SB731
Q506	8-729-245-83	TRANSISTOR 2SC2458
Q508	8-729-900-36	TRANSISTOR DTC124ES
Q521	8-729-900-36	TRANSISTOR DTC124ES
Q531	8-729-900-61	TRANSISTOR DTA114ES
Q532	8-729-900-63	TRANSISTOR DTA124ES
Q533	8-729-900-63	TRANSISTOR DTA124ES
Q541	8-729-245-83	TRANSISTOR 2SC2458
Q551	8-729-195-23	TRANSISTOR 2SA952
Q552	8-729-195-23	TRANSISTOR 2SA952
Q553	8-729-100-13	TRANSISTOR 2SC2001
Q554	8-729-100-13	TRANSISTOR 2SC2001
Q555	8-729-900-63	TRANSISTOR DTA124ES
Q556	8-729-900-63	TRANSISTOR DTA124ES
Q561	8-729-103-43	TRANSISTOR 2SB734
Q562	8-729-103-43	TRANSISTOR 2SB734
Q563	8-729-177-44	TRANSISTOR 2SD774
Q564	8-729-177-44	TRANSISTOR 2SD774
Q565	8-729-177-44	TRANSISTOR 2SD774
Q566	8-729-900-36	TRANSISTOR DTC124ES
Q567	8-729-900-36	TRANSISTOR DTC124ES
Q568	8-729-900-63	TRANSISTOR DTA124ES
Q569	8-729-900-63	TRANSISTOR DTA124ES
Q570	8-729-900-63	TRANSISTOR DTA124ES
Q571	8-729-900-63	TRANSISTOR DTA124ES
Q581	8-729-900-63	TRANSISTOR DTA124ES
Q582	8-729-900-63	TRANSISTOR DTA124ES
Q583	8-729-900-36	TRANSISTOR DTC124ES
Q584	8-729-900-36	TRANSISTOR DTC124ES
Q585	8-729-900-63	TRANSISTOR DTA124ES
Q586	8-729-900-36	TRANSISTOR DTC124ES
Q621	8-729-178-54	TRANSISTOR 2SC2785
Q622	8-729-178-54	TRANSISTOR 2SC2785
Q701	8-729-900-63	TRANSISTOR DTA124ES
Q702	8-729-900-63	TRANSISTOR DTA124ES
Q703	8-729-900-63	TRANSISTOR DTA124ES
Q704	8-729-900-63	TRANSISTOR DTA124ES
Q705	8-729-900-63	TRANSISTOR DTA124ES
Q706	8-729-900-63	TRANSISTOR DTA124ES
Q707	8-729-900-63	TRANSISTOR DTA124ES
Q708	8-729-900-63	TRANSISTOR DTA124ES
Q709	8-729-900-63	TRANSISTOR DTA124ES
Q710	8-729-900-63	TRANSISTOR DTA124ES
Q711	8-729-900-63	TRANSISTOR DTA124ES
Q712	8-729-900-63	TRANSISTOR DTA124ES
Q713	8-729-900-63	TRANSISTOR DTA124ES
Q714	8-729-900-63	TRANSISTOR DTA124ES
Q730	8-729-900-36	TRANSISTOR DTC124ES
Q760	8-729-900-36	TRANSISTOR DTC124ES
Q1001	8-729-110-21	TRANSISTOR PH102

ELECTRICAL PARTS

Ref.No.	Part No.	Description			
Q1002	8-729-110-21	TRANSISTOR PH102			
Q1003	1-806-713-11	PHOTO SENSOR			
Q1004	8-729-900-63	TRANSISTOR DTA124ES			
R100	1-214-765-00	METAL	33K	1%	1/4W
R101	1-214-750-00	METAL	7.5K	1%	1/4W
R102	1-214-729-00	METAL	1K	1%	1/4W
R105	1-214-777-00	METAL	100K	1%	1/4W
R106	1-214-749-00	METAL	6.8K	1%	1/4W
R107	1-214-741-00	METAL	3.3K	1%	1/4W
R110	1-214-738-00	METAL	2.4K	1%	1/4W
R111	1-214-744-00	METAL	4.3K	1%	1/4W
R112	1-247-123-00	CARBON	470	5%	1/4W
R113	1-214-737-00	METAL	2.2K	1%	1/4W
R114	1-214-737-00	METAL	2.2K	1%	1/4W
R115	1-247-151-00	CARBON	6.8K	5%	1/4W
R116	1-247-127-00	CARBON	680	5%	1/4W
R117	1-214-729-00	METAL	1K	1%	1/4W
R118	1-214-753-00	METAL	10K	1%	1/4W
R119	1-214-760-00	METAL	20K	1%	1/4W
R120	1-247-148-00	CARBON	5.1K	5%	1/4W
R121	1-247-162-00	CARBON	20K	5%	1/4W
R122	1-247-138-00	CARBON	2K	5%	1/4W
R123	1-247-155-00	CARBON	10K	5%	1/4W
R124	1-246-529-00	CARBON	220K	5%	1/4W
R125	1-247-717-11	CARBON	2.2K	5%	1/4W
R127	1-247-177-00	CARBON	82K	5%	1/4W
R128	1-247-164-00	CARBON	24K	5%	1/4W
R129	1-214-749-00	METAL	6.8K	1%	1/4W
R130	1-247-150-00	CARBON	6.2K	5%	1/4W
R131	1-247-113-00	CARBON	180	5%	1/4W
R132	1-247-145-00	CARBON	3.9K	5%	1/4W
R133	1-247-107-00	CARBON	100	5%	1/4W
R134	1-247-155-00	CARBON	10K	5%	1/4W
R136	1-247-142-00	CARBON	3K	5%	1/4W
R137	1-246-460-00	CARBON	300	5%	1/4W
R140	1-247-863-00	CARBON	22K	5%	1/6W
R141	1-247-863-00	CARBON	22K	5%	1/6W
R142	1-247-863-00	CARBON	22K	5%	1/6W
R143	1-247-131-00	CARBON	1K	5%	1/4W
R144	1-247-147-00	CARBON	4.7K	5%	1/4W
R145	1-247-131-00	CARBON	1K	5%	1/4W
R146	1-247-147-00	CARBON	4.7K	5%	1/4W
R150	1-214-756-00	METAL	13K	1%	1/4W
R151	1-214-104-00	METAL	68	1%	1/4W
R152	1-214-780-00	METAL	130K	1%	1/4W
R153	1-214-746-00	METAL	5.1K	1%	1/4W
R154	1-247-163-00	CARBON	22K	5%	1/4W
R155	1-214-737-00	METAL	2.2K	1%	1/4W
R156	1-214-739-00	METAL	2.7K	1%	1/4W
R157	1-214-785-00	METAL	220K	1%	1/4W
R158	1-214-729-00	METAL	1K	1%	1/4W
R159	1-247-147-00	CARBON	4.7K	5%	1/4W
R160	1-246-529-00	CARBON	220K	5%	1/4W
R161	1-214-729-00	METAL	1K	1%	1/4W
R162	1-214-760-00	METAL	20K	1%	1/4W
R163	1-247-145-00	CARBON	3.9K	5%	1/4W
R164	1-247-170-00	CARBON	43K	5%	1/4W

ELECTRICAL PARTS

Ref.No.	Part No.	Description				
R165	1-247-170-00	CARBON	43K	5%	1/4W	
R166	1-247-142-00	CARBON	3K	5%	1/4W	
R167	1-247-171-00	CARBON	47K	5%	1/4W	
R168	1-247-091-00	CARBON	22	5%	1/4W	
R169	1-247-173-00	CARBON	56K	5%	1/4W	
R170	1-247-847-00	CARBON	4.7K	5%	1/6W	
R177	1-247-155-00	CARBON	10K	5%	1/4W	
R178	1-247-131-00	CARBON	1K	5%	1/4W	
R179	1-214-753-00	METAL	10K	1%	1/4W	
R180	1-247-163-00	CARBON	22K	5%	1/4W	
R181	1-247-125-00	CARBON	560	5%	1/4W	
R182	1-247-171-00	CARBON	47K	5%	1/4W	
R183	1-246-533-00	CARBON	330K	5%	1/4W	
R184	1-247-111-00	CARBON	150	5%	1/4W	
R301	1-247-155-00	CARBON	10K	5%	1/4W	
R302	1-214-777-00	METAL	100K	1%	1/4W	
R304	1-247-155-00	CARBON	10K	5%	1/4W	
R305	1-247-871-00	CARBON	47K	5%	1/6W	
R306	1-247-871-00	CARBON	47K	5%	1/6W	
R307	1-247-871-00	CARBON	47K	5%	1/6W	
R308	1-247-155-00	CARBON	10K	5%	1/4W	
R310	1-247-091-00	CARBON	22	5%	1/4W	
R311	1-247-161-00	CARBON	18K	5%	1/4W	
R313	1-247-161-00	CARBON	18K	5%	1/4W	
R314	1-246-460-00	CARBON	300	5%	1/4W	
R315	1-247-115-00	CARBON	220	5%	1/4W	
R316	1-247-162-00	CARBON	20K	5%	1/4W	
R317	1-247-145-00	CARBON	3.9K	5%	1/4W	
R318	1-247-847-00	CARBON	4.7K	5%	1/6W	
R320	1-247-145-00	CARBON	3.9K	5%	1/4W	
R321	1-247-155-00	CARBON	10K	5%	1/4W	
R322	1-247-155-00	CARBON	10K	5%	1/4W	
R323	1-249-459-11	CARBON	12K	5%	1/4W	
R324	1-247-131-00	CARBON	1K	5%	1/4W	
R325	1-247-155-00	CARBON	10K	5%	1/4W	
R326	1-247-165-00	CARBON	27K	5%	1/4W	
R327	1-247-165-00	CARBON	27K	5%	1/4W	
R328 ⚠	1-212-853-00	FUSIBLE	6.8	5%	1/4W	F
R330	1-247-143-00	CARBON	3.3K	5%	1/4W	
R331	1-247-147-00	CARBON	4.7K	5%	1/4W	
R332	1-247-155-00	CARBON	10K	5%	1/4W	
R340	1-247-855-00	CARBON	10K	5%	1/6W	
R341	1-247-855-00	CARBON	10K	5%	1/6W	
R342	1-247-855-00	CARBON	10K	5%	1/6W	
R343	1-247-155-00	CARBON	10K	5%	1/4W	
R344	1-247-855-00	CARBON	10K	5%	1/6W	
R345	1-247-847-00	CARBON	4.7K	5%	1/6W	
R352	1-247-171-00	CARBON	47K	5%	1/4W	
R360	1-247-171-00	CARBON	47K	5%	1/4W	
R380	1-247-107-00	CARBON	100	5%	1/4W	
R381	1-247-107-00	CARBON	100	5%	1/4W	
R392	1-247-107-00	CARBON	100	5%	1/4W	
R393	1-247-107-00	CARBON	100	5%	1/4W	
R396	1-247-155-00	CARBON	10K	5%	1/4W	

The components identified by shading and mark ⚠ are critical for safety. Replace only with part number specified.

Les composants identifiés par une trame et une marque ⚠ sont critiques pour la sécurité. Ne les remplacer que par une pièce portant le numéro spécifié.

ELECTRICAL PARTS

Ref.No.	Part No.	Description				
R397	1-247-171-00	CARBON	47K	5%	1/4W	
R398	1-247-855-00	CARBON	10K	5%	1/6W	
R399	1-247-171-00	CARBON	47K	5%	1/4W	
R401	1-247-171-00	CARBON	47K	5%	1/4W	
R402	1-247-171-00	CARBON	47K	5%	1/4W	
R403	1-247-147-00	CARBON	4.7K	5%	1/4W	
R404	1-247-147-00	CARBON	4.7K	5%	1/4W	
R405	1-214-729-00	METAL	1K	1%	1/4W	
R406	1-214-711-00	METAL	180	1%	1/4W	
R407	1-214-729-00	METAL	1K	1%	1/4W	
R408	1-214-711-00	METAL	180	1%	1/4W	
R409	1-247-131-00	CARBON	1K	5%	1/4W	
R410	1-247-131-00	CARBON	1K	5%	1/4W	
R411	1-247-147-00	CARBON	4.7K	5%	1/4W	
R412	1-247-147-00	CARBON	4.7K	5%	1/4W	
R501 ⚠	1-213-046-00	FUSIBLE	2.7	5%	1W	F
R503 ⚠	1-212-978-51	FUSIBLE	68	5%	1/2W	F
R504 ⚠	1-217-389-00	FUSIBLE	15	5%	1/4W	F
R505 ⚠	1-212-863-00	FUSIBLE	18	5%	1/4W	F
R506	1-247-831-00	CARBON	1K	5%	1/6W	
R507	1-247-831-00	CARBON	1K	5%	1/6W	
R508	1-247-831-00	CARBON	1K	5%	1/6W	
R509	1-247-831-00	CARBON	1K	5%	1/6W	
R510	1-247-825-00	CARBON	560	5%	1/6W	
R511	1-247-855-00	CARBON	10K	5%	1/6W	
R515	1-247-855-00	CARBON	10K	5%	1/6W	
R516	1-247-147-00	CARBON	4.7K	5%	1/4W	
R521	1-247-847-00	CARBON	4.7K	5%	1/6W	
R522	1-247-813-00	CARBON	180	5%	1/6W	
R523	1-247-867-00	CARBON	33K	5%	1/6W	
R524	1-247-867-00	CARBON	33K	5%	1/6W	
R525	1-247-847-00	CARBON	4.7K	5%	1/6W	
R531	1-247-903-00	CARBON	1M	5%	1/6W	
R532	1-247-841-00	CARBON	2.7K	5%	1/6W	
R533	1-247-861-00	CARBON	18K	5%	1/6W	
R534	1-247-857-00	CARBON	12K	5%	1/6W	
R535	1-247-861-00	CARBON	18K	5%	1/6W	
R536	1-247-783-00	CARBON	10	5%	1/6W	
R537	1-247-807-00	CARBON	100	5%	1/6W	
R538	1-247-855-00	CARBON	10K	5%	1/6W	
R540	1-247-871-00	CARBON	47K	5%	1/6W	
R541	1-247-855-00	CARBON	10K	5%	1/6W	
R542	1-247-863-00	CARBON	22K	5%	1/6W	
R543	1-247-863-00	CARBON	22K	5%	1/6W	
R544	1-247-863-00	CARBON	22K	5%	1/6W	
R545	1-247-863-00	CARBON	22K	5%	1/6W	
R546	1-247-863-00	CARBON	22K	5%	1/6W	
R547	1-247-863-00	CARBON	22K	5%	1/6W	
R548	1-247-863-00	CARBON	22K	5%	1/6W	
R549	1-247-863-00	CARBON	22K	5%	1/6W	
R551	1-247-855-00	CARBON	10K	5%	1/6W	
R552	1-247-855-00	CARBON	10K	5%	1/6W	
R553	1-247-831-00	CARBON	1K	5%	1/6W	
R554	1-247-831-00	CARBON	1K	5%	1/6W	
R555	1-247-831-00	CARBON	1K	5%	1/6W	
R556	1-247-831-00	CARBON	1K	5%	1/6W	
R557	1-247-855-00	CARBON	10K	5%	1/6W	

ELECTRICAL PARTS

Ref.No.	Part No.	Description				
R558	1-247-855-00	CARBON	10K	5%	1/6W	
R561 ⚠	1-206-473-00	METAL OXIDE	27	5%	2W	F
R562 ⚠	1-206-439-00	METAL OXIDE	1	5%	2W	F
R563 ⚠	1-206-463-00	METAL OXIDE	10	5%	2W	F
R564	1-247-871-00	CARBON	47K	5%	1/6W	
R565	1-247-143-00	CARBON	3.3K	5%	1/4W	
R566	1-247-871-00	CARBON	47K	5%	1/6W	
R567	1-247-831-00	CARBON	1K	5%	1/6W	
R568	1-247-871-00	CARBON	47K	5%	1/6W	
R569	1-247-143-00	CARBON	3.3K	5%	1/4W	
R570	1-247-871-00	CARBON	47K	5%	1/6W	
R571	1-247-831-00	CARBON	1K	5%	1/6W	
R572	1-247-871-00	CARBON	47K	5%	1/6W	
R573	1-247-831-00	CARBON	1K	5%	1/6W	
R581	1-247-879-00	CARBON	100K	5%	1/6W	
R582	1-247-903-00	CARBON	1M	5%	1/6W	
R583	1-247-847-00	CARBON	4.7K	5%	1/6W	
R584	1-249-421-11	CARBON	2.2K	5%	1/6W	
R585	1-247-863-00	CARBON	22K	5%	1/6W	
R586	1-247-863-00	CARBON	22K	5%	1/6W	
R587	1-247-863-00	CARBON	22K	5%	1/6W	
R588	1-247-863-00	CARBON	22K	5%	1/6W	
R589	1-247-879-00	CARBON	100K	5%	1/6W	
R590	1-247-879-00	CARBON	100K	5%	1/6W	
R591	1-247-831-00	CARBON	1K	5%	1/6W	
R601	1-247-831-00	CARBON	1K	5%	1/6W	
R602	1-247-831-00	CARBON	1K	5%	1/6W	
R603	1-247-831-00	CARBON	1K	5%	1/6W	
R604	1-247-831-00	CARBON	1K	5%	1/6W	
R605	1-247-831-00	CARBON	1K	5%	1/6W	
R606	1-247-831-00	CARBON	1K	5%	1/6W	
R607	1-247-831-00	CARBON	1K	5%	1/6W	
R608	1-247-831-00	CARBON	1K	5%	1/6W	
R609	1-247-831-00	CARBON	1K	5%	1/6W	
R610	1-247-815-00	CARBON	220	5%	1/6W	
R611	1-247-817-00	CARBON	270	5%	1/6W	
R612	1-247-817-00	CARBON	270	5%	1/6W	
R613	1-247-819-00	CARBON	330	5%	1/6W	
R614	1-247-819-00	CARBON	330	5%	1/6W	
R621	1-247-810-00	CARBON	130	5%	1/6W	
R622	1-247-835-00	CARBON	1.5K	5%	1/6W	
R623	1-247-843-00	CARBON	3.3K	5%	1/6W	
R624	1-247-855-00	CARBON	10K	5%	1/6W	
R625	1-247-855-00	CARBON	10K	5%	1/6W	
R626	1-247-872-00	CARBON	51K	5%	1/6W	
R627	1-247-872-00	CARBON	51K	5%	1/6W	
R628	1-247-847-00	CARBON	4.7K	5%	1/6W	
R629	1-247-855-00	CARBON	10K	5%	1/6W	
R630	1-247-855-00	CARBON	10K	5%	1/6W	
R631	1-247-815-00	CARBON	220	5%	1/6W	
R701	1-247-879-00	CARBON	100K	5%	1/6W	
R702	1-247-879-00	CARBON	100K	5%	1/6W	
R703	1-247-879-00	CARBON	100K	5%	1/6W	
R704	1-247-879-00	CARBON	100K	5%	1/6W	

The components identified by shading and mark ⚠ are critical for safety. Replace only with part number specified.

Les composants identifiés par une trame et une marque ⚠ sont critiques pour la sécurité. Ne les remplacer que par une pièce portant le numéro spécifié.

ELECTRICAL PARTS

Ref.No.	Part No.	Description			
R705	1-247-879-00	CARBON	100K	5%	1/6W
R706	1-247-879-00	CARBON	100K	5%	1/6W
R707	1-247-879-00	CARBON	100K	5%	1/6W
R708	1-247-879-00	CARBON	100K	5%	1/6W
R709	1-247-879-00	CARBON	100K	5%	1/6W
R710	1-247-879-00	CARBON	100K	5%	1/6W
R711	1-247-879-00	CARBON	100K	5%	1/6W
R712	1-247-879-00	CARBON	100K	5%	1/6W
R713	1-247-879-00	CARBON	100K	5%	1/6W
R714	1-247-879-00	CARBON	100K	5%	1/6W
R730	1-215-452-00	METAL	20K	1%	1/6W
R731	1-215-452-00	METAL	20K	1%	1/6W
R732	1-215-452-00	METAL	20K	1%	1/6W
R733	1-215-452-00	METAL	20K	1%	1/6W
R734	1-215-452-00	METAL	20K	1%	1/6W
R735	1-215-452-00	METAL	20K	1%	1/6W
R736	1-215-452-00	METAL	20K	1%	1/6W
R737	1-215-445-00	METAL	10K	1%	1/6W
R738	1-215-445-00	METAL	10K	1%	1/6W
R739	1-215-445-00	METAL	10K	1%	1/6W
R740	1-215-445-00	METAL	10K	1%	1/6W
R741	1-215-445-00	METAL	10K	1%	1/6W
R742	1-215-445-00	METAL	10K	1%	1/6W
R743	1-215-460-00	METAL	43K	1%	1/6W
R744	1-215-425-00	METAL	1.5K	1%	1/6W
R745	1-247-847-00	CARBON	4.7K	5%	1/6W
R746	1-247-847-00	CARBON	4.7K	5%	1/6W
R750	1-247-863-00	CARBON	22K	5%	1/6W
R761	1-249-421-11	CARBON	2.2K	5%	1/6W
R762	1-247-823-00	CARBON	470	5%	1/6W
R763	1-247-823-00	CARBON	470	5%	1/6W
R771	1-247-831-00	CARBON	1K	5%	1/6W
R772	1-247-863-00	CARBON	22K	5%	1/6W
R773	1-247-831-00	CARBON	1K	5%	1/6W
R774	1-247-863-00	CARBON	22K	5%	1/6W
RV101	1-230-768-11	RES, VAR, CARBON 20K/20K			
RV102	1-230-769-11	RES, VAR, CARBON 10K/10K			
RV103	1-224-252-XX	RES, ADJ, METAL GLAZE 10K			
RV106	1-228-994-00	RES, ADJ, CARBON 10K			
RV150	1-224-252-XX	RES, ADJ, METAL GLAZE 10K			
RV160	1-228-994-00	RES, ADJ, CARBON 10K			
RV310	1-228-989-00	RES, ADJ, CARBON 470			
RV380	1-230-770-12	RES, VAR, CARBON 20K/20K			
RV621	1-228-994-00	RES, ADJ, CARBON 10K			
RY301	1-515-473-00	RELAY			
RY302	1-515-473-00	RELAY			
S001 ⚠	1-553-318-00	SWITCH, PUSH (AC POWER)(1 KEY)			
S301	1-570-180-11	SWITCH, PUSH (3 KEY)(DOLBY NR/MPX FILTER)			
S601	1-553-856-00	SWITCH, KEY BOARD (PAUSE)			
S602	1-553-856-00	SWITCH, KEY BOARD (REC MUTE)			
S603	1-553-856-00	SWITCH, KEY BOARD (REC)			
S604	1-553-856-00	SWITCH, KEY BOARD (FF)			
S605	1-553-856-00	SWITCH, KEY BOARD (FWD)			
S606	1-553-856-00	SWITCH, KEY BOARD (STOP)			
S607	1-553-856-00	SWITCH, KEY BOARD (REV)			
S608	1-553-856-00	SWITCH, KEY BOARD (REW)			

ELECTRICAL PARTS

Ref.No.	Part No.	Description
S609	1-553-856-00	SWITCH, KEY BOARD (CAL)
S610	1-553-856-00	SWITCH, KEY BOARD (TAPE OPR)
S611	1-554-208-00	SWITCH, SLIDE (TIMER)
S612	1-570-179-11	SWITCH, PUSH (3 KEY)(DIRECTION)
S771	1-553-856-00	SWITCH, KEY BOARD (MEMORY)
S772	1-553-856-00	SWITCH, KEY BOARD (RESET)
S1001	1-554-205-00	SWITCH, PUSH
S1002	1-554-205-00	SWITCH, PUSH
S1003	1-554-205-00	SWITCH, PUSH
S1004	1-554-205-00	SWITCH, PUSH
S1005	1-554-205-00	SWITCH, PUSH
S1006	1-516-323-XX	SLIDE SWITCH
T001 ⚠	1-448-104-11	(US,Canadian)...TRANSFORMER, POWER
T001 ⚠	1-448-105-11	(AEP,G-AEP).....TRANSFORMER, POWER
T001 ⚠	1-448-106-11	(E).....TRANSFORMER, POWER
T301	1-433-283-11	TRANSFORMER, BIAS OSCILLATION
TP2	*1-560-060-00	PIN, CONNECTOR 2P
TP3	*1-560-061-00	PIN, CONNECTOR 3P
VS001 ⚠	1-526-576-51	(E)...SELECTOR, POWER VOLTAGE
X531	1-527-532-00	OSCILLATOR, CERAMIC
X581	1-567-160-00	OSCILLATOR, CERAMIC

ACCESSORY & PACKING MATERIAL

Part No.	Description
1-551-734-11	CORD, CONNECTION (RK-74A)
1-556-372-41	CORD, CONNECTION (4 CORE)
3-315-149-00	CUSHION (LEFT), LOWER
3-315-150-00	CUSHION (RIGHT), LOWER
3-315-151-00	CUSHION (LEFT), UPPER
3-315-152-00	CUSHION (RIGHT), UPPER
3-324-801-11	(US,Canadian,AEP,G-AEP)...INDIVIDUAL CARTON
3-324-801-21	(E).....INDIVIDUAL CARTON
3-701-630-00	BAG, POLYETHYLENE
3-760-311-11	(US,Canadian,AEP,E)...MANUAL, INSTRUCTION
3-760-311-41	(AEP).....MANUAL, INSTRUCTION
4-876-352-00	SHEET, PROTECTION
X-3324-801-1	(G-AEP,E)...CARD ASSY, WARRANTY (TYPE A)

The components identified by shading and mark ⚠ are critical for safety. Replace only with part number specified.

Les composants identifiés par une trame et une marque ⚠ sont critiques pour la sécurité. Ne les remplacer que par une pièce portant le numéro spécifié.

9-951-840-11

Sony Corporation

English
85G0474-1
Printed in Japan