TC-EX66

SERVICE MANUAL

AEP Model
UK Model
E Model

This set is the cassette deck section
in MHC-EX66.

Dolby noise reduction manufactured under license from Dolby Laboratories Licensing Corporation. "DOLBY" and the double-D symbol DD are trademarks of Dolby Laboratories Licensing Corporation.

Model Name Using Similar Mechanism	NEW
Tape Transport Mechanism Type	TCM-ACLM578

SPECIFICATIONS

Track method	4-track, 2-channel stereo
Fast forward time	Approx. 120 seconds (for C-60)
Frequency response	
With DOLBY NR set to OFF	
TYPE-IV tape:	30 – 15,000 Hz, ±3 dB
	20 – 16,000 Hz, ±6 dB
TYPE-II tape:	30 – 15,000 Hz, ±3 dB
	20 – 16,000 Hz, ±6 dB
TYPE-I tape:	30 – 14,000 Hz, ±3 dB
	20 – 15,000 Hz, ±6 dB
Overall S/N ratio	57 dB (TYPE-IV tape)
Distortion	
315 Hz, tertiary higher harmonic distortion:	1.8% (TYPE-II tape)
Recording level:	250 nWb/m
Max. recording level audio compensation	
For a TYPE-IV tape	
DOLBY NR C:	73 dB
DOLBY NR B:	66 dB
DOLBY NR OFF:	58 dB
Dimensions (w/h/d) incl. projecting parts and controls:	Approx. 280 × 90 × 348.5 mm
Mass	Approx. 2.6 kg

Design and specifications are subject to change without notice.

STEREO CASSETTE DECK

MICROFILM

SONY®

TABLE OF CONTENTS

Servicing Notes 2

1. GENERAL
Playing a Tape 3
Recording on a Tape Manually 4
Recording the favorite CD Tracks on a Tape 5

2. DISASSEMBLY 6

3. MECHANICAL ADJUSTMENTS 10

4. ELECTRICAL ADJUSTMENTS 10

5. DIAGRAMS
5-1. Printed Wiring Boards 15
5-2. Schematic Diagram 19
5-3. IC Pin Function 25

6. EXPLODED VIEWS 27

7. ELECTRICAL PARTS LIST 32

SERVICING NOTES

How to operate with a single unit.

Normally, this set is not operated with its own.
The exclusive jig (J-2501-078-A) and service box (PFJ-1) are necessary to operate the set with a single unit.
Turn the power set of the service box ON. Then press the ENTER/NEXT button and SLEEP button at the same time to turn the power on.

Connection:

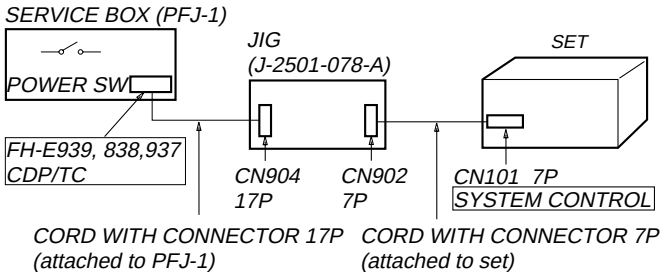

• KEY/FL tube/LED check mode.

To enter KEY/FL tube/LED check mode, press the ENTER/NEXT and REC buttons at the same time.
Under mode, every time when press any key or turn MULTI CONTROLLER knob, change to next situation.

① All LED indicators light on
② All FL tube indicators light on
③ A part of FL tube light on mode 1. (Indicated ST-SEG)
④ A part of FL tube light on mode 2. (Indicated RDS-SEG)
⑤ KEY check mode

Note:

1) All LED light on mode is kept, when buttons which is pressed to enter all LED light on mode, release same time.
When release them separate timing, it is moved to next All LED light on mode.

2) After all LED light on mode, light on point remove one by one, when any button pressed or MULTI CONTROLLER knob turned.

3) Under KEY check mode, every time buttons pressed numerical value of “KEY” in FL tube increase.
And that time, numerical value of “ECDR” increase when MULTI CONTROLLER button turn to + direction, and it decrease turn to – direction.

When you want to finish this mode, unplug the power of amplifier or turn off PFJ-1 of POWER switch.

Playing a tape

(MHC-EX66 or the optional TC-TX77 users only)

You can use any type of tape, TYPE-I (normal), TYPE-II (CrO_2) and TYPE-IV (metal), since the deck automatically detects the tape type (ATS*).
MHC-EX66 is used for illustration purpose.

* The Automatic Tape Selection (ATS) feature automatically sets the equalization and bias to match the inserted tape type.

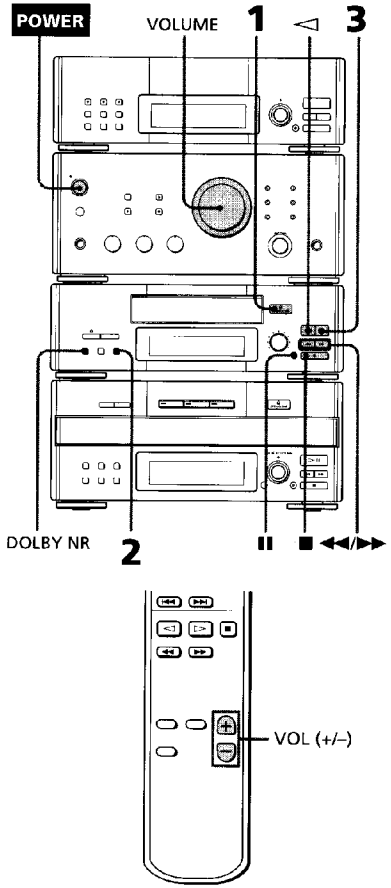

1 Press ≙ OPEN/CLOSE on the tape deck and insert a recorded tape.
Press ≙ OPEN/CLOSE again to close the tray.

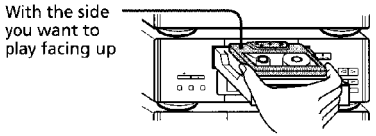

2 Press DIRECTION repeatedly to select the side you want to play.
Select ⇄ to play one side. Select ⮐ to play both sides once. To play both sides in succession, select ⮐*.

3 Press ▷.
Press ◁ to play the reverse side. Playback starts.

* The deck stops automatically after repeating the sequence five times.

To	Do this
Stop play	Press ■.
Pause	Press II. Press again to resume play.
Fast-forward	Press ■, then press ▶▶ (for front side) or ◀◀ (for reverse side).
Rewind	Press ■, then press ◀◀ (for front side) or ▶▶ (for reverse side).
Select a track (AMS*)	Press ▶▶ (to go forward) or ◀◀ (to go back) during the front side playback. Press ◀◀ (to go forward) or ▶▶ (to go back) during the reverse side playback.
Remove the tape	Press ≙ OPEN/CLOSE.
Adjust the volume	Turn VOLUME (or press VOL ⊕ or ⊖ on the remote).

* The Automatic Music Sensor (AMS) feature detects a blank space of more than four seconds between tracks and locates the track quickly.

Tips

- Pressing SYSTEM POWER on the DHC-MD77/EX77MD automatically turns on the TC-TX77 deck if you connect them to each other using the audio bus cable.
- Pressing ▷ or ◁ when the power is off automatically turns the power on and starts tape playback if there is a tape in the deck (One Touch Play).
- You can switch from another source to the tape deck just by pressing ▷ or ◁ (Automatic Source Selection).
- To start playing automatically from the beginning of the tape after fast winding (Auto Play), press ▷ while holding down ◀◀ (for front side) or press ◁ while holding down ▶▶ (for reverse side).
- When you want to reduce the hiss noise in low-level high-frequency signals, press DOLBY NR repeatedly to select B or C.

Notes

The AMS feature may not work properly when:
– The blank space between tracks is less than four seconds long.
– Different material is recorded on the left and right channels (e.g., karaoke tapes with the instrumental music and a singer's voice, foreign language practice tapes, etc.).
– Very low-level signals or low-frequency signals such as a bass saxophone are continuously recorded on the tape.
– The system is placed too close to a TV. (Move the system away from the TV or turn off the TV.)

This section is extracted from instruction manual.

The Tape Deck (MHC-EX66 or the optional TC-TX77 users only)

Recording on a tape manually

You can record a CD or an MD as you like, for example, recording just the tracks you want or recording from the middle of the tape.

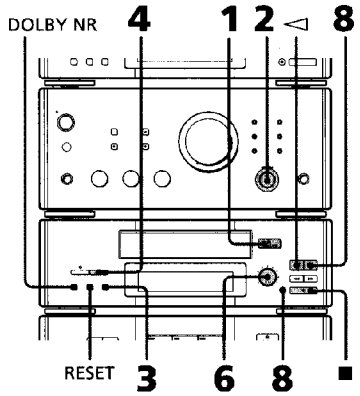

1 Insert a blank tape.
To insert a tape, see page 20.

2 Turn FUNCTION to select the sound source to be recorded.
When you record from the radio, tune in the desired radio station.
When you record the sound of a TV or VCR, select "VIDEO 1" or "VIDEO 2/AUX" (or "VIDEO 2" for DHC-MD77). See page 13 for details.

3 Press DIRECTION repeatedly to select the side you want to record on.
Select ⇄ to record on one side. Select ⮌ or ⮌ to record on both sides.

4 Press ● REC on the tape deck.
The tape deck stands by for recording. "PLAY ▷ ❚❚ [REC]" (for front side) appears.

5 Start playing the source to be recorded.

6 Turn REC LEVEL to adjust the recording level.
While monitoring the sound at the highest level, adjust the recording level so that it falls within the range illustrated below.

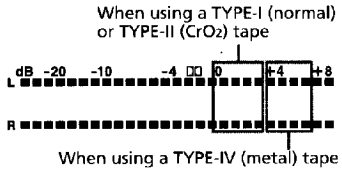

7 Stop playing the source.

8 Press ❚❚ or ▷ on the tape deck.
Recording starts.

9 Start playing the source to be recorded.

To	Press
Stop recording	■ on the tape deck.
Pause recording	❚❚ on the tape deck.

Tips

- Pressing SYSTEM POWER on the DHC-MD77/EX77MD automatically turns on the TC-TX77 deck if you connect them to each other using the audio bus cable.
- If you want to record from the reverse side, press ◁ in step 4 so that "◁ PLAY ❚❚ [REC]" (for reverse side) appears.
- When you want to reduce the hiss noise in low-level high-frequency signals, press DOLBY NR repeatedly to select B or C before step 4. You cannot switch DOLBY NR during recording.
- If you press RESET, the counter display returns to "00 00."

Recording the favorite CD tracks on a tape

You can select your favorite CD tracks with the Program Play feature, then record the program on a tape using the CD Synchro Recording feature.

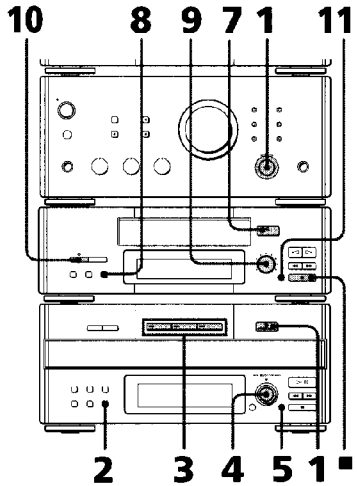

Selecting the tracks

1 Turn FUNCTION until the CD indicator lights up, then place a CD (CDs) on the disc tray.

2 Press PROGRAM.
"PROGRAM" appears.

3 Press one of the DISC 1 – 3 buttons to select a CD.

4 Turn SELECTOR until the desired track number appears.

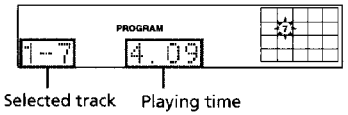

5 Press ENTER.
The track is programmed. The last programmed track appears, followed by the total playing time.

6 To program additional tracks, repeat steps 3 to 5.
Skip step 3 if you select a track from the same disc.

Recording on a tape

7 Insert a blank tape.
To insert a tape, see page 20.

8 Press DIRECTION repeatedly to select the side you want to record on.
Select ⇄ to record on one side. Select ⊃ or ⊂⊃ to record on both sides.

9 Turn REC LEVEL to adjust the recording level.
See "Recording on a tape manually" for details.

10 Press CD SYNC on the tape deck.
The tape deck stands by for recording and the CD is in pause for playback. The CD SYNC indicator lights up and "PLAY ▷ ❚❚ (REC)" (for front side) appears.

11 Press ❚❚ on the tape deck.
Recording starts.

To stop recording

Press ■ on the tape deck or the CD player.

Tips

- Pressing SYSTEM POWER on the DHC-MD77/EX77MD automatically turns on the TC-TX77 deck if you connect them to each other using the audio bus cable.
- If you want to record from the reverse side, press ◁ in step 10 so that "◁ PLAY ❚❚ (REC)" (for reverse side) appears.
- When you record on both sides, be sure to start from the front side. If you start from the reverse side, recording stops at the end of the reverse side even though you select ⊂⊃.
- When you want to reduce the hiss noise in low-level high-frequency signals, press DOLBY NR repeatedly to select B or C before step 9. You cannot switch DOLBY NR during recording.
- If the tape reaches the end of its front side while dual-sided recording, the fadeout feature works so that a track is not abruptly cut off at the end of the tape (Fade Synchro). The track will be recorded again from the beginning on the reverse side. The Fade Synchro feature works during one-side recording, too.
- You cannot perform CD Synchro Recording by pressing the CD SYNC buttons on both the tape deck and the MD deck at the same time.
  Use the CD Synchro Recording feature for a tape and record on an MD manually. This method is recommended since on the MD deck, you can erase the overlapping track recorded using the Fade Synchro feature just by specifying its track number (Erase Function).

SECTION 2
DISASSEMBLY

• This set can be disassembled in the order shown below.

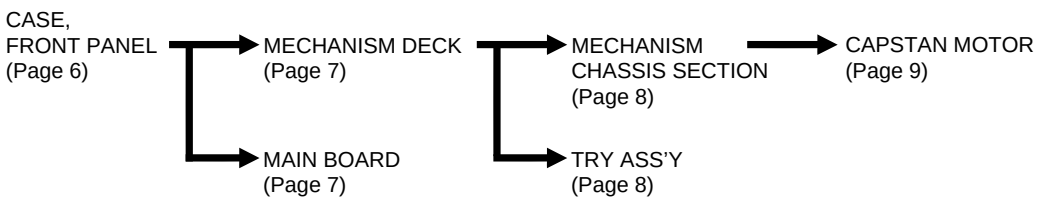

Note: Follow the disassembly procedure in the numerical order given.

CASE, FRONT PANEL

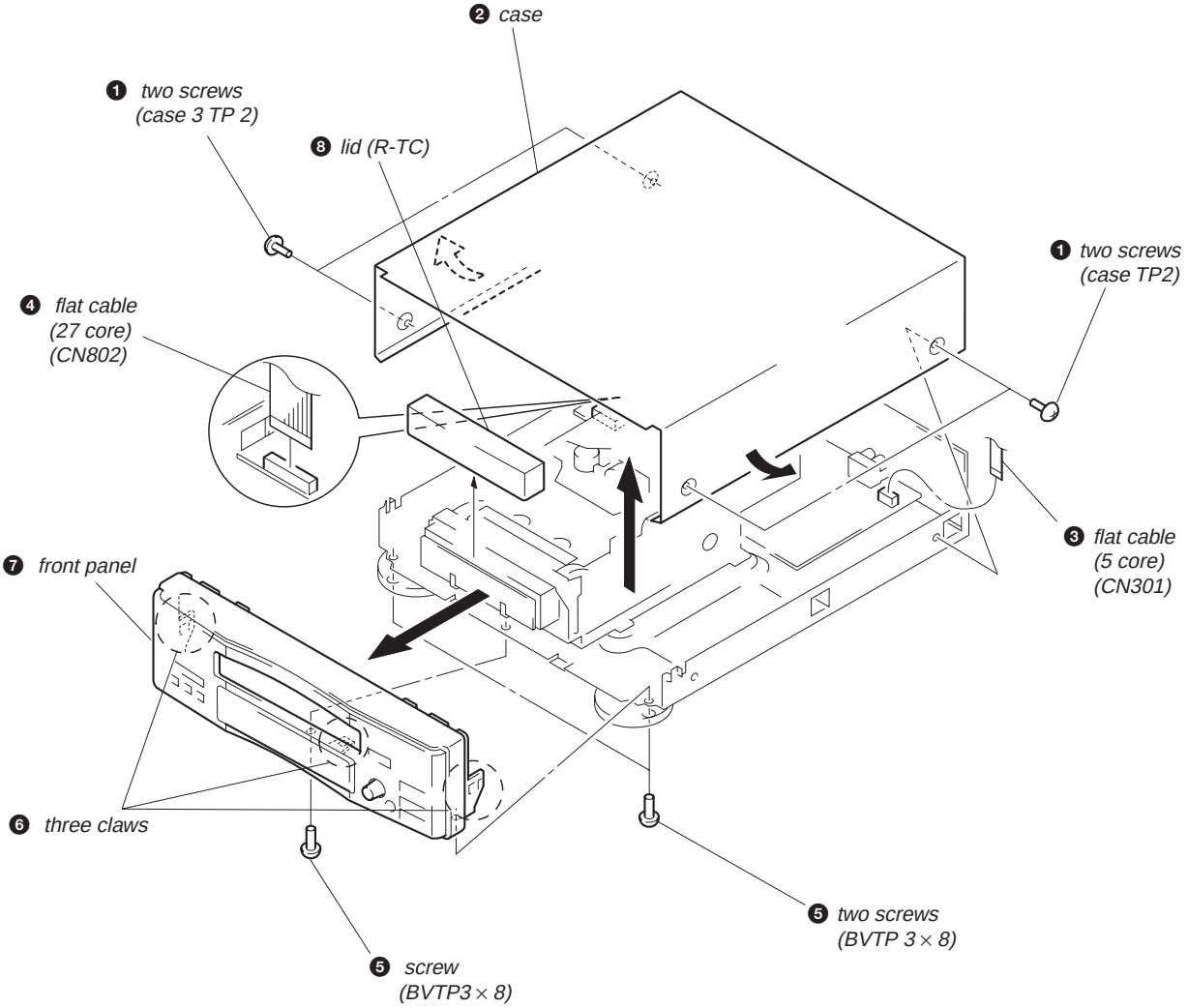

MECHANISM DECK

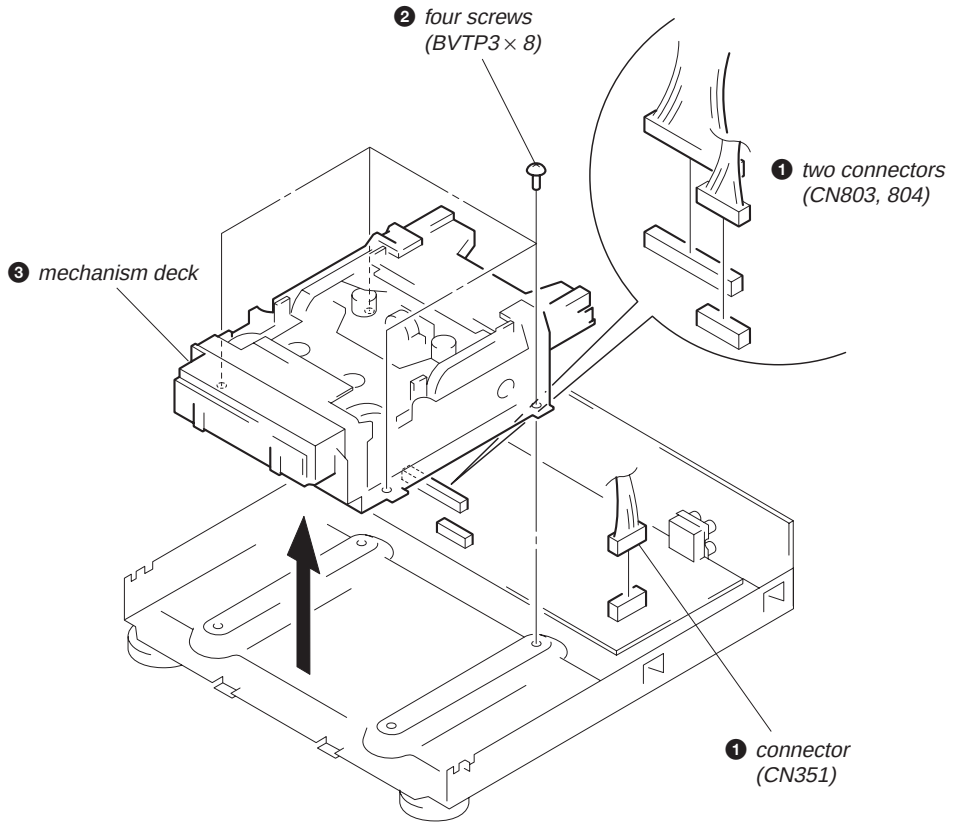

MAIN BOARD

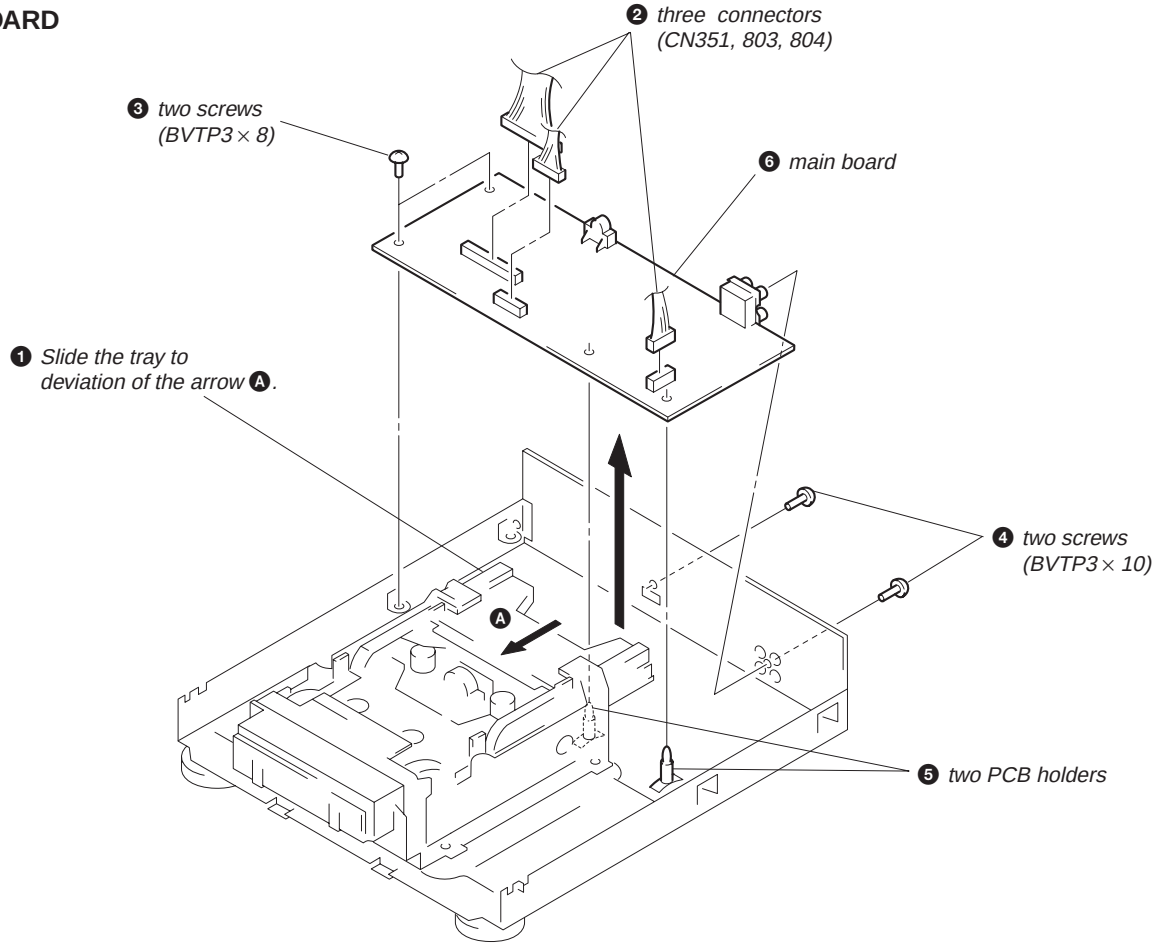

TRAY ASS'Y

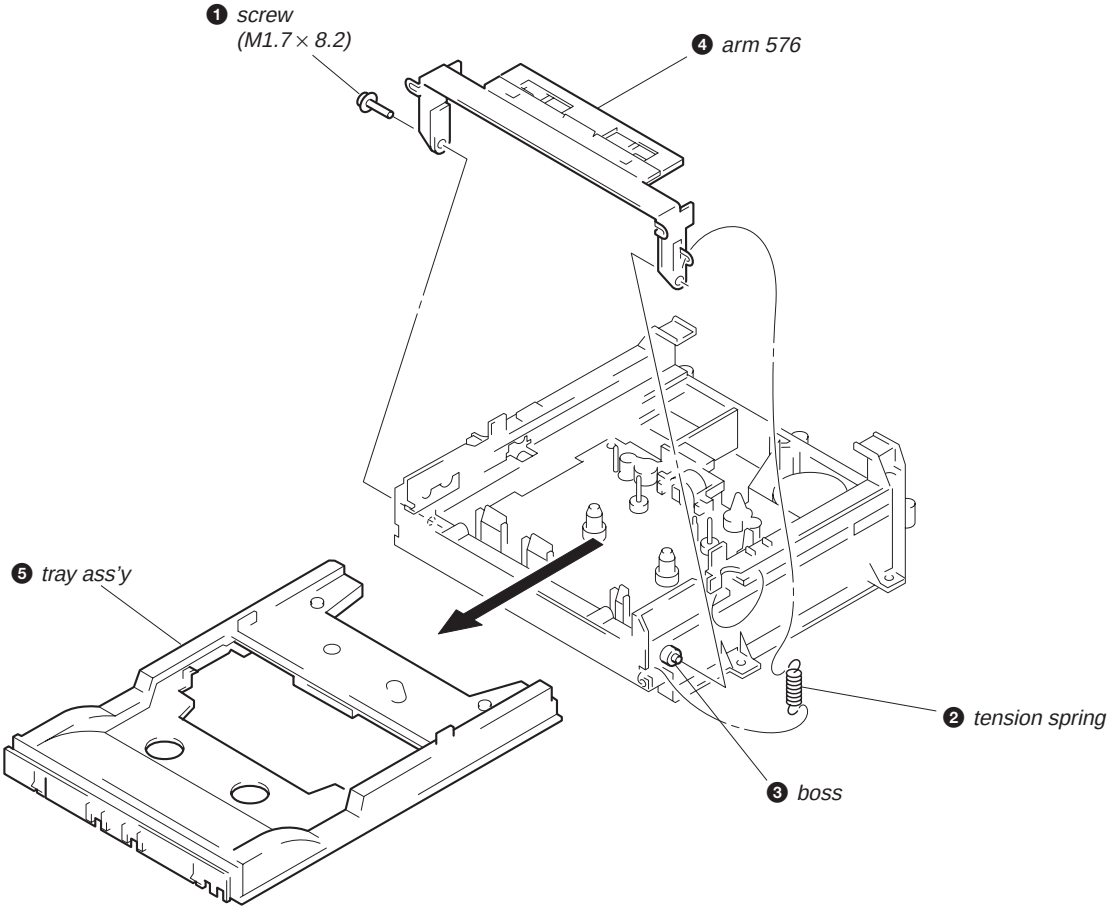

MECHANISM CHASSIS SECTION

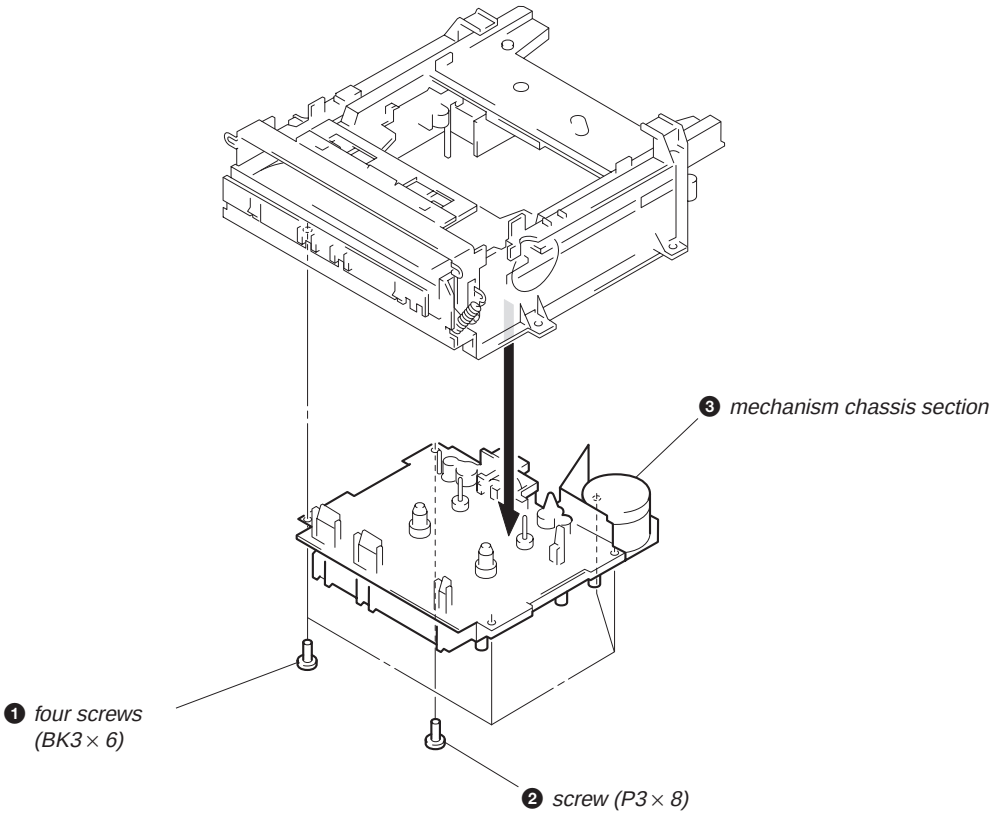

CAPSTAN MOTOTR

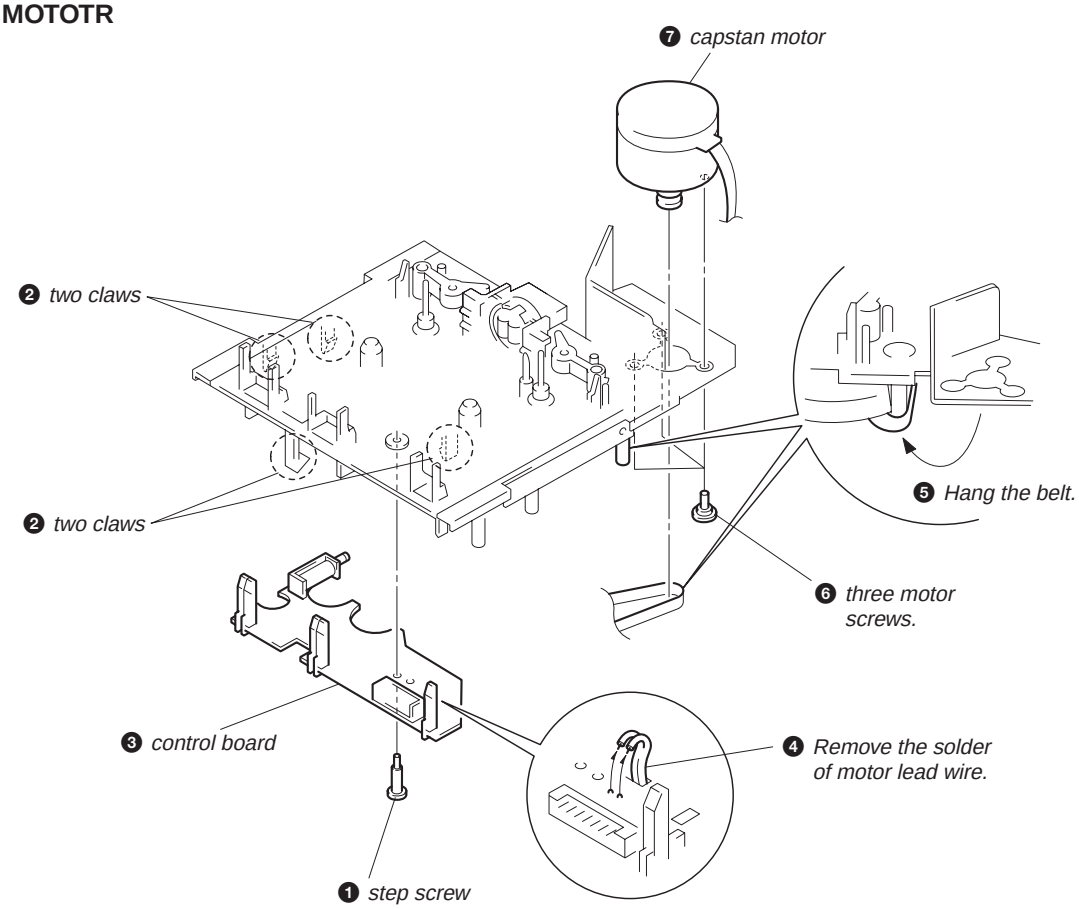

SECTION 3
MECHANICAL ADJUSTMENTS

PRECAUTION

1. Clean the following parts with a denatured-alcohol-moistened swab:
   record/playback/earth head pinch roller
   rubber belts capstan
   idlers
2. Demagnetize the record/playback head with a head demagnetizer. (Do not bring the head demagnetizer close to the erase head.)
3. Do not use a magnetized screwdriver for the adjustments.
4. After the adjustments, apply suitable locking compound to the parts adjusted.
5. The adjustments should be performed with the rated power supply voltage unless otherwise noted.

Torque Measurement

Mode	Torque Meter	Meter Reading
FWD	CQ-102C	30-65 g•cm (0.42-0.90 oz•inch)
FWD Back tension		1.5-6 g•cm (0.021-0.083 oz•inch)
REV	CQ-102RC	30-65 g•cm (0.42-0.90 oz•inch)
REV Back tension		1.5-6 g•cm (0.021-0.083 oz•inch)
FF, REW	CQ-201B	70-130 g•cm (0.98-1.80 oz•inch)

SECTION 4
ELECTRICAL ADJUSTMENTS

PRECAUTION

1. The adjustment should be performed in the publication. (Be sure to male playback adjustment at first.)
2. The adjustments and measurement should be performed for both L-CH and R-CH.
   - Switch position
     DOLBY NR switch : OFF
     DIRECTION switch : ⇄
   - Standard record position
     Deliver the standard input signal level to input jack and set the REC LEVEL (RV301) control to obtain the standard output signal level as follows.

– Record Mode –

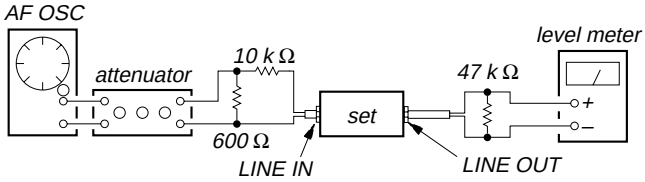

Standard Input Level

Input terminal	LINE IN
source impedance	10 kΩ
input signal level	0.5 V (– 3.8 dB)

Standard Output Level

Output terminal	LINE OUT (L-CH)
load impedance	47 kΩ
output signal level	0.5 V (– 3.8 dB)

Test Tape

Type	Signal	Used for
P-4-A100	10 kHz, – 10 dB	Azimuth Adjustment
P-4-L300	315 Hz, 0 dB	PB Level Adjustment
WS-48B	3 kHz, 0 dB	Tape Speed Adjustment

0 dB = 0.775 V

Test Mode

With the POWER turned OFF, short the test point CN801 (2P) on the MAIN board (making IC801 pin ⑭ "L") and turn the POWER ON. Thus, the TEST mode will be activated.
If a recording is done in the TEST mode, the REC MEMORY mode becomes active where the tape is rewound by the amount of recording when a rewinding is executed after recording.
After adjustment, make the CN801 (2P) open to release the TEST mode.

Record/Playback Head Azimuth Adjustment

Procedure:

1. Mode: REV playback

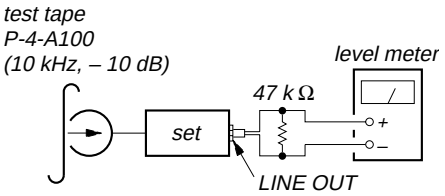

2. Turn the adjustment screw for the maximum output levels. If these levels do not match, turn the adjustment screw until both of output levels match together within 1 dB.

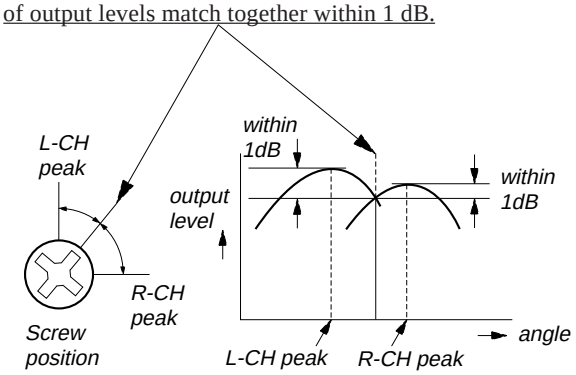

3. Phase Check
   Mode: REV playback

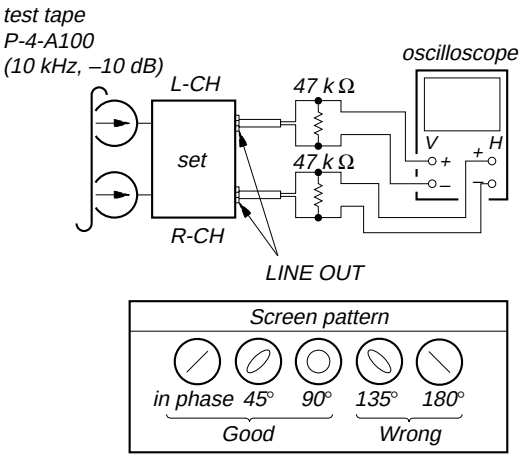

4. Set in the FWD mode and repeat the step 1 to 3.
5. After the adjustment, lock the screw with locking compound.

Adjustment Location: Record/Playback head

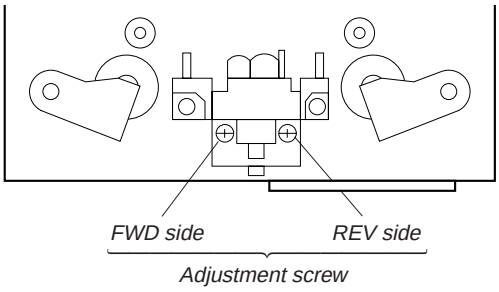

Tape Speed Adjustment

Procedure:

Mode: FWD playback

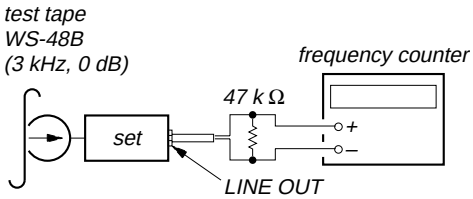

1. Set to FWD playback mode.
2. Adjust Variable resistor on the motor (M902) so that the frequency counter reading becomes
   3,000 ± 90 Hz.
3. Confirm that the deviation between tape top and tape end is within 3%.

Adjustment Location: CAPSTAN/REEL motor (M902)

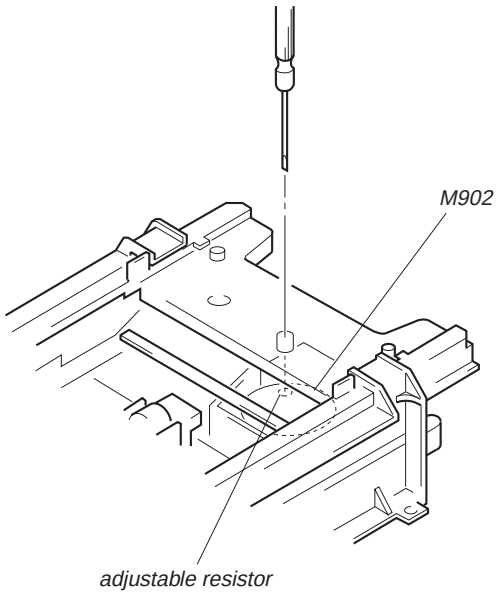

Sample Value of Wow and flutter: 0.3% or less W. RMS (WS-48B)

Playback Level Adjustment

Procedure:

Mode: FWD playback

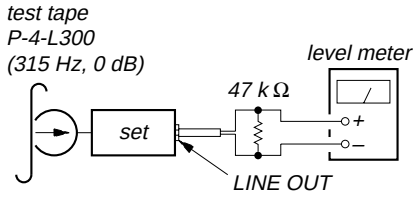

Adjust RV151 (L-CH) and RV251 (R-CH) so that the reading on level meter meets the adjustment limits below.

Adjustment Limits:

LINE OUT level: – 7.7 ± 0.5 dB (0.301 to 0.338 V)

Level difference between channels: within 2 dB

Check that the LINE OUT level does not change even if Playback and Stop operation is repeated several times.

Adjustment Location: MAIN board (See page 13)

Record BIAS Adjustment

Setting:

REC LEVEL control: Standard record position (See page 10)

Set to the TEST mode (REC MEMRY mode) (See page 10)

Procedure:

1. Mode: Record

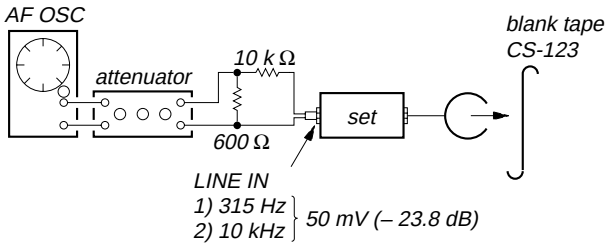

2. Mode: Playback

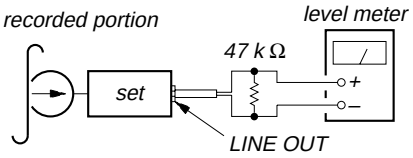

3. Confirm playback the signal recorded in step 1 become adjustment level as follows.
4. If these levels do not adjustment level, adjust the RV152 (L-CH) and RV252 (R-CH) to repeat step 1 and 2.

Adjustment Level: Playback output of 10 kHz to playback output of 315 Hz: ± 0.5 dB.

Adjustment Location: MAIN board (See page 13)

Record Level Adjustment

Setting:

REC LEVEL control: Standard record position (See page 10)

set to the TEST mode (REC MEMRY mode) (See page 10)

Procedure:

1. Mode :Record

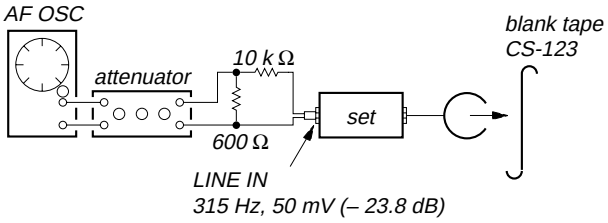

2. Mode: Playback

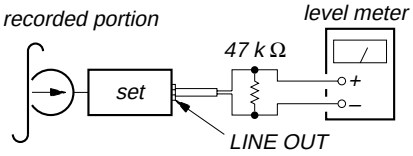

3. Confirm playback the signal recorded in step 1 become adjustment level as follows.
4. If these levels do not adjustment level, adjust RV153 (L-CH) and RV253 (R-CH) to repeat step 1 and 2.

Adjustment Level: – 23.8 ± 0.5 dB (47 to 53 mV)

Adjustment Location: MAIN board (See page 13)

• **Adjustment Parts Location**

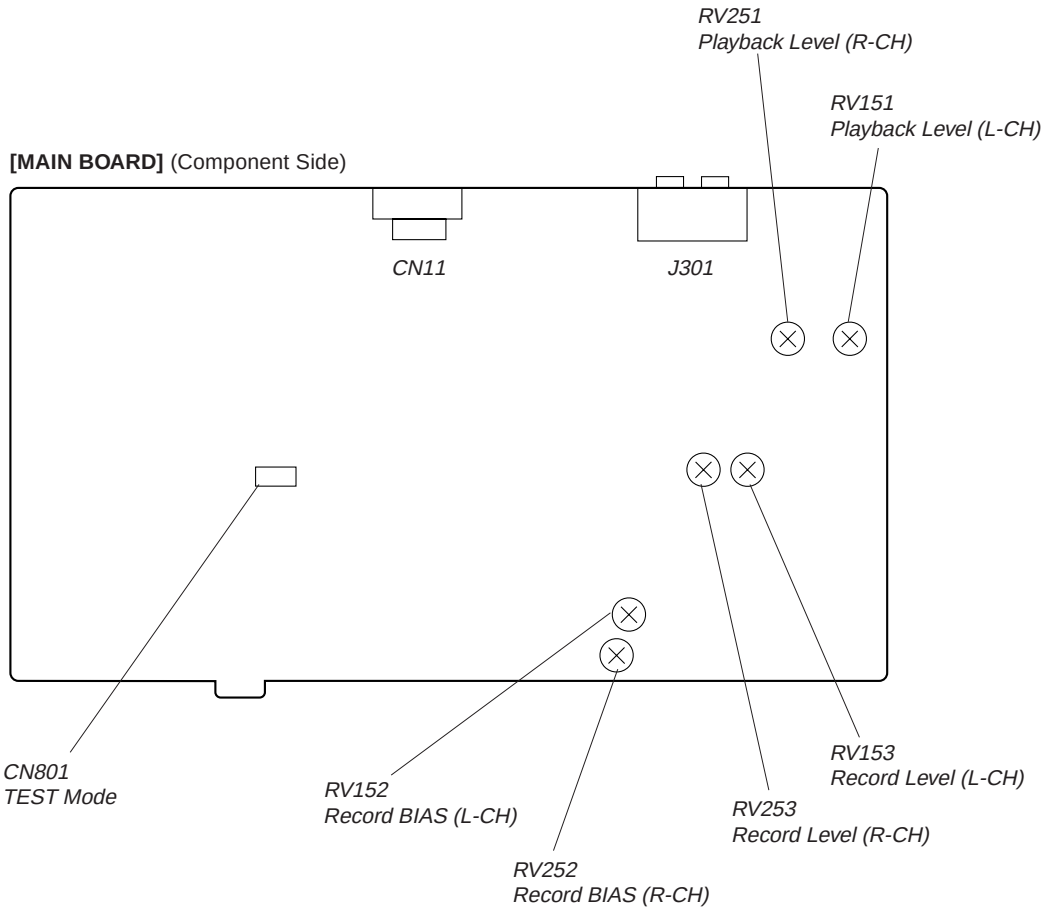

SECTION 5
DIAGRAMS

- **IC Block Diagrams**

IC304 CXA1198AP

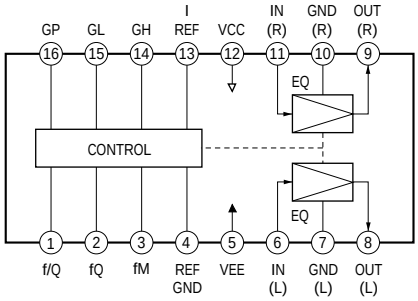

IC804 LB1641

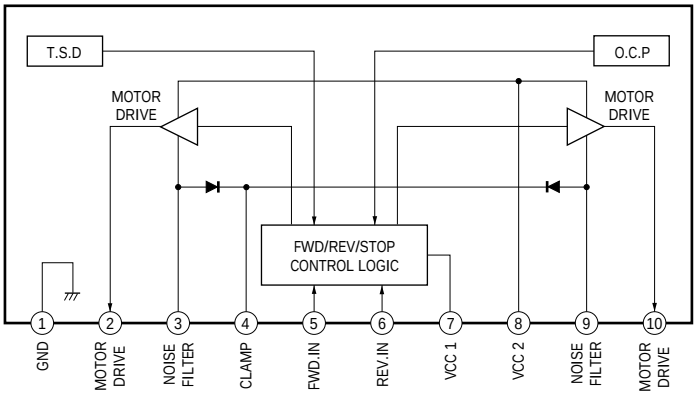

IC805 LA5617

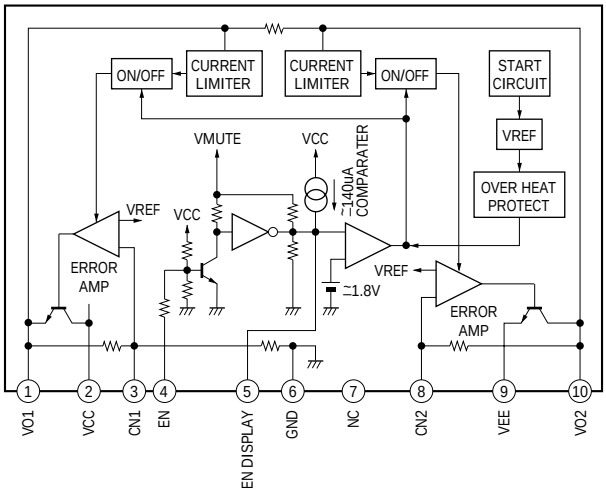

SECTION 1
DIAGRAMS

• **Waveform**

❶ IC801 ⑪

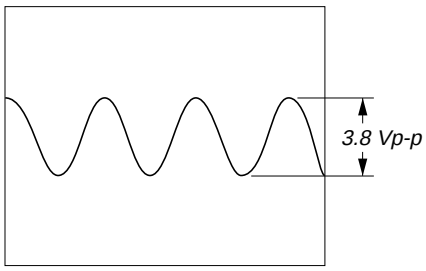

4 MHz

5-3. IC PIN FUNCTION DESCRIPTION

• MAIN BOARD IC801 HD6433724E66F (SYSTEM CONTROL)

Pin No.	Pin Name	I/O	Function
1	PULSE	I	Pulse signal input
2	NO-USE	–	Not used (Fixed at “L”)
3	METER-L	I	Digital peak level meter signal input (L-ch)
4	METER-R	I	Digital peak level meter signal input (R-ch)
5	AD-GND	–	Ground for A/D converter
6	TEST	I	Not used (Fixed at “L”)
7	NO-USE	–	Not-used (Open)
8	NO-USE	–	Not-used (Fixed at “L”)
9	SYS-GND	–	Ground for system
10	OSC-OUT	O	System clock output (4 MHz)
11	OSC-IN	I	System clock input (4 MHz)
12	RESET	I	Reset signal input
13	AUB-IN	I	Audio bus input
14	AUB-OUT	O	Audio bus output
15	NO-USE	–	Not used (Fixed at “L”)
16	NO-USE	–	Not used (Fixed at “L”)
17	NO-USE	–	Not used (Fixed at “L”)
18	NO-USE	–	Not used (Fixed at “L”)
19	NO-USE	–	Not used (Fixed at “L”)
20	DOLBY C/$\overline{B}$	O	DOLBY B/C select signal output “L”: DOLBY B, “H”: DOLBY C
21	DOLBY ON/$\overline{OFF}$	O	DOLBY on/off select signal output “L”: DOLBY off, “H”: DOLBY on
22	CDSYNC-LED	O	Control output to CD SYNC LED (D851)
23	SEG17	O	Segment signal output to fluorescent indicator tube (FLT851)
24	SEG16	O	Segment signal output to fluorescent indicator tube (FLT851)
25	SEG15	O	Segment signal output to fluorescent indicator tube (FLT851)
26	SEG14	O	Segment signal output to fluorescent indicator tube (FLT851)
27	SEG13	O	Segment signal output to fluorescent indicator tube (FLT851)
28	SEG12	O	Segment signal output to fluorescent indicator tube (FLT851)
29	SEG11	O	Segment signal output to fluorescent indicator tube (FLT851)
30	SEG10	O	Segment signal output to fluorescent indicator tube (FLT851)
31	SEG9	O	Segment signal output to fluorescent indicator tube (FLT851)
32	SEG8	O	Segment signal output to fluorescent indicator tube (FLT851)
33	SEG7	O	Segment signal output to fluorescent indicator tube (FLT851)
34	SEG6	O	Segment signal output to fluorescent indicator tube (FLT851)
35	SEG5	O	Segment signal output to fluorescent indicator tube (FLT851)
36	SEG4	O	Segment signal output to fluorescent indicator tube (FLT851)
37	SEG3	O	Segment signal output to fluorescent indicator tube (FLT851)
38	SEG2	O	Segment signal output to fluorescent indicator tube (FLT851)
39	SEG1	O	Segment signal output to fluorescent indicator tube (FLT851)
40	FL-GND	I	Ground for fluorescent indicator tube (Fixed at “L” (–20 V))
41	GRID 1	O	Grid signal output to fluorescent indicator tube (FLT851)
42	GRID 2	O	Grid signal output to fluorescent indicator tube (FLT851)
43	GRID 3	O	Grid signal output to fluorescent indicator tube (FLT851)
44	GRID 4	O	Grid signal output to fluorescent indicator tube (FLT851)
45	GRID 5	O	Grid signal output to fluorescent indicator tube (FLT851)

Pin No.	Pin Name	I/O	Function
46	NO-USE	–	Not used (Open)
47	NO-USE	–	Not used (Open)
48	NO-USE	–	Not used (Open)
49	TYPE IV	O	Tape type output "H": Metal Position
50	TYPE II	O	Tape type output "H": High position
51	TYPE I	O	Tape type output "H": Normal position
52	REC MUTE	O	Recording mute on/off control output "H": Mute on
53	RELAY	O	Relay drive output "H": On
54	NC	–	Not used (Open)
55	REC/$\overline{\text{PB}}$	O	Mode control output to DOLBY NR amplifier (IC301) "L": Record
56	PB MUTE	O	Playback mute on/off control output "H": Mute on
57	SYS-VCC	I	Power supply for system
58	OPTION	O	Not used (Fixed at "L")
59	NO-USE	–	Not used (Fixed at "L")
60	POWER-OUT	O	Audio and mechanism power on/off output "H": On
61	BIAS	O	Control output to recording bias switch (Q352) "L": On
62	POW-IN	I	Primary power on/off input "H": On
63	CLOSE SW	I	Close detection input from S901 "L": Close
64	OPEN-SW	I	Open detection input from S902 "L": Open
65	SOLENOIDE	O	Plunger (PMxxx) drive output "H": On
66	$\overline{\text{LINE-MUTE}}$	O	Line mute on/off control output "L": Mute on
67	CHORM-SW	I	Tape type detection input from Sxxx "L": Type I
68	METAL-SW	I	Tape type detection input from Sxxx "L": Type IV
69	REC-REV-SW	I	Record proof detection input from Sxxx (REV side) "H": Not nail
70	REC-FW-SW	I	Record proof detection input from Sxxx (FWD side) "H": Not nail
71	CAPSTAN	O	Capstan/reel motor (M902) drive output "H": On
72	$\overline{\text{CLOSE}}$	O	Loading motor (M901) drive output *1
73	$\overline{\text{OPEN}}$	O	Loading motor (M901) drive output *1
74	TEST	I	Test mode terminal
75	MODE-SW	I	Head sensor input from Sxxx
76	AD-VCC	I	Power supply for A/D converter
77	KEY 1	I	Key input (A/D convert input)*2
78	KEY 2	I	Key input (A/D convert input)*2
79	HALF-SW	I	Cassette half detection input from Sxxx
80	AMS-IN	I	AMS input

***1 Loading Motor (M901)**

	IN	OUT	BRAKE
CLOSE ⑫	H	L	H
OPEN ⑬	L	H	H

***2 Key Input**

Voltage / Input port	0 V	0.45 V	1.19 V	2.19 V	3.2 V	3.98 V	4.48 V	5.0 V
Pin ⑱, KEY 2	Open/Close ≙	STOP ■	PAUSE ❚❚	FWD ▷	REV ◁	CD SYNC	—	Not key input
Pin ⑰, KEY 1	POWER ON/OFF	REW ◀◀	FF ▶▶	REC ●	RESET	DIRECTION	DOLBY NR	Not key input

SECTION 6
EXPLODED VIEWS

NOTE:
- -XX and -X mean standardized parts, so they may have some difference from the original one.
- Color Indication of Appearance Parts
  Example:
  KNOB, BALANCE (WHITE) . . . (RED)
  ↑ Parts Color ↑ Cabinet's Color
- Items marked "*" are not stocked since they are seldom required for routine service. Some delay should be anticipated when ordering these items.
- The mechanical parts with no reference number in the exploded views are not supplied.
- Hardware (# mark) list is given in the last of the electrical parts list.

(1) CASE, FRONT PANEL SECTION

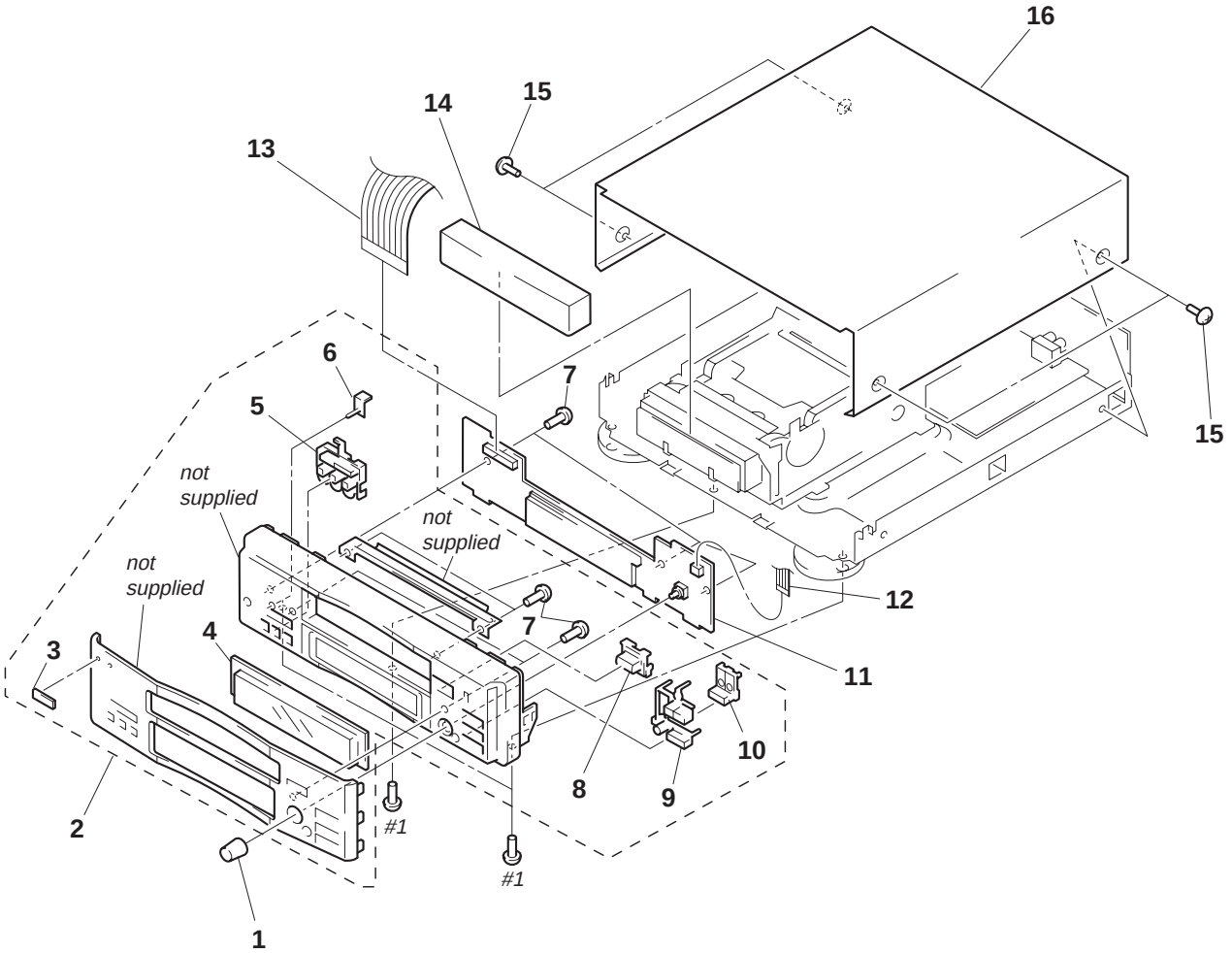

Ref. No.	Part No.	Description	Remark
1	4-985-926-01	KNOB	
2	X-3373-604-1	PANEL ASSY, FRONT	
3	4-962-708-01	EMBLEM (4-A), SONY	
4	3-939-648-01	WINDOW (TC)	
5	3-939-646-01	BUTTON (REC) (CD SYNC, ● REC)	
6	3-939-647-01	INDICATOR (TC)	
7	4-951-620-01	SCREW (2.6X8), +BVTP	
8	3-012-560-01	BUTTON (EJECT) (≜ OPEN/CLOSE)	
9	3-939-642-01	BUTTON (PLAY) (◁, ▷, ■)	
10	3-939-643-01	BUTTON (FF) (◀◀, ▶▶)	
* 11	A-2007-722-A	PANEL BOARD, COMPLETE	
12	1-782-490-11	WIRE (FLAT TYPE) (5 CORE)	
13	1-773-257-11	WIRE (FLAT TYPE) (27 CORE)	
14	3-012-561-01	LID (R-TC)	
15	3-363-099-01	SCREW (CASE 3 TP2)	
* 16	3-939-652-11	CASE	

(2) CHASSIS SECTION

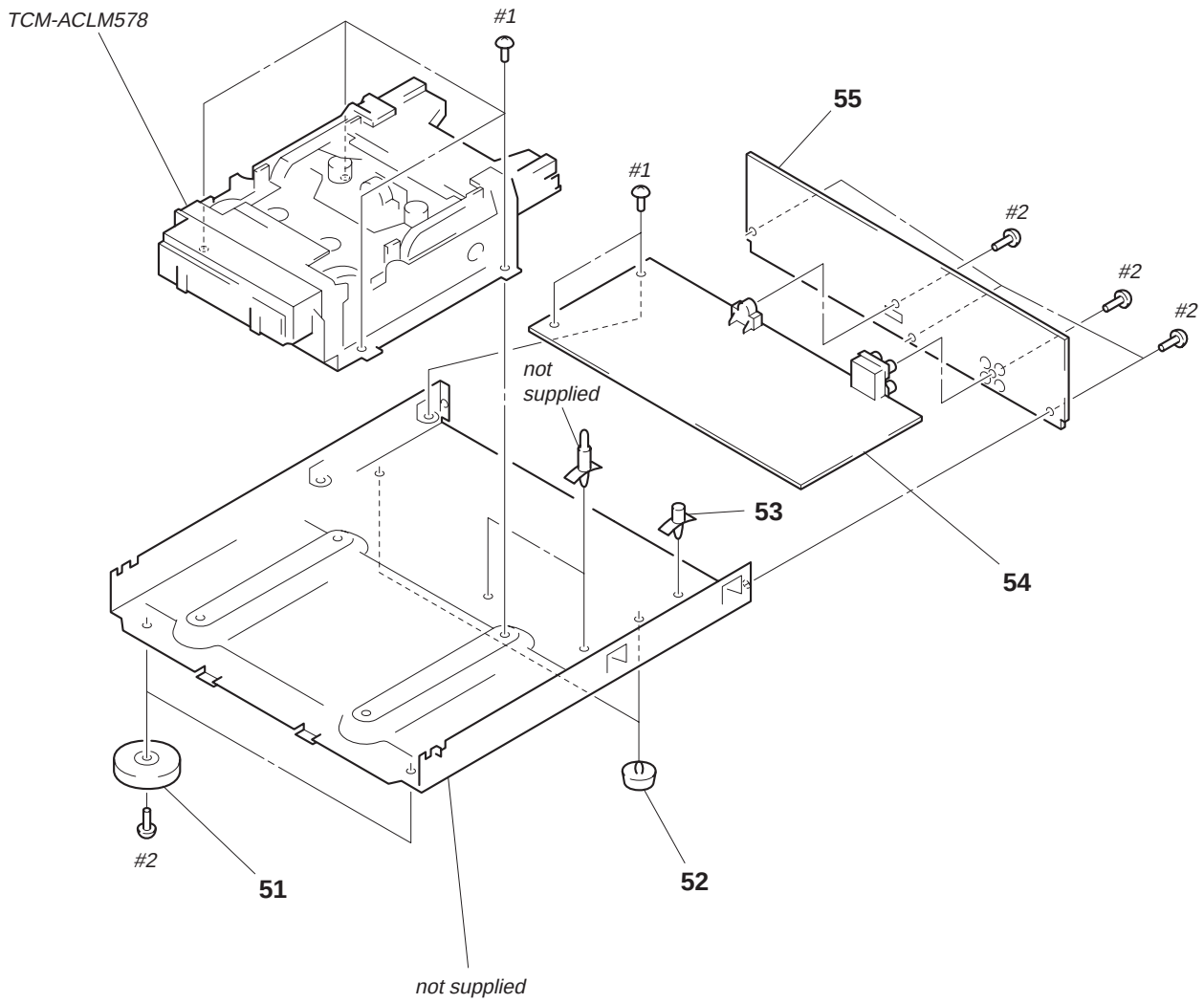

Ref. No.	Part No.	Description	Remark
51	4-977-699-11	LEG (F)	
52	4-965-822-01	FOOT	
* 53	3-350-847-31	HOLDER, PCB	
* 54	A-2007-721-A	MAIN BOARD, COMPLETE	
* 55	3-012-563-02	PANEL, BACK	

(3) MECHANISM DECK SECTION-1 (TCM-ACLM578)

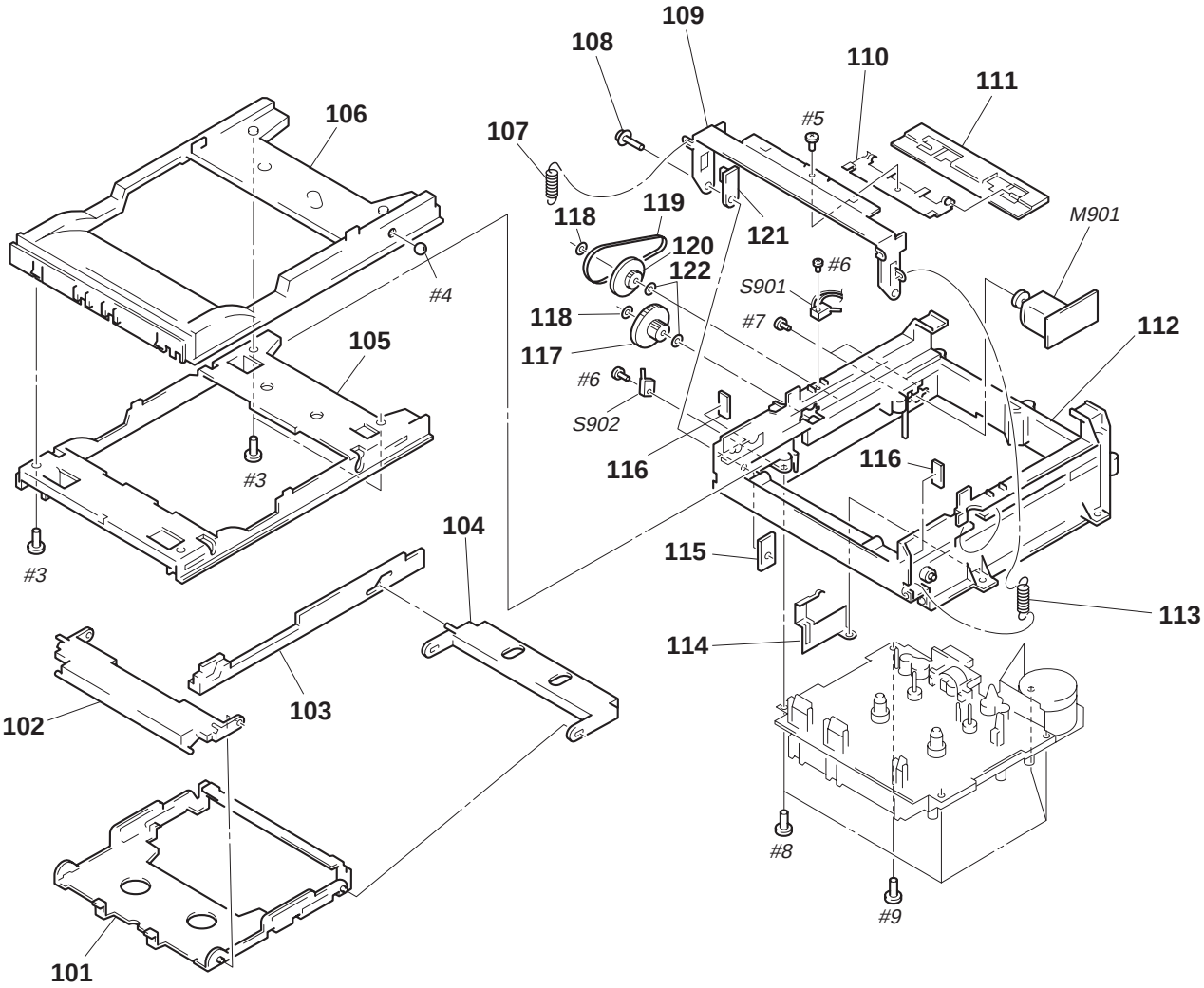

Ref. No.	Part No.	Description	Remark
101	3-017-214-01	HOLDER	
102	3-017-215-01	ARM (A)	
103	3-017-233-01	RACK, GEAR	
104	3-017-216-01	ARM (C)	
105	3-017-213-01	CHASSIS	
106	3-017-212-01	TRAY	
107	3-017-235-01	SPRING (A)	
108	3-017-244-01	SCREW (1.7X8.2), SPECIAL	
109	3-017-217-01	ARM (576)	
110	3-017-218-01	RETAINER	
111	3-017-219-01	PLATE	
112	3-017-211-01	FRAME	
113	3-017-236-01	SPRING (B)	
114	3-017-234-01	GROUND, PLATE	
115	3-017-243-01	NUT	
116	3-017-242-01	BUFFER	
117	3-017-232-01	GEAR (B)	
118	3-017-241-01	WASHER (1.6X4X0.5)	
119	3-017-237-01	BELT (49.2)	
120	3-017-231-01	PULLEY (C)	
121	3-017-220-01	ARM	
122	3-017-240-01	WASHER (2.1X4X0.5)	
M901	3-017-239-01	PULLEY (MOTOR) (LOADING)	
S901	3-017-238-01	LIMITTER (SW MSS-8B) (OPEN)	
S902	3-017-238-01	LIMITTER (SW MSS-8B) (CLOSE)	

(4) MECHANISM DECK SECTION-2 (TCM-ACLM578)

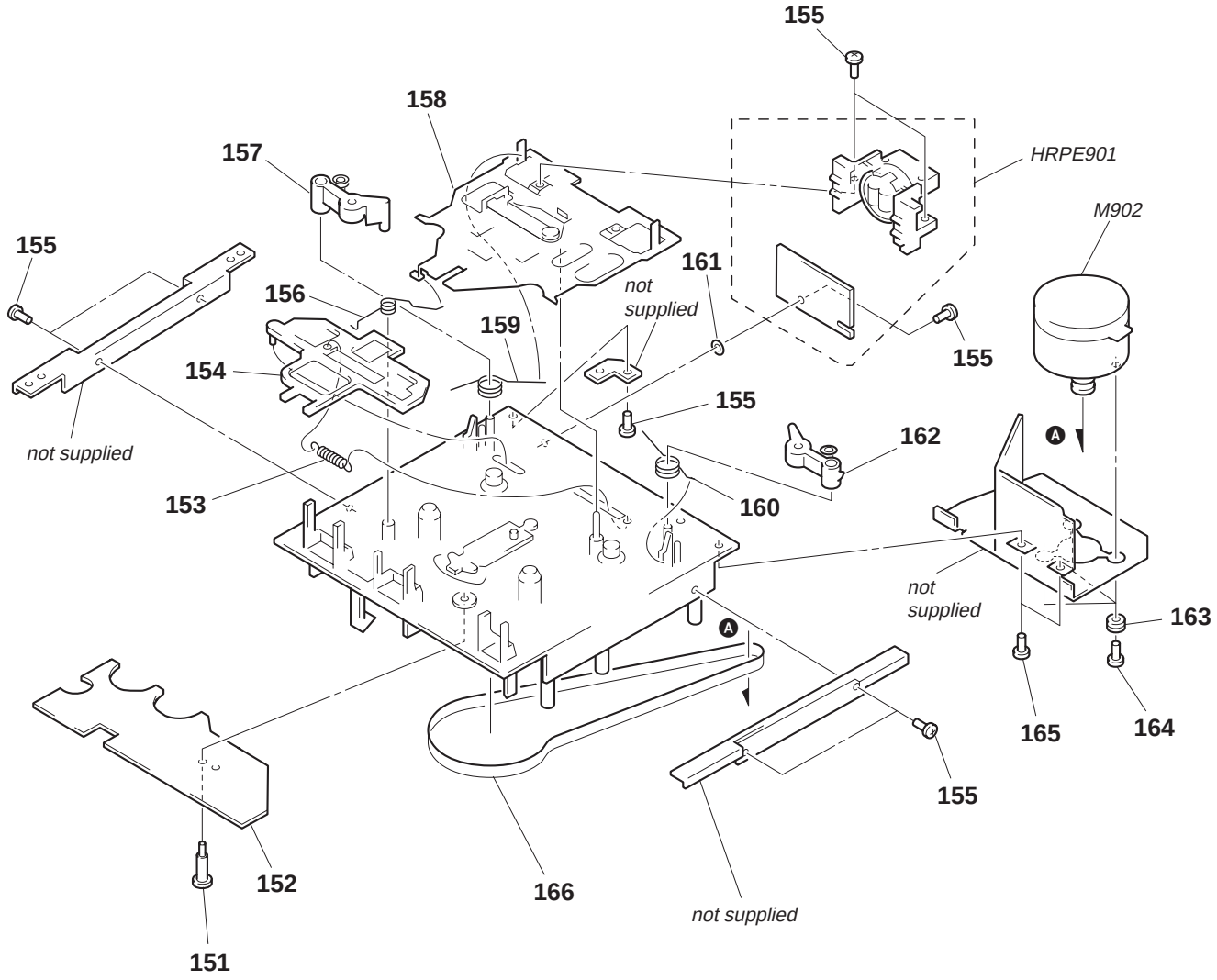

Ref. No.	Part No.	Description	Remark
151	3-017-294-01	SCREW (S), SPECIAL	
* 152		CONTROL BOARD	
153	3-017-273-01	LEVER AC, SPRING	
154	3-017-270-01	AC, LEVER	
155	3-017-279-01	SCREW (M2), SPECIAL	
156	3-017-274-01	HEAD, SPRING BASE	
157	3-017-254-01	PINCH ROLLER (F)	
158	3-017-253-01	CHASSIS (HEAD)	
159	3-017-277-01	PINCH (F), SPRING	
160	3-017-278-01	PINCH (R), SPRING	
161	3-017-300-01	WASHER, FLAT	
162	3-017-255-01	PINCH ROLLER (R)	
163	3-017-296-01	CUTION (MOTOR)	
164	3-017-297-01	SCREW (MOTOR)	
165	3-017-280-01	SCREW (M2 TAPPING), SPECIAL	
166	3-017-285-01	BELT (MAIN)	
HRPE901		HEAD ASSY (RECORD/PLAYBACK/ERASE)	
M902	3-017-259-01	PULLEY (MOTOR) (CAPSTAN/REEL)	

(5) MECHANISM DECK SECTION-3 (TCM-ACLM578)

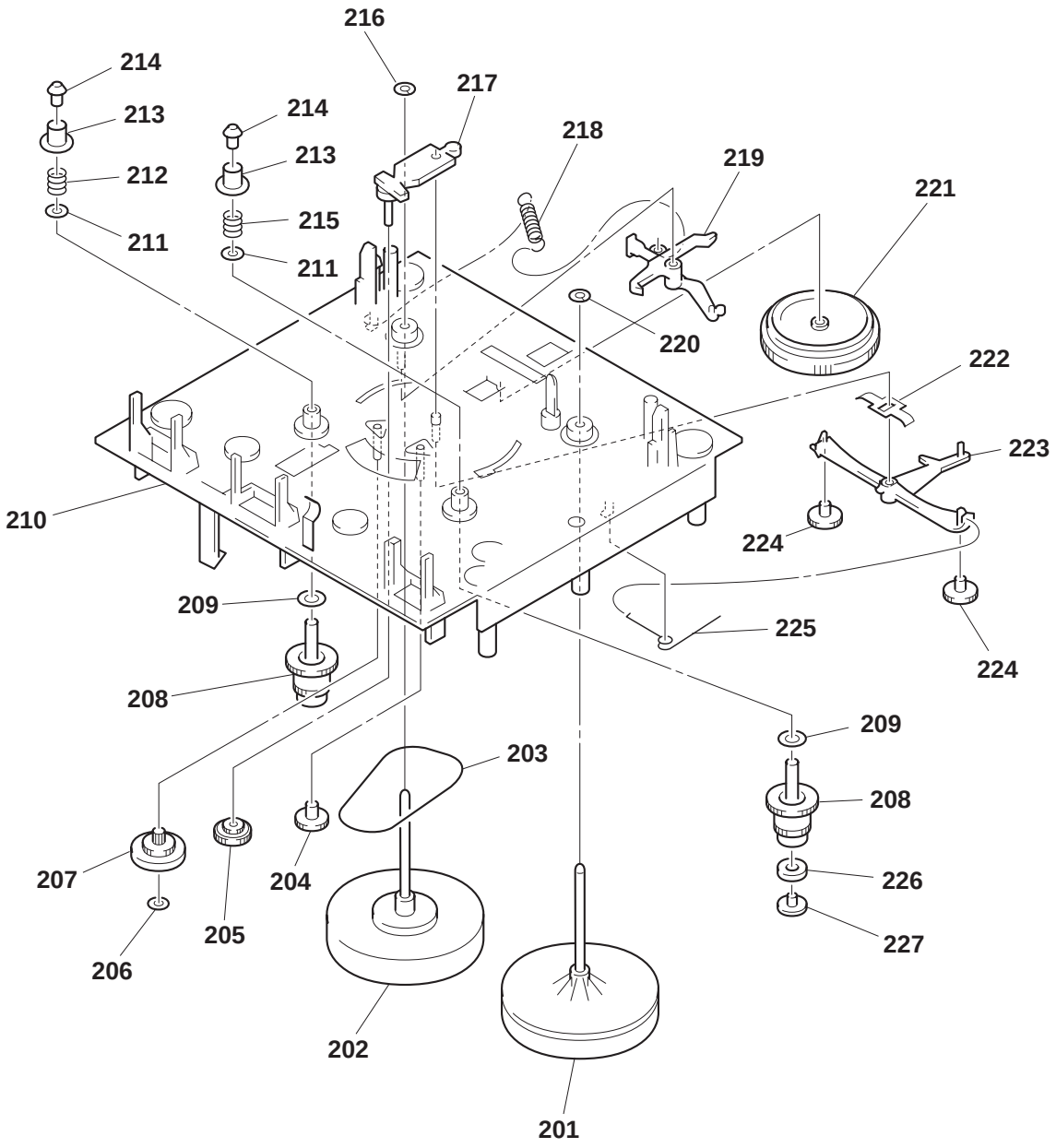

Ref. No.	Part No.	Description	Remark
201	3-017-258-01	FLYWHEEL (R)	
202	3-017-257-01	FLYWHEEL (F)	
203	3-017-284-01	BELT (SUB)	
204	3-017-265-01	IDLER, GEAR	
205		GEAR P ASSY	
206	3-017-283-01	WASHER, FLAT	
207		CLUTCH ASSY	
208	3-017-263-01	REEL, BASE	
209	3-017-295-01	WASHER, FLAT	
210	3-017-252-01	CHASSIS (OS)	
211	3-017-298-01	WASHER (B/T)	
212	3-017-299-01	SPRING (B/T) (F)	
213	3-017-288-01	REEL, CAP	
214	3-017-262-01	REEL, BUSHING	

Ref. No.	Part No.	Description	Remark
215	3-017-272-01	SPRING (BT) (R)	
216	3-017-281-01	WASHER, FLAT	
217	3-017-256-01	ARM (PLAY)	
218	3-017-275-01	LOCK, SPRING CAM	
219	3-017-267-01	LOCK, ARM CAM	
220	3-017-282-01	WASHER, FLAT	
221	3-017-264-01	CAM, GEAR	
222	3-017-266-01	BASE, LEVER	
223	3-017-268-01	ARM (RF)	
224	3-017-269-01	GEAR (RF)	
225	3-017-276-01	ARM (RF), SPRING	
226	3-017-293-01	MAGNET, PLATE	
227	3-017-271-01	CAP (MG)	

CONTROL | MAIN

SECTION 7
ELECTRICAL PARTS LIST

NOTE:

- Due to standardization, replacements in the parts list may be different from the parts specified in the diagrams or the components used on the set.
- -XX and -X mean standardized parts, so they may have some difference from the original one.
- RESISTORS
  All resistors are in ohms.
  METAL: Metal-film resistor.
  METAL OXIDE: Metal oxide-film resistor.
  F: nonflammable
- Items marked "*" are not stocked since they are seldom required for routine service.
  Some delay should be anticipated when ordering these items.
- SEMICONDUCTORS
  In each case, u: µ, for example:
  uA. . : µA. . uPA. . : µPA. .
  uPB. . : µPB. . uPC. . : µPC. .
  uPD. . : µPD. .
- CAPACITORS
  uF: µF
- COILS
  uH: µH

When indicating parts by reference number, please include the board.

Ref. No.	Part No.	Description				Remark
*		CONTROL BOARD				
		**********				
		< CONNECTOR >				
CN	3-017-287-01	TERMINAL (RP)				
		< DIODE >				
D	8-719-987-63	DIODE 1N418M				
D	8-719-987-63	DIODE 1N418M				
		< IC >				
IC	3-017-289-01	PLATE, ROTARY DETECTION				
		< PLUNGER SOLENOID >				
PM	3-017-292-01	SOLENOID				
		< RESISTOR >				
R	1-247-682-11	CARBBBON				
		< SWITCH >				
S	3-017-290-01	SWITCH, DETECT (FWD REC DET)				
S	3-017-290-01	SWITCH, DETECT (HALF DET)				
S	3-017-290-01	SWITCH, DETECT (Cr02 DET)				
S	3-017-290-01	SWITCH, DETECT (METAL DET)				
S	3-017-290-01	SWITCH, DETECT (REV REC DET)				
S	3-017-291-01	SWITCH, MODE (MODE)				
**********						
*	A-2007-721-A	MAIN BOARD, COMPLETE				
		**********				
*	3-309-144-21	HEAT SINK				
	7-685-871-01	SCREW +BVTT 3X6 (S)				
		< CAPACITOR >				
C101	1-126-963-11	ELECT	4.7uF	20%	50V	
C102	1-137-372-11	FILM	0.022uF	5%	50V	
C103	1-126-964-11	ELECT	10uF	20%	50V	
C104	1-136-165-00	FILM	0.1uF	5%	50V	
C105	1-136-163-00	FILM	0.068uF	5%	50V	
C106	1-126-964-11	ELECT	10uF	20%	50V	
C107	1-126-961-11	ELECT	2.2uF	20%	50V	
C111	1-126-960-11	ELECT	1uF	20%	50V	
C121	1-162-306-11	CERAMIC	0.01uF	20%	16V	
C122	1-162-306-11	CERAMIC	0.01uF	20%	16V	
C131	1-162-290-31	CERAMIC	470PF	10%	50V	
C132	1-162-282-31	CERAMIC	100PF	10%	50V	
C151	1-130-467-00	MYLAR	470PF	5%	50V	
C152	1-137-372-11	FILM	0.022uF	5%	50V	
C153	1-107-714-11	ELECT	10uF	20%	16V	
C154	1-107-610-11	CERAMIC	82PF	5%	500V	
C155	1-107-609-11	CERAMIC	75PF	5%	500V	
C156	1-102-820-00	CERAMIC	330PF	5%	50V	
C157	1-126-964-11	ELECT	10uF	20%	50V	
C158	1-126-960-11	ELECT	1uF	20%	50V	
C159	1-126-964-11	ELECT	10uF	20%	50V	
C160	1-162-282-31	CERAMIC	100PF	10%	50V	
C161	1-128-563-11	ELECT	100uF	20%	100V	
C162	1-128-563-11	ELECT	100uF	20%	100V	
C163	1-126-935-11	ELECT	470uF	20%	16V	
C164	1-126-935-11	ELECT	470uF	20%	16V	
C191	1-162-282-31	CERAMIC	100PF	10%	50V	
C201	1-126-963-11	ELECT	4.7uF	20%	50V	
C202	1-137-372-11	FILM	0.022uF	5%	50V	
C203	1-126-964-11	ELECT	10uF	20%	50V	
C204	1-136-165-00	FILM	0.1uF	5%	50V	
C205	1-136-163-00	FILM	0.068uF	5%	50V	
C206	1-126-964-11	ELECT	10uF	20%	50V	
C207	1-126-961-11	ELECT	2.2uF	20%	50V	
C211	1-126-960-11	ELECT	1uF	20%	50V	
C231	1-162-290-31	CERAMIC	470PF	10%	50V	
C232	1-162-282-31	CERAMIC	100PF	10%	50V	
C251	1-130-467-00	MYLAR	470PF	5%	50V	
C252	1-137-372-11	FILM	0.022uF	5%	50V	
C253	1-107-714-11	ELECT	10uF	20%	16V	
C254	1-107-610-11	CERAMIC	82PF	5%	500V	
C255	1-107-609-11	CERAMIC	75PF	5%	500V	
C256	1-102-820-00	CERAMIC	330PF	5%	50V	
C257	1-126-964-11	ELECT	10uF	20%	50V	
C258	1-126-960-11	ELECT	1uF	20%	50V	
C259	1-126-964-11	ELECT	10uF	20%	50V	
C260	1-162-282-31	CERAMIC	100PF	10%	50V	
C291	1-162-282-31	CERAMIC	100PF	10%	50V	
C301	1-126-964-11	ELECT	10uF	20%	50V	
C302	1-126-964-11	ELECT	10uF	20%	50V	
C303	1-162-282-31	CERAMIC	100PF	10%	50V	
C304	1-161-494-00	CERAMIC	0.022uF		25V	

Ref. No.	Part No.	Description				Remark
C305	1-162-217-31	CERAMIC	56PF	5%	50V	
C306	1-126-961-11	ELECT	2.2uF	20%	50V	
C307	1-126-961-11	ELECT	2.2uF	20%	50V	
C310	1-162-306-11	CERAMIC	0.01uF	20%	16V	
C311	1-162-306-11	CERAMIC	0.01uF	20%	16V	
C312	1-164-159-11	CERAMIC	0.1uF		50V	
C313	1-164-159-11	CERAMIC	0.1uF		50V	
C314	1-162-294-31	CERAMIC	0.001uF	10%	50V	
C315	1-162-294-31	CERAMIC	0.001uF	10%	50V	
C351	1-126-925-11	ELECT	470uF	20%	10V	
C352	1-126-925-11	ELECT	470uF	20%	10V	
C353	1-126-961-11	ELECT	2.2uF	20%	50V	
C354	1-126-933-11	ELECT	100uF	20%	16V	
C355	1-126-960-11	ELECT	1uF	20%	50V	
C356	1-137-370-11	FILM	0.01uF	5%	50V	
C357	1-137-436-11	FILM	0.0039uF	5%	50V	
C358	1-137-436-11	FILM	0.0039uF	5%	50V	
C360	1-126-961-11	ELECT	2.2uF	20%	50V	
C361	1-136-562-11	FILM	0.0082uF	5%	630V	
C701	1-126-943-11	ELECT	2200uF	20%	25V	
C702	1-126-943-11	ELECT	2200uF	20%	25V	
C703	1-126-960-11	ELECT	1uF	20%	50V	
C705	1-126-943-11	ELECT	2200uF	20%	25V	
C719	1-126-916-11	ELECT	1000uF	20%	6.3V	
C721	1-104-664-11	ELECT	47uF	20%	25V	
C722	1-164-159-11	CERAMIC	0.1uF		50V	
C801	1-126-964-11	ELECT	10uF	20%	50V	
C802	1-161-494-00	CERAMIC	0.022uF		25V	
C803	1-161-494-00	CERAMIC	0.022uF		25V	
C804	1-162-294-31	CERAMIC	0.001uF	10%	50V	
C805	1-126-916-11	ELECT	1000uF	20%	6.3V	
C806	1-126-963-11	ELECT	4.7uF	20%	50V	
C807	1-162-306-11	CERAMIC	0.01uF	20%	16V	
C808	1-126-935-11	ELECT	470uF	20%	16V	
C809	1-164-159-11	CERAMIC	0.1uF		50V	
C810	1-164-159-11	CERAMIC	0.1uF		50V	
C811	1-162-282-31	CERAMIC	100PF	10%	50V	
C812	1-126-964-11	ELECT	10uF	20%	50V	
C813	1-164-159-11	CERAMIC	0.1uF		50V	
C814	1-162-306-11	CERAMIC	0.01uF	20%	16V	
C815	1-126-933-11	ELECT	100uF	20%	10V	
C816	1-126-933-11	ELECT	100uF	20%	10V	
C817	1-164-159-11	CERAMIC	0.1uF		50V	
C819	1-126-969-11	ELECT	220uF	20%	50V	
C820	1-126-969-11	ELECT	220uF	20%	50V	
C821	1-126-969-11	ELECT	220uF	20%	50V	
C822	1-126-969-11	ELECT	220uF	20%	50V	
C823	1-162-306-11	CERAMIC	0.01uF	20%	16V	
C824	1-162-306-11	CERAMIC	0.01uF	20%	16V	
		< CONNECTOR >				
CN11	1-770-158-21	HOUSING, CONNECTOR 7P				(SYSTEM CONTROL)
* CN301	1-568-824-11	SOCKET, CONNECTOR 5P				
* CN351	1-564-707-11	PIN, CONNECTOR (SMALL TYPE) 5P				
* CN801	1-564-704-11	PIN, CONNECTOR (SMALL TYPE) 2P				
* CN802	1-568-842-11	SOCKET, CONNECTOR 27P				
* CN803	1-564-708-11	PIN, CONNECTOR (SMALL TYPE) 6P				

Ref. No.	Part No.	Description	Remark
* CN804	1-564-715-11	PIN, CONNECTOR (SMALL TYPE)13P	
		< DIODE >	
D101	8-719-987-63	DIODE 1N4148M	
D102	8-719-987-63	DIODE 1N4148M	
D201	8-719-987-63	DIODE 1N4148M	
D202	8-719-987-63	DIODE 1N4148M	
D301	8-719-987-63	DIODE 1N4148M	
D302	8-719-987-63	DIODE 1N4148M	
D303	8-719-987-63	DIODE 1N4148M	
D351	8-719-987-63	DIODE 1N4148M	
D352	8-719-987-63	DIODE 1N4148M	
D353	8-719-987-63	DIODE 1N4148M	
D354	8-719-987-63	DIODE 1N4148M	
D355	8-719-200-82	DIODE 11ES2	
D356	8-719-200-82	DIODE 11ES2	
D702	8-719-200-82	DIODE 11ES2	
D704	8-719-200-82	DIODE 11ES2	
D705	8-719-987-63	DIODE 1N4148M	
D706	8-719-987-63	DIODE 1N4148M	
D715	8-719-933-33	DIODE HZS6A1L	
D716	8-719-200-82	DIODE 11ES2	
D717	8-719-200-82	DIODE 11ES2	
D718	8-719-200-82	DIODE 11ES2	
D719	8-719-200-82	DIODE 11ES2	
D801	8-719-933-33	DIODE HZS6A1L	
D802	8-719-933-33	DIODE HZS6A1L	
D803	8-719-987-63	DIODE 1N4148M	
D804	8-719-987-63	DIODE 1N4148M	
D805	8-719-987-63	DIODE 1N4148M	
D806	8-719-933-33	DIODE HZS6A1L	
D807	8-719-987-63	DIODE 1N4148M	
D808	8-719-933-48	DIODE HZS7B3L	
D809	8-719-987-63	DIODE 1N4148M	
D810	8-719-987-63	DIODE 1N4148M	
D811	8-719-210-21	DIODE 11EQS04	
D812	8-719-200-82	DIODE 11ES2	
D813	8-719-200-82	DIODE 11ES2	
D814	8-719-200-82	DIODE 11ES2	
D815	8-719-200-82	DIODE 11ES2	
D816	8-719-200-82	DIODE 11ES2	
D817	8-719-200-82	DIODE 11ES2	
D818	8-719-200-82	DIODE 11ES2	
D820	8-719-002-09	DIODE UZL-18M	
		< GROUND TERMINAL >	
EPT01	1-537-770-21	TERMINAL BOARD, GROUND	
		< IC >	
IC301	8-752-060-46	IC CXA1561S	
IC302	8-759-634-51	IC M5218AP	
IC303	8-759-634-51	IC M5218AP	
IC304	8-752-060-64	IC CXA1198AP	
IC305	8-759-710-59	IC NJM4580D-D	
IC306	8-759-634-51	IC M5218AP	
IC703	8-759-604-35	IC M5F78M05L	
IC801	8-759-479-87	IC HD6433724E66F	
IC802	8-759-165-85	IC PST600H-T	

MAIN

Ref. No.	Part No.	Description				Remark
IC804	8-759-822-09	IC LB1641				
IC805	8-759-288-53	IC LA5617				
		< JACK >				
J301	1-770-720-11	JACK, PIN 4P (TAPE (IN/OUT))				
		< COIL >				
L151	1-410-780-11	INDUCTOR	27mH			
L251	1-410-780-11	INDUCTOR	27mH			
L351	1-414-223-11	INDUCTOR	470uH			
L352	1-414-223-11	INDUCTOR	470uH			
		< FILTER >				
LPF101	1-236-087-11	FILTER, LOW PASS				
LPF201	1-236-087-11	FILTER, LOW PASS				
		< TRANSISTOR >				
Q101	8-729-900-80	TRANSISTOR	DTC114ES			
Q102	8-729-620-05	TRANSISTOR	2SC2603-EF			
Q103	8-729-620-05	TRANSISTOR	2SC2603-EF			
Q104	8-729-620-05	TRANSISTOR	2SC2603-EF			
Q151	8-729-142-25	TRANSISTOR	2SD1020-HFE			
Q201	8-729-900-80	TRANSISTOR	DTC114ES			
Q202	8-729-620-05	TRANSISTOR	2SC2603-EF			
Q203	8-729-620-05	TRANSISTOR	2SC2603-EF			
Q204	8-729-620-05	TRANSISTOR	2SC2603-EF			
Q251	8-729-142-25	TRANSISTOR	2SD1020-HFE			
Q301	8-729-119-76	TRANSISTOR	2SA1175-HFE			
Q310	8-729-119-76	TRANSISTOR	2SA1175-HFE			
Q351	8-729-900-80	TRANSISTOR	DTC114ES			
Q352	8-729-422-57	TRANSISTOR	UN4111			
Q353	8-729-281-53	TRANSISTOR	2SC1815-GR			
Q354	8-729-194-57	TRANSISTOR	2SC945-P			
Q355	8-729-194-57	TRANSISTOR	2SC945-P			
Q356	8-729-900-80	TRANSISTOR	DTC114ES			
Q357	8-729-900-80	TRANSISTOR	DTC114ES			
Q358	8-729-900-80	TRANSISTOR	DTC114ES			
Q359	8-729-900-80	TRANSISTOR	DTC114ES			
Q360	8-729-900-80	TRANSISTOR	DTC114ES			
Q801	8-729-620-05	TRANSISTOR	2SC2603-EF			
Q803	8-729-422-57	TRANSISTOR	UN4111			
Q806	8-729-900-89	TRANSISTOR	DTC144ES			
Q809	8-729-140-97	TRANSISTOR	2SB734-34			
Q810	8-729-140-97	TRANSISTOR	2SB734-34			
Q811	8-729-140-97	TRANSISTOR	2SB734-34			
Q812	8-729-900-80	TRANSISTOR	DTC114ES			
Q813	8-729-900-80	TRANSISTOR	DTC114ES			
Q814	8-729-119-76	TRANSISTOR	2SA1175-HFE			
Q815	8-729-119-76	TRANSISTOR	2SA1175-HFE			
		< RESISTOR >				
R11	1-249-435-11	CARBON	33K	5%	1/4W	
R12	1-249-435-11	CARBON	33K	5%	1/4W	
R13	1-247-874-11	CARBON	62K	5%	1/4W	
R14	1-249-439-11	CARBON	68K	5%	1/4W	
R15	1-247-880-11	CARBON	110K	5%	1/4W	
R16	1-247-878-00	CARBON	91K	5%	1/4W	

Ref. No.	Part No.	Description				Remark
R21	1-247-870-11	CARBON	43K	5%	1/4W	
R22	1-249-438-11	CARBON	56K	5%	1/4W	
R23	1-247-884-11	CARBON	160K	5%	1/4W	
R24	1-247-872-11	CARBON	51K	5%	1/4W	
R25	1-247-883-00	CARBON	150K	5%	1/4W	
R26	1-247-887-00	CARBON	220K	5%	1/4W	
R41	1-249-438-11	CARBON	56K	5%	1/4W	
R42	1-247-876-11	CARBON	75K	5%	1/4W	
R43	1-249-439-11	CARBON	68K	5%	1/4W	
R44	1-247-876-11	CARBON	75K	5%	1/4W	
R45	1-247-876-11	CARBON	75K	5%	1/4W	
R46	1-249-441-11	CARBON	100K	5%	1/4W	
R101	1-249-441-11	CARBON	100K	5%	1/4W	
R102	1-249-441-11	CARBON	100K	5%	1/4W	
R103	1-249-429-11	CARBON	10K	5%	1/4W	
R104	1-249-421-11	CARBON	2.2K	5%	1/4W	
R105	1-247-843-11	CARBON	3.3K	5%	1/4W	
R106	1-247-843-11	CARBON	3.3K	5%	1/4W	
R107	1-249-428-11	CARBON	8.2K	5%	1/4W	
R108	1-249-417-11	CARBON	1K	5%	1/4W	
R109	1-249-418-11	CARBON	1.2K	5%	1/4W	
R110	1-249-433-11	CARBON	22K	5%	1/4W	
R111	1-249-417-11	CARBON	1K	5%	1/4W	
R112	1-247-866-11	CARBON	30K	5%	1/4W	
R113	1-249-439-11	CARBON	68K	5%	1/4W	
R114	1-249-410-11	CARBON	270	5%	1/4W	
R115	1-249-429-11	CARBON	10K	5%	1/4W	
R117	1-249-441-11	CARBON	100K	5%	1/4W	
R118	1-249-441-11	CARBON	100K	5%	1/4W	
R121	1-249-429-11	CARBON	10K	5%	1/4W	
R133	1-249-429-11	CARBON	10K	5%	1/4W	
R134	1-249-429-11	CARBON	10K	5%	1/4W	
R135	1-249-429-11	CARBON	10K	5%	1/4W	
R151	1-247-881-00	CARBON	120K	5%	1/4W	
R152	1-249-404-00	CARBON	82	5%	1/4W	
R153	1-247-882-11	CARBON	130K	5%	1/4W	
R154	1-247-850-11	CARBON	6.2K	5%	1/4W	
R155	1-249-430-11	CARBON	12K	5%	1/4W	
R156	1-249-426-11	CARBON	5.6K	5%	1/4W	
R157	1-249-421-11	CARBON	2.2K	5%	1/4W	
R158	1-247-843-11	CARBON	3.3K	5%	1/4W	
R159	1-249-429-11	CARBON	10K	5%	1/4W	
R160	1-249-421-11	CARBON	2.2K	5%	1/4W	
R162	1-249-413-11	CARBON	470	5%	1/4W	
R163	1-249-413-11	CARBON	470	5%	1/4W	
R201	1-249-441-11	CARBON	100K	5%	1/4W	
R202	1-249-441-11	CARBON	100K	5%	1/4W	
R203	1-249-429-11	CARBON	10K	5%	1/4W	
R204	1-249-421-11	CARBON	2.2K	5%	1/4W	
R205	1-247-843-11	CARBON	3.3K	5%	1/4W	
R206	1-247-843-11	CARBON	3.3K	5%	1/4W	
R207	1-249-428-11	CARBON	8.2K	5%	1/4W	
R208	1-249-417-11	CARBON	1K	5%	1/4W	
R209	1-249-418-11	CARBON	1.2K	5%	1/4W	
R210	1-249-433-11	CARBON	22K	5%	1/4W	
R211	1-249-417-11	CARBON	1K	5%	1/4W	
R212	1-247-866-11	CARBON	30K	5%	1/4W	
R213	1-249-439-11	CARBON	68K	5%	1/4W	
R214	1-249-410-11	CARBON	270	5%	1/4W	

Ref. No.	Part No.	Description			Remark
R215	1-249-429-11	CARBON	10K	5%	1/4W
R221	1-249-429-11	CARBON	10K	5%	1/4W
R233	1-249-429-11	CARBON	10K	5%	1/4W
R234	1-249-429-11	CARBON	10K	5%	1/4W
R235	1-249-429-11	CARBON	10K	5%	1/4W
R251	1-247-881-00	CARBON	120K	5%	1/4W
R252	1-249-404-00	CARBON	82	5%	1/4W
R253	1-247-882-11	CARBON	130K	5%	1/4W
R254	1-247-850-11	CARBON	6.2K	5%	1/4W
R255	1-249-430-11	CARBON	12K	5%	1/4W
R256	1-249-426-11	CARBON	5.6K	5%	1/4W
R257	1-249-421-11	CARBON	2.2K	5%	1/4W
R258	1-247-843-11	CARBON	3.3K	5%	1/4W
R259	1-249-429-11	CARBON	10K	5%	1/4W
R260	1-249-421-11	CARBON	2.2K	5%	1/4W
R301	1-215-452-00	METAL	20K	1%	1/4W
R302	1-249-429-11	CARBON	10K	5%	1/4W
R303	1-249-429-11	CARBON	10K	5%	1/4W
R304	1-249-437-11	CARBON	47K	5%	1/4W
R305	1-249-427-11	CARBON	6.8K	5%	1/4W
R306	1-247-843-11	CARBON	3.3K	5%	1/4W
R307	1-249-441-11	CARBON	100K	5%	1/4W
R308	1-249-429-11	CARBON	10K	5%	1/4W
R309	1-249-441-11	CARBON	100K	5%	1/4W
R310	1-249-417-11	CARBON	1K	5%	1/4W
R311	1-249-432-11	CARBON	18K	5%	1/4W
R312	1-249-436-11	CARBON	39K	5%	1/4W
R333	1-249-397-11	CARBON	22	5%	1/4W
R351	1-249-413-11	CARBON	470	5%	1/4W
R352	1-249-413-11	CARBON	470	5%	1/4W
R353	1-249-425-11	CARBON	4.7K	5%	1/4W
R354	1-247-838-00	CARBON	2K	5%	1/4W
R355	1-249-432-11	CARBON	18K	5%	1/4W
R356	1-249-432-11	CARBON	18K	5%	1/4W
R357	1-249-432-11	CARBON	18K	5%	1/4W
R358	1-249-390-11	CARBON	5.6	5%	1/4W
R359	1-249-390-11	CARBON	5.6	5%	1/4W
R360	1-249-427-11	CARBON	6.8K	5%	1/4W
R361	1-247-838-00	CARBON	2K	5%	1/4W
R362	1-215-454-00	METAL	24K	1%	1/4W
R363	1-249-441-11	CARBON	100K	5%	1/4W
R364	1-249-417-11	CARBON	1K	5%	1/4W
R701	1-249-417-11	CARBON	1K	5%	1/4W
R702	1-249-429-11	CARBON	10K	5%	1/4W
R720	1-249-437-11	CARBON	47K	5%	1/4W
R801	1-247-807-31	CARBON	100	5%	1/4W
R802	1-247-807-31	CARBON	100	5%	1/4W
R803	1-249-417-11	CARBON	1K	5%	1/4W
R804	1-249-429-11	CARBON	10K	5%	1/4W
R805	1-249-441-11	CARBON	100K	5%	1/4W
R806	1-247-843-11	CARBON	3.3K	5%	1/4W
R807	1-249-441-11	CARBON	100K	5%	1/4W
R808	1-249-441-11	CARBON	100K	5%	1/4W
R809	1-249-417-11	CARBON	1K	5%	1/4W
R810	1-249-429-11	CARBON	10K	5%	1/4W
R811	1-249-429-11	CARBON	10K	5%	1/4W
R812	1-249-417-11	CARBON	1K	5%	1/4W
R813	1-249-429-11	CARBON	10K	5%	1/4W

Ref. No.	Part No.	Description			Remark
R815	1-249-393-11	CARBON	10	5%	1/4W
R816	1-249-429-11	CARBON	10K	5%	1/4W
R817	1-249-429-11	CARBON	10K	5%	1/4W
R818	1-249-429-11	CARBON	10K	5%	1/4W
R819	1-249-417-11	CARBON	1K	5%	1/4W
R820	1-249-441-11	CARBON	100K	5%	1/4W
R821	1-247-807-31	CARBON	100	5%	1/4W
R822	1-247-807-31	CARBON	100	5%	1/4W
R823	1-249-429-11	CARBON	10K	5%	1/4W
R824	1-249-425-11	CARBON	4.7K	5%	1/4W
R827	1-249-413-11	CARBON	470	5%	1/4W
R828	1-249-429-11	CARBON	10K	5%	1/4W
R829	1-249-429-11	CARBON	10K	5%	1/4W
R830	1-249-429-11	CARBON	10K	5%	1/4W
R832	1-249-417-11	CARBON	1K	5%	1/4W
R835	1-249-429-11	CARBON	10K	5%	1/4W
R836	1-249-429-11	CARBON	10K	5%	1/4W
R837	1-249-429-11	CARBON	10K	5%	1/4W
R838	1-249-429-11	CARBON	10K	5%	1/4W
R839	1-249-429-11	CARBON	10K	5%	1/4W
R840	1-249-429-11	CARBON	10K	5%	1/4W
R841	1-249-429-11	CARBON	10K	5%	1/4W
R842	1-249-429-11	CARBON	10K	5%	1/4W
R845	1-249-429-11	CARBON	10K	5%	1/4W
R846	1-249-417-11	CARBON	1K	5%	1/4W
R849	1-249-427-11	CARBON	6.8K	5%	1/4W
R850	1-249-427-11	CARBON	6.8K	5%	1/4W
R863	1-247-807-31	CARBON	100	5%	1/4W
R864	1-247-807-31	CARBON	100	5%	1/4W
R865	1-247-807-31	CARBON	100	5%	1/4W
R870	1-247-807-31	CARBON	100	5%	1/4W
R871	1-249-440-11	CARBON	82K	5%	1/4W
R872	1-249-417-11	CARBON	1K	5%	1/4W
R873	1-247-807-31	CARBON	100	5%	1/4W
R874	1-247-807-31	CARBON	100	5%	1/4W
R875	1-249-430-11	CARBON	12K	5%	1/4W
		< VARIABLE RESISTOR >			
RV151	1-238-598-11	RES, ADJ, CARBON 2.2K			
RV152	1-238-603-11	RES, ADJ, CARBON 100K			
RV153	1-238-599-11	RES, ADJ, CARBON 4.7K			
RV251	1-238-598-11	RES, ADJ, CARBON 2.2K			
RV252	1-238-603-11	RES, ADJ, CARBON 100K			
RV253	1-238-599-11	RES, ADJ, CARBON 4.7K			
		< RELAY >			
RY351	1-515-614-11	RELAY			
		< TRANSFORMER >			
T351	1-429-316-11	TRANSFORMER, BIAS OSCILLATION			
		< VIBRATOR >			
X801	1-577-358-21	VIBRATOR, CERAMIC (4MHz)			

****

PANEL

Ref. No.	Part No.	Description				Remark
*	A-2007-722-A	PANEL BOARD, COMPLETE				
		**********				
*	4-932-810-01	CUSHION (FL)				
*	4-946-899-01	HOLDER (FL)				
		< CAPACITOR >				
C1	1-162-282-31	CERAMIC	100PF	10%	50V	
C2	1-162-282-31	CERAMIC	100PF	10%	50V	
		< CONNECTOR >				
* CN302	1-568-848-11	SOCKET, CONNECTOR 5P				
* CN852	1-568-869-11	SOCKET, CONNECTOR 27P				
		< DIODE >				
D851	8-719-057-09	DIODE LNJ801LPDJA (CD SYNC)				
		< FLUORESCENT INDICATOR TUBE >				
FLT851	1-517-317-21	INDICATOR TUBE, FLUORESCENT				
		< RESISTOR >				
R851	1-249-415-11	CARBON	680	5%	1/4W	
R852	1-249-417-11	CARBON	1K	5%	1/4W	
R853	1-249-419-11	CARBON	1.5K	5%	1/4W	
R854	1-247-843-11	CARBON	3.3K	5%	1/4W	
R855	1-249-425-11	CARBON	4.7K	5%	1/4W	
R856	1-249-415-11	CARBON	680	5%	1/4W	
R857	1-249-417-11	CARBON	1K	5%	1/4W	
R858	1-249-419-11	CARBON	1.5K	5%	1/4W	
R859	1-247-843-11	CARBON	3.3K	5%	1/4W	
R860	1-249-425-11	CARBON	4.7K	5%	1/4W	
R861	1-249-429-11	CARBON	10K	5%	1/4W	
R862	1-249-412-11	CARBON	390	5%	1/4W	
		< VARIABLE RESISTOR >				
RV301	1-225-383-11	RES, VAR, CARBON 50K/50K (REC LEVEL)				
		< SWITCH >				
S851	1-762-196-21	SWITCH, TACT (⏏ OPEN/CLOSE)				
S852	1-762-196-21	SWITCH, TACT (■)				
S853	1-762-196-21	SWITCH, TACT (❚❚)				
S854	1-762-196-21	SWITCH, TACT (▷)				
S855	1-762-196-21	SWITCH, TACT (◁)				
S856	1-762-196-21	SWITCH, TACT (CD SYNC)				
S858	1-762-196-21	SWITCH, TACT (◀◀)				
S859	1-762-196-21	SWITCH, TACT (▶▶)				
S860	1-762-196-21	SWITCH, TACT (● REC)				
S861	1-762-196-21	SWITCH, TACT (RESET)				
S862	1-762-196-21	SWITCH, TACT (DIRECTION)				
S863	1-762-196-21	SWITCH, TACT (DOLBY NR)				

****

Ref. No.	Part No.	Description	Remark
		MISCELLANEOUS	
		**********	
12	1-782-490-11	WIRE (FLAT TYPE) (5 CORE)	
13	1-773-257-11	WIRE (FLAT TYPE) (27 CORE)	
HRPE901		HEAD ASSY (RECORD/PLAYBACK/ERASE)	
M901	3-017-239-01	PULLEY (MOTOR) (LOADING)	
M902	3-017-259-01	PULLEY (MOTOR) (CAPSTAN/REEL)	
S901	3-017-238-01	LIMITTER (SW MSS-8B) (OPEN)	
S902	3-017-238-01	LIMITTER (SW MSS-8B) (CLOSE)	

****

		**********	
		HARDWARE LIST	
		**********	
#1	7-685-646-79	SCREW +BVTP 3X8 TYPE2 N-S	
#2	7-685-647-79	SCREW +BVTP 3X10 TYPE2 N-S	
#3	7-685-132-19	SCREW +P2.6X5 TYPE2 NON-SLIT	
#4	7-671-157-01	SCREW, PRECISION +P1.4X2	
#5	7-627-551-18	SCREW, PRECISION +P1.4X2	
#6	7-685-105-19	SCREW +P2X8 TYPE2 NON-SLIT	
#7	7-621-255-20	SCREW +P2X4	
#8	7-685-645-79	SCREW +BVTP 3X6 TYPE2 IT-3	
#9	7-685-146-11	SCREW +P3X8 TYPE2 NON-SLIT	

9-960-930-11

Sony Corporation
Home A&V Products Company

97D0573-1
Printed in Japan © 1997. 4
Published by General Engineering Dept. (Shibaura)