TC-20F/20FB

TC-20F: Silver Type

US Model
AEP Model
E Model

TC-20FB: Black Type

Canadian Model
AEP Model

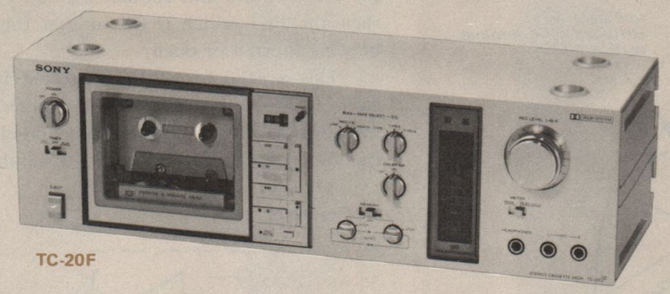

TC-20F

'Dolby' and the double-D symbol are the trade marks of Dolby Laboratories. Noise reduction system manufactured under license from Dolby Laboratories.

STEREO CASSETTE DECK

SPECIFICATIONS

GENERAL

Power Requirements: 120 V ac, 60 Hz (US, Canadian model)
220 V ac adjustable, 50/60 Hz (or 240 V ac by internal rewiring)(AEP model)
110, 120, 220 or 240 V ac adjustable, 50/60 Hz (E model)

Power Consumption: 25W

Dimensions: Approx. 430 (w) x 131 (h) x 161 (d) mm
17 (w) x 5¼ (h) x 6⅜ (d) inches
including projecting parts and controls

Weight: Approx. 7 kg, 15 lb 7 oz (US, Canadian model)
Approx. 7.2 kg, 15 lb 14 oz (E, AEP model)

— Continued on page 2 —

	Specifications	Test Equipment
Forward Torque	35–45 g·cm (0.49–0.62 oz·inch)	Sony torque meter CQ-102A
Back Tension Torque	2.5–5.5 g·cm (0.035–0.076 oz·inch)	Sony torque meter CQ-102A
Fast Forward and Rewind Torque	100–120 g·cm (1.39–1.66 oz·inch)	Sony torque meter CQ-201A
Tape Tension	more than 150 g (more than 5.3 oz)	Sony tape tension meter CQ-403
Pinch Roller Pressure	280–400 g (9.88–14.1 oz)	Spring scale or tension gauge

SAFETY-RELATED COMPONENT WARNING!!

COMPONENTS IDENTIFIED BY SHADING AND MARK ⚠ ON THE SCHEMATIC DIAGRAMS, EXPLODED VIEWS AND IN THE PARTS LIST ARE CRITICAL TO SAFE OPERATION. REPLACE THESE COMPONENTS WITH SONY PARTS WHOSE PART NUMBERS APPEAR AS SHOWN IN THIS MANUAL OR IN SUPPLEMENTS PUBLISHED BY SONY.

ATTENTION AU COMPOSANT AYANT RAPPORT À LA SÉCURITÉ!

LES COMPOSANTS IDENTIFIÉS PAR UNE TRAME ET UNE MARQUE ⚠ SUR LES DIAGRAMMES SCHÉMATIQUES, LES VUES EXPLOSÉES ET LA LISTE DES PIÈCES SONT CRITIQUES POUR LA SÉCURITÉ DE FONCTIONNEMENT. NE REMPLACER CES COMPOSANTS QUE PAR DES PIÈCES SONY DONT LES NUMÉROS SONT DONNÉS DANS CE MANUEL OU DANS LES SUPPLÉMENTS PUBLIÉS PAR SONY.

SONY®
SERVICE MANUAL

TAPE RECORDER SECTION

Recording System: 4-track 2-channel stereo

Fast-forward and Rewind Time: Approx. 110 seconds with Sony cassette C-60

Frequency Response: DOLBY NR OFF
With Ferri-Chrome cassette
20 – 17,000 Hz
30 – 15,000 Hz (±3 dB)
30 – 15,000 Hz (DIN)
With chromium dioxide cassette
20 – 16,000 Hz
30 – 15,000 Hz (±3 dB)
30 – 15,000 Hz (DIN)
With standard cassette
20 – 14,000 Hz
30 – 12,000 Hz (DIN)

Wow and Flutter: 0.045 % WRMS (NAB)
±0.16 % (DIN) (E, AEP model)

Total Harmonic Distortion: 1.3 % (with Ferri-Chrome cassette)

Bias Frequency: 105 kHz

S/N Ratio: DOLBY NR OFF
With Ferri-Chrome cassette
58 dB at peak level (NAB)
56 dB (DIN, 1975 rev.)
With chromium dioxide cassette
54 dB at peak level (NAB)
DOLBY NR ON
Improved by 5 dB at 1 kHz, 10 dB above 5 kHz

Inputs: MIC (two phono jacks)
sensitivity 0.3 mV (–68 dB) for a low-impedance microphone
LINE IN (two phono plugs)
sensitivity 70 mV (–21 dB) input impedance 50 kΩ

Outputs: LINE OUT (two phono plugs)
output level 0.435 V (–5 dB) at load impedance 50 kΩ
suitable load impedance more than 10 kΩ
HEADPHONES (binaural jack)
load impedance 8 Ω

• MODEL IDENTIFICATION

— Label Specification —

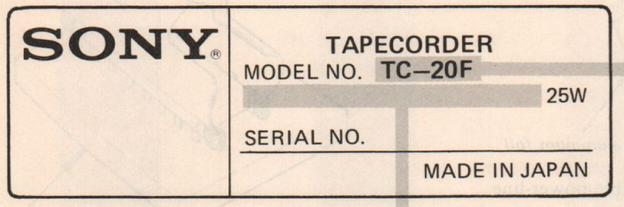

US model:	AC 120 V 60 Hz	TC-20F
Canadian model:	AC 120 V 60 Hz	TC-20FB
E model:	AC 110, 120, 220, 240 V ~ 50/60 Hz	TC-20F
AEP model:	AC 220 V ~ 50/60 Hz	TC-20F or TC-20FB

Handling Precautions for MOS ICs (CX551)

Generally, the insulation resistance of the oxide layer in MOS IC structures is very high, and the oxide layer is very thin. Because of this, it is possible that the static voltages usually present on clothes and the human body will be enough to generate a potential difference across the insulator, high enough to cause a breakdown of the insulating layer.

The following precautions should be taken while handling these ICs.

(Particular care should be taken under conditions of low humidity.)

Precautions in Replacing MOS ICs

1. Store new ICs by inserting them into a urethane-polyester cushion (which is somewhat conductive), or wrapping it in aluminum foil, so that all the pins are at the same potential.
   (The ICs should be stored in that manner until mounted on the circuit board.)

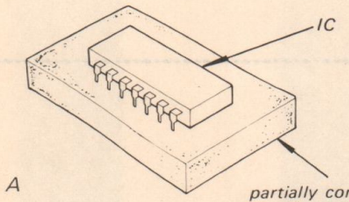

Fig. A

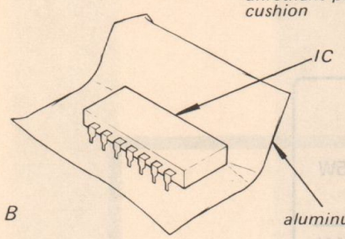

Fig. B

2. Check the soldering iron for possible power-line leakage current. Make sure that there is no leakage path by connecting an ohmmeter to the tip of the soldering iron and the plug as shown in Fig. C. If there is a leakage path, use some other soldering iron.

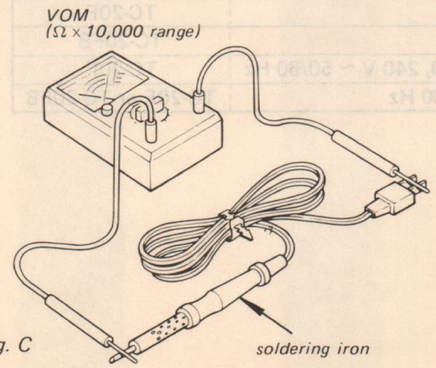

Fig. C

3. Equalize any potential difference between the clothes, the tools in use, the work bench, the set being worked on, and the packaged IC by touching them all in succession with the hands or a conductive wire or tool.

4. The following are effective methods for handling ICs that remove the potential difference across the oxide layer.
   - Use a paper clip modified by soldering in a wire braid insert.

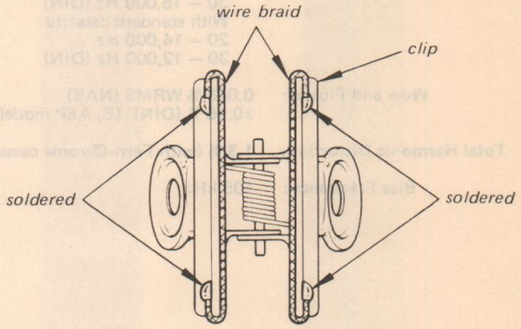

Fig. D

Make sure that there is no solder on the inside.

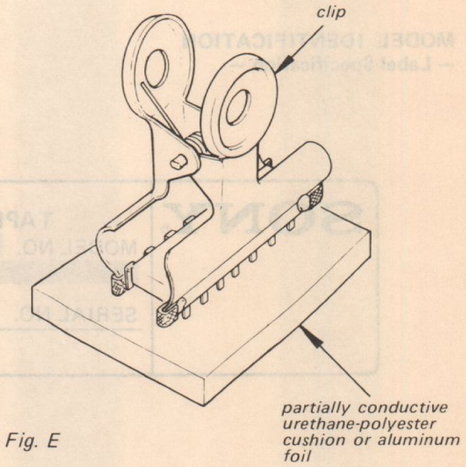

Fig. E

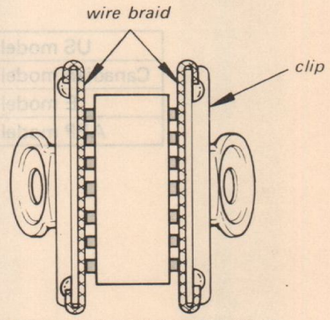

Fig. F

Make sure that all the pins are in contact with the wire braid (all the pins will then be at the same potential.).

- Take a short length of fine bare wire and wind it around the IC so that it shorts all the pins of the IC, while it is still in the urethane-polyester cushion or aluminum foil. This ensures that all the pins are at the same potential.

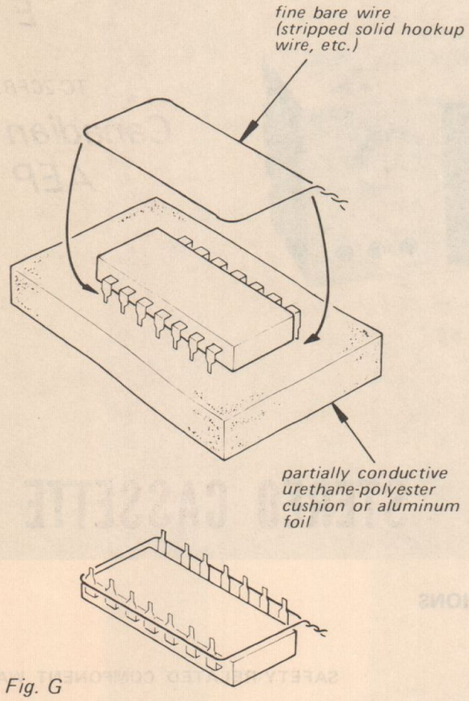

Fig. G

- When it is necessary to handle the IC with the fingers, do not touch any pin, and hold the IC at the ends of its plastic-package case as shown in Fig. H.

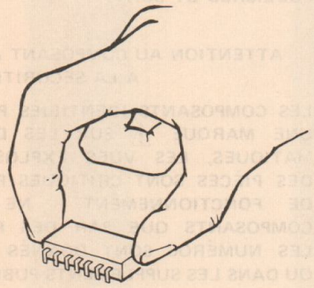

Fig. H

5. Method of Mounting
   Insert the IC while holding it with the modified clip, and solder all the pins with the clip still shorting the pins. (Similarly, solder all the pins while the bare shorting wire is still wound around them.). Remove the clip or the bare shorting wire only after all the pins have been soldered.

Precaution while Checking C-MOS ICs

The C-MOS ICs (Complementary MOS) are MOS ICs that have their output sections made up of N-channel and P-channel push-pull stages to increase their speed of operation. If the output terminal of these ICs comes into contact with B+ or B– voltage, then the FET which is ON at that time will either become shorted or open.

This is valid for all the output sections that are connected together by the interconnections. Even the circuits that are physically separated (and not on the same board) can be destroyed simultaneously.

Example:

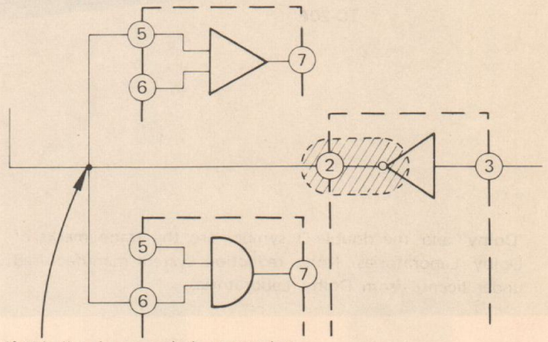

If this line is grounded, or touches B+ or B– bus . . . , the output stage of this IC will be destroyed.

Fig. I

SECTION 1
OUTLINE

1-1. CIRCUIT DESCRIPTION

1. CX551 (IC702)

CX551 (IC702) is a C-MOS LSI used in the logic control circuit of cassette tape decks. Refer to "Handling Precautions for MOS ICs" on page 3.

The features of the logical control are as follows :

- Mode is selected by the input, which is dropped to a L (low) level.
- The circuit does not function when two or more buttons are pressed at the same time, thus preventing malfunctions.
- It is possible to switch from one mode directly to another. A STOP circuit cancels the existing mode before the new mode is assumed.
- Each output terminal contains a bipolar transistor. This allows a larger current flow for driving the motor and solenoid, and permits the LED to be lighted directly.

1-1. Block Diagram of IC

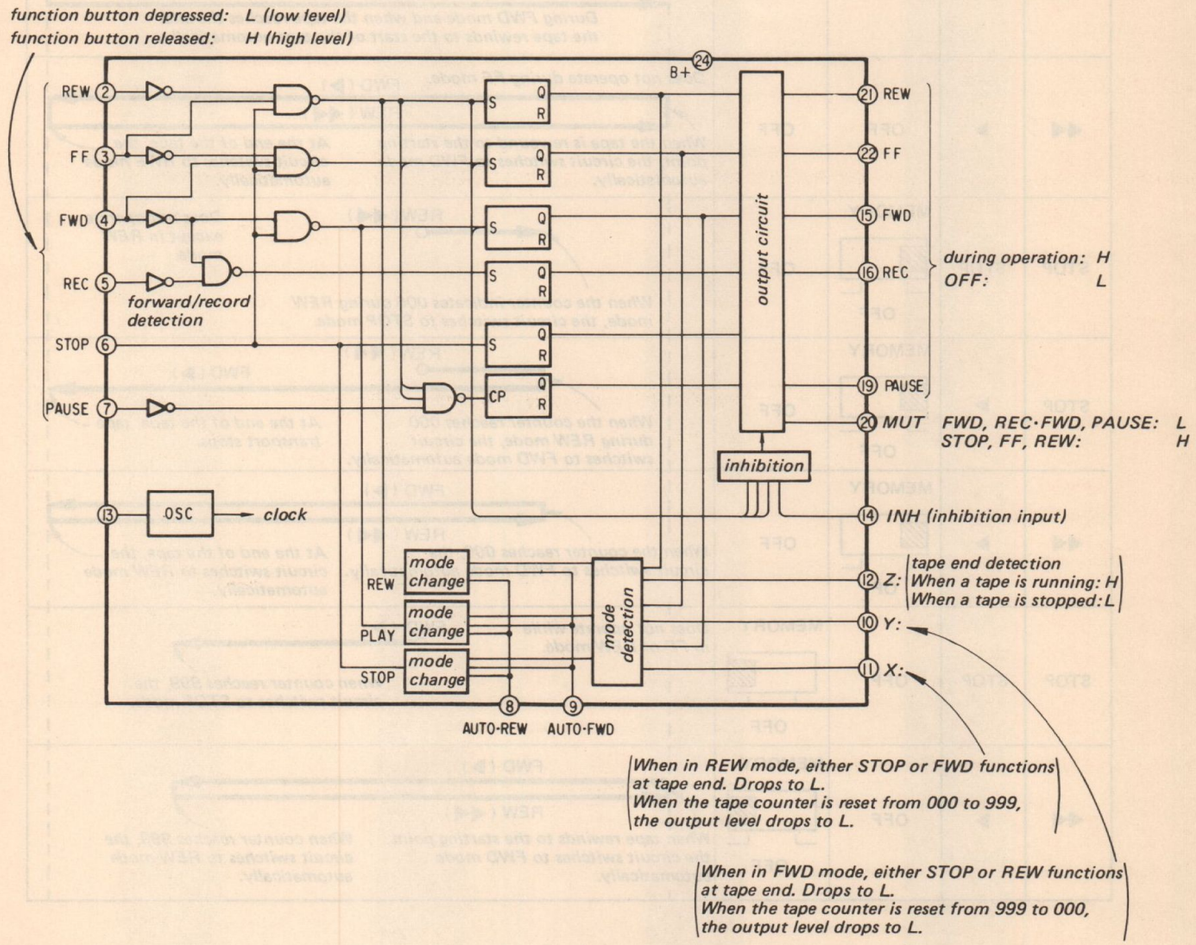

Fig. 1

1) AUTO REW (Terminal ⑧)

When the output level at Y or Z drops to L during FWD mode, then:

- When AUTO REW is OFF, the tape stops running.
- When AUTO REW is ON, the tape stops running and is rewound automatically.

When the output signal at Z drops to L during FF, the tape stops, whether or not AUTO REW is engaged.

2) AUTO FWD (Terminal ⑨)

When the output level at X or Z drops to L during REW mode, then:

- When AUTO FWD is OFF, the tape stops running.
- When AUTO FWD is ON, the tape stops running and then starts running forward automatically.

3) X (Terminal ⑪)

The output level at this terminal chooses the STOP or FWD mode during REW mode. When the tape counter runs from 000 to 999, the level drops to L. This terminal does not operate except in REW mode.

4) Y (Terminal ⑩)

The output level at this terminal chooses the STOP or REW mode during FWD mode. The output level drops to L when the tape counter reaches 999. This terminal does not operate except in FWD mode.

5) Z (Terminal ⑫)

Input at this terminal detects the movement of the tape. While the tape is running, this terminal is at H-level; when the tape stops, it instantly drops to L-level.

1-2. Operations when two or more buttons are pushed at the same time

①Desired mode	②Buttons which should not be pressed at the same time.	Output mode when ① and ② are pushed together
STOP	REW, FF, FWD, REC, PAUSE	STOP
FF	REW, FWD	STOP
	REC, PAUSE	FF
REW	FF, FWD	STOP
	REC, PAUSE	REW
FWD	PAUSE	playback pause
REC	FWD	REC FWD
	PAUSE	PAUSE
	FWD and PAUSE	recording pause

1-3. Operation timing responding to the input from each terminal

When modes are switched, IC702 cancels the existing mode when the STOP circuit operates for a brief moment. This operation is shown in the following diagram.

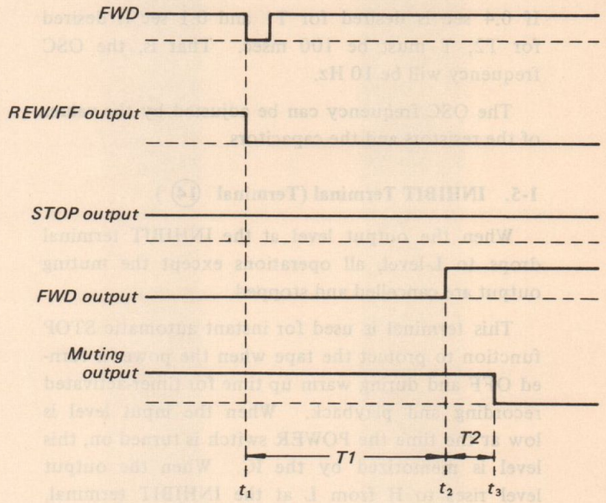

Fig. 2

When FWD button is pushed during REW, REW output level drops instantly to L. After T1 seconds, FWD output level rises to H. After T2, muting output level drops to L. T1 and T2 are decided by the values of the capacitors and the resistors. Terminals with outputs passing through the STOP circuit mentioned above are the FWD, REC, REW, FF and Muting terminals. STOP terminal keeps H-level when the mode is changed as shown in the diagram above.

Each output, when released from recording pause and playback pause, changes instantly when the PAUSE button is pushed.

1-4. OSC Circuit

The frequency of the OSC Circuit is decided as follows:
When the OSC frequency is T, the lag time from input to output mentioned on page 6, T1 and T2, is set as follows:

T1 = 4 x T T2 = T

If 0.4 sec is desired for T1 and 0.1 sec is desired for T2, T must be 100 msec. That is, the OSC frequency will be 10 Hz.

The OSC frequency can be adjusted by the values of the resistors and the capacitors.

1-5. INHIBIT Terminal (Terminal ⑭)

When the output level at the INHIBIT terminal drops to L-level, all operations except the muting output are cancelled and stopped.

This terminal is used for instant automatic STOP function to protect the tape when the power is turned OFF and during warm up time for timer-activated recording and playback. When the input level is low at the time the POWER switch is turned on, this level is memorized by the IC. When the output level rises to H from L at the INHIBIT terminal, the output of the mode is generated.

1-6. The Tape Counter

The tape counter of this model has an attached magnet for detecting rotation of the counter and an off-on switch which functions as follows:

1) When tape unwinds to the end or rewinds to the starting point, the counter magnet stops rotating. SDME detects this and the input level at terminal ⑫ of IC702 drops to L. While the counter magnet is normally rotating, the input level at terminal ⑫ is H.
2) The switch turns ON between 999 and 000. By using this system AUTO REW and AUTO FWD are affected.

1-7. AUTO FWD, AUTO REW, and MEMORY Switch Operations

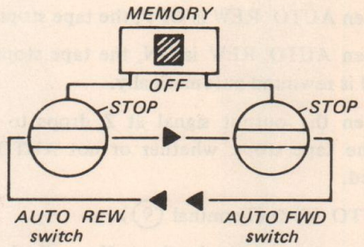

Fig. 3

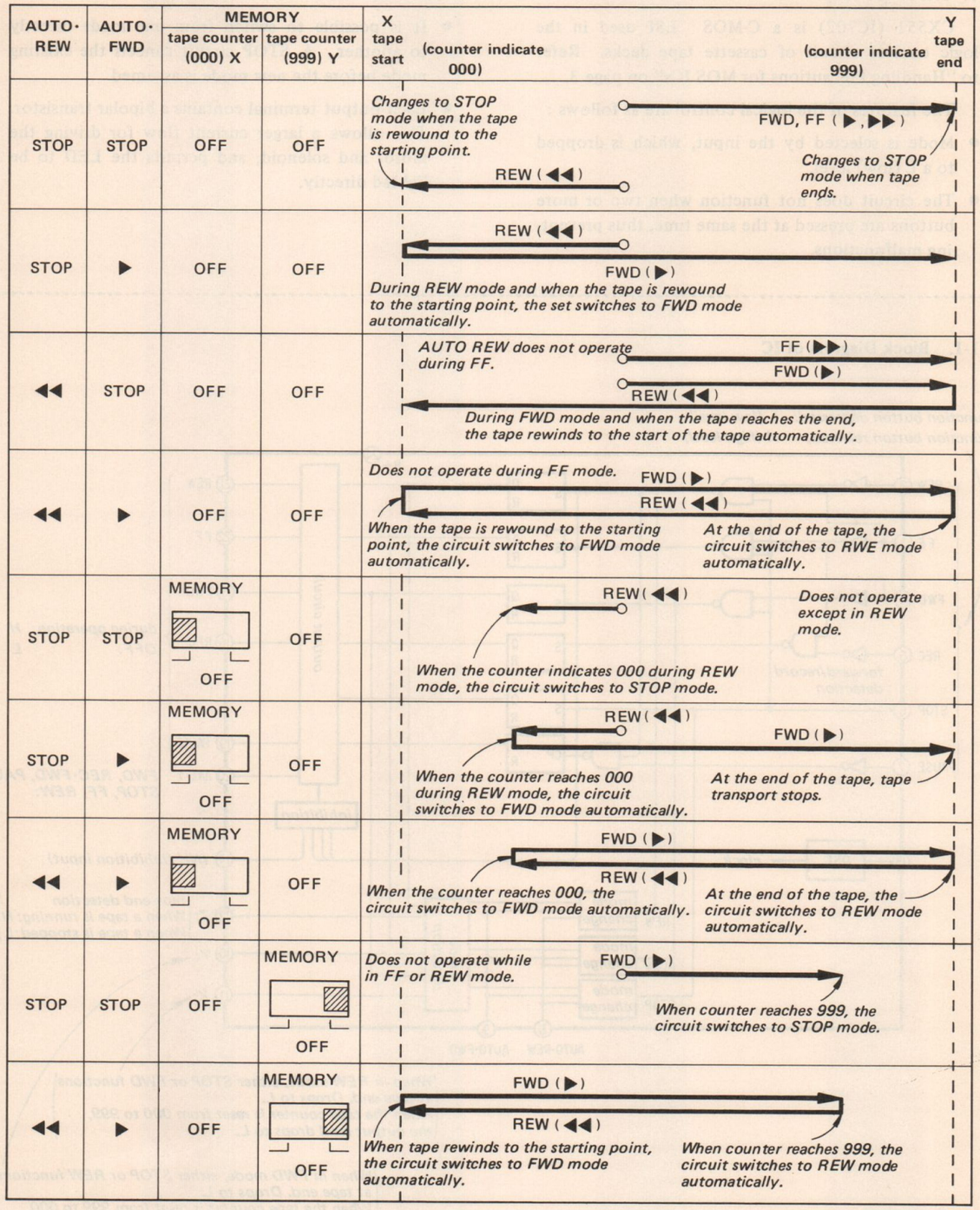

Fig. 4

2. Meter Amplifier Circuit

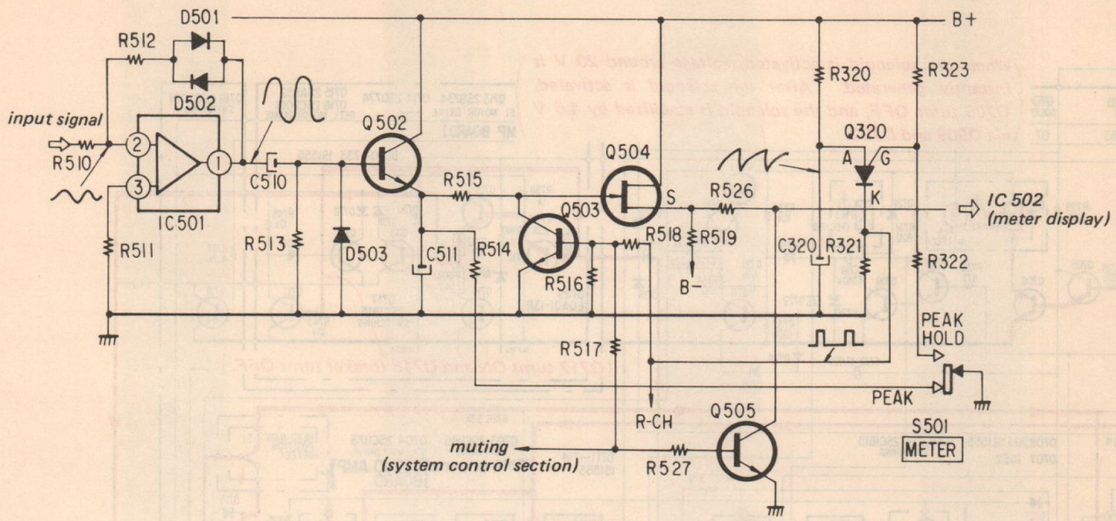

Fig. 5

To indicate dB's by a meter, a log amplifier is necessary. This circuit consists of IC501, D501, 502 and R512. (Fig. 6 shows the change between input and output when the value of R512 changes.)

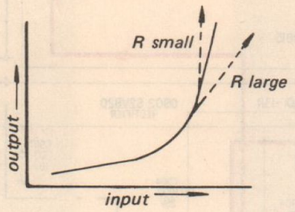

Fig. 6

The signal applied to terminal (2) of IC501 is log amplified and is fed to terminal (1). This signal is applied to the meter circuit after passing through Q502 and Q504. Operations of PEAK and PEAD HOLD are as follows:

1) During PEAK

Output from terminal (1) of IC501 is rectified at D503 and Q502 and charged at C511. R514 is grounded by the METER switch (S501) during PEAK, so the charged voltage at C511 is discharged within a certain time via R514.

2) During PEAK HOLD

R514 is shunted out by the METER switch (S501-1). As the charged voltage at C511 does not have a discharge route, it holds peak for a long time. (Since Q504 is a FET, its input impedance is very high.)

If C511 were not discharged, this would be indicated on the meter. C511 would eventually discharge inappropriately within a short period of time. PEAK HOLD operation is done by Q320.

3) Q320 (PUT)

Q320 is a Programmable Unijunction Transistor. PUT is a switching element which consists of an NPN and a PNP transistor in one silicon wafer as shown below. It is kept stabilized in ON or OFF mode by the bias between A and K. Q320 is an inverted blocking, 3 terminal, N gate thyristor. (When the voltage at G drops 0.3–0.4 V below the voltage at A, the circuit between A and G turns ON.)

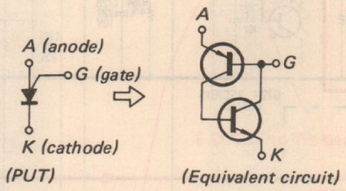

Fig. 7

R322 is grounded via METER switch (S501-1), so a certain voltage is applied to the gate of Q320. When the voltage at anode becomes 0.6 V higher than the voltage at this gate, Q320 turns ON and the circuit between the anode and cathode and the circuit between the gate and cathode turns ON.

C320 is charged through R320, and when this charged voltage becomes 0.6 V higher than the voltage at the gate, current flows between the anode and cathode. The charged voltage at C320 passes through the anode and cathode of Q320 and is discharged onto R321. By this pulse, Q503 is either switched ON or OFF. When Q503 turns ON, the charged voltage of C511 is discharged. When Q503 turns OFF, C511 is charged again. (This takes about 1.7 sec.)

4) Q503 (Q603)

Record/playback amplifier output is muted during FF and REW modes. When record/playback muting is in operation, the meter circuit is muted by Q503 (Q603), so that there is no output at the meter.

3. Solenoid Drive Circuit

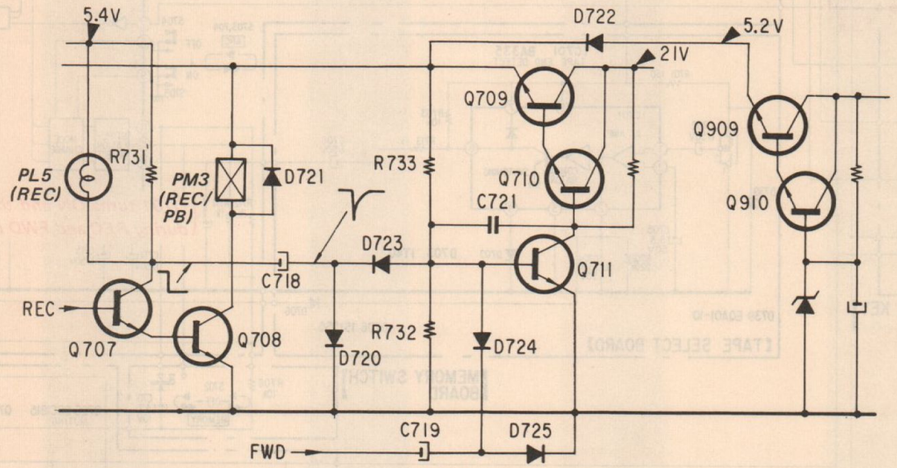

Fig. 8

1) Q709, 710 and 711 activate the solenoid. After the solenoid starts activating, a voltage is applied through Q909 keeps the solenoid activating. To activate the solenoid, a rather high voltage is first necessary, but after it is activated, it can be maintained with a lower voltage.

2) When the REC button is pushed, a voltage is applied to Q707 through the system control circuit and turns Q707 on.

3) When Q707 turns ON, Q708 also turns ON, and activates the solenoid.

4) When Q707 turns ON, a negative pulse is applied to the base of Q711 via C718 and D723, and Q711 turns OFF.

5) When Q711 turns OFF, the base voltages of Q710 and Q709 rises and Q709 turns ON. Thus, voltage is applied to PM3 and it activates.

6) When PM3 is activated, the negative side of C718 is charged by R733, D723 and 720. After charging, the voltage at the negative side of C718 rises and, Q711 turns ON again.

7) When Q711 turns ON, the base voltage of Q710 drops, and the emitter voltage of Q709 also drops.

8) When the emitter voltage of Q709 drops, PM3 is stabilized by the voltage from the emitter of Q909 via D722. The explanation for PM1 is same as for PM3.

9) PM2 is the solenoid for the head deck. When the head deck operates, S1 switches over. This switch (S1) changes the voltage as PM1 and PM3 do.

4. Operations when each button is pushed.

4-1. FWD

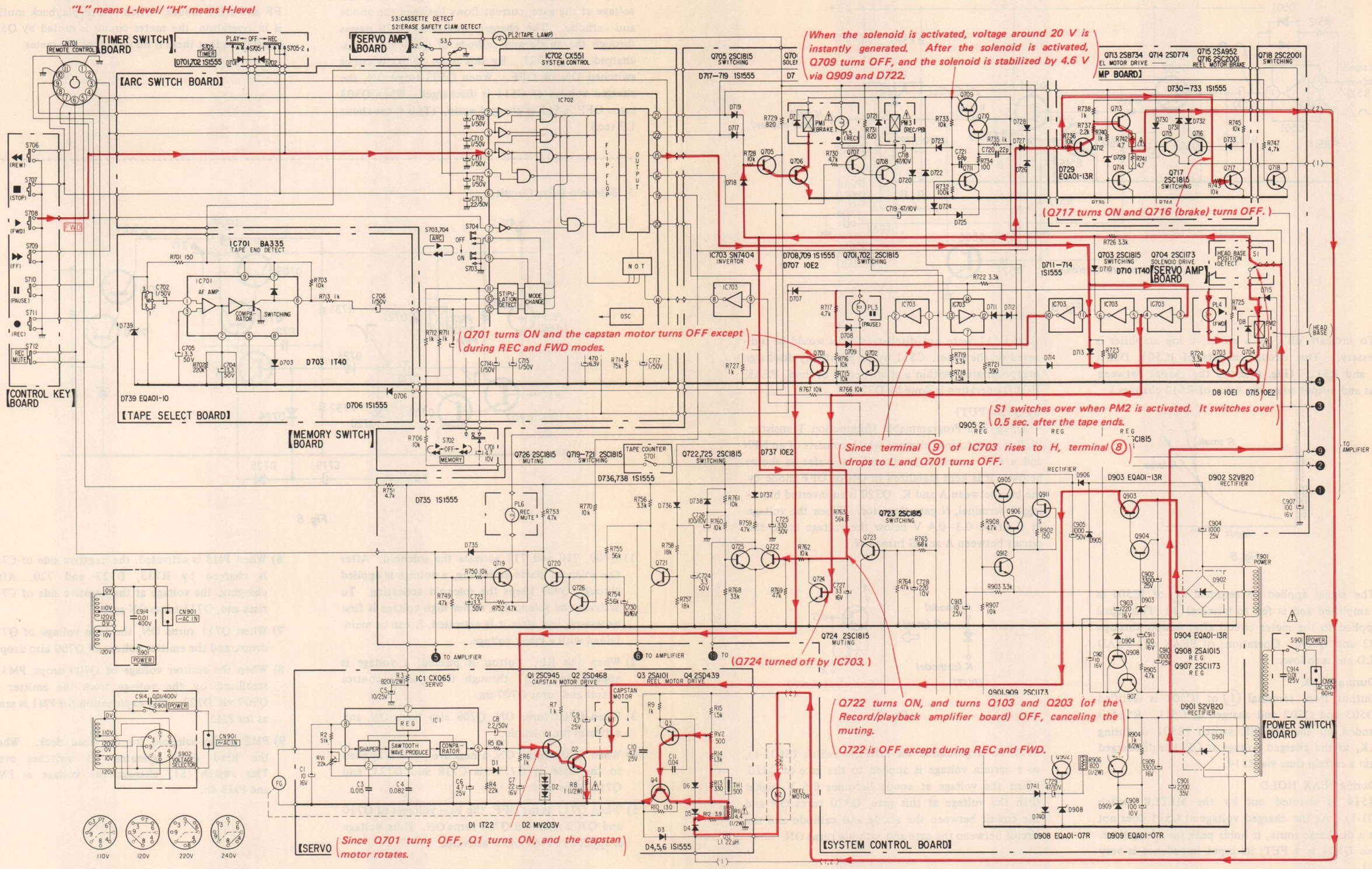

4-2. FF

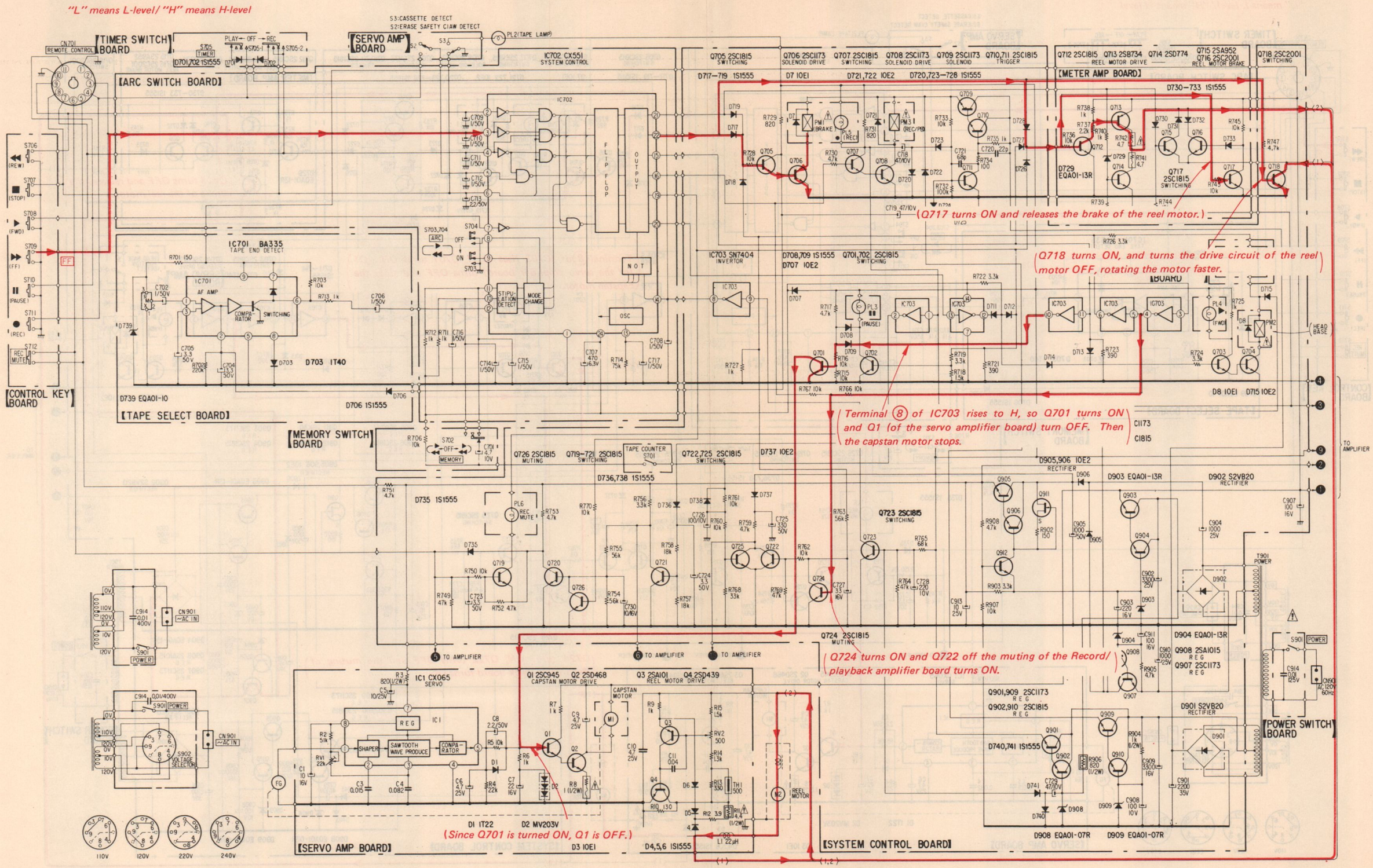

4-3. REW

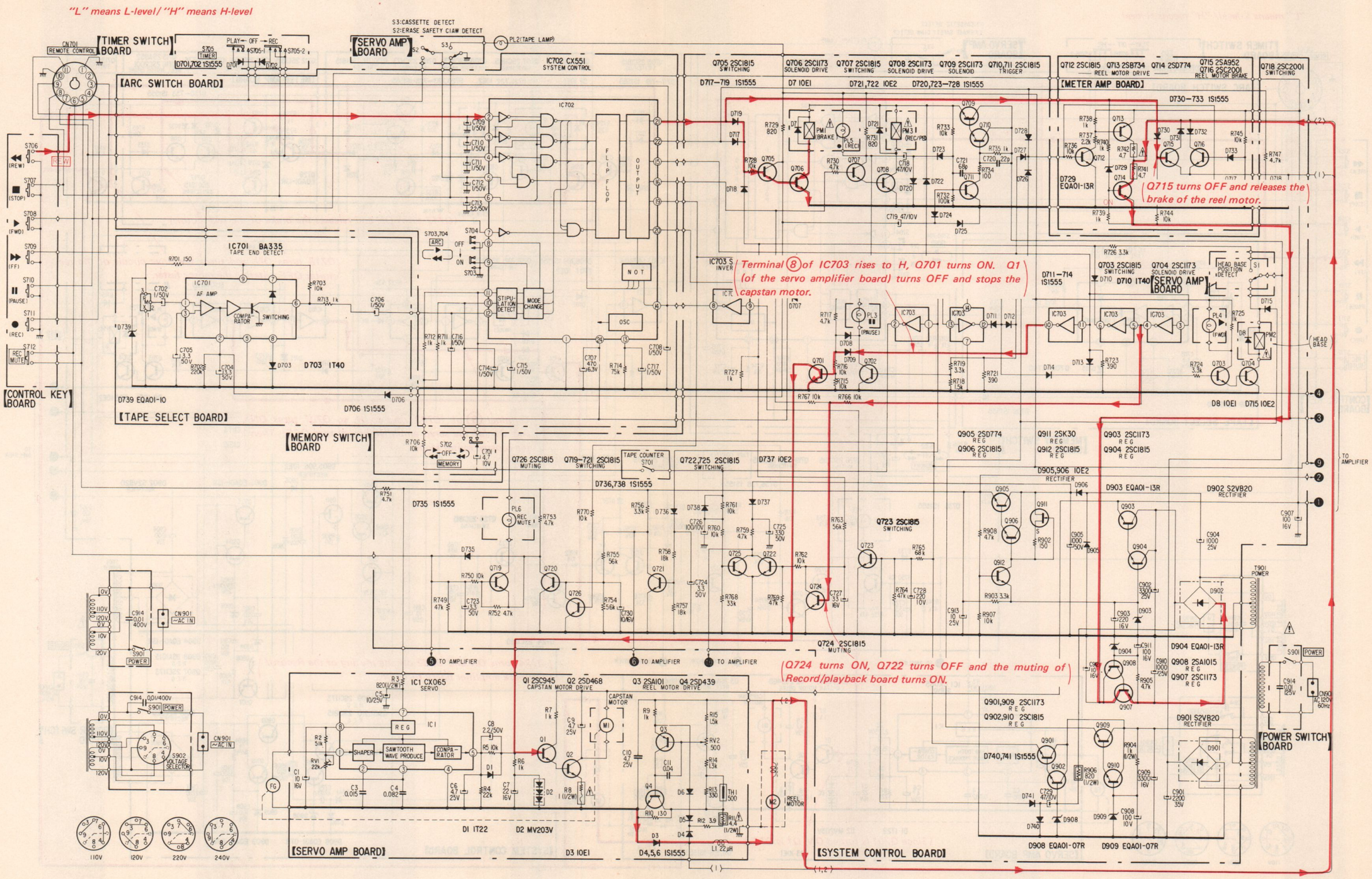

4-4. REC and REC MUTE

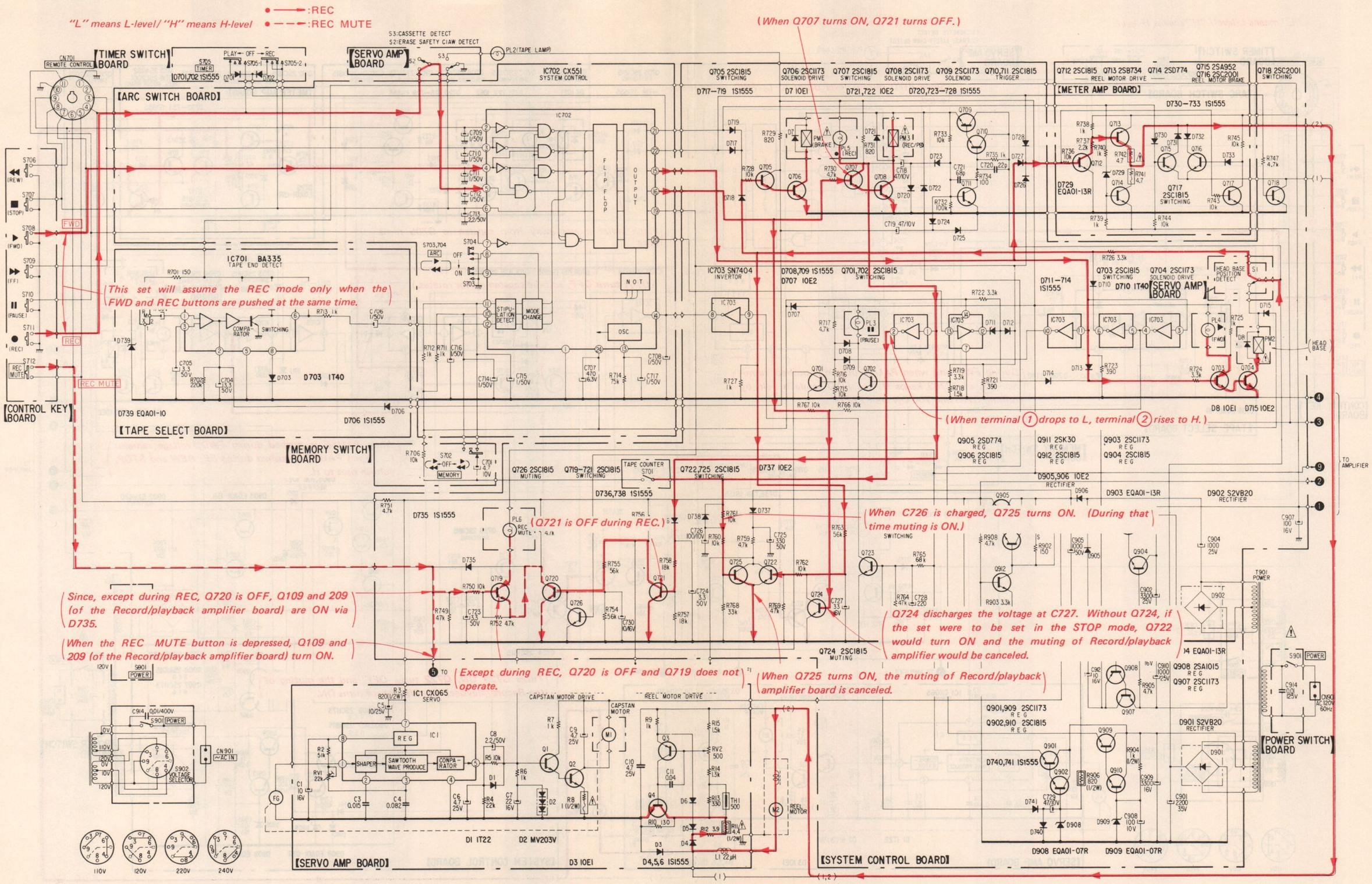

4-5. PAUSE

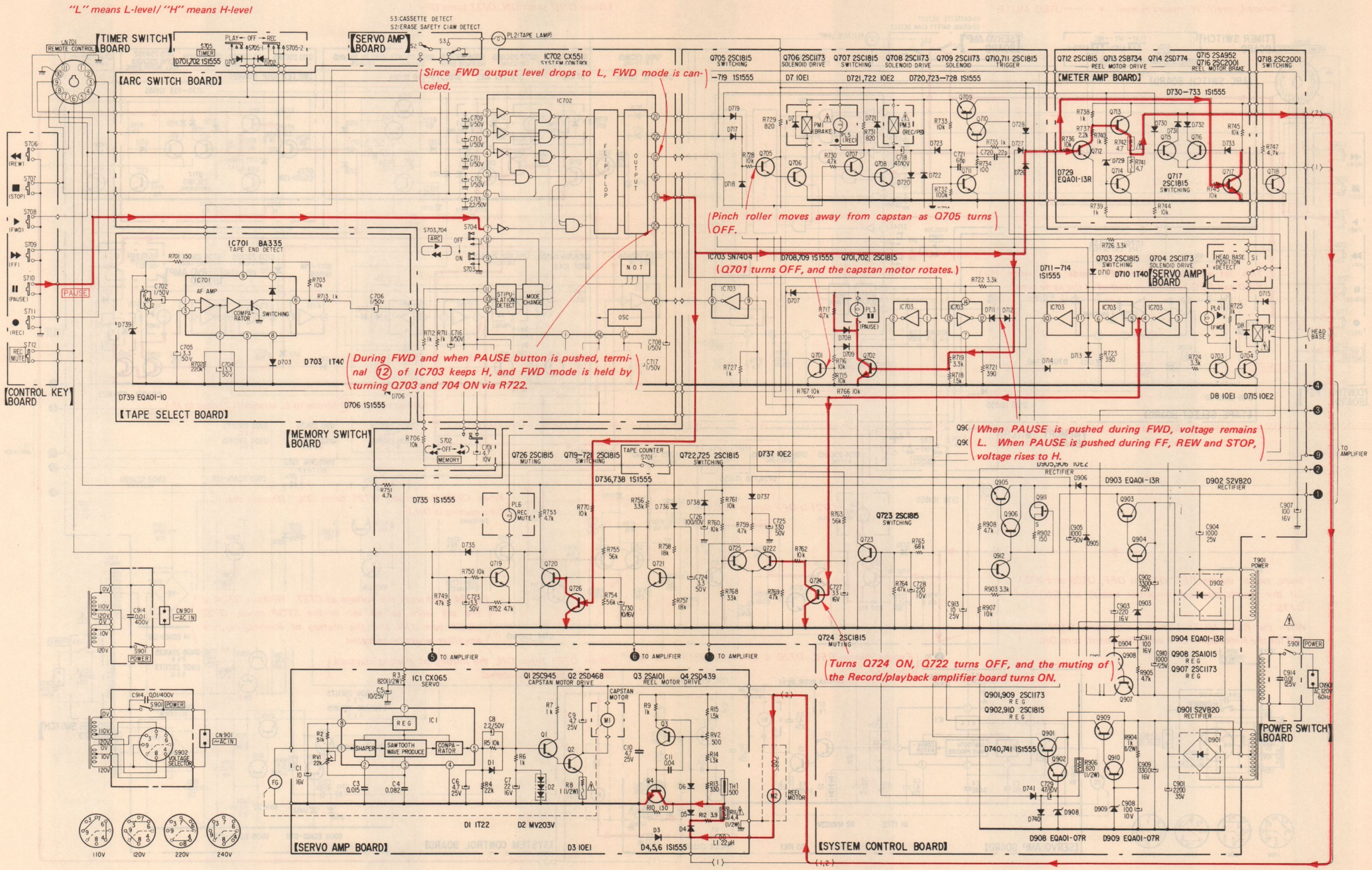

4-6. MUTE and INH

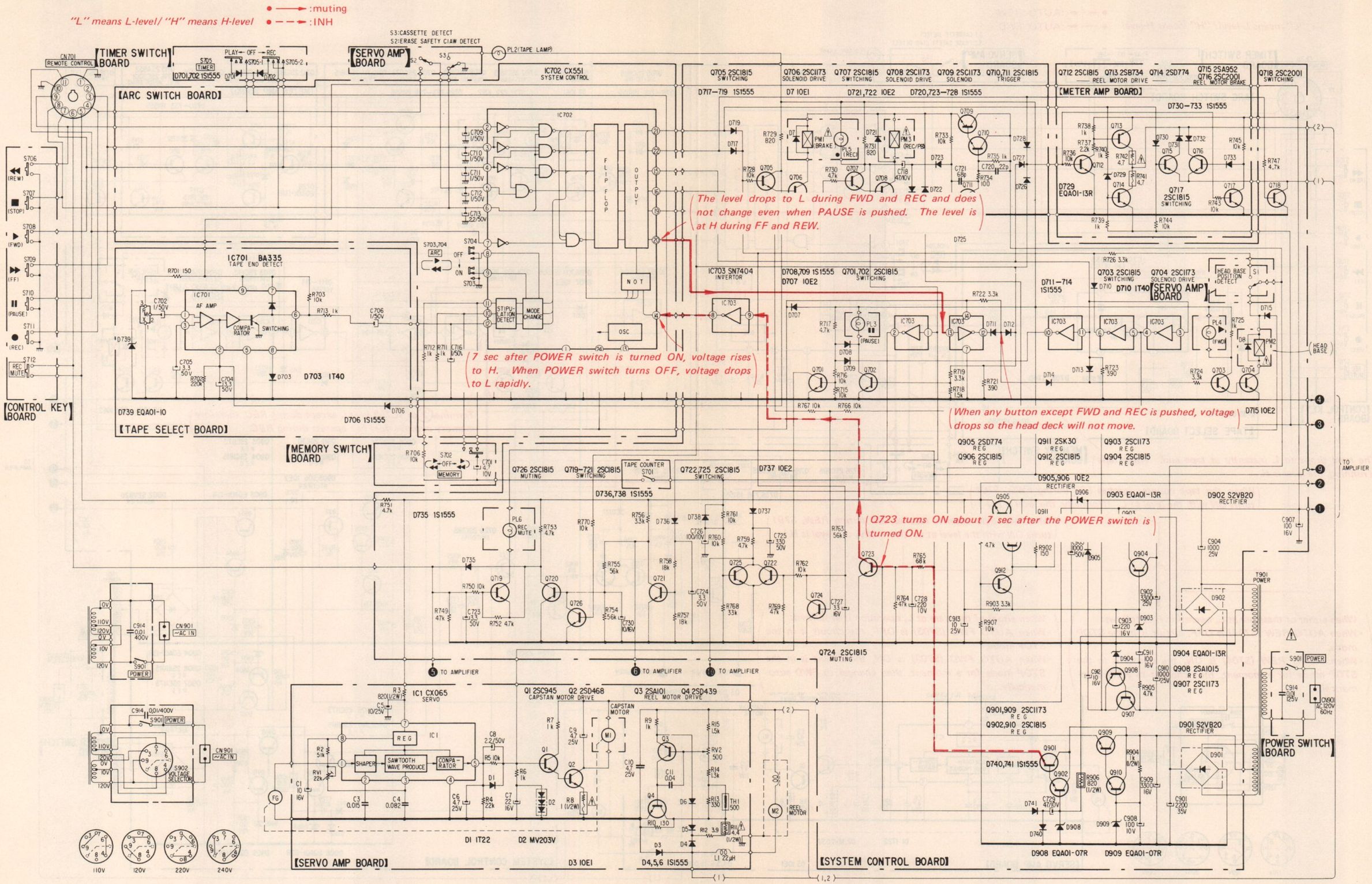

4-7. AUTO FWD and AUTO REW

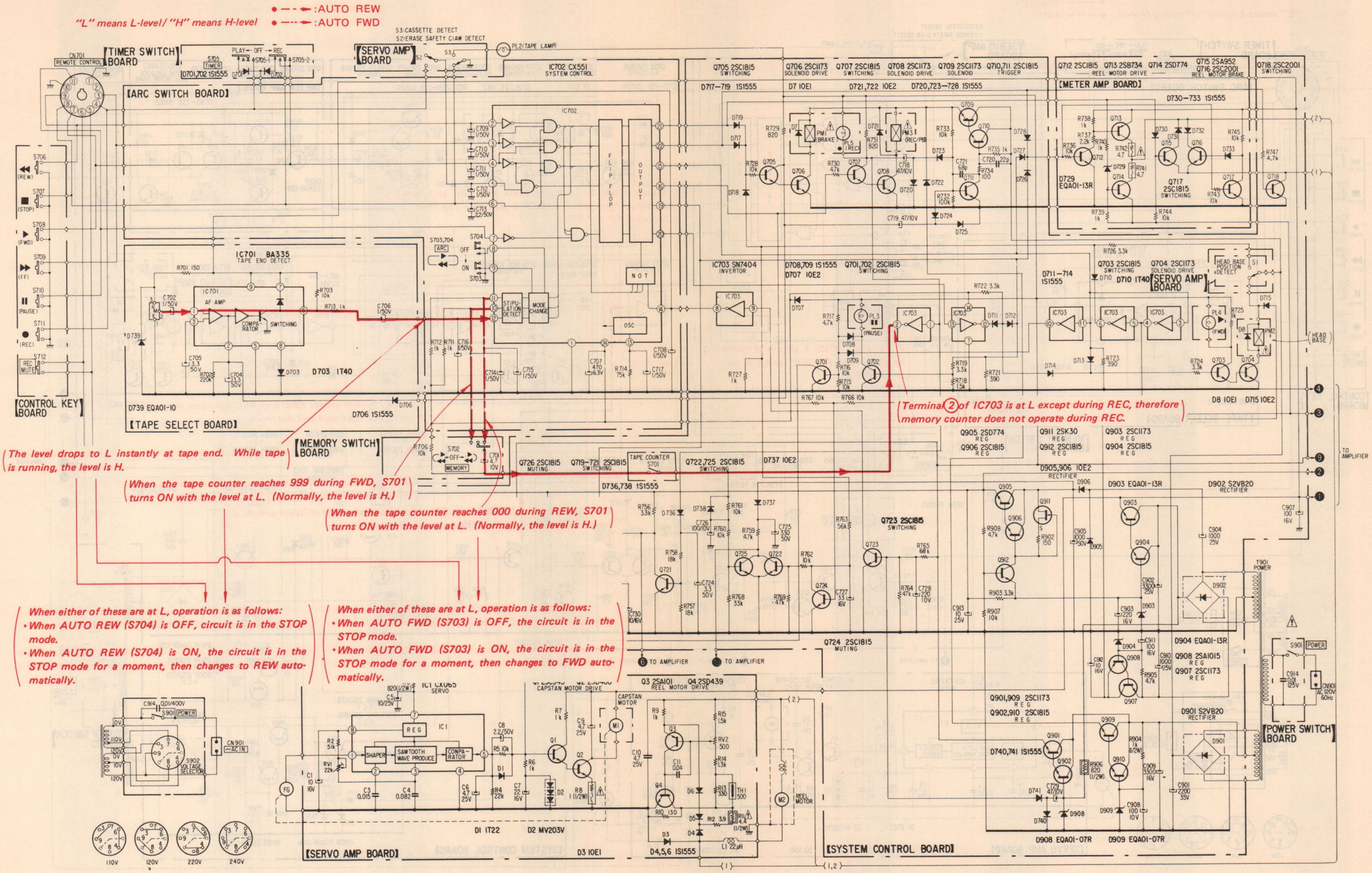

4-8. TIMER

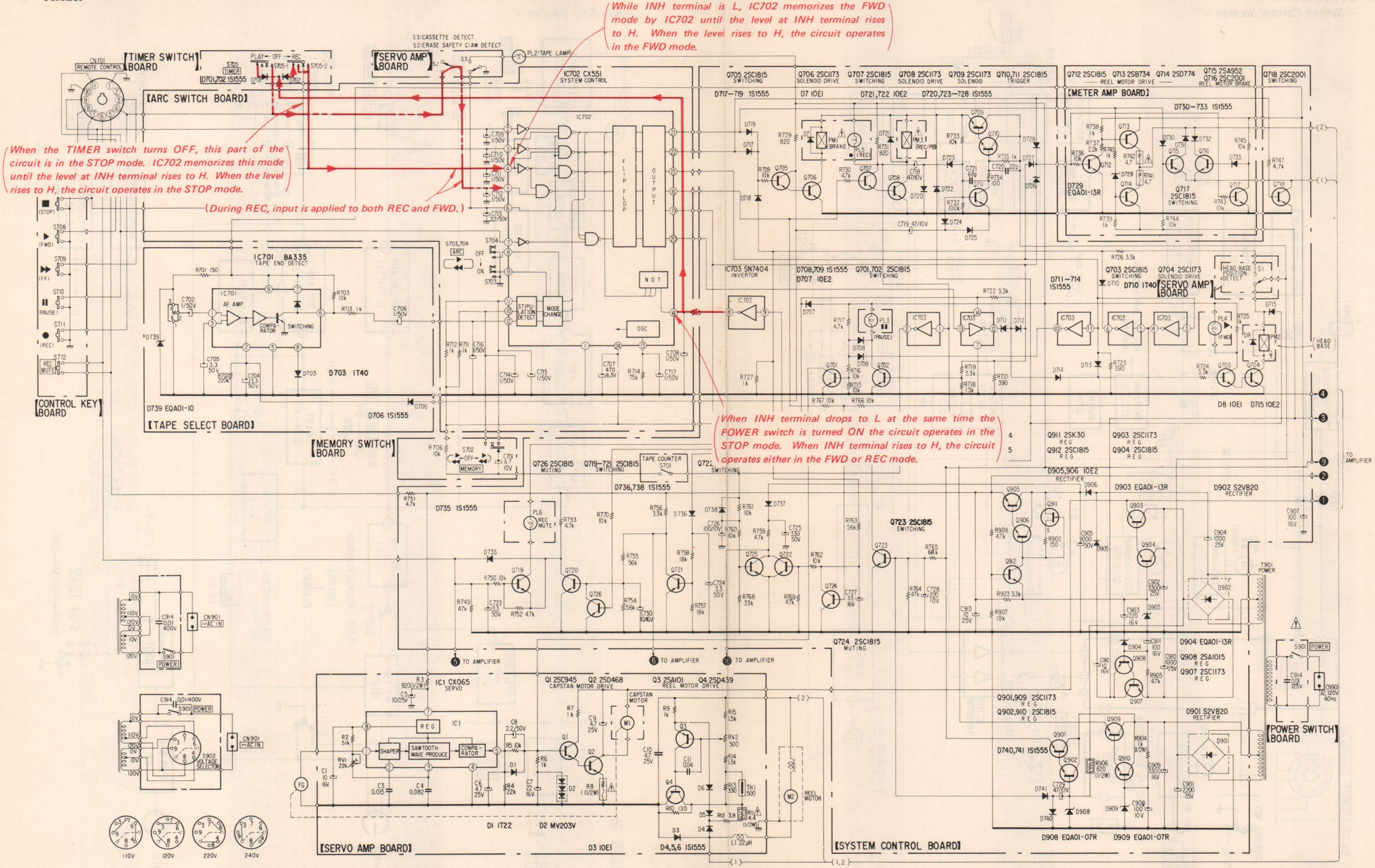

1-2. BLOCK DIAGRAM

– System Control Section –

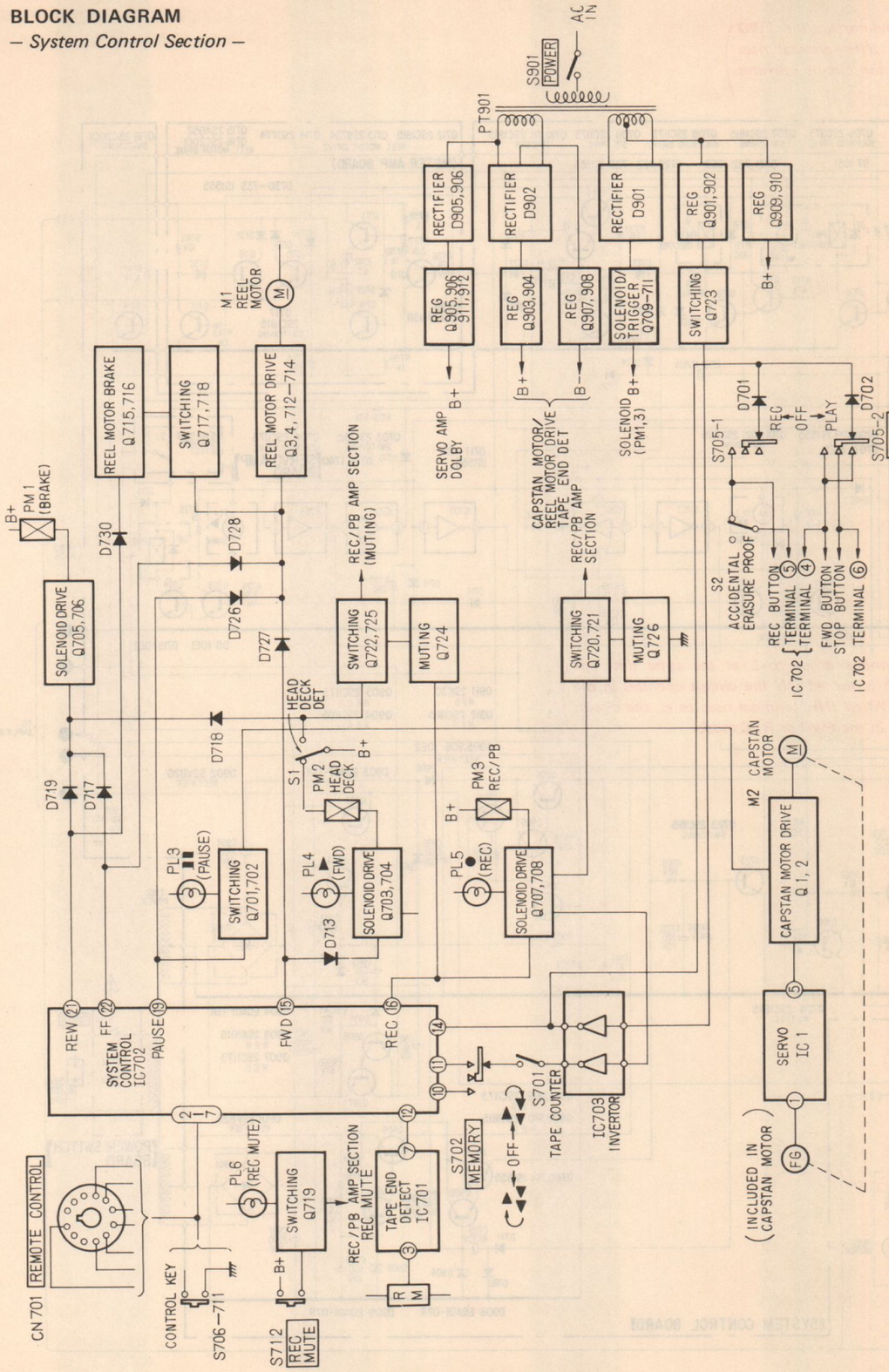

– Audio Amp Section –

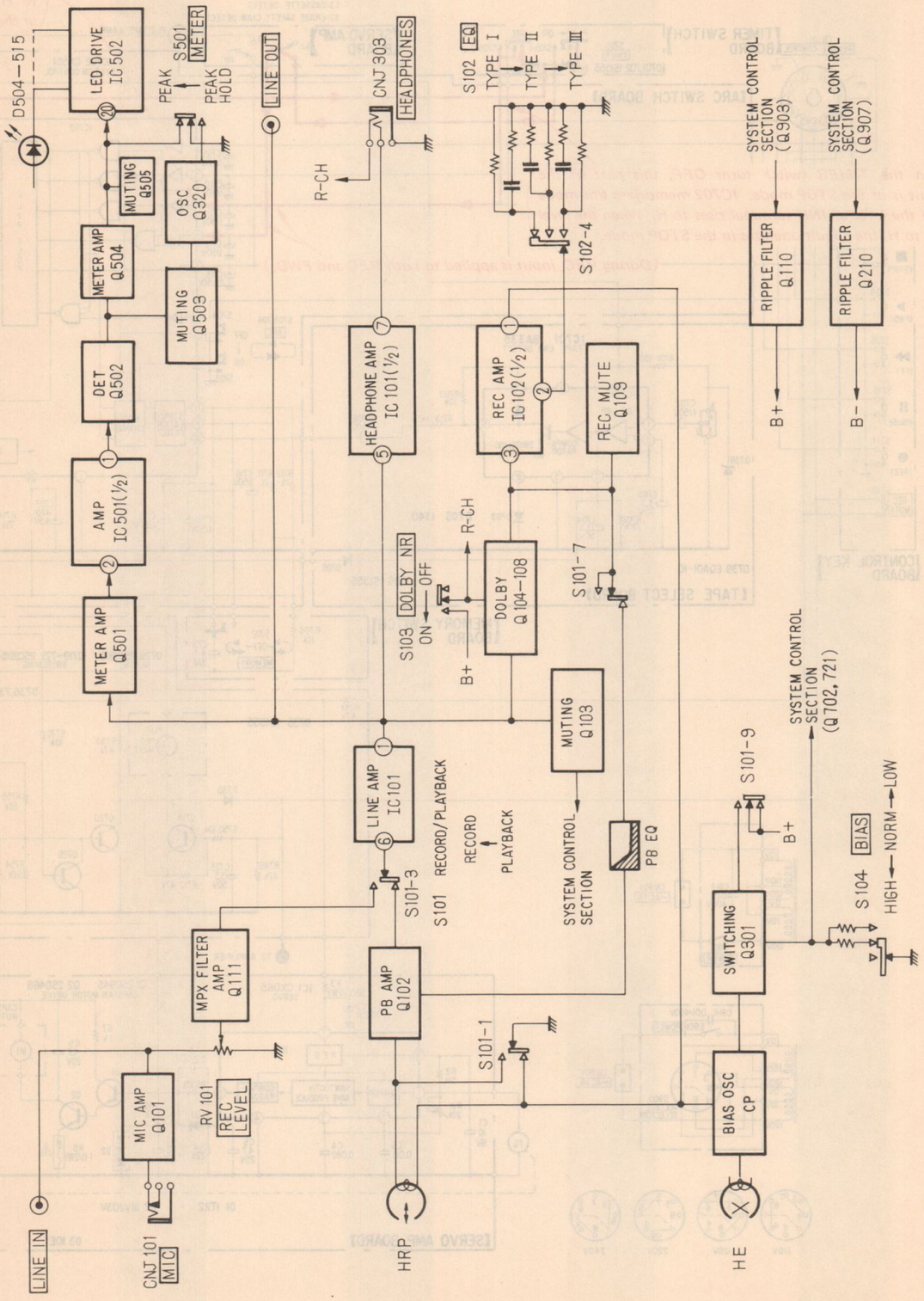

SECTION 2
DISASSEMBLY

• DISASSEMBLY FLOWCHART

The flowchart below shows the disassembly sequence. Refer to the pages cited below for the disassembly of each component.

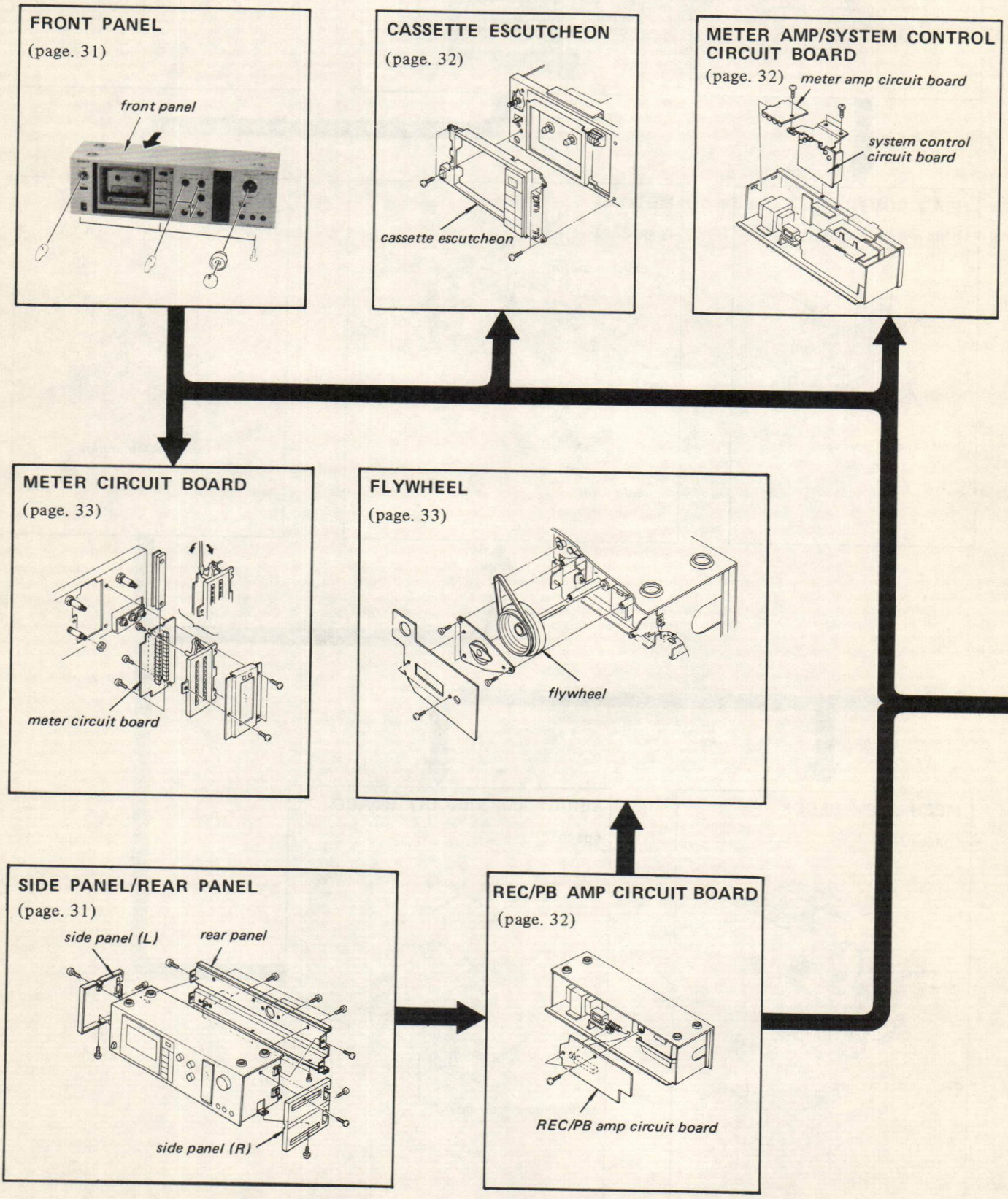

CASSETTE LID

(page. 35)

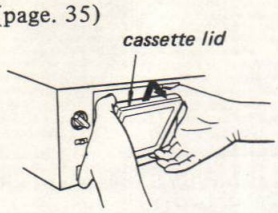

CASSETTE HOLD PLATE

(page. 35)

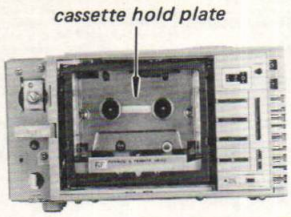

REEL SPINDLE

(page. 35)

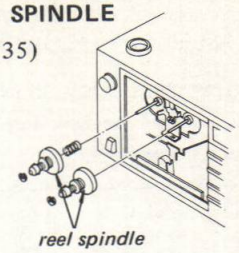

HEAD COVER

(page. 35)

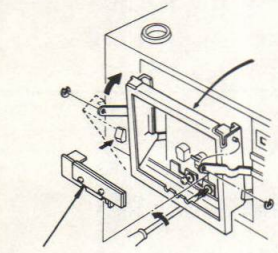

MOTOR

(page. 36)

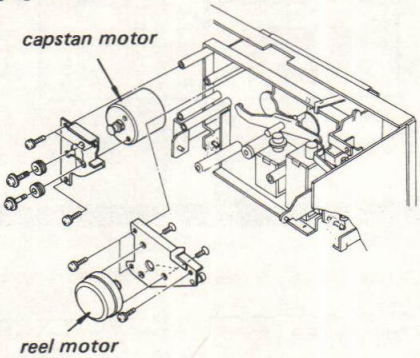

INTERMEDIATE PULLEY

(page. 36)

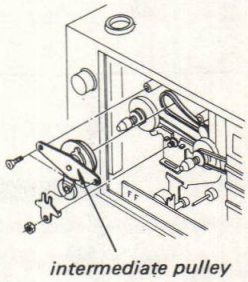

MECHANISM BLOCK

(page. 34)

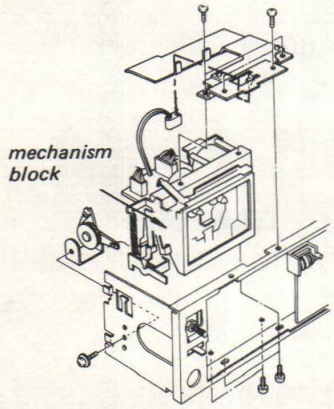

SERVO AMP CIRCUIT BOARD

(page. 34)

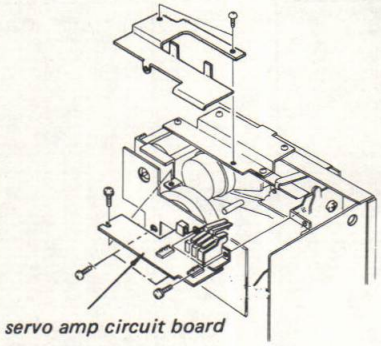

Note: Follow the disassembly procedure in the numerical order given.

FRONT PANEL REMOVAL

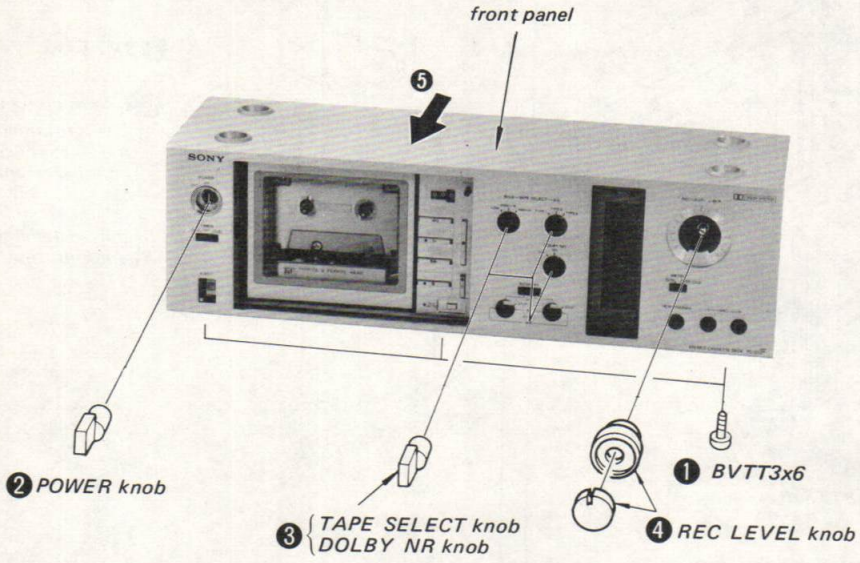

SIDE PANEL/REAR PANEL REMOVAL

1 – 8 : SIDE PANEL REMOVAL
9 – 14 : REAR PANEL REMOVAL

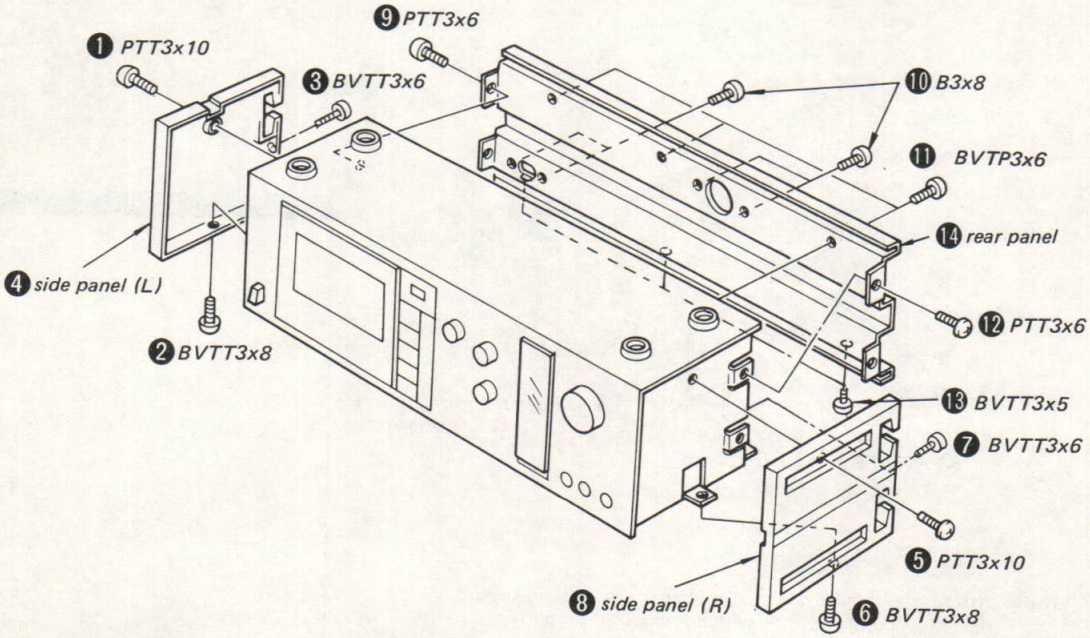

CASSETTE ESCUTCHEON REMOVAL

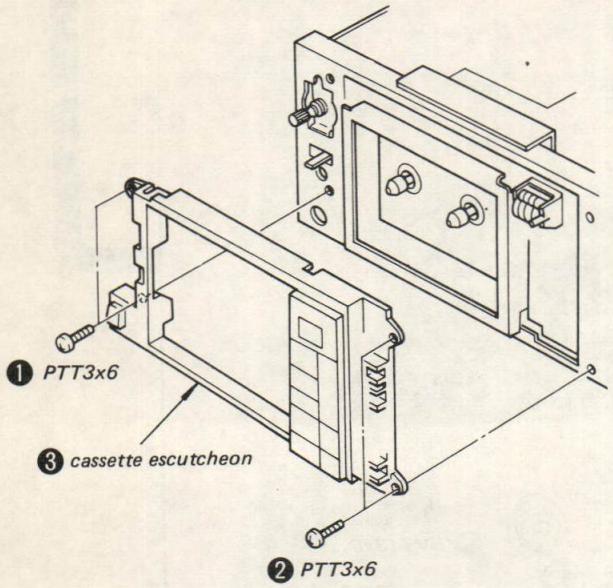

METER AMP/SYSTEM CONTROL CIRCUIT BOARD REMOVAL

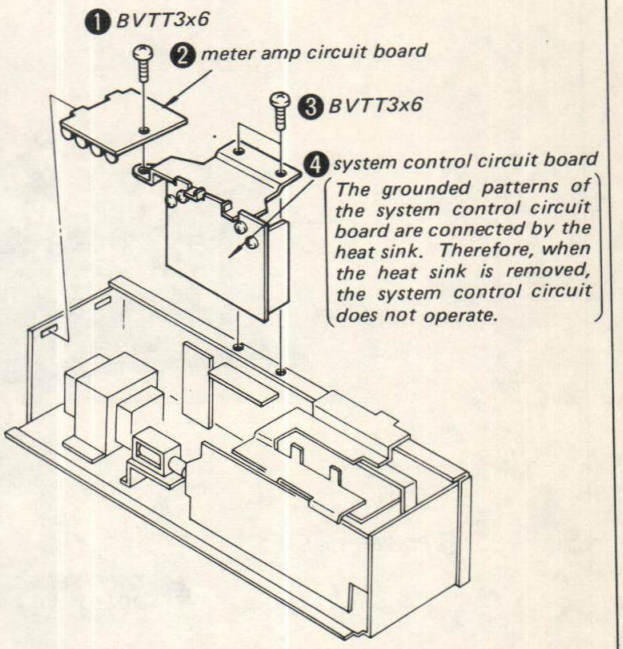

REC/PB AMP CIRCUIT BOARD REMOVAL

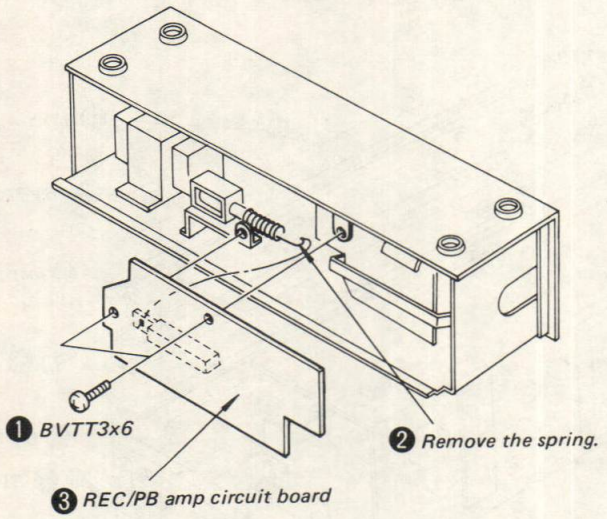

Note: After installing the REC/PB amp circuit board, make sure that the record/playback switch is changed properly.

METER CIRCUIT BOARD REMOVAL

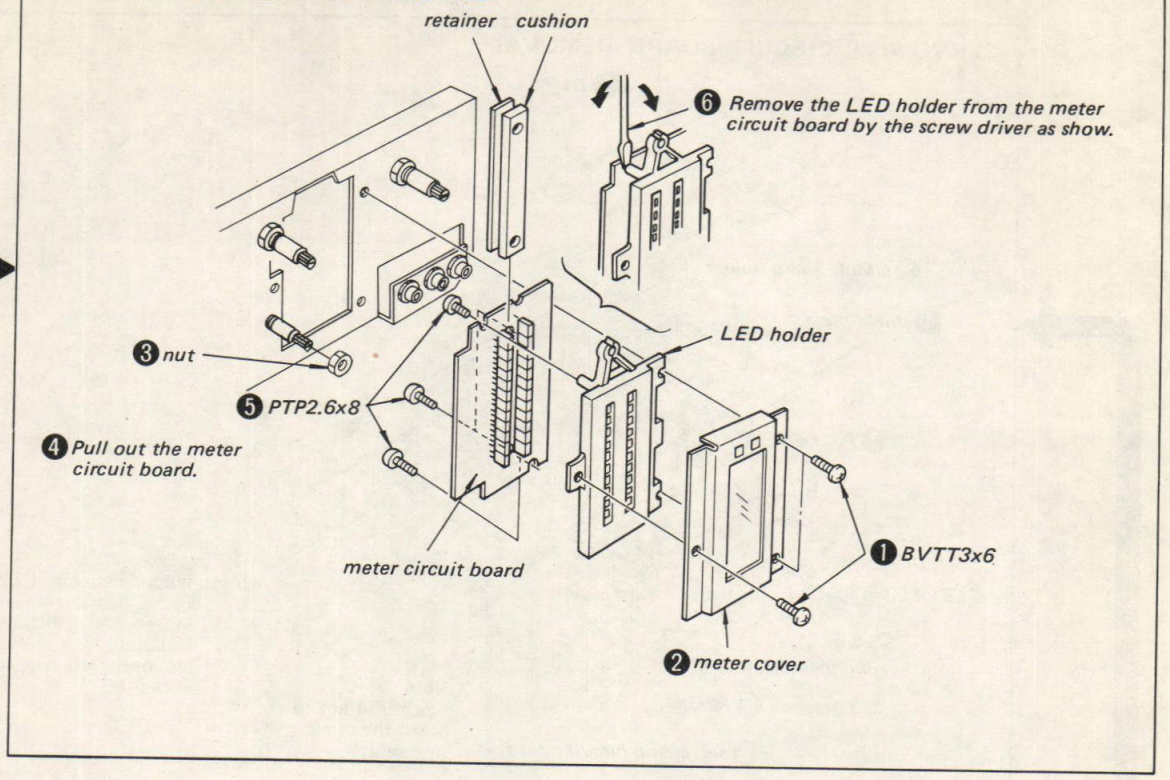

FLYWHEEL REMOVAL

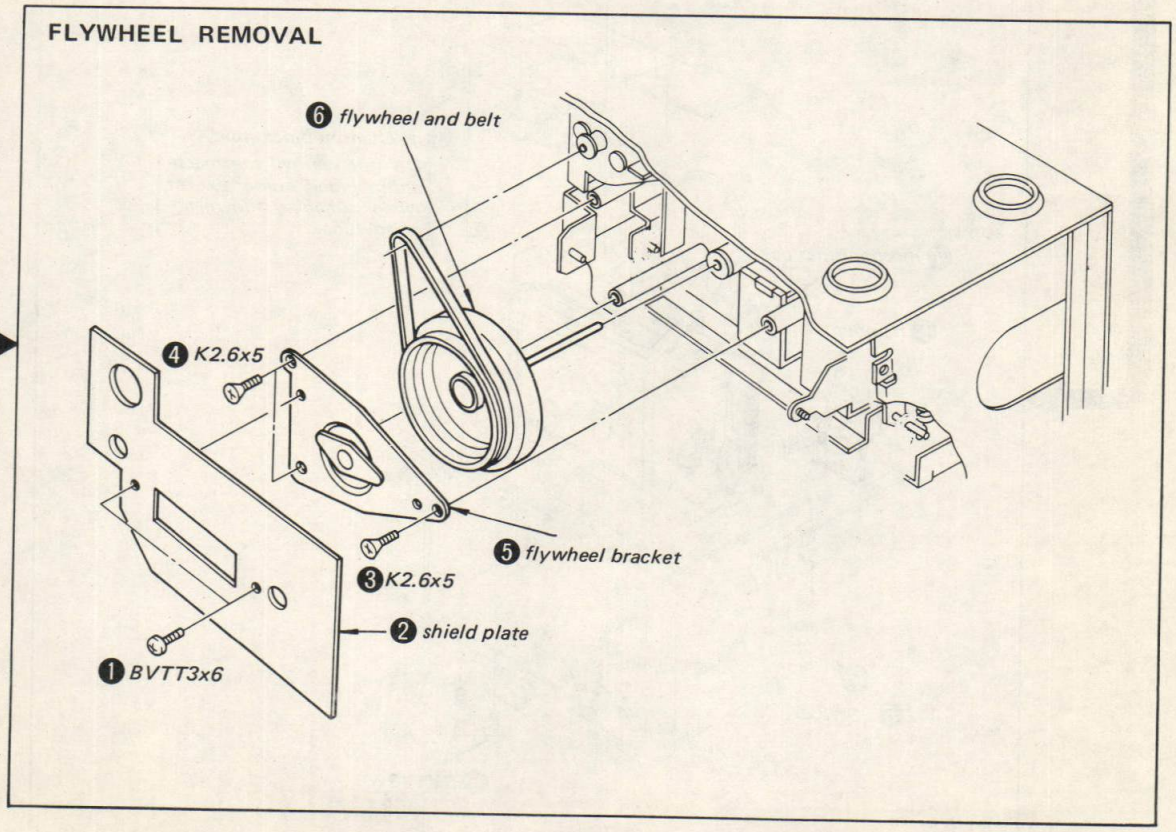

SERVO AMP CIRCUIT BOARD REMOVAL

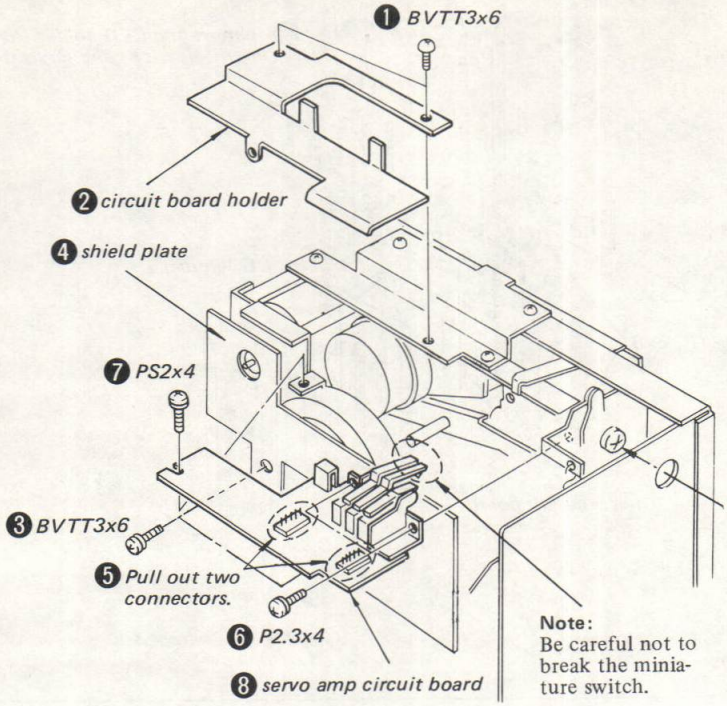

Note: When removing screw of 6, if this screw obstructs, loosen this a little. After installing the servo amp circuit board, tighten this as before.

Note:
Be careful not to break the miniature switch.

MECHANISM BLOCK REMOVAL

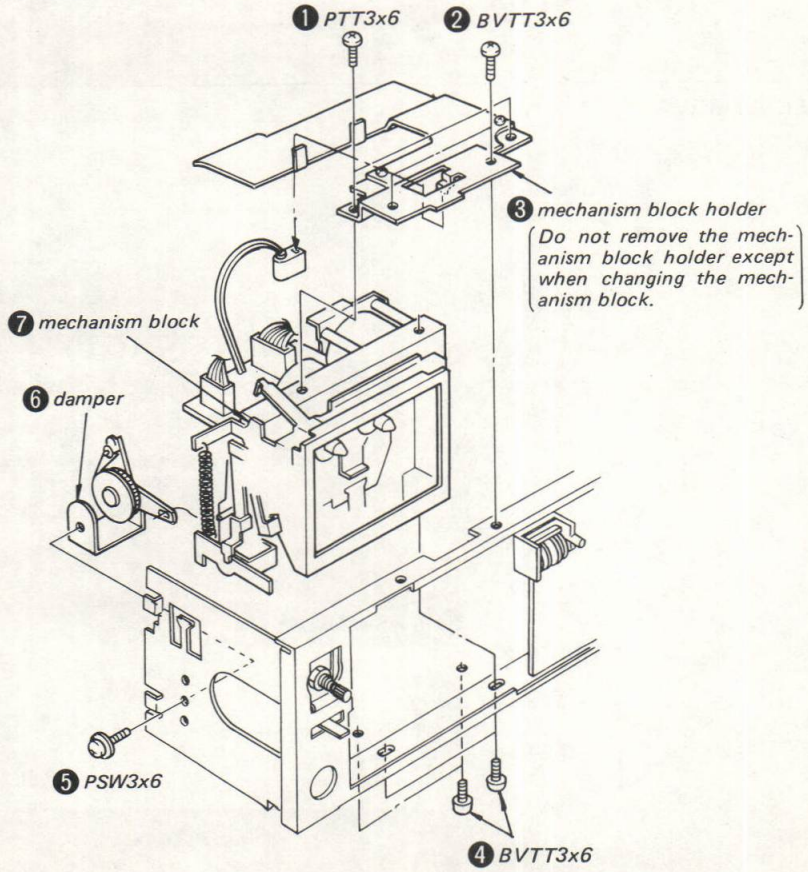

CASSETTE LID REMOVAL

1. Depress the EJECT button to open the cassette holder.
2. Push up the lid until a click is heard, then pull it toward you.

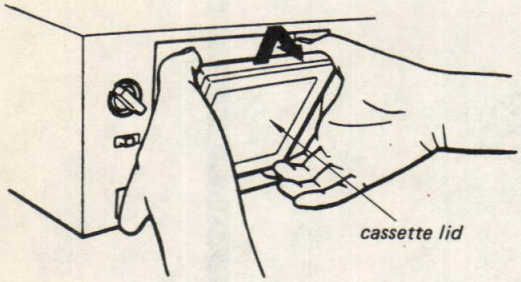

CASSETTE HOLD PLATE REMOVAL

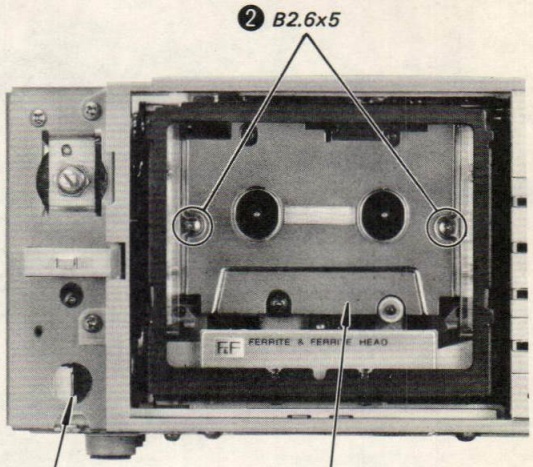

HEAD COVER REMOVAL

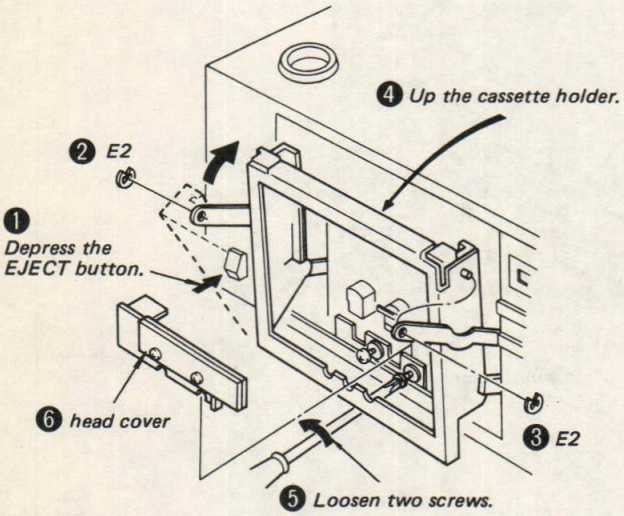

Note: If the screw can be loosened by using a screw driver from the bottom of the cassette holder, step 2 – 4 may be ignored.

REEL SPINDLE REMOVAL

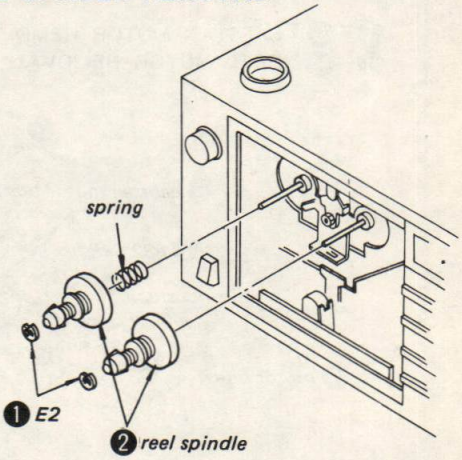

INTERMEDIATE PULLEY REMOVAL

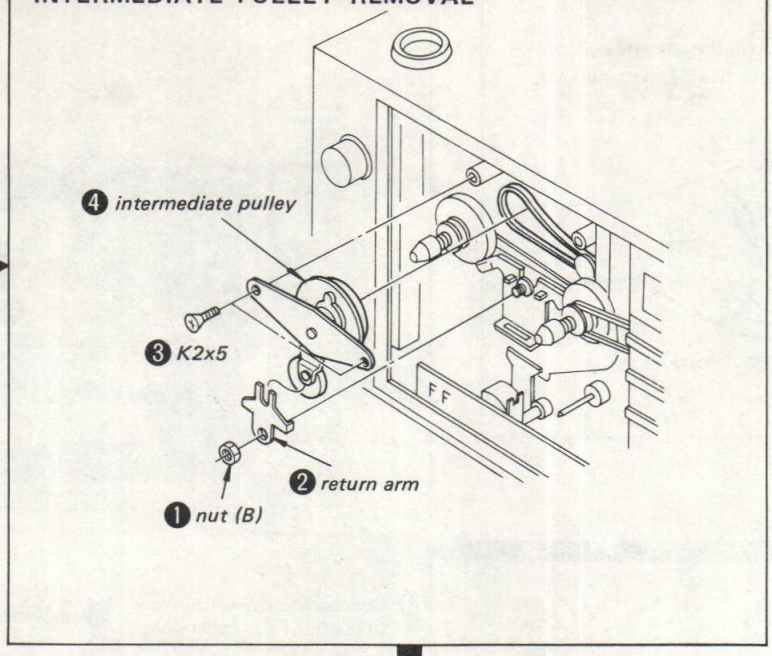

MOTOR REMOVAL

❶–❺ : CAPSTAN MOTOR REMOVAL
❻–❿ : REEL MOTOR REMOVAL

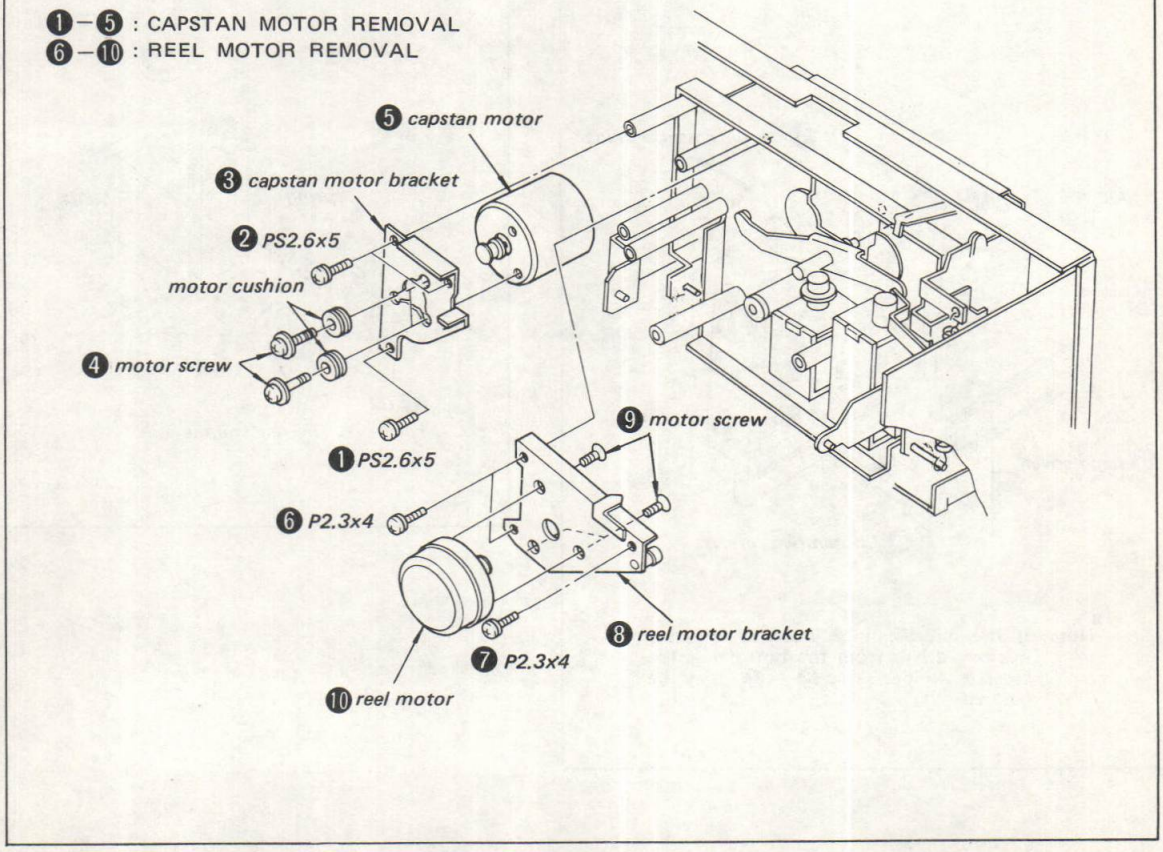

SECTION 3
ADJUSTMENTS

3-1. MECHANICAL ADJUSTMENTS

PRECAUTION

1. Clean the following parts with a denatured-alcohol-moistened swab:

record/playback head	pinch roller
erase head	rubber belts
capstan	idlers

2. Demagnetize the record/playback head with a head demagnetizer.
3. Do not use a magnetized screwdriver for the adjustments.
4. After the adjustments, apply suitable locking compound to the parts adjusted.
5. The adjustments should be performed with the rated power supply voltage unless otherwise noted.

Forward Torque Adjustment
– Playback Mode –

1. Measure forward torque by any one of the Sony torque meters CQ-101A, 102A or 103A.
2. If necessary, adjust RV2 to obtained the specified values.

– Specification –

35 – 45 g·cm (0.49 – 0.62 oz·inch)

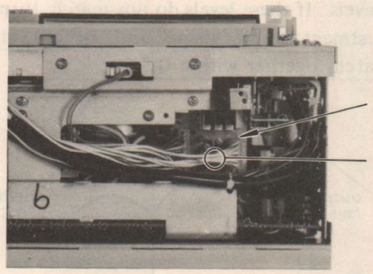

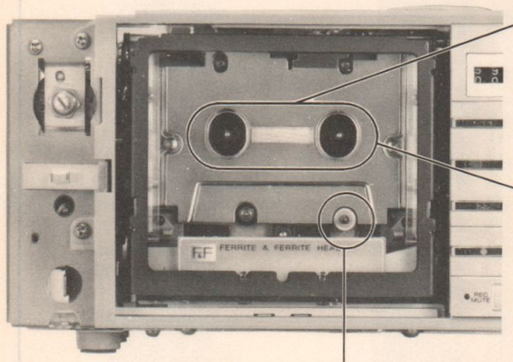

	Specifications	Test Equipment
Back Tension Torque	2.5–5.5 g·cm (0.035–0.076 oz·inch)	Sony torque meter CQ-102A
Fast Forward and Rewind Torque	100–120 g·cm (1.39–1.66 oz·inch)	Sony torque meter CQ-201A
Tape Tension	more than 150 g (more than 5.3 oz)	Sony tape tension meter CQ-403
Pinch Roller Pressure	280–400 g (9.88–14.1 oz)	Spring scale or tension gauge

Pinch Roller Pressure Measurement
– Playback Mode –

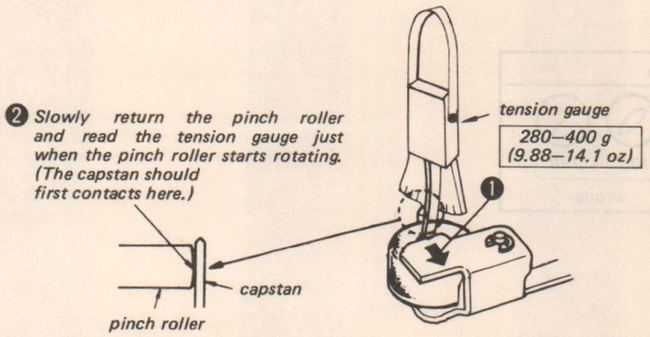

Flywheel Thrust Play Adjustment
– Playback Mode –

1. Loosen the thrust screw by turning it counterclockwise.
2. Tighten up the thrust screw until flywheel does not move by hand.
3. Then, turn the thrust screw counterclockwisely 120° from the position obtained in step 2.

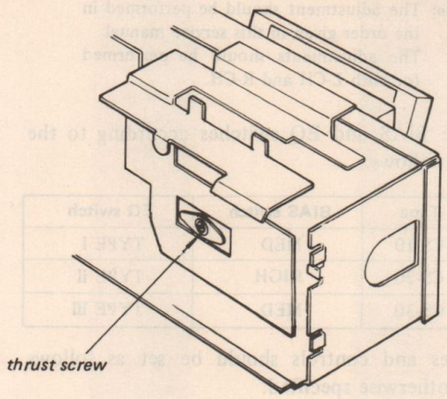

Solenoid (record/playback change: PM3) Position Adjustment

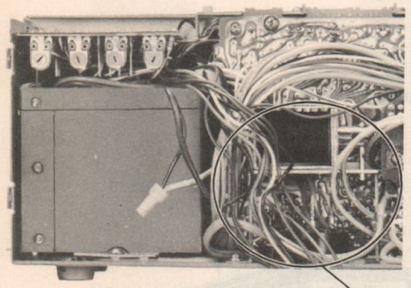

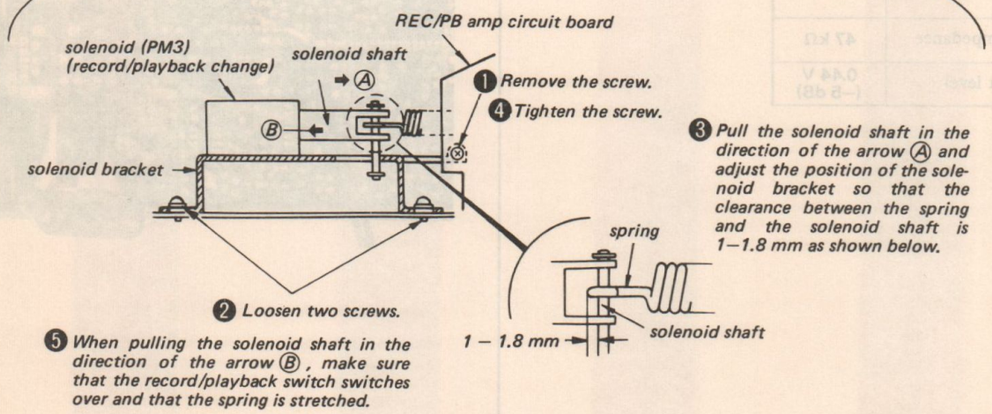

3-2. ELECTRICAL ADJUSTMENTS

Note: The adjustment should be performed in the order given in this service manual. The adjustments should be performed for both L-CH and R-CH.

- Set the BIAS and EQ switches according to the tape as follows.

Tape	BIAS switch	EQ switch
CS-10	MED	TYPE I
CS-20	HIGH	TYPE II
CS-30	MED	TYPE III

- Switches and controls should be set as follows unless otherwise specified.

DOLBY NR switch:	OFF
EQ switch:	TYPE I
BIAS switch:	MED
TIMER STANDBY switch:	OFF
MEMORY switch:	OFF
REC MUTE switch:	OFF

- Standard Record:

Deliver the standard input signal level to the input jack and set the REC LEVEL control to obtain the standard output signal level.

Standard Input Level

	MIC	LINE IN
source impedance	300 Ω	10 kΩ
input level	0.77 mV (–60 dB)	0.25 V (–10 dB)

Standard Output Level

	LINE OUT
load impedance	47 kΩ
output level	0.44 V (–5 dB)

Tape Speed Adjustment

Procedure:

Mode: playback

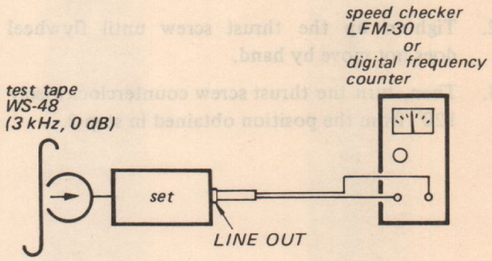

Specification:

Speed checker	Digital frequency counter
±0.3%	2,990–3,010 Hz

Frequency difference between the beginning and the end of the tape should be within 1 % (30 Hz).

If necessary, adjust RV1 to obtain the specified values.

Adjustment Location:

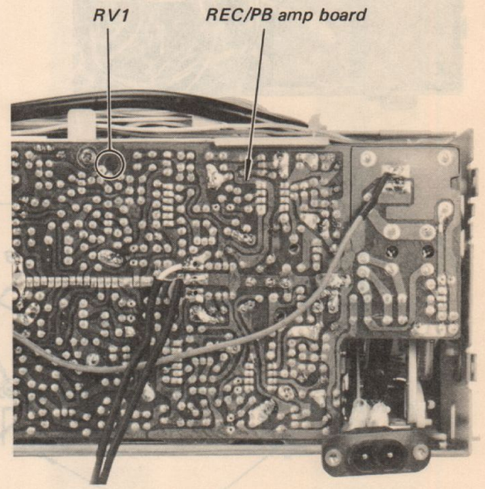

Record/playback Head Azimuth Adjustment

Procedure:

1. Mode: playback

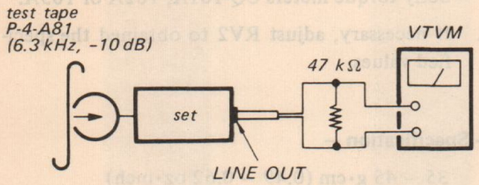

2. Turn the adjustment screw for the maximum output levels. If these levels do not match, turn the adjustment screw where both of output levels match together within 0.5 dB.

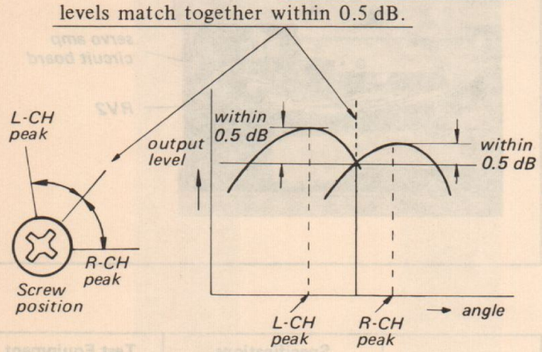

3. Phase Check

Mode: playback

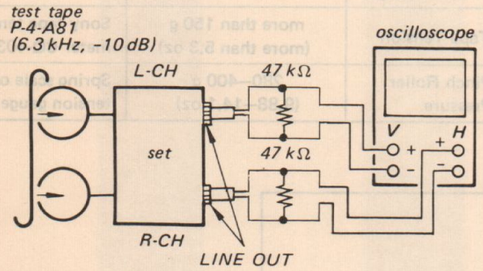

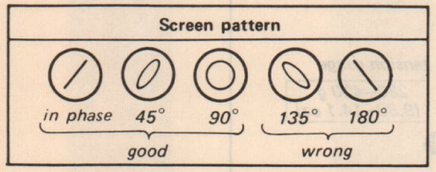

Adjustment Location:

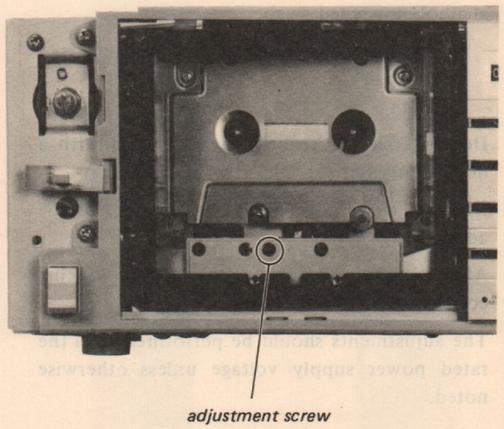

Playback Level Adjustment

Setting:

TAPE SELECT switch: TYPE I

Procedure:

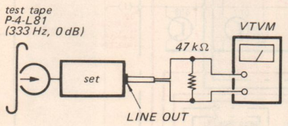

Specification:

LINE OUT level: 0.52–0.58 V
(−3 dB ± 0.5 dB)
Level difference between channels:
less than 0.5 dB

Check that the LINE OUT level does not change in playback mode while changing the mode from playback to stop several times.

Adjustment Location:

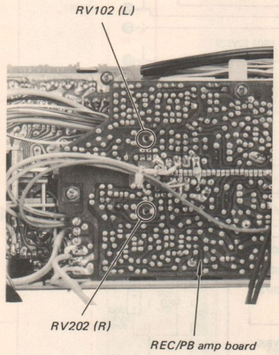

Overall Frequency Response Adjustment

Procedure:

1. Mode: playback

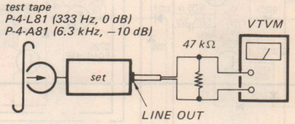

Playback two test tapes and measure the deviation of the playback output.

Specification:

Deviation of the Playback Output: within 11 dB

2. If necessary, solder the capacitor (120pF) to obtain the specified values.

Adjustment Location:

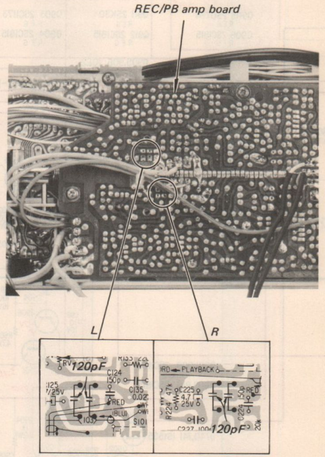

Note: If the specified values are obtained by one capacitor, do not connect other one.
If the other one is connected, the response will deteriorate.

Record Bias Adjustment

Setting:

EQ switch: TYPE I
BIAS switch: MED
REC LEVEL control: standard record
(See page 39.)

Procedure:

1. Mode: record

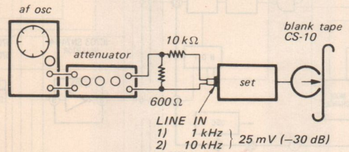

2. Mode: playback

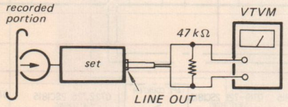

3. Make sure that 10 kHz and 1 kHz signal output levels equal.
4. If necessary, adjust CT301-1 (L) and CT301-2 (R) and repeat step 1–3.

Adjustment Location:

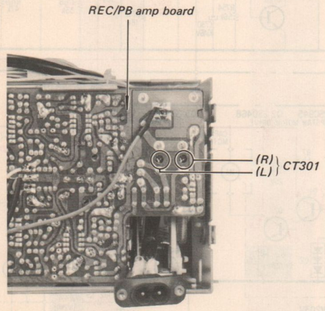

Record Level Adjustment

Setting:

EQ switch: TYPE I
BIAS switch: MED
REC LEVEL control: standard record
(See page 39.)

Procedure:

1. Mode: record

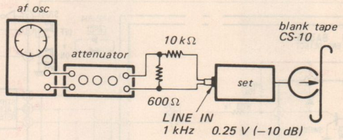

2. Mode: playback

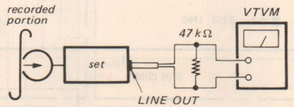

Specification:

LINE OUT level: 0.42–0.46 V
(−5 dB ± 0.5 dB)

3. Change the blank tape to CS-20 and CS-30, and perform the same record and playback procedure. Measure LINE OUT level.

Sony blank Tape	EQ	BIAS	LINE OUT level
CS-20	TYPE II	HIGH	0.37 – 0.58 V (−5 dB ± 1.5 dB)
CS-30	TYPE III	MED	

Adjustment Location:

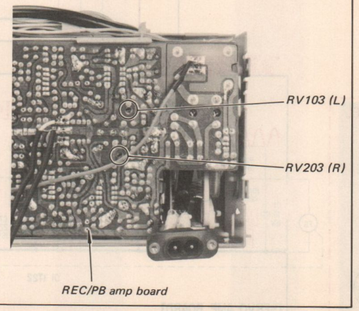

Level Meter Adjustment

Setting:

METER switch: PEAK

Procedure:

1. Mode: record

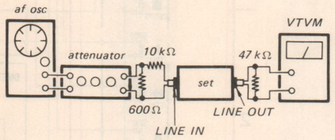

2. Apply 1 kHz (−10 dB) signal to LINE IN and set REC LEVEL knobs for −1 dB reading on VTVM.
3. Adjust RV501(L) and RV601(R) so that only the yellow LEDs completely light up but the red LEDs do not.
4. Change the input signal level to −9.9 dB and adjust RV501(L), RV601(R) so that the bottom red LED faintly lights up.
5. Change the input signal level to −40 dB and adjust RV502(L), RV602(R) so that the bottom yellow LED faintly lights up.
6. Change the input signal level to −41 dB and make sure that none of the LEDs light up.
7. Repeat step 2-6.
8. Apply 100 Hz (−10 dB) signal to LINE IN and make sure that the bottom red LED does not lights up..
9. Apply 1 kHz (−5 dB) signal to LINE IN and make sure that the all LEDs completely light up.

Adjustment Location:

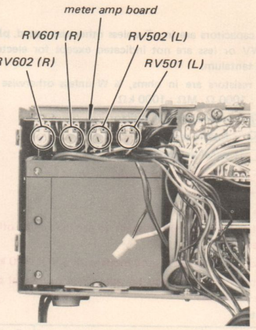

TC-20F/20FB TC-20F/20FB

SECTION 4
DIAGRAMS

4-1. SCHEMATIC DIAGRAM
– System Control Section –

Note:

- All capacitors are in μF unless otherwise noted. pF : μμF 50WV or less are not indicated except for electrolytics and tantalum.
- All resistors are in ohms, ¼ W unless otherwise noted. kΩ : 1000 Ω, MΩ : 1000 kΩ
- : nonflammable resistor.
- : fusible resistor.
- : panel designation.
- : adjustment for repair.
- : B+ bus.
- : B− bus.
- Voltages are dc with respect to ground unless otherwise noted.
- Readings are taken at stop mode with a VOM (20 kΩ/V).
- Voltage variations may be noted due to normal production tolerances.
- Switch

Ref. No.	Switch	Position
S1	head deck det	OFF
S2	accidental erasure proof det	OFF
S3	det	OFF
S701	tape counter	OFF
S702	MEMORY	OFF
S703, 704	ARC	OFF
S705	TIMER	OFF
S706	rewind	OFF
S707	stop	OFF
S708	forward	OFF
S709	first forward	OFF
S710	pause	OFF
S711	record	OFF
S712	REC MUTE	OFF
S901	POWER	OFF
S902	voltage selector (E model)	—

Note: The components identified by shading and mark ⚠ are critical for safety. Replace only with part number specified.

Note: Les composants identifiés par une trame et une marque ⚠ sont critiques pour la sécurité. Ne les remplacer que par une pièce portant le numéro spécifié.

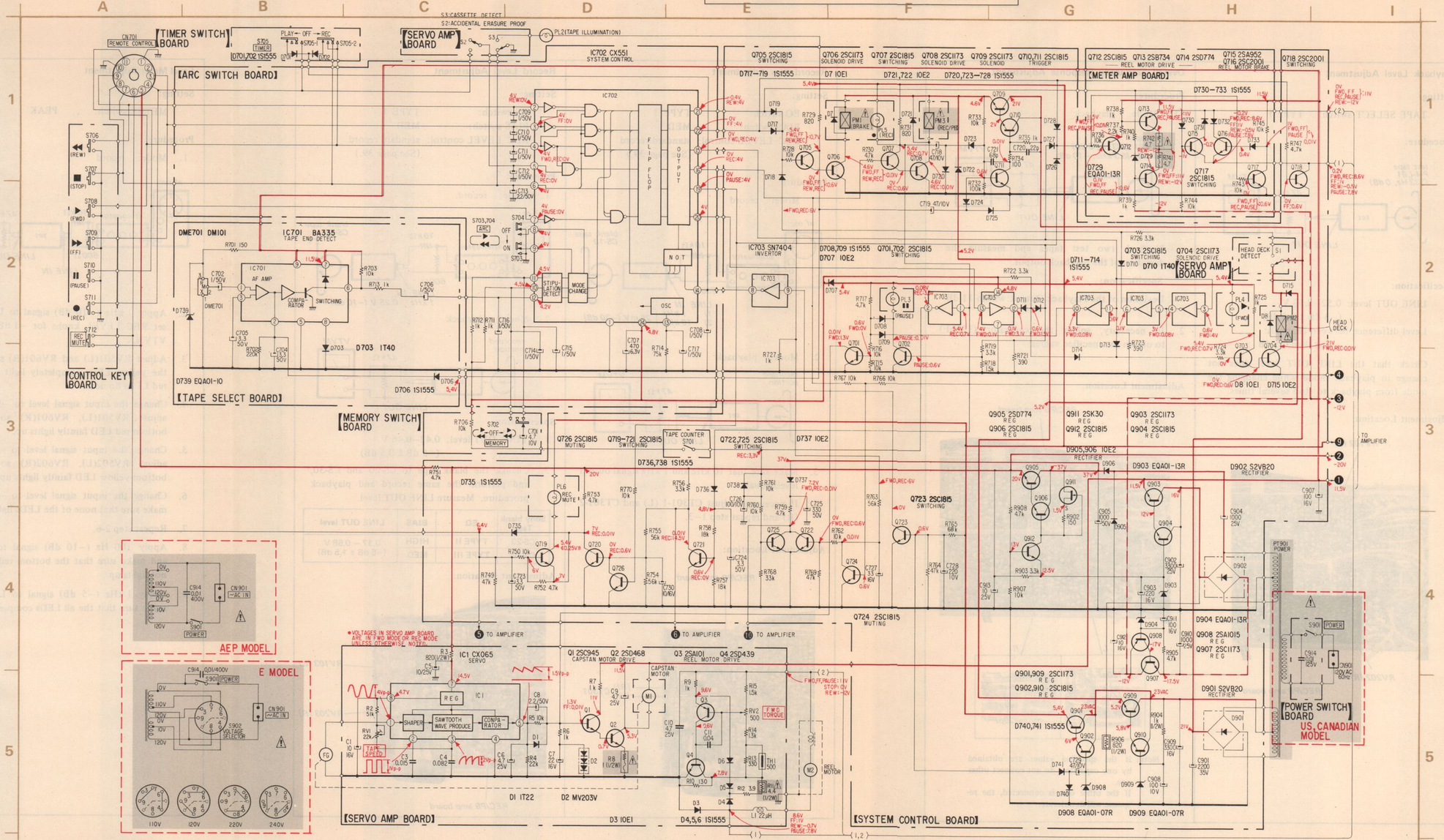

4-2. MOUNTING DIAGRAM – System Control Section –

– Conductor Side –

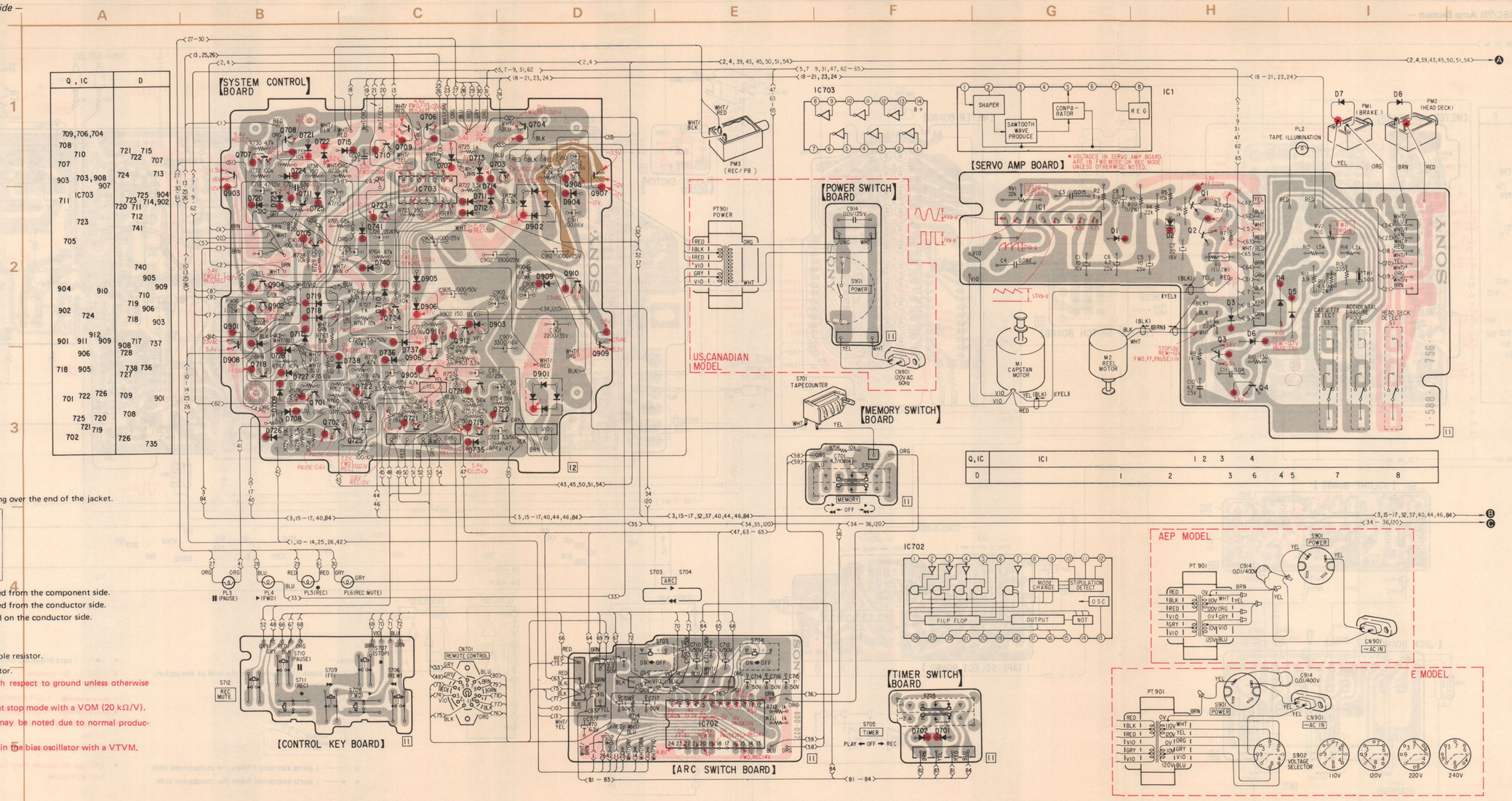

Note:

- Color code of sleeving over the end of the jacket.

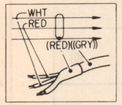

- ○— : parts extracted from the component side.
- ●— : parts extracted from the conductor side.
- ■ : part mounted on the conductor side.
- : B + pattern
- : B – pattern
- : nonflammable resistor.
- : fusible resistor.
- Voltages are dc with respect to ground unless otherwise noted.
- Readings are taken at stop mode with a VOM (20 kΩ/V).
- Voltage variations may be noted due to normal production tolerances.
- AC voltage readings in the bias oscillator with a VTVM.

TC-2OF/2OFB TC-2OF/2OFB

4-3. MOUNTING DIAGRAM — REC/PB Amp Section —

— Conductor Side —

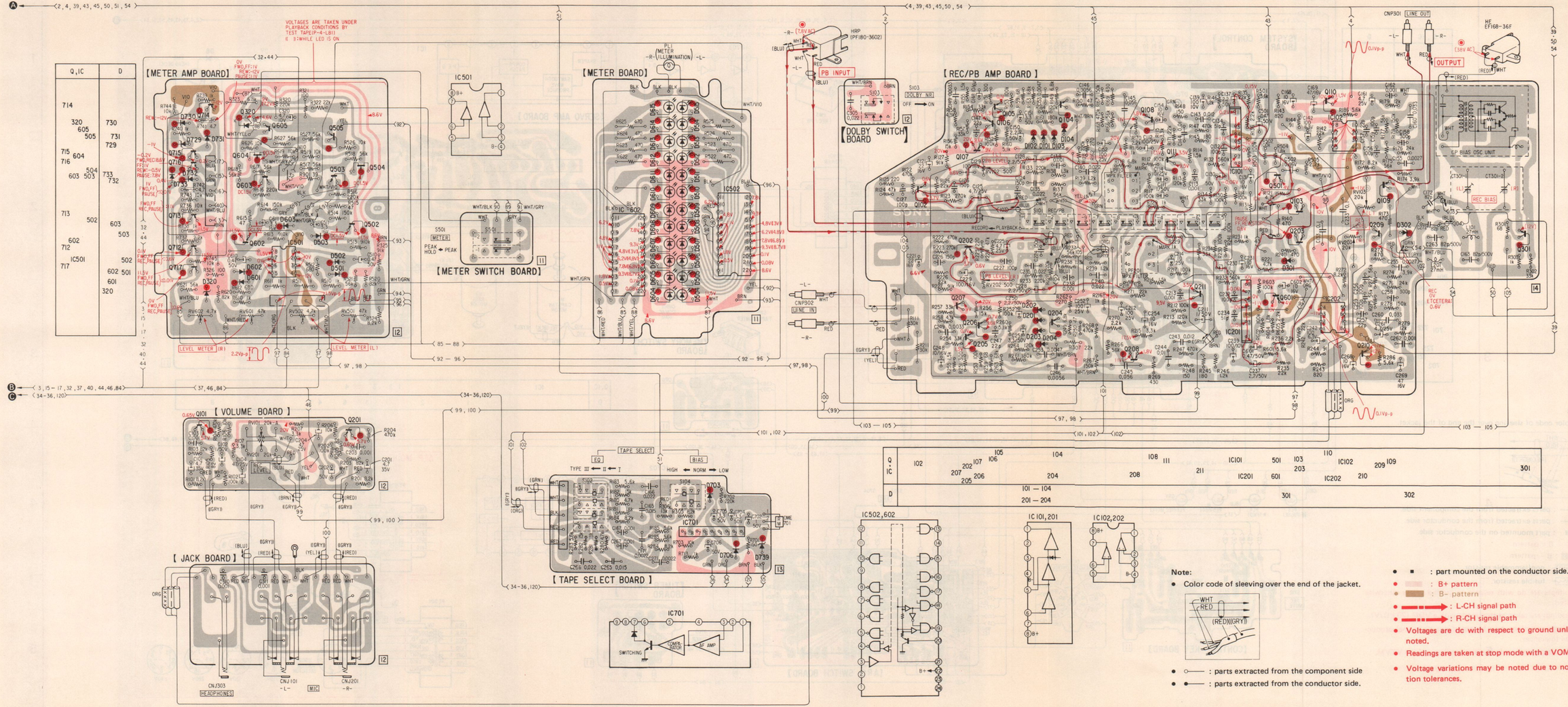

Note:

- Color code of sleeving over the end of the jacket.

- ○—— : parts extracted from the component side
- ●—— : parts extracted from the conductor side.

- ● ■ : part mounted on the conductor side.
- : B+ pattern
- : B− pattern
- : L-CH signal path
- : R-CH signal path
- Voltages are dc with respect to ground unless otherwise noted.
- Readings are taken at stop mode with a VOM (20 kΩ/V).
- Voltage variations may be noted due to normal production tolerances.

4-4. SCHEMATIC DIAGRAM – REC/PB Amp Section –

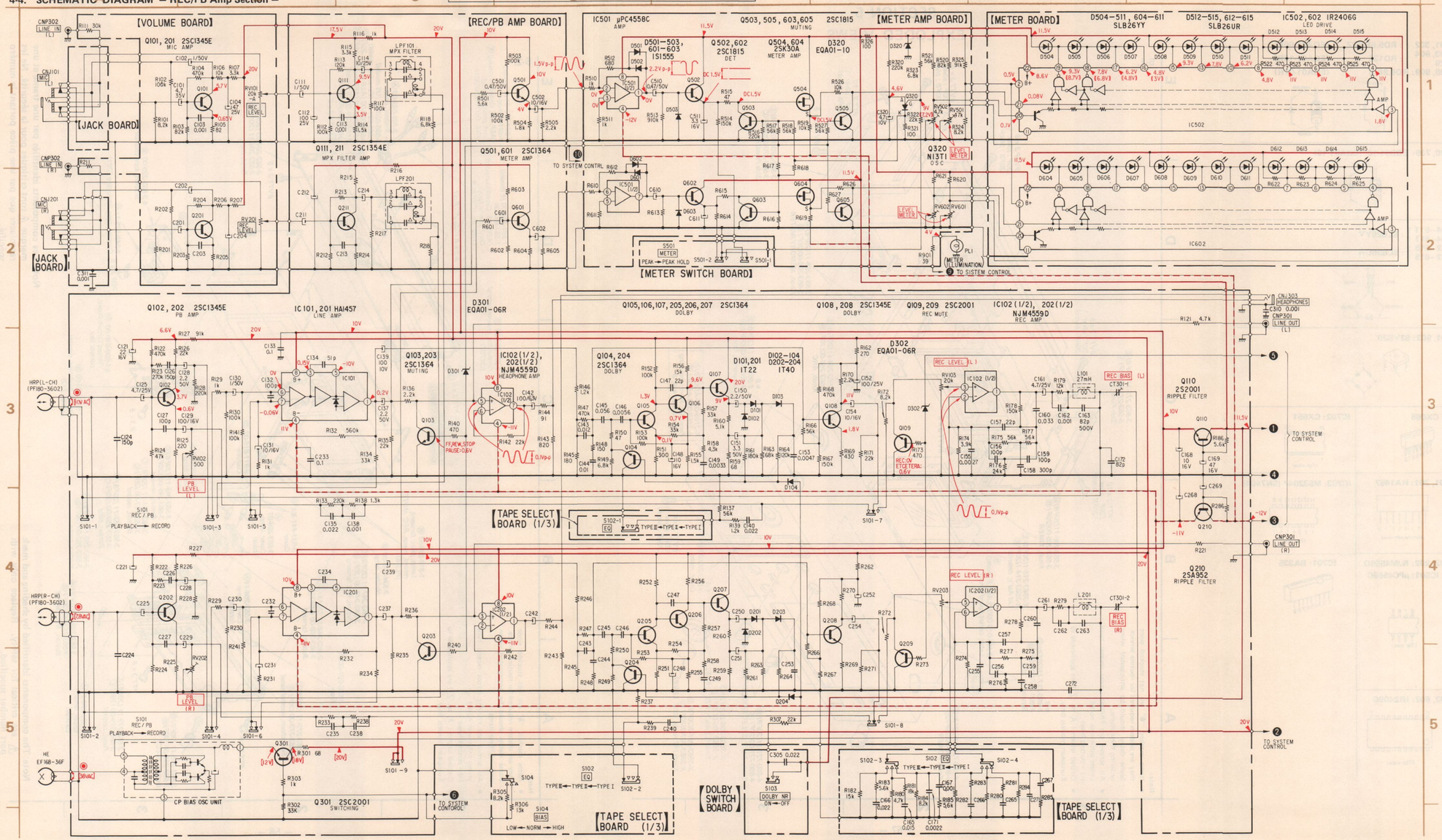

Note:

- Components for right channel have same values as for left channel.
- All capacitors are in μF unless otherwise noted. pF : μμF 50 WV or less are not indicated except for electrolytics and tantalum.
- All resistors are in ohms, ¼ W unless otherwise noted. kΩ ; 1000 Ω, MΩ : 1000 kΩ
- ▭ : panel designation.
- ▭ : adjustment for repair.
- Voltages are dc with respect to ground unless otherwise noted.
- Readings are taken at stop mode with a VOM (20 kΩ/V).
- [ ] : record
- Voltage variations may be noted due to normal production tolerances.
- AC voltage readings in the bias oscillator with a VTVM.
- Switch

Ref. No.	Switch	Position
S101	record/playback	playback
S102	EQ	TYPE I
S103	DOLBY NR	OFF
S104	BIAS	NORM
S501	METER	PEAK

Replacement Semiconductors

For replacement, use semiconductors except in ( ).

Q1: 2SC1364 (2SC945)
Q103–107, Q203–207, Q501, 601 : 2SC1364

Q2: 2SD789 (2SD468)
Q101, 201, Q102, 202, Q108, 208, Q111, 211 : 2SC1345 (2SC1345E)
Q109, 209, Q110, Q301 : 2SC2001

Q3: 2SA182 (2SA101)

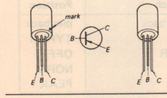

Q4: 2SD414 (2SD439)

Q210, 715: 2SA952

Q320: N13T1

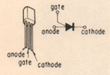

Q502, 602, Q503, 603, Q505, 605, Q701–703, Q705, 707, Q710–712, Q719–726, Q902, 904, Q906, 910, Q912, 717, Q716, 718: 2SC1364 (2SC2001)

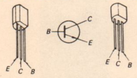

Q504, 604: 2SK30A
Q911: 2SK30A (2SK30)

Q704, 706, Q708, 709, Q901, 903, Q907, 909 : 2SC1173

Q713: 2SB605 (2SB734)

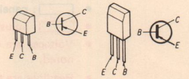

Q714, 905: 2SD571 (2SD774)

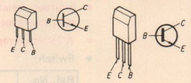

Q908: 2SA1027R (2SA1015)

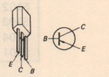

DME701: DM101

D1, 101, 201: 1T22AM (1T22)
D3, 7, 8: 10E2 (10E1)
D707, 715, D721, 722, D737, D905, 906 : 10E2
D4–6, D501–503, D601–603, D701, 702, D706, 708, 709, D711–714, D717–720, D723–728, D730–733, D735, 736, D738, 740, 741 : IS1555
D102–104, D202–204, D703, 710 : IS1555 (1T40)

D2: MV203V

D301, 302 : RD5.6E-B2Z (EQA01-06R)
D903, 904 : RD13E (EQA01-13R)
D729
D908, 909: RD6.8E-B (EQA01-07R)

D320, 739: EQB01-10 (EQA01-10)

D504–511, D604–611, D512–515, D612–615 : SLB26YY
: SLB26UR

D901, 902: S2VB20

IC1: CX065

IC702: CX551

IC101, 201: HA1457

IC703: M53204P (SN7404)

IC102, 202: NJM4559D
IC501: μPC4558C

IC701: BA335

IC502, 602: IR2406G

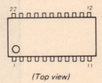

SECTION 5
EXPLODED VIEWS

5-1.

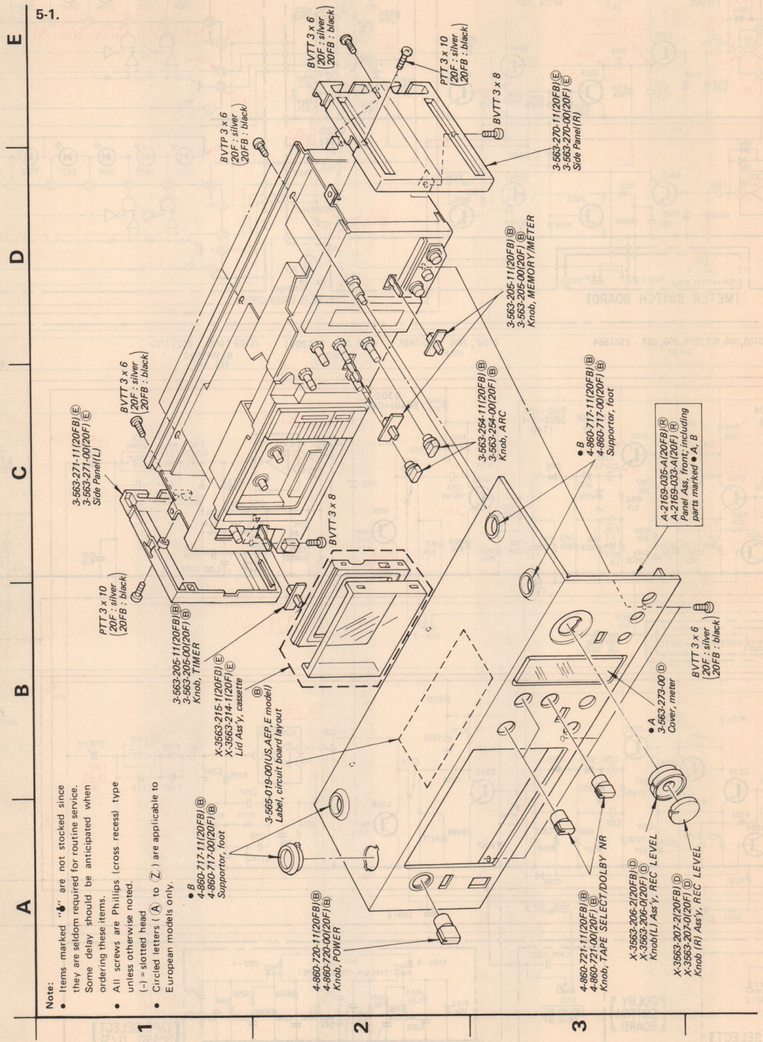

Note:
- Items marked "●" are not stocked since they are seldom required for routine service. Some delay should be anticipated when ordering these items.
- All screws are Philips (cross recess) type unless otherwise noted.
  (–) = slotted head
- Circled letters (Ⓐ to Ⓩ) are applicable to European models only.

5-2.

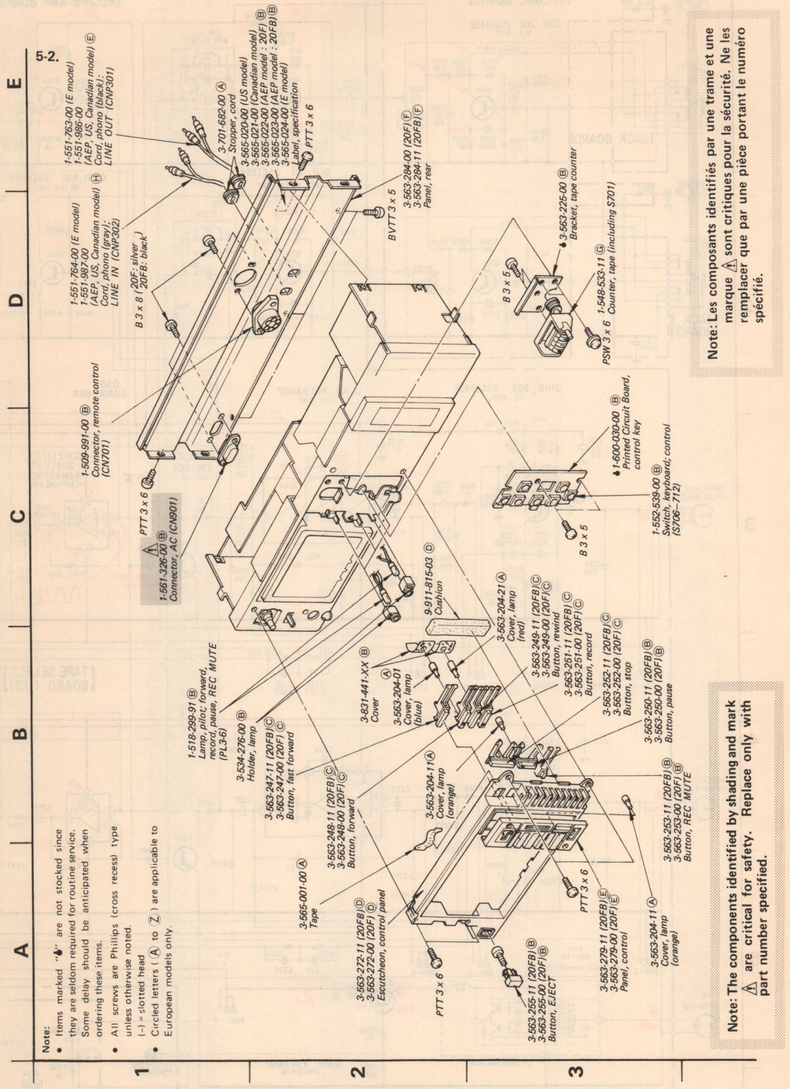

Note:
- Items marked "●" are not stocked since they are seldom required for routine service. Some delay should be anticipated when ordering these items.
- All screws are Philips (cross recess) type unless otherwise noted.
  (–) = slotted head
- Circled letters (Ⓐ to Ⓩ) are applicable to European models only.

Note: Les composants identifiés par une trame et une marque ⚠ sont critiques pour la sécurité. Ne les remplacer que par une pièce portant le numéro spécifié.

Note: The components identified by shading and mark ⚠ are critical for safety. Replace only with part number specified.

Note:
- Items marked "♦" are not stocked since they are seldom required for routine service. Some delay should be anticipated when ordering these items.
- All screws are Phillips (cross recess) type unless otherwise noted.
  (-) = slotted head
- Circled letters (Ⓐ to Ⓩ) are applicable to European models only.

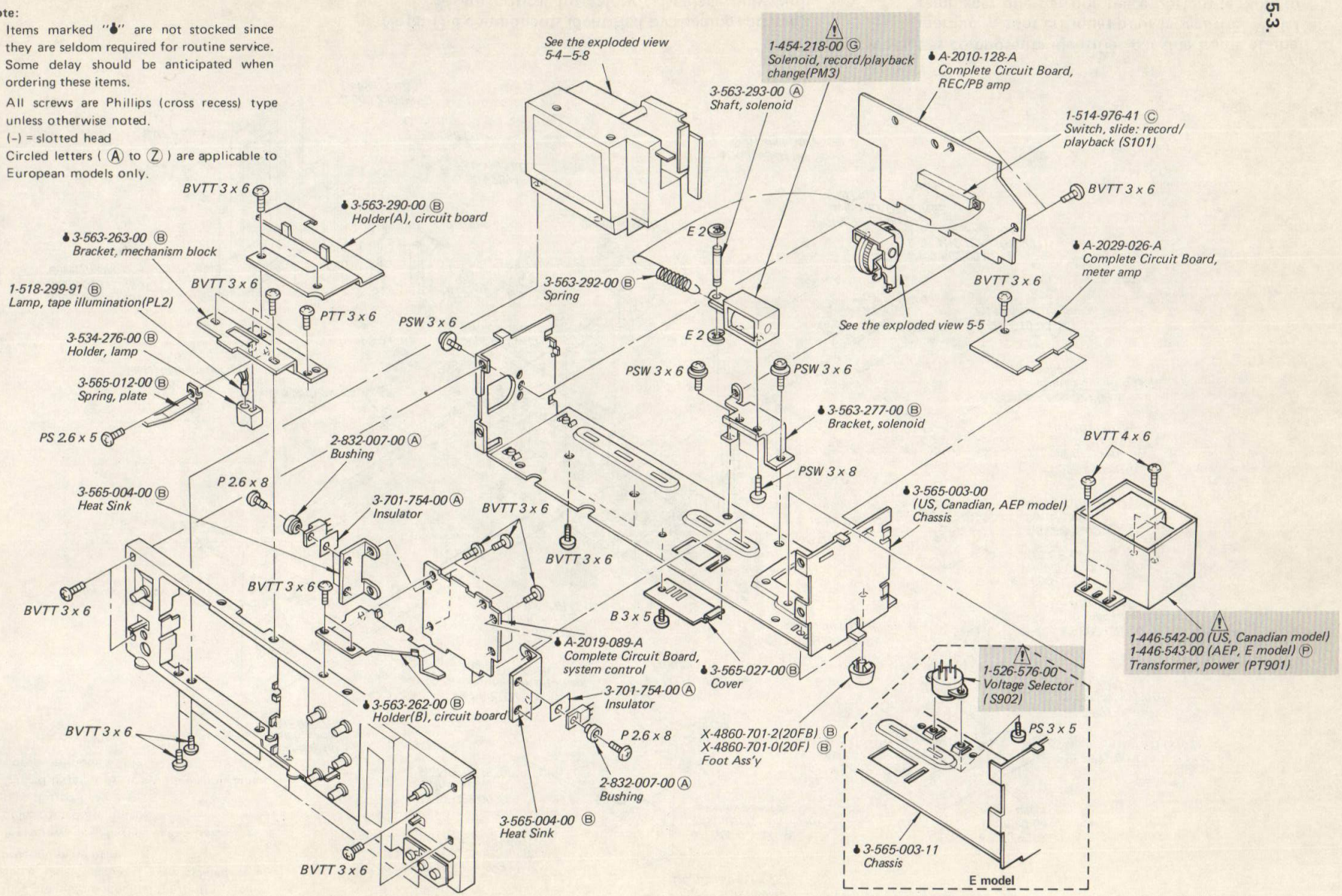

Note: The components identified by shading and mark ⚠ are critical for safety. Replace only with part number specified.

Note: Les composants identifiés par une trame et une marque ⚠ sont critiques pour la sécurité. Ne les remplacer que par une pièce portant le numéro spécifié.

Note:
- Items marked "♠" are not stocked since they are seldom required for routine service. Some delay should be anticipated when ordering these items.
- All screws are Phillips (cross recess) type unless otherwise noted. (-) = slotted head
- Circled letters (Ⓐ to Ⓩ) are applicable to European models only.

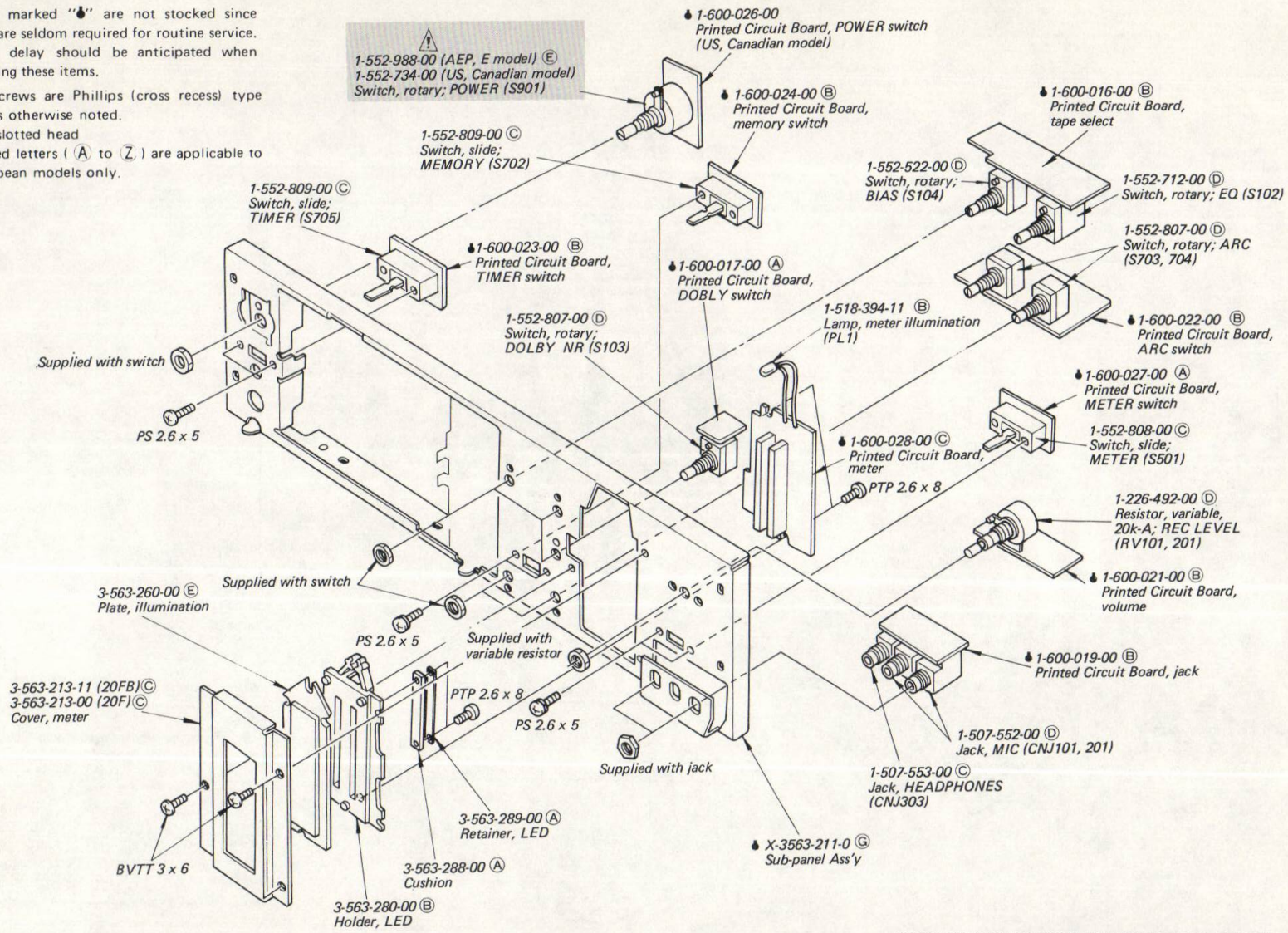

Note: The components identified by shading and mark ⚠ are critical for safety. Replace only with part number specified.

Note: Les composants identifiés par une trame et une marque ⚠ sont critiques pour la sécurité. Ne les remplacer que par une pièce portant le numéro spécifié.

Note:

- Items marked "♦" are not stocked since they are seldom required for routine service. Some delay should be anticipated when ordering these items.
- All screws are Phillips (cross recess) type unless otherwise noted.
  (-) = slotted head
- Circled letters (Ⓐ to Ⓩ) are applicable to European models only.

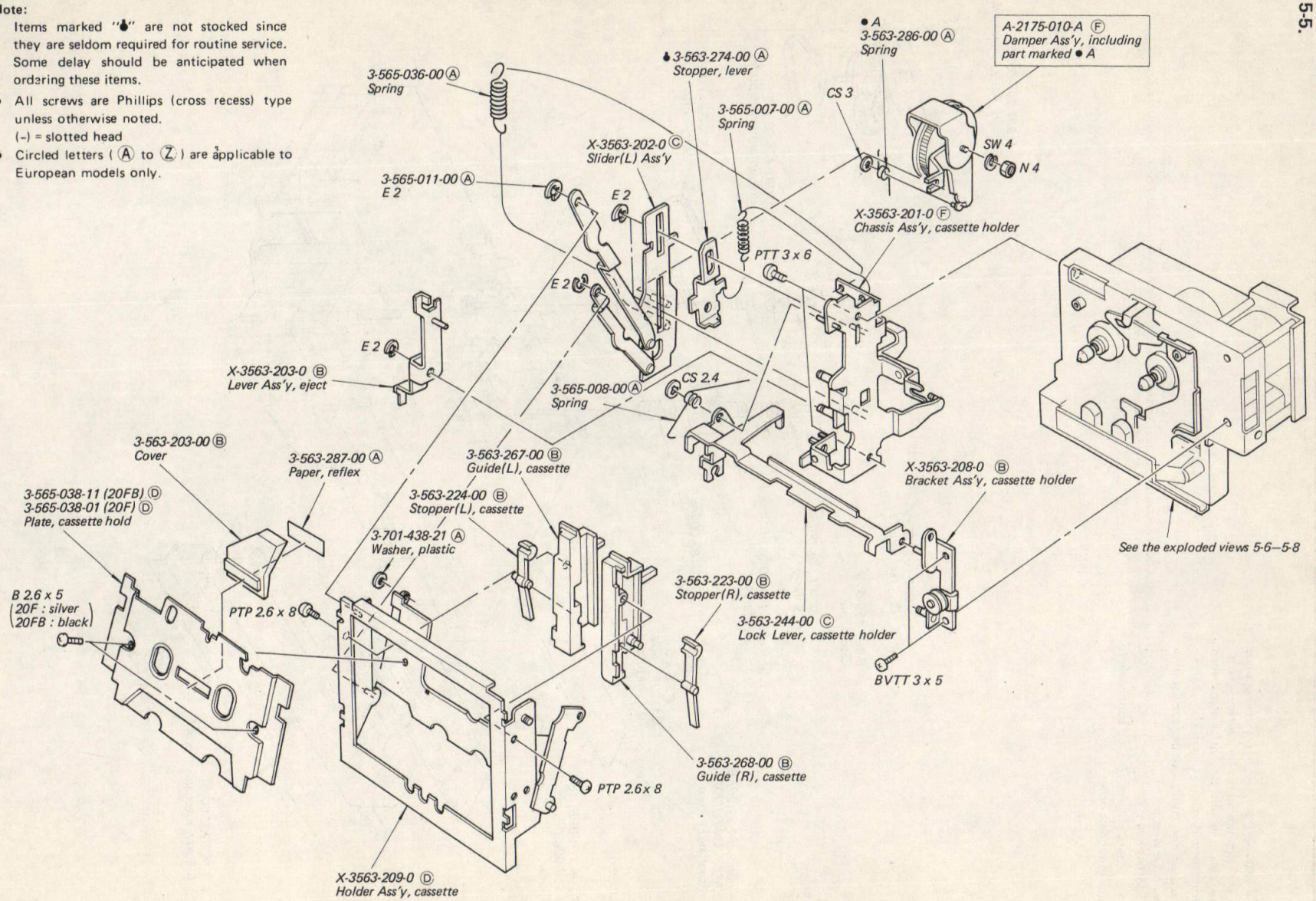

A B C

1 2 3 4 5

5-6.

Note:

- Items marked "♦" are not stocked since they are seldom required for routine service. Some delay should be anticipated when ordering these items.
- All screws are Phillips (cross recess) type unless otherwise noted.
  (-) = slotted head
- Circled letters (Ⓐ to Ⓩ) are applicable to European models only.

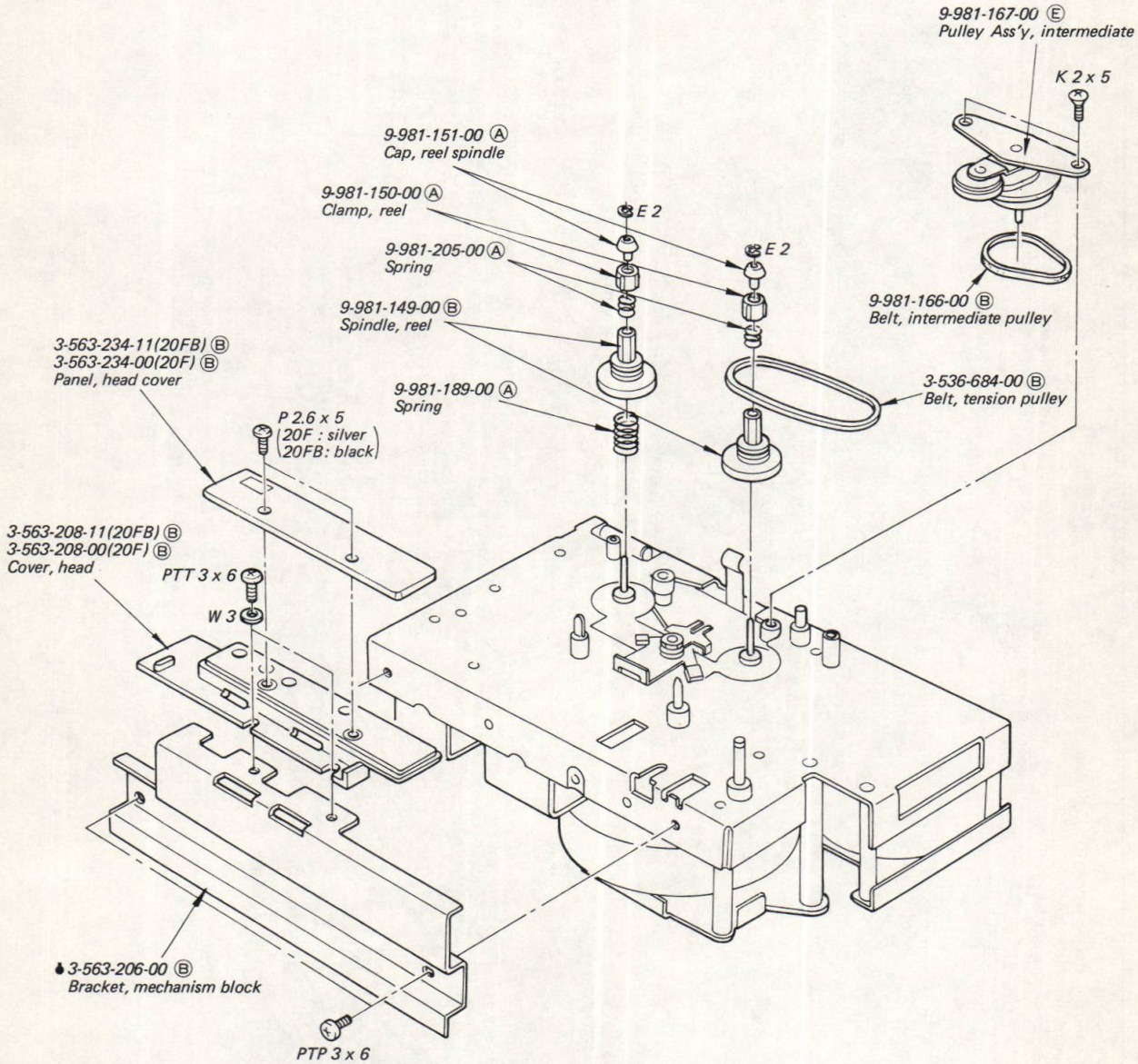

A B C

1 2 3 4 5

5-7.

Note:

- Items marked "♦" are not stocked since they are seldom required for routine service. Some delay should be anticipated when ordering these items.
- All screws are Phillips (cross recess) type unless otherwise noted. (-) = slotted head
- Circled letters (Ⓐ to Ⓩ) are applicable to European models only.

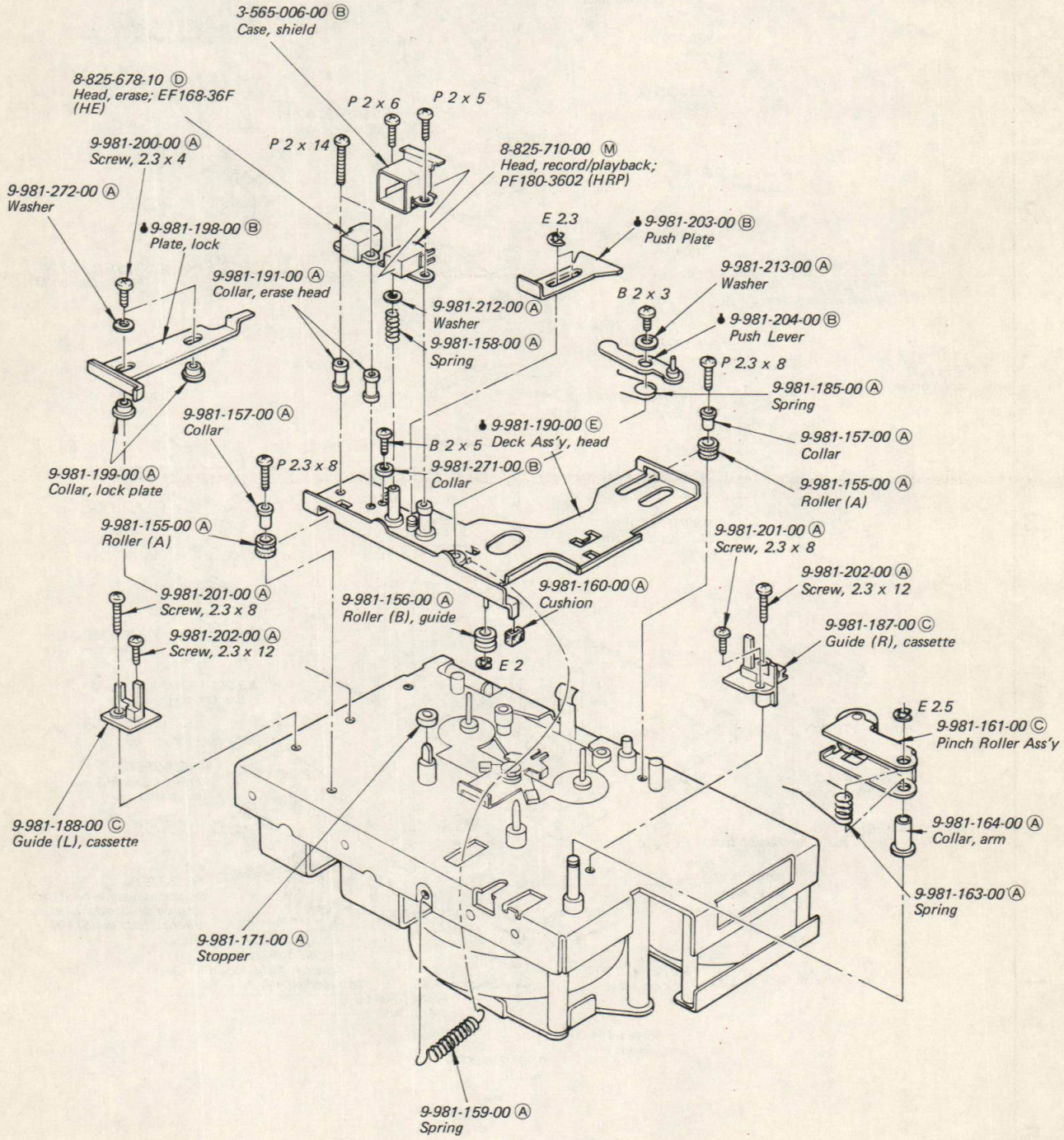

5-8.

Note:

- Items marked "♠" are not stocked since they are seldom required for routine service. Some delay should be anticipated when ordering these items.
- All screws are Phillips (cross recess) type unless otherwise noted. (-) = slotted head
- Circled letters (Ⓐ to Ⓩ) are applicable to European models only.

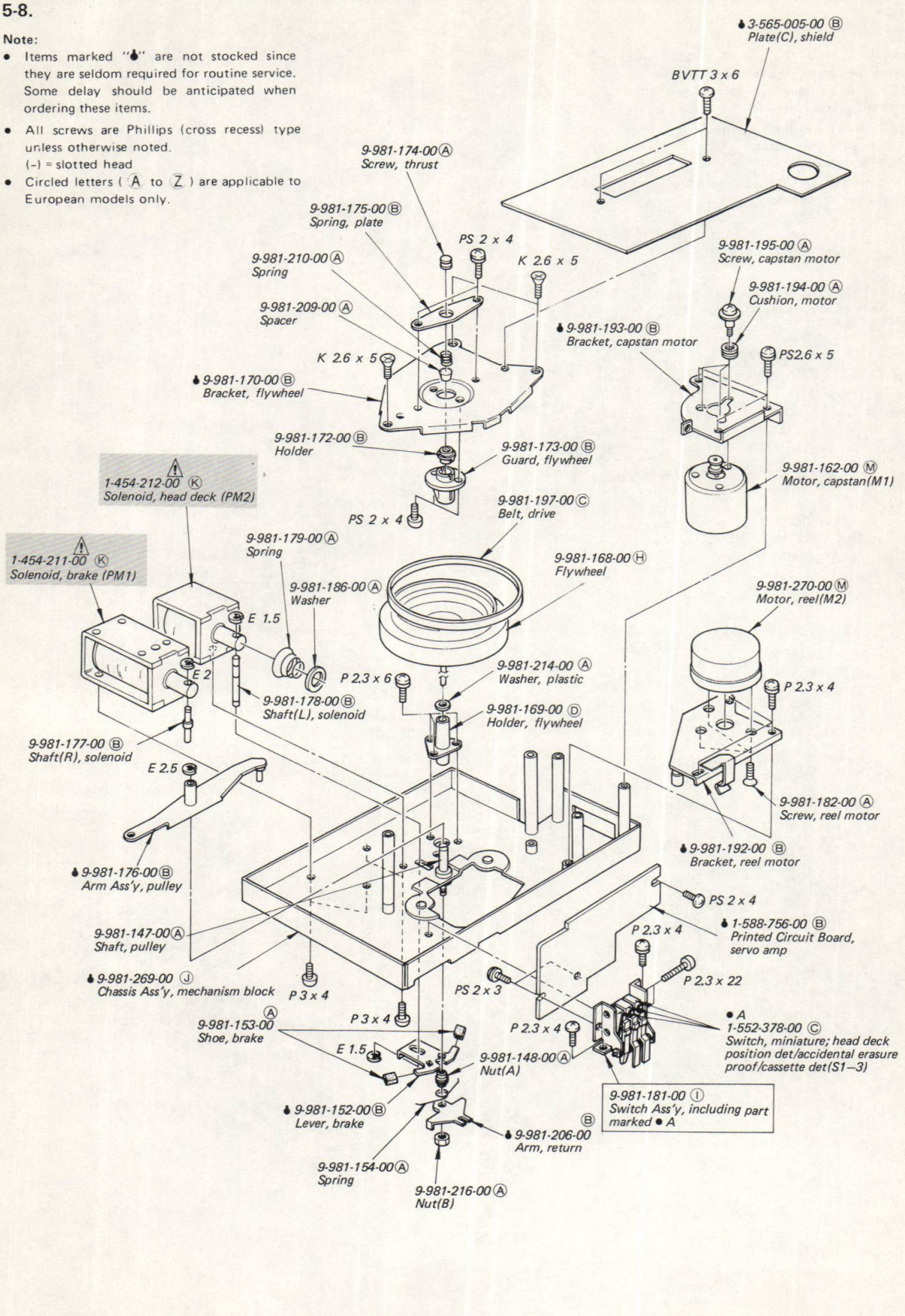

SECTION 6
ELECTRICAL PARTS LIST

Note: Circled letters (Ⓐ to Ⓩ) are applicable to European models only.

Ref. No.	Part No.	Description
		SEMICONDUCTORS
		Transistors
⇒Q1	8-729-663-47	Ⓒ 2SC1364
⇒Q2	8-760-413-10	Ⓑ 2SC1475
⇒Q3	8-729-818-21	Ⓑ 2SA182
⇒Q4	8-729-141-43	Ⓑ 2SD414
⇒Q101, 201 ⇒Q102, 202	8-729-334-58	Ⓑ 2SC1345
Q103, 203 Q104, 204 Q105, 205 Q106, 206 Q107, 207	8-729-663-47	Ⓒ 2SC1364
⇒Q108, 208	8-729-334-58	Ⓑ 2SC1345
Q109, 209	8-729-100-13	Ⓑ 2SC2001
Q110	8-729-100-13	Ⓑ 2SC2001
Q210	8-729-195-23	Ⓑ 2SA952
⇒Q111, 211	8-729-334-58	Ⓑ 2SC1345
Q301	8-729-100-13	Ⓑ 2SC2001
Q320	8-729-101-31	Ⓑ N13T1
Q501, 601	8-729-663-47	Ⓒ 2SC1364
⇒Q502, 602 ⇒Q503, 603	8-729-663-47	Ⓒ 2SC1364
Q504, 604	8-729-203-04	Ⓑ 2SK30A
⇒Q505, 605	8-729-663-47	Ⓒ 2SC1364
⇒Q701–703	8-729-663-47	Ⓒ 2SC1364
Q704	8-729-217-33	Ⓒ 2SC1173
⇒Q705	8-729-663-47	Ⓒ 2SC1364
Q706	8-729-217-33	Ⓒ 2SC1173
⇒Q707	8-729-663-47	Ⓒ 2SC1364
Q708, 709	8-729-217-33	Ⓒ 2SC1173
⇒Q710–712	8-729-663-47	Ⓒ 2SC1364
⇒Q713	8-729-160-51	Ⓑ 2SB605
⇒Q714	8-729-157-11	Ⓑ 2SD571
Q715	8-729-195-23	Ⓑ 2SA952
Q716	8-729-100-13	Ⓑ 2SC2001
⇒Q717	8-729-663-47	Ⓒ 2SC1364
Q718	8-729-100-13	Ⓑ 2SC2001
⇒Q719–726	8-729-663-47	Ⓒ 2SC1364
Q901	8-729-217-33	Ⓒ 2SC1173
⇒Q902	8-729-663-47	Ⓒ 2SC1364
Q903	8-729-217-33	Ⓒ 2SC1173
⇒Q904	8-729-663-47	Ⓒ 2SC1364
⇒Q905	8-729-157-11	Ⓑ 2SD571
⇒Q906	8-729-663-47	Ⓒ 2SC1364
Q907	8-729-217-33	Ⓒ 2SC1173
⇒Q908	8-729-612-77	Ⓑ 2SA1027R
Q909	8-729-217-33	Ⓒ 2SC1173
⇒Q910	8-729-663-47	Ⓒ 2SC1364
⇒Q911	8-729-203-04	Ⓑ 2SK30A
⇒Q912	8-729-663-47	Ⓒ 2SC1364
		ICs
IC1	8-759-600-65	Ⓓ CX065A
IC101, 201	8-759-314-57	Ⓒ HA1457
IC102, 202	8-759-745-59	Ⓓ NJM4559D
IC501	8-759-145-58	Ⓓ μPC4558C
IC502, 602	8-759-924-07	Ⓗ IR2406G
IC701	8-759-933-50	Ⓓ BA335
IC702	8-759-205-51	Ⓚ CX551
⇒IC703	8-759-632-04	Ⓒ M53204P
		Diodes
⇒D1	8-719-422-21	Ⓑ 1T22AM
D2	8-719-920-30	Ⓑ MV203V
⇒D3	8-719-200-02	Ⓑ 10E2
D4–6	8-719-815-55	Ⓑ 1S1555
⇒D7, 8	8-719-200-02	Ⓑ 10E2
⇒D101, 201	8-719-422-21	Ⓑ 1T22AM
⇒D102, 202 ⇒D103, 203 ⇒D104, 204	8-719-815-55	Ⓑ 1S1555
⇒D301, 302	8-719-156-25	Ⓑ RD5.6E-B2Z
⇒D320	8-719-931-10	Ⓑ EQB01-10

⇒: Due to standardization, interchangeable replacements may be substituted for parts specified in the diagrams.

Note: Circled letters (Ⓐ to Ⓩ) are applicable to European models only.

Ref. No.	Part No.	Description
D501–503	8-719-815-55 Ⓑ	1S1555
D504–511	8-719-902-61 Ⓑ	SLB26YY
D512–515	8-719-902-62 Ⓑ	SLB26UR
D601–603	8-719-815-55 Ⓑ	1S1555
D604–611	8-719-902-61 Ⓑ	SLB26YY
D612–615	8-719-902-62 Ⓑ	SLB26UR
D701~703	8-719-815-55 Ⓑ	1S1555
D706	8-719-815-55 Ⓑ	1S1555
D707	8-719-200-02 Ⓑ	10E2
D708, 709	8-719-815-55 Ⓑ	1S1555
⇒ D710	8-719-815-55 Ⓑ	1S1555
D711–714	8-719-815-55 Ⓑ	1S1555
D715	8-719-200-02 Ⓑ	10E2
D717–720	8-719-815-55 Ⓑ	1S1555
D721, 722	8-719-200-02 Ⓑ	10E2
D723–728	8-719-815-55 Ⓑ	1S1555
⇒ D729	8-719-113-07 Ⓑ	RD13E
D730–733	8-719-815-55 Ⓑ	1S1555
D735, 736	8-719-815-55 Ⓑ	1S1555
D737	8-719-200-02 Ⓑ	10E2
D738	8-719-815-55 Ⓑ	1S1555
D739	8-719-931-10 Ⓑ	EQB01-10
D740, 741	8-719-815-55 Ⓑ	1S1555
D901, 902	8-719-502-20 Ⓓ	S2VB20
⇒ D903, 904	8-719-113-07 Ⓑ	RD13E
D905, 906	8-719-200-02 Ⓑ	10E2
⇒ D908, 909	8-719-168-07 Ⓑ	RD6.8E-B
DME701	8-745-101-01 Ⓒ	DM101

CAPACITORS

All capacitors are in μF. Common capacitors are omitted. Refer to the lists on pages 68 and 69 for their part numbers.

Ref. No.	Part No.	Description		
C124, 224	1-102-108-00 Ⓐ	150p		ceramic
C125, 225	1-123-332-00 Ⓐ	4.7	25V	elect
C126, 226	1-102-108-00 Ⓐ	150p		ceramic
C130, 230	1-121-391-00 Ⓐ	1	50V	elect
C131, 231, C154, 254	1-121-651-00 Ⓐ	10	16V	elect
C161, 261	1-123-332-00 Ⓐ	4.7	25V	elect
C320	1-131-192-00 Ⓑ	4.7	10V	tantalum
C914 ⚠	1-161-744-00 Ⓑ	0.01	400V	ceramic (AEP, E model)
	1-161-749-00	0.01	125V	ceramic (US, Canadian model)
CT301	1-141-225-00 Ⓒ	Trimmer, record bias		

RESISTORS

All resistors are in ohms. Common ¼W carbon resistors are omitted. Refer to the list on page 70 for their part numbers.

Ref. No.	Part No.	Description		
R8	⚠1-212-934-00 Ⓐ	1	½W	fusible
⇒ R11	⚠1-207-471-00 Ⓐ	4.7	½W	wirewound (nonflammable)
R741, 742	⚠1-212-849-00 Ⓐ	4.7	¼W	fusible
RV1	1-224-635-00 Ⓑ	22k-B, adjustable; tape speed		
⇒ RV2	1-224-630-00 Ⓑ	470-B, adjustable; forward torque		
RV101, 201	1-226-492-00 Ⓓ	20k-A, variable; REC LEVEL		
RV102, 202	1-226-323-00 Ⓒ	500-B, adjustable; playback level		
RV103, 203	1-226-237-00 Ⓑ	20k-B, adjustable; record level		
RV501, 601	1-224-647-XX Ⓑ	47k-B, adjustable; level meter		
RV502, 602	1-224-644-XX Ⓑ	4.7k-B, adjustable; level meter		

SWITCHES

Ref. No.	Part No.	Description
S1–3	1-552-378-00 Ⓒ	Miniature, head deck det, accidental erasure proof, cassette det
S101	1-514-976-41 Ⓒ	Slide, record/playback
S102	1-552-712-00 Ⓓ	Rotary, EQ
S103	1-552-807-00 Ⓓ	Rotary, DOLBY NR
S104	1-552-522-00 Ⓓ	Rotary, BIAS
S501	1-552-808-00 Ⓒ	Slide, METER
S701	1-548-533-11 Ⓖ	Tape Counter, w/switch
S702	1-552-809-00 Ⓒ	Slide, MEMORY
S703, 704	1-552-807-00 Ⓓ	Rotary, ARC
S705	1-552-809-00 Ⓒ	Slide, TIMER

⇒: Due to standardization, interchangeable replacements may be substituted for parts specified in the diagrams.

Note: The components identified by shading and mark ⚠ are critical for safety. Replace only with part number specified.

Note: Les composants identifiés par une trame et une marque ⚠ sont critiques pour la sécurité. Ne les remplacer que par une pièce portant le numéro spécifié.

Note: Circled letters (Ⓐ to Ⓩ) are applicable to European models only.

Ref. No.	Part No.	Description
S706–712	1-552-539-00 Ⓑ	Keyboard, fast forward, stop, forward, rewind, pause, record, REC MUTE
S901 ⚠	1-552-734-00	Rotary, POWER (US, Canadian model)
	1-552-988-00 Ⓔ	Rotary, POWER (AEP, E model)
S902 ⚠	1-526-576-00	Voltage Selector (E model)

MISCELLANEOUS

CN701	1-509-991-00 Ⓑ	Connector, remote control
CN901	⚠1-561-326-00 Ⓑ	Connector, AC
CNJ101, 201	1-507-552-00 Ⓓ	Jack, MIC
CNJ303	1-507-553-00 Ⓒ	Jack, HEADPHONES
CNP301	1-551-763-00	Cord, phono, LINE OUT (black) (E model)
	1-551-986-00 Ⓔ	Cord, phono; LINE OUT (black) (US, Canadian, AEP model)
CNP302	1-551-764-00	Cord, phono; LINE IN (gray) (E model)
	1-551-987-00 Ⓗ	Cord, phono; LINE IN (gray) (US, Canadian, AEP model)
CP	1-464-102-00 Ⓕ	Bias Osc Unit
HE	8-825-678-10 Ⓓ	Head, erase; EF168-36F
HRP	8-825-710-00 Ⓜ	Head, record/playback; PF180-3602
L1	1-407-161-XX Ⓑ	22 μH, microinductor
L101, 201	1-407-878-00 Ⓑ	27 mH, microinductor
LPF101, 201	1-231-388-00 Ⓓ	Filter, MPX
M1	9-981-162-00 Ⓜ	Motor, capstan
M2	9-981-270-00 Ⓜ	Motor, reel
PL1	1-518-394-11 Ⓑ	Lamp, meter illumination
PL2–6	1-518-299-91 Ⓑ	Lamp, tape illumination,forward, record, pause, REC MUTE
PM1	⚠1-454-211-00 Ⓚ	Solenoid, brake
PM2	⚠1-454-212-00 Ⓚ	Solenoid, head deck
PM3	⚠1-454-218-00 Ⓖ	Solenoid, record/playback change
PT901 ⚠	1-446-542-00	Transformer, power (US, Canadian model)
	1-446-543-00 Ⓟ	Transformer, power (AEP, E model)
TH1	1-800-071-XX Ⓐ	Thermistor

Items marked "♠" are not stocked since they are seldom required for routine service. Some delay should be anticipated when ordering these items.

Note: The components identified by shading and mark ⚠ are critical for safety. Replace only with part number specified.

Ref. No.	Part No.	Description
	⚠1-551-235-00	Cord, power; parallel blade plug (E model)
	⚠1-551-521-00	Cord, power; euro-plug (E model)
	⚠1-551-983-00	Cord, power (US, Canadian model)

COMPLETE CIRCUIT BOARDS

- ♠ A-2010-128-A REC/PB Amp
- ♠ A-2019-089-A System Control
- ♠ A-2029-026-A Meter Amp

PRINTED CIRCUIT BOARDS

- ♠ 1-588-756-00 Ⓑ Servo Amp
- ♠ 1-600-016-00 Ⓑ Tape Select
- ♠ 1-600-017-00 Ⓐ DOLBY Switch
- ♠ 1-600-019-00 Ⓑ Jack
- ♠ 1-600-021-00 Ⓑ Volume
- ♠ 1-600-022-00 Ⓑ ARC Switch
- ♠ 1-600-023-00 Ⓑ TIMER Switch
- ♠ 1-600-024-00 Ⓑ Memory Switch
- ♠ 1-600-026-00 POWER Switch (US, Canadian model)
- ♠ 1-600-027-00 Ⓐ METER Switch
- ♠ 1-600-028-00 Ⓒ Meter
- ♠ 1-600-030-00 Ⓑ Control Key

ACCESSORIES AND PAKING MATERIALS

Part No.		Description
⚠1-534-840-XX	Ⓔ	Cord, power (DK-38) (AEP model)
3-563-296-00	Ⓐ	Sheet, protection
3-565-030-00	Ⓓ	Carton (20F)
3-565-031-00	Ⓓ	Carton (20FB)
3-565-032-00	Ⓑ	Cushion
3-701-630-00	Ⓐ	Bag, plastic
3-701-730-00	Ⓑ	Bag, plastic
3-770-751-11	Ⓖ	Manual, instruction (AEP, E model)
3-770-751-21		Manual, instruction (US model)
3-770-751-21 3-794-548-31		Manual, instruction (Canadian model)
3-793-828-11	Ⓐ	Card, caution cassette
3-794-233-21		Leaflet (US model)

Note: Les composants identifiés par une trame et une marque ⚠ sont critiques pour la sécurité. Ne les remplacer que par une pièce portant le numéro spécifié.

ELECTROLYTIC CAPACITORS

Note: Circled letter (Ⓐ to Ⓩ) are applicable to European models only.

RATING → : Use the high voltage rated one.

CAP. (μF)	6.3 VOLT. PART No.	10 VOLT. PART No.	16 VOLT. PART No.	25 VOLT. PART No.	35 VOLT. PART No.	50 VOLT. PART No.
0.47					→	1-121-726-00 Ⓐ
1.0					→	1-121-391-00 Ⓐ
2.2					→	1-121-450-00 Ⓐ
3.3	→	→	→	1-121-392-00 Ⓐ	→	1-121-393-00 Ⓐ
4.7	→	→	→	1-121-395-00 Ⓐ	→	1-121-396-00 Ⓐ
10	→	→	1-121-651-00 Ⓐ	1-121-398-00 Ⓐ	→	1-121-738-00 Ⓐ
22	→	→	1-121-479-00 Ⓐ	1-121-480-00 Ⓐ	1-121-662-00 Ⓐ	1-121-152-00 Ⓐ
33	→	→	1-121-403-00 Ⓐ	1-121-404-00 Ⓐ	1-121-652-00 Ⓑ	1-121-405-00 Ⓐ
47	→	1-121-352-00 Ⓐ	1-121-409-00 Ⓐ	1-121-410-00 Ⓐ	1-121-653-00 Ⓑ	1-121-411-00 Ⓐ
100	→	1-121-414-00 Ⓐ	1-121-415-00 Ⓐ	1-121-416-00 Ⓐ	1-121-357-00 Ⓑ	1-121-417-00 Ⓑ
220	1-121-419-00 Ⓑ	1-121-420-00 Ⓑ	1-121-421-00 Ⓐ	1-121-422-00 Ⓑ	1-121-261-00 Ⓒ	1-121-423-00 Ⓑ
330	1-121-751-00 Ⓑ	1-121-805-00 Ⓑ	1-121-521-00 Ⓒ	1-121-654-00 Ⓑ	1-121-655-00 Ⓓ	1-121-656-00 Ⓒ
470	1-121-424-00 Ⓑ	1-121-425-00 Ⓒ	1-121-426-00 Ⓒ	1-121-733-00 Ⓑ	1-121-361-00 Ⓔ	1-121-810-00 Ⓓ
1000	–	1-121-736-00 Ⓒ	1-121-245-00 Ⓓ	1-121-657-00 Ⓓ	1-121-388-00 Ⓔ	1-123-061-00 Ⓕ
2200	1-121-658-00 Ⓑ	1-121-659-00 Ⓒ	1-121-660-00 Ⓓ	1-123-067-00 Ⓕ	1-121-984-00 Ⓕ	–
3300	1-121-661-00 Ⓓ	1-123-075-00 Ⓔ	1-123-071-00 Ⓕ	–	–	–

CAP. (μF)	100 VOLT. PART No.	160 VOLT. PART No.	250 VOLT. PART No.	350 VOLT. PART No.
0.47	–	–	–	–
1.0	1-123-249-00 Ⓐ	1-123-252-00 Ⓐ	1-123-003-00 Ⓑ	1-121-168-00 Ⓑ
2.2	1-123-250-00 Ⓐ	1-123-026-00 Ⓑ	–	1-123-028-00 Ⓑ
3.3	1-121-995-00 Ⓐ	–	1-123-004-00 Ⓑ	1-123-006-00 Ⓒ
4.7	1-123-255-00 Ⓐ	1-121-246-00 Ⓑ	1-121-759-00 Ⓑ	1-123-007-00 Ⓓ
10	1-121-126-00 Ⓑ	1-121-999-00 Ⓑ	1-123-254-00 Ⓒ	1-123-008-00 Ⓓ
22	1-121-996-00 Ⓒ	1-123-253-00 Ⓒ	1-123-005-00 Ⓓ	1-123-022-00 Ⓓ
33	1-121-997-00 Ⓒ	1-121-757-00 Ⓒ	–	–
47	1-123-251-00 Ⓒ	1-121-919-00 Ⓒ	–	–
100	1-123-084-00 Ⓔ	–	–	–

CERAMIC CAPACITORS Ⓐ

RATING

CAP. (pF)	50 VOLT. PART No.	CAP. (pF)	50 VOLT. PART No.	CAP. (pF)	50 VOLT. PART No.	CAP. (μF)	50 VOLT. PART No.
0.5	1-101-837-00	22	1-102-959-00	150	1-101-361-00	0.001	1-102-074-00
0.75	1-101-586-00	24	1-102-960-00	160	1-101-367-00	0.0012	1-102-118-00
1.0	1-102-934-00	27	1-102-961-00	180	1-102-976-00	0.0015	1-102-119-00
1.5	1-101-576-00	30	1-102-962-00	200	1-102-977-00	0.0018	1-102-120-00
2.0	1-102-935-00	33	1-102-963-00	220	1-102-978-00	0.0022	1-102-121-00
3	1-102-936-00	36	1-102-964-00	240	1-102-979-00	0.0027	1-102-122-00
4	1-102-937-00	39	1-102-965-00	270	1-102-980-00	0.0033	1-102-123-00
5	1-102-942-00	43	1-102-966-00	300	1-102-981-00	0.0039	1-102-124-00
6	1-102-943-00	47	1-101-880-00	330	1-102-820-00	0.0047	1-102-125-00
7	1-102-944-00	51	1-101-882-00	360	1-102-821-00	0.0056	1-102-126-00
8	1-102-945-00	56	1-101-884-00	390	1-102-822-00	0.0068	1-102-127-00
9	1-102-946-00	62	1-101-886-00	430	1-102-823-00	0.0082	1-102-128-00
10	1-102-947-00	68	1-101-888-00	470	1-102-824-00	0.01	1-102-129-00
11	1-102-948-00	75	1-101-890-00	510	1-101-059-00	0.022	1-101-005-00
12	1-102-949-00	82	1-102-971-00	560	1-102-115-00	0.047	1-101-006-00
13	1-102-950-00	91	1-102-972-00	680	1-102-116-00		
15	1-102-951-00	100	1-102-973-00	820	1-102-117-00		
16	1-102-952-00	110	1-102-815-00				
18	1-102-953-00	120	1-102-816-00				
20	1-102-958-00	130	1-101-081-00				

0.001μF = 1,000pF

CERAMIC (SEMICONDUCTOR) CAPACITORS Ⓐ

RATING → : Use the high voltage rated one.

CAP. (μF)	25 VOLT. PART No.	50 VOLT. PART No.	CAP. (μF)	25 VOLT. PART No.	50 VOLT. PART No.
0.001	→	1-161-039-00	0.018	1-161-016-00	1-161-054-00
0.0012	→	1-161-040-00	0.022	1-161-017-00	1-161-055-00
0.0015		1-161-041-00	0.027	1-161-018-00	1-161-056-00
0.0018		1-161-042-00	0.033	1-161-019-00	1-161-057-00
0.0022		1-161-043-00	0.039	1-161-010-00	1-161-058-00
0.0027	→	1-161-044-00	0.047	1-161-021-00	1-161-059-00
0.0033	→	1-161-045-00	0.056	→	1-161-060-00
0.0039	→	1-161-046-00	0.068	→	1-161-061-00
0.0047	→	1-161-047-00	0.082	1-161-024-00	1-161-062-00
0.0056	→	1-161-048-00	0.1	1-161-025-00	1-161-063-00
0.0068	→	1-161-049-00			
0.0082	1-161-012-00	1-161-050-00			
0.01	1-161-013-00	1-161-051-00			
0.012	→	1-161-052-00			
0.015	1-161-015-00	1-161-053-00			

MYLAR CAPACITORS Ⓐ

Note: Circled letters (Ⓐ to Ⓩ) are applicable to European models only.

CAP. (μF)	RATING 50 VOLT. PART No.	100 VOLT. PART No.	200 VOLT. PART No.	CAP. (μF)	50 VOLT. PART No.	100 VOLT. PART No.	200 VOLT. PART No.	CAP. (μF)	50 VOLT. PART No.	100 VOLT. PART No.	200 VOLT. PART No.
0.001	1-108-227-00	1-108-365-00	1-108-409-00	0.01	1-108-239-00	1-108-377-00	1-108-421-00	0.1	1-108-251-00	1-108-389-00	1-108-433-00
0.0012	1-108-351-00	1-108-366-00	1-108-410-00	0.012	1-108-357-00	1-108-378-00	1-108-422-00	0.12	1-108-363-00	1-108-390-00	1-108-434-00
0.0015	1-108-228-00	1-108-367-00	1-108-411-00	0.015	1-108-240-00	1-108-379-00	1-108-423-00	0.15	1-108-252-00	1-108-391-00	1-108-435-00
0.0018	1-108-352-00	1-108-368-00	1-108-412-00	0.018	1-108-358-00	1-108-380-00	1-108-424-00	0.18	1-108-364-00	1-108-392-00	1-108-436-00
0.0022	1-108-230-00	1-108-369-00	1-108-413-00	0.022	1-108-242-00	1-108-381-00	1-108-425-00	0.22	1-108-254-00	1-108-393-00	1-108-437-00
0.0027	1-108-353-00	1-108-370-00	1-108-414-00	0.027	1-108-359-00	1-108-382-00	1-108-426-00	0.27	1-108-854-00	–	–
0.0033	1-108-232-00	1-108-371-00	1-108-415-00	0.033	1-108-244-00	1-108-383-00	1-108-427-00	0.33	1-108-855-00	–	–
0.0039	1-108-354-00	1-108-372-00	1-108-416-00	0.039	1-108-360-00	1-108-384-00	1-108-428-00	0.39	1-108-856-00	–	–
0.0047	1-108-234-00	1-108-373-00	1-108-417-00	0.047	1-108-246-00	1-108-385-00	1-108-429-00	0.47	1-108-857-00	–	–
0.0056	1-108-355-00	1-108-374-00	1-108-418-00	0.056	1-108-361-00	1-108-386-00	1-108-430-00				
0.0068	1-108-237-00	1-108-375-00	1-108-419-00	0.068	1-108-249-00	1-108-387-00	1-108-431-00				
0.0082	1-108-356-00	1-108-376-00	1-108-420-00	0.082	1-108-362-00	1-108-388-00	1-108-432-00				

TANTALUM CAPACITORS

→: Use the high voltage rated one.

CAP. (μF)	RATING 3.15 VOLT. PART No.	6.3 VOLT. PART No.	10 VOLT. PART No.	16 VOLT. PART No.	20 VOLT. PART No.	25 VOLT. PART No.	35 VOLT. PART No.
0.01					→	→	1-131-396-00 Ⓑ
0.015						→	1-131-397-00 Ⓑ
0.022						→	1-131-398-00 Ⓑ
0.033						→	1-131-399-00 Ⓑ
0.047						→	1-131-400-00 Ⓑ
0.068					→	→	1-131-401-00 Ⓑ
0.1					→	→	1-131-402-00 Ⓑ
0.15					→	→	1-131-403-00 Ⓑ
0.22					→	→	1-131-404-00 Ⓑ
0.33					→	1-131-409-00 Ⓑ	1-131-405-00 Ⓑ
0.47	–	–	–	–	1-131-412-00 Ⓑ	→	1-131-406-00 Ⓑ
0.68	–	–	–	1-131-415-00 Ⓑ	→	1-131-410-00 Ⓑ	1-131-407-00 Ⓑ
1.0	–	–	1-131-418-00 Ⓑ	–	1-131-413-00 Ⓑ	→	1-131-408-00 Ⓑ
1.5	–	1-131-421-00 Ⓑ	–	1-131-416-00 Ⓑ	→	1-131-411-00 Ⓑ	1-131-348-00 Ⓑ
2.2	1-131-424-00 Ⓑ	–	1-131-419-00 Ⓑ	–	1-131-414-00 Ⓑ	1-131-355-00 Ⓑ	1-131-349-00 Ⓑ
3.3	–	1-131-422-00 Ⓑ	–	1-131-417-00 Ⓑ	1-131-362-00 Ⓑ	1-131-356-00 Ⓑ	1-131-350-00 Ⓑ
4.7	1-131-425-00 Ⓑ	–	1-131-420-00 Ⓑ	1-131-369-00 Ⓑ	1-131-363-00 Ⓑ	1-131-357-00 Ⓑ	1-131-351-00 Ⓒ
6.8	–	1-131-423-00 Ⓑ	1-131-376-00 Ⓑ	1-131-370-00 Ⓑ	1-131-364-00 Ⓑ	1-131-358-00 Ⓒ	1-131-352-00 Ⓒ
10	1-131-426-00 Ⓑ	1-131-383-00 Ⓑ	1-131-377-00 Ⓑ	1-131-371-00 Ⓑ	1-131-365-00 Ⓒ	1-131-359-00 Ⓒ	1-131-353-00 Ⓓ
15	1-131-390-00 Ⓑ	1-131-384-00 Ⓑ	1-131-378-00 Ⓑ	1-131-372-00 Ⓑ	1-131-366-00 Ⓒ	1-131-360-00 Ⓓ	–
22	1-131-391-00 Ⓑ	1-131-385-00 Ⓑ	1-131-379-00 Ⓒ	1-131-373-00 Ⓒ	1-131-367-00 Ⓓ		
33	1-131-392-00 Ⓑ	1-131-386-00 Ⓒ	1-131-380-00 Ⓒ	1-131-374-00 Ⓓ			
47	1-131-393-00 Ⓒ	1-131-387-00 Ⓒ	1-131-381-00 Ⓓ	–			
68	1-131-394-00 Ⓑ	1-131-388-00 Ⓒ	–	–			
100	1-131-395-00 Ⓓ	–	–	–			

TANTALUM CAPACITORS

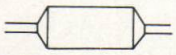

CAP. (μF)	RATING 3 VOLT. PART No.	6.3 VOLT. PART No.	10 VOLT. PART No.	16 VOLT. PART No.	20 VOLT. PART No.	35 VOLT. PART No.
0.033						1-131-273-00 Ⓔ
0.047						1-131-274-00 Ⓔ
0.068						1-131-275-00 Ⓔ
0.1						1-131-276-00 Ⓓ
0.15						1-131-277-00 Ⓓ
0.22			–	–	1-131-262-00 Ⓓ	1-131-278-00 Ⓓ
0.33			–	–	1-131-263-00 Ⓓ	1-131-279-00 Ⓓ
0.47			1-131-169-00 Ⓓ	–	1-131-264-00 Ⓓ	1-131-280-00 Ⓓ
0.68			–	1-131-258-00 Ⓓ	1-131-265-00 Ⓓ	1-131-281-00 Ⓓ
1.0			1-131-254-00 Ⓓ	–	1-131-266-00 Ⓓ	1-131-282-00 Ⓓ
1.5		1-131-250-00 Ⓓ	–	–	1-131-267-00 Ⓓ	1-131-283-00 Ⓔ
2.2		–	–	1-131-259-00 Ⓓ	1-131-268-00 Ⓓ	1-131-284-00 Ⓔ
3.3		–	1-131-255-00 Ⓓ	–	1-131-269-00 Ⓓ	–
4.7		1-131-251-00 Ⓔ	1-131-171-00 Ⓓ	–	1-131-270-00 Ⓓ	–
6.8		–	–	1-131-260-00 Ⓓ	1-131-271-00 Ⓔ	–
10	–	–	1-131-256-00 Ⓓ	–	1-131-272-00 Ⓔ	–
15	–	1-131-252-00 Ⓓ	–	1-131-261-00 Ⓔ		
22	–	–	1-131-257-00 Ⓔ	–		
33	1-131-176-00 Ⓓ	1-131-253-00 Ⓔ	1-131-173-00 Ⓒ	–		
47	1-131-288-00 Ⓕ	1-131-174-00 Ⓓ	–	–		
100	1-131-177-00 Ⓓ					

1/4 WATT CARBON RESISTORS Ⓐ

Note: Circled letter Ⓐ is applicable to European models only.

Ω	Part No.	Ω	Part No.	Ω	Part No.	Ω	Part No.	Ω	Part No.	Ω	Part No.	Ω	Part No.
1.0	1-246-401-00	10	1-246-425-00	100	1-246-449-00	1.0k	1-246-473-00	10k	1-246-497-00	100k	1-246-521-00	1.0M	1-246-545-00
1.1	1-246-402-00	11	1-246-426-00	110	1-246-450-00	1.1k	1-246-474-00	11k	1-246-498-00	110k	1-246-522-00	1.1M	1-210-814-00
1.2	1-246-403-00	12	1-246-427-00	120	1-246-451-00	1.2k	1-246-475-00	12k	1-246-499-00	120k	1-246-523-00	1.2M	1-210-815-00
1.3	1-246-404-00	13	1-246-428-00	130	1-246-452-00	1.3k	1-246-576-00	13k	1-246-500-00	130k	1-246-524-00	1.3M	1-210-816-00
1.5	1-246-405-00	15	1-246-429-00	150	1-246-453-00	1.5k	1-246-577-00	15k	1-246-501-00	150k	1-246-525-00	1.5M	1-210-817-00
1.6	1-246-406-00	16	1-246-430-00	160	1-246-454-00	1.6k	1-246-578-00	16k	1-246-502-00	160k	1-246-526-00	1.6M	1-210-818-00
1.8	1-246-407-00	18	1-246-431-00	180	1-246-455-00	1.8k	1-246-579-00	18k	1-246-503-00	180k	1-246-527-00	1.8M	1-210-819-00
2.0	1-246-408-00	20	1-246-432-00	200	1-246-456-00	2.0k	1-246-580-00	20k	1-246-504-00	200k	1-246-528-00	2.0M	1-210-820-00
2.2	1-246-409-00	22	1-246-433-00	220	1-246-457-00	2.2k	1-246-581-00	22k	1-246-505-00	220k	1-246-529-00	2.2M	1-210-821-00
2.4	1-246-410-00	24	1-246-434-00	240	1-246-458-00	2.4k	1-246-582-00	24k	1-246-506-00	240k	1-246-530-00	2.4M	1-244-754-00
2.7	1-246-411-00	27	1-246-435-00	270	1-246-459-00	2.7k	1-246-583-00	27k	1-246-507-00	270k	1-246-531-00	2.7M	1-244-755-00
3.0	1-246-412-00	30	1-246-436-00	300	1-246-460-00	3.0k	1-246-584-00	30k	1-246-508-00	300k	1-246-532-00	3.0M	1-244-756-00
3.3	1-246-413-00	33	1-246-437-00	330	1-246-461-00	3.3k	1-246-585-00	33k	1-246-509-00	330k	1-246-533-00	3.3M	1-244-757-00
3.6	1-246-414-00	36	1-246-438-00	360	1-246-462-00	3.6k	1-246-586-00	36k	1-246-510-00	360k	1-246-534-00	3.6M	1-244-758-00
3.9	1-246-415-00	39	1-246-439-00	390	1-246-463-00	3.9k	1-246-587-00	39k	1-246-511-00	390k	1-246-535-00	3.9M	1-244-759-00
4.3	1-246-416-00	43	1-246-440-00	430	1-246-464-00	4.3k	1-246-488-00	43k	1-246-512-00	430k	1-246-536-00	4.3M	1-244-760-00
4.7	1-246-417-00	47	1-246-441-00	470	1-246-465-00	4.7k	1-246-489-00	47k	1-246-513-00	470k	1-246-537-00	4.7M	1-244-761-00
5.1	1-246-418-00	51	1-246-442-00	510	1-246-466-00	5.1k	1-246-490-00	51k	1-246-514-00	510k	1-246-538-00	5.1M	1-244-762-00
5.6	1-246-419-00	56	1-246-443-00	560	1-246-467-00	5.6k	1-246-491-00	56k	1-246-515-00	560k	1-246-539-00		
6.2	1-246-420-00	62	1-246-444-00	620	1-246-468-00	6.2k	1-246-492-00	62k	1-246-516-00	620k	1-246-540-00		
6.8	1-246-421-00	68	1-246-445-00	680	1-246-469-00	6.8k	1-246-493-00	68k	1-246-517-00	680k	1-246-541-00		
7.5	1-246-422-00	75	1-246-446-00	750	1-246-470-00	7.5k	1-246-494-00	75k	1-246-518-00	750k	1-246-542-00		
8.2	1-246-423-00	82	1-246-447-00	820	1-246-471-00	8.2k	1-246-495-00	82k	1-246-519-00	820k	1-246-543-00		
9.1	1-246-424-00	91	1-246-448-00	910	1-246-472-00	9.1k	1-246-496-00	91k	1-246-520-00	910k	1-246-544-00		

HARDWARE NOMENCLATURE

Screw: – P 3 x 10

- *L: Length in mm*
- *D: Diameter in mm*
- *Type of head*
- *Indicated slotted-head only. Unless otherwise indicated, it means cross-recessed head (Phillips type).*

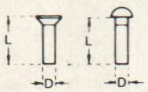

Nut, Washer, Retaining ring: N 3

- *Diameter of usable screw or shaft*
- *Reference designation*

Reference Designation	Shape	Description	Remarks
		SCREWS	
P		pan-head screw	binding-head (B) screw for replacement
PWH		pan-head screw with washer face	binding-head (B) screw and flat washer for replacement
PS PSP		pan-head screw with spring washer	binding-head (B) screw and spring washer for replacement
PSW PSPW		pan-head screw with spring and flat washers	binding-head (B) screw and spring and flat washers for replacement
R		round-head screw	binding-head (B) screw for replacement
K		flat-countersunk-head screw	
RK		oval-countersunk-head screw	
B		binding-head screw	
T		truss-head screw	binding-head (B) screw for replacement
F		flat-fillister-head screw	
RF		fillister-head screw	
BV		braizer-head screw	

Reference Designation	Shape	Description	Remarks
		SELF-TAPPING SCREWS	
TA		self-tapping screw	ex: TA, P 3 x 10
PTP		pan-head self-tapping screw	binding-head self-tapping (TA, B) screw for replacement
PTPWH		pan-head self-tapping screw with washer face	binding-head self tapping (TA, B) screw and flat washer for replacement
PTTWH		pan-head thread-rolling screw with washer face	binding-head (B) screw and flat washer for replacement
		SET SCREWS	
SC		set screw	
SC		hexagon-socket set screw	ex: SC 2.6 x 4, hexagon socket
		NUT	
N		nut	
		WASHERS	
W		flat washer	
SW		spring washer	
LW		internal-tooth lock washer	ex: LW3, internal
LW		external-tooth lock washer	ex: LW3, external
		RETAINING RINGS	
E		retaining ring	
G		grip-type retaining ring	

9-954-737-11

Sony Corporation

7910588-1
Printed in Japan