TA-V715T

SERVICE MANUAL

AEP Model
UK Model
E Model

SPECIFICATIONS

Model available in UK, AEP, and West Germany:

Continuous RMS power output
60 W + 60 W
(6 ohms, at 1 kHz, 5% THD)
Music power output
80 W + 80 W
(6 ohms, at 1 kHz, 5% THD)

Model available in E, Saudi Arabia:

Peak music power output
610 W (6 ohms)

Inputs

Jacks	Sensitivity	Impedance
PHONO	2 mV	50 k ohms
CD	150 mV	50 k ohms
VIDEO/AUX	150 mV	50 k ohms
ADAPTOR	150 mV	50 k ohms
DAT	150 mV	50 k ohms
TAPE	150 mV	50 k ohms
MIC	1 mV	10 k ohms

Outputs

Jacks	Voltage	Impedance
VIDEO/AUX	150 mV	4.7 k ohms
DAT	150 mV	4.7 k ohms
TAPE	150 mV	4.7 k ohms

Frequency response
PHONO RIAA curve ±0.5 dB
CD, VIDEO/AUX, TUNER, DAT, TAPE: 15 Hz to 50 kHz $^{+0}_{-3}$dB
MIC 100 Hz to 10 kHz $^{+0}_{-6}$dB

General
Power requirements
UK model: 240 V AC, 50 Hz
AEP, West Germany model: 220 V AC, 50 Hz
E, Saudi Arabia model: 120 V, 220 V or 240 V AC, adjustable by AC voltage selector
Power consumption
UK model: 240 W
AEP, West Germany model: 100 W
E, Saudi Arabia model: 120 W
AC outlets 2 unswitched, 100 W max.
Dimensions Approx. 355 × 117 × 330 mm (w/h/d)
(14 × 4⅝ × 13 inches)
incl. projecting parts and controls
Weight Approx. 6 kg (13 lb 4 oz)
Supplied accessories
Remote commander (1)
Sony SUM-3 (NS) battery (2)

STEREO AMPLIFIER

SONY®

MODEL IDENTIFICATION

– Specification Label –

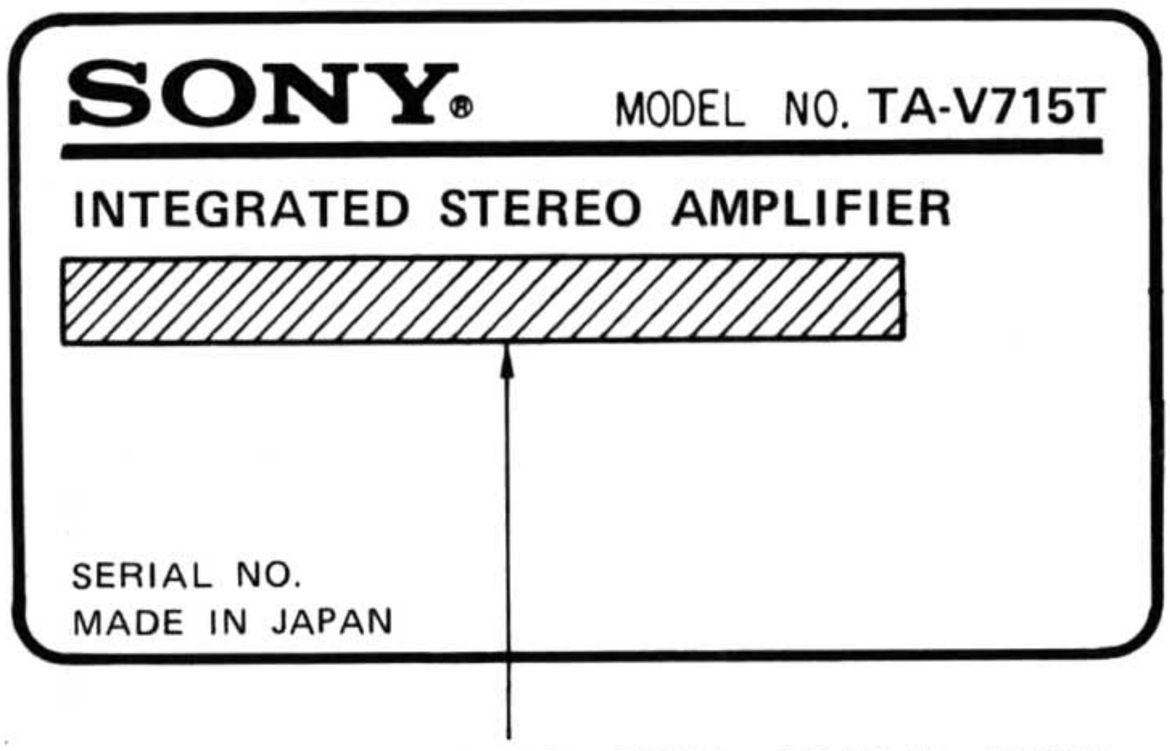

AEP, West Germany Model: AC: 220 V ~ 50/60 Hz 100 W
UK Model: AC: 240 V ~ 50/60 Hz 240 W
E, Saudi Arabia Model: AC: 120/220/240 V ~ 50/60 Hz 120 W

TABLE OF CONTENTS

Section	*Title*	*Page*
	Specifications	1
	Model Identification	2
	Servicing Notes	2
1.	**GENERAL**	
	Parts Identification	3
	Connecting the System	4
2.	**DIAGRAMS**	
2-1.	Printed Wiring Boards	6
2-2.	Schematic Diagram	11
3.	**EXPLODED VIEWS**	16
4.	**ELECTRICAL PARTS LIST**	19

SERVICING NOTES

On operating voltage

Before operating the unit, check that the operating voltage of your unit is identical with the voltage of your local power supply.

Where purchased	Operating voltage
UK Model	240 V AC
AEP, West Germany Model	220 V AC
E, Saudi Arabia Model	120 V, 220 V or 240 V AC adjustable by AC voltage selector

SAFETY-RELATED COMPONENT WARNING!!

COMPONENTS IDENTIFIED BY MARK ⚠ OR DOTTED LINE WITH MARK ⚠ ON THE SCHEMATIC DIAGRAMS AND IN THE PARTS LIST ARE CRITICAL TO SAFE OPERATION. REPLACE THESE COMPONENTS WITH SONY PARTS WHOSE PART NUMBERS APPEAR AS SHOWN IN THIS MANUAL OR IN SUPPLEMENTS PUBLISHED BY SONY.

On removing the case

Remove the case by lifting it up straightly above. Unbalanced lifting damages gaps of the front panel assembly for supporitng the case.

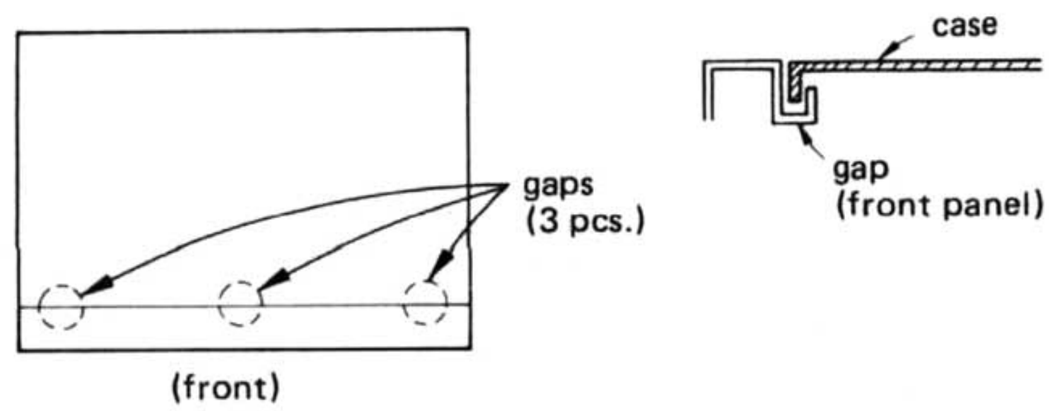

Parts Identification

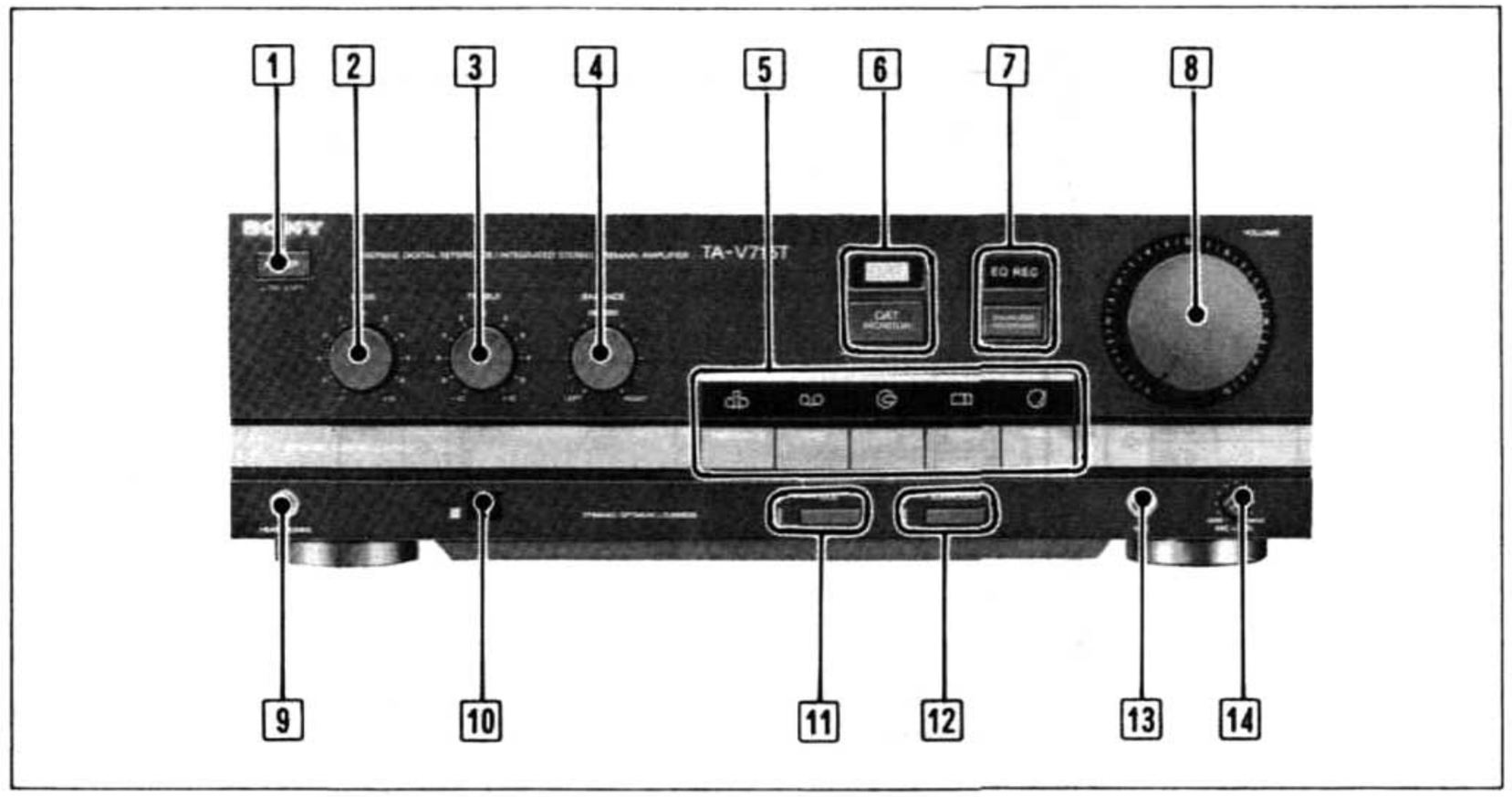

1 **POWER switch**

2 **BASS control**

3 **TREBLE control**

4 **BALANCE control**

5 **Function buttons and indicators**
- VIDEO/AUX
- TAPE
- CD (compact disc)
- TUNER
- PHONO

6 **DAT (Digital Audio Tape) MONITOR switch and indicator**

7 **EQUALIZER RECORDING switch and indicator**

8 **VOLUME control**

9 **HEADPHONES jack**

10 **Remote sensor**

11 **DOL (Dynamic Optimum Loudness) switch and indicator**

12 **SURROUND switch and indicator**

13 **MIC (microphone) input jack**

14 **MIC (microphone) LEVEL control**

RM-S715 Remote Commander

This remote commander is designed exclusively for Sony audio components.
The buttons with functions that are the same as those of the equivalent buttons on the Sony audio component can be used to control the components.

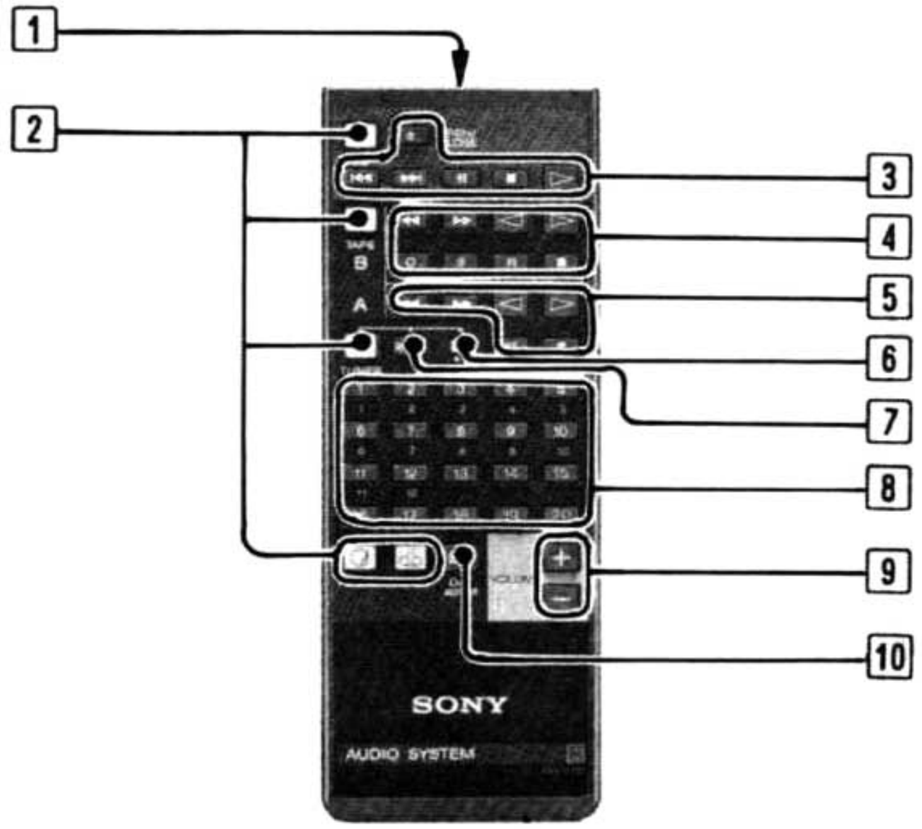

1 **Infrared ray transmitter**

2 **Function buttons**
- CD
- TAPE
- TUNER
- PHONO
- VIDEO

3 **Operation buttons for CD player**
- ⏏ (eject)
- ⏮/⏭ (AMS*) *AMS = Automatic Music Sensor
- ❚❚ (pause)
- ■ (stop)
- ▶ (play)

4 **Operation buttons for cassette deck B**
- ◀◀/▶▶ (fast winding)
- ◀ (reverse play)
- ▶ (forward play)
- O (record muting)
- ● (record)
- ❚❚ (pause)
- ■ (stop)

5 **Operation buttons for cassette deck A**
- ◀◀/▶▶ (fast winding)
- ◀ (reverse play)
- ▶ (forward play)
- ❚❚ (pause)
- ■ (stop)

6 **TUNER/CD selector**

7 **BAND selector**

8 **Numeric buttons**
Operate according to the setting of the TUNER/CD selector.

TUNER/CD selector	Numeric buttons
TUENR	1 - 12 buttons operate to call the preset stations
CD	1 - 20 buttons operate for direct selection on the connected CD player

9 **VOLUME controls**

10 **DAT (Digital Audio Tape) MONITOR switch**
Operate the same operation as that on the TA-V715T.

Notes on the remote commander
- Keep the commander away from extremely hot or humid place.
- To avoid malfunction, do not simultaneously depress two or more buttons.
- Press the DAT MONITOR switch to play the program source connected to DAT IN jacks.
  To play the program source connected to jacks other than DAT IN, be sure to turn off the lamp on the DAT MONITOR switch by pressing the DAT MONITOR switch again.

Connecting the System

Notes on Connection

- Connect the AC power cord last. Make sure power is off.
- Cord plugs and jacks are color coded. Red plugs and jacks are for right channel (R) and white ones for left channel (L).
- Fully insert cable connectors into jacks. Loose connections may cause hum or noise.

Overall Connection Diagram

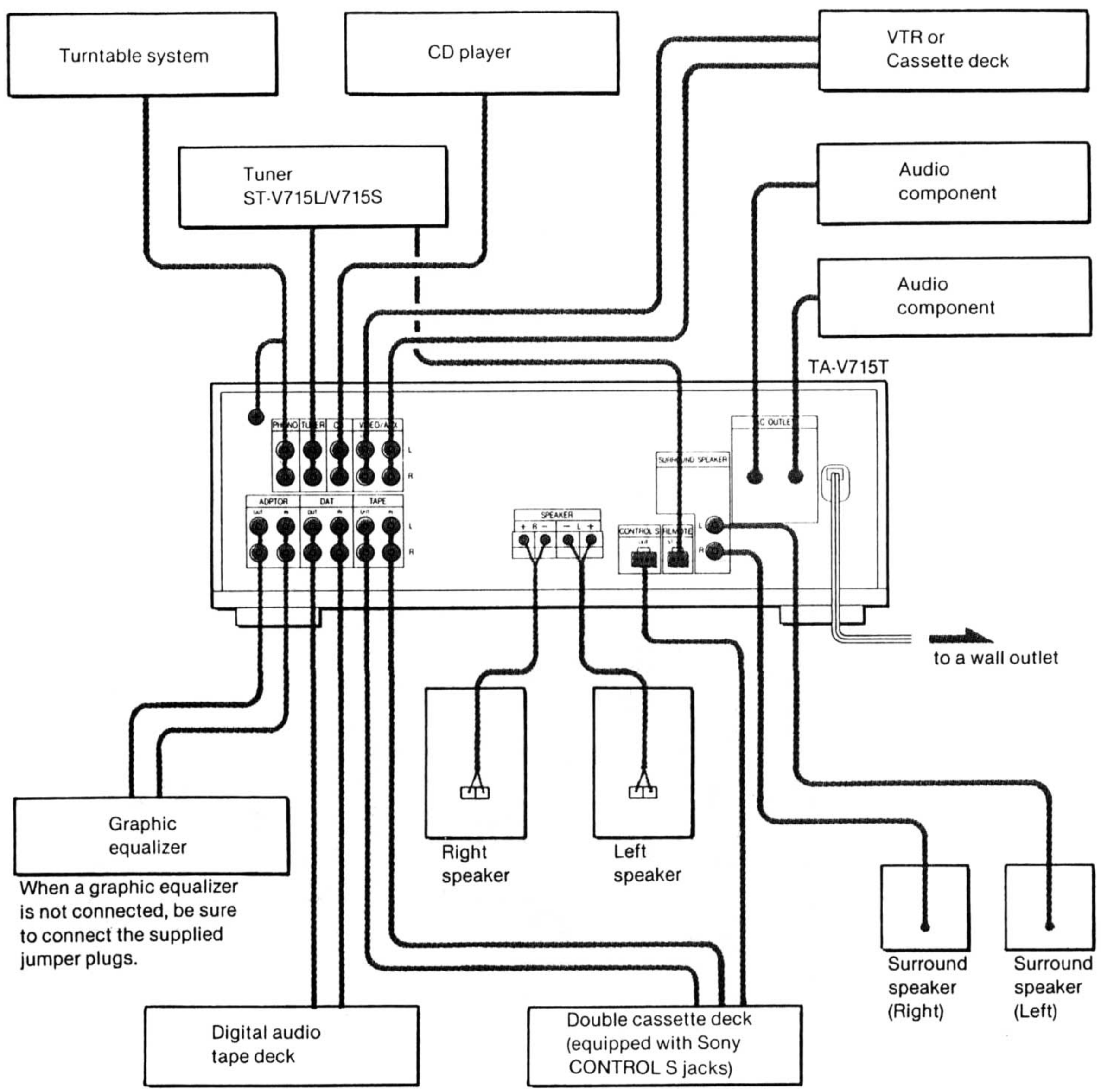

● Semiconductor Lead Layouts

GP1U52

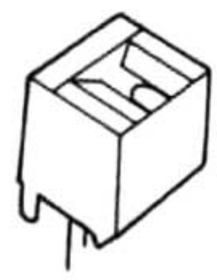

μPC1237HA

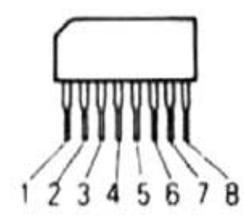

2SK246BL

LA6458D

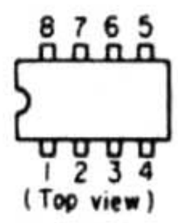

2SA1317-SU

GMA01

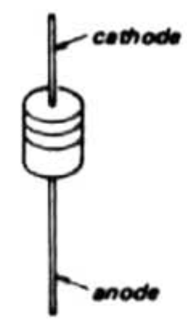

LC4066BH

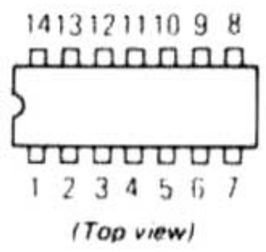

2SA1346
2SC3330-S
2SC3400
2SC3402

HZ5C1
HZ6B2L
10E2N

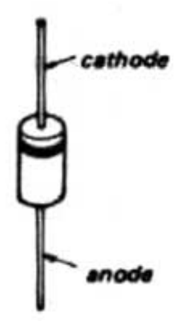

LC6527CK-3467

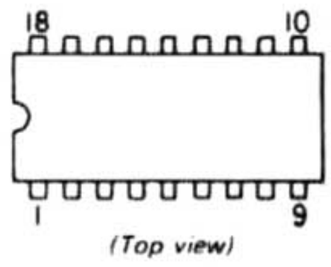

2SB1013
2SC1841
2SD1387

RBV-602-01

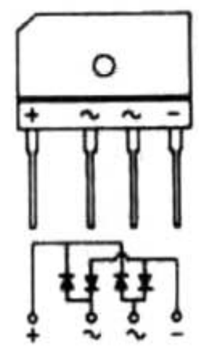

LC7818

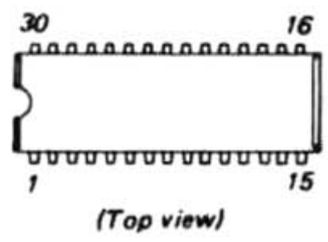

2SB1133S

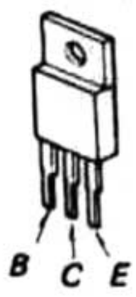

M5F7810

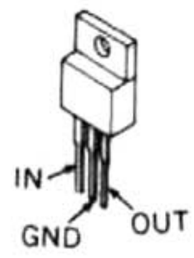

SLP338FK-51B
SLP938C-51AB

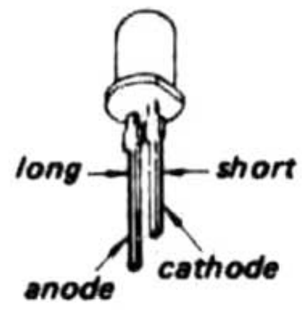

M5F7910

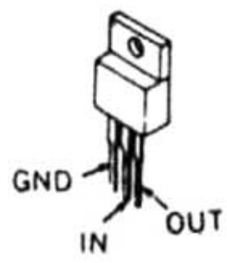

2SC3622A-L

SLP3070K
SLP4076

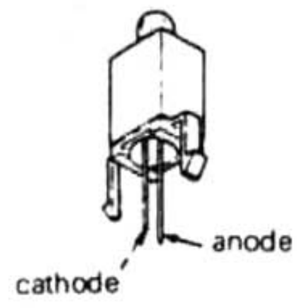

STK4152II
STK4192II

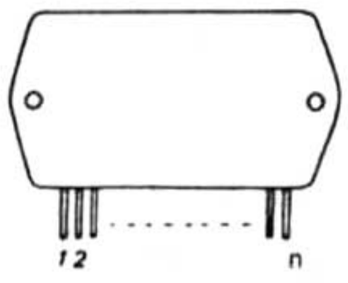

2-1. PRINTED WIRING BOARDS

- **See page 5 for Semiconductor Lead Layouts.**

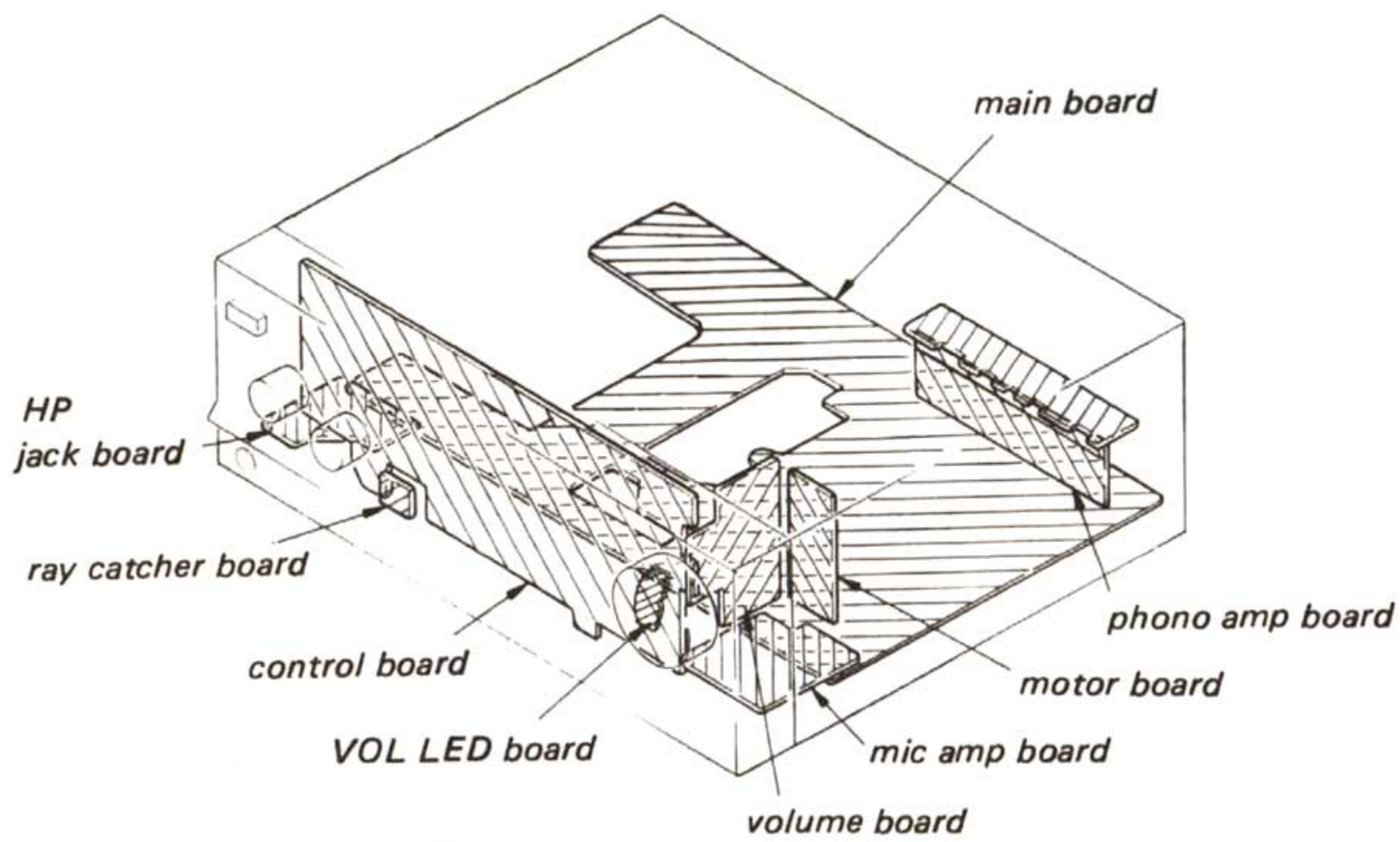

- **Semiconductor Location**

Ref. No.	Location	Ref. No.	Location
D301	E-18	IC101	D-9
D302	E-18	IC201	D-13
D303	G-17	IC301	D-17
D304	H-10	IC302	E-16
D305	H-9	IC303	B-19
D306	H-8	IC401	H-16
D307	H-7	IC402	I-16
D308	H-6	IC403	I-2
D309	H-10	IC501	G-22
D310	H-9	IC701	G-18
D311	H-8	IC702	C-20
D312	H-7	IC703	F-3
D313	H-6	IC801	J-17
D314	I-9	IC802	J-18
D318	H-10		
D319	H-9	Q301	F-17
D320	H-8	Q302	F-17
D321	H-7	Q304	F-16
D322	H-6	Q305	C-19
D323	J-8	Q306	D-19
D324	J-8	Q307	I-9
D325	J-8	Q308	I-9
D326	J-10	Q309	G-17
D327	J-10	Q401	J-16
D401	J-18	Q402	J-16
D402	J-18	Q403	I-5
D403	G-8	Q451	J-17
D404	G-7	Q452	J-17
D405	F-9	Q453	I-5
D451	J-18	Q701	H-18
D452	J-18	Q702	H-18
D701	H-18	Q703	H-18
D703	E-21	Q704	H-18
D704	C-20	Q705	H-4
D705	D-20	Q706	B-20
D706	C-20	Q707	B-21
D707	B-20	Q708	H-18
D709	H-25	Q709	H-18
D753	E-21	Q710	H-18
D801	J-26	Q711	F-21
D805	J-25	Q712	C-20
D806	J-25	Q761	E-21
D807	I-25		
D808	I-25		
D819	J-19		

Note:

- Color code or sleeving over the end of the jacket.

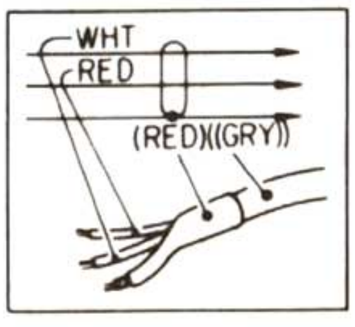

- ○—— : parts extracted from the component side.
- ●—— : parts extracted from the conductor side.

2-1. PRINTED WIRING BOARDS

- See page 5 for Semiconductor Lead Layouts.

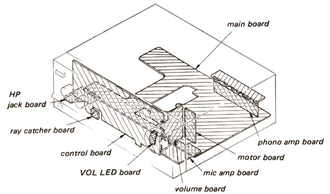

- Semiconductor Location

Ref. No.	Location	Ref. No.	Location
D301	E-18	IC101	D-9
D302	E-18	IC201	D-13
D303	G-17	IC301	D-17
D304	H-10	IC302	E-16
D305	H-9	IC303	B-19
D306	H-8	IC401	H-16
D307	H-7	IC402	I-16
D308	H-6	IC403	I-2
D309	H-10	IC501	G-22
D310	H-9	IC701	G-18
D311	H-8	IC702	C-20
D312	H-7	IC703	F-3
D313	H-6	IC801	J-17
D314	I-9	IC802	J-18
D318	H-10		
D319	H-9	Q301	F-17
D320	H-8	Q302	F-17
D321	H-7	Q304	F-16
D322	H-6	Q305	C-19
D323	J-8	Q306	D-19
D324	J-8	Q307	I-9
D325	J-8	Q308	I-9
D326	J-10	Q309	G-17
D327	J-10	Q401	J-16
D401	J-18	Q402	J-16
D402	J-18	Q403	I-5
D403	G-8	Q451	J-17
D404	G-7	Q452	J-17
D405	F-9	Q453	I-5
D451	J-18	Q701	H-18
D452	J-18	Q702	H-18
D701	H-18	Q703	H-18
D703	E-21	Q704	H-18
D704	C-20	Q705	H-4
D705	D-20	Q706	B-20
D706	C-20	Q707	B-21
D707	B-20	Q708	H-18
D709	H-25	Q709	H-18
D753	E-21	Q710	H-18
D801	J-26	Q711	F-21
D805	J-25	Q712	C-20
D806	J-25	Q761	E-21
D807	I-25		
D808	I-25		
D819	J-19		

Note:

- Color code or sleeving over the end of the jacket.

- ◆—◇— : parts extracted from the component side.
- ◆—◆— : parts extracted from the conductor side.

SECTION 2
DIAGRAMS

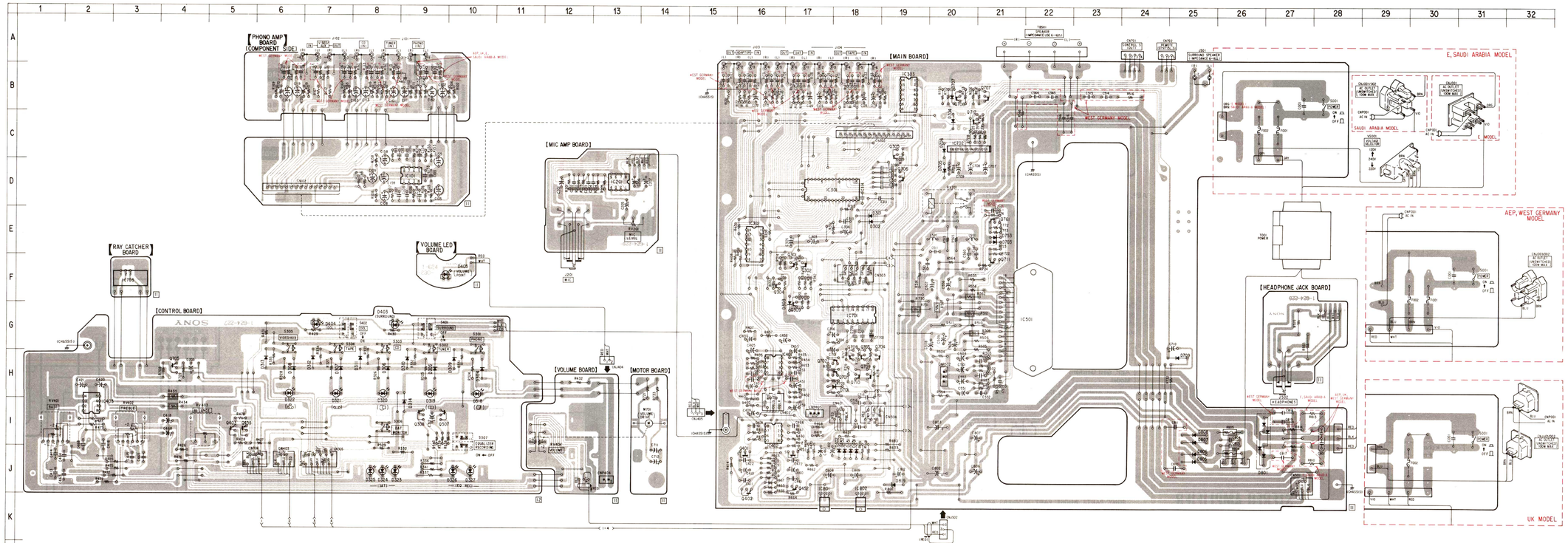

2-2. SCHEMATIC DIAGRAM

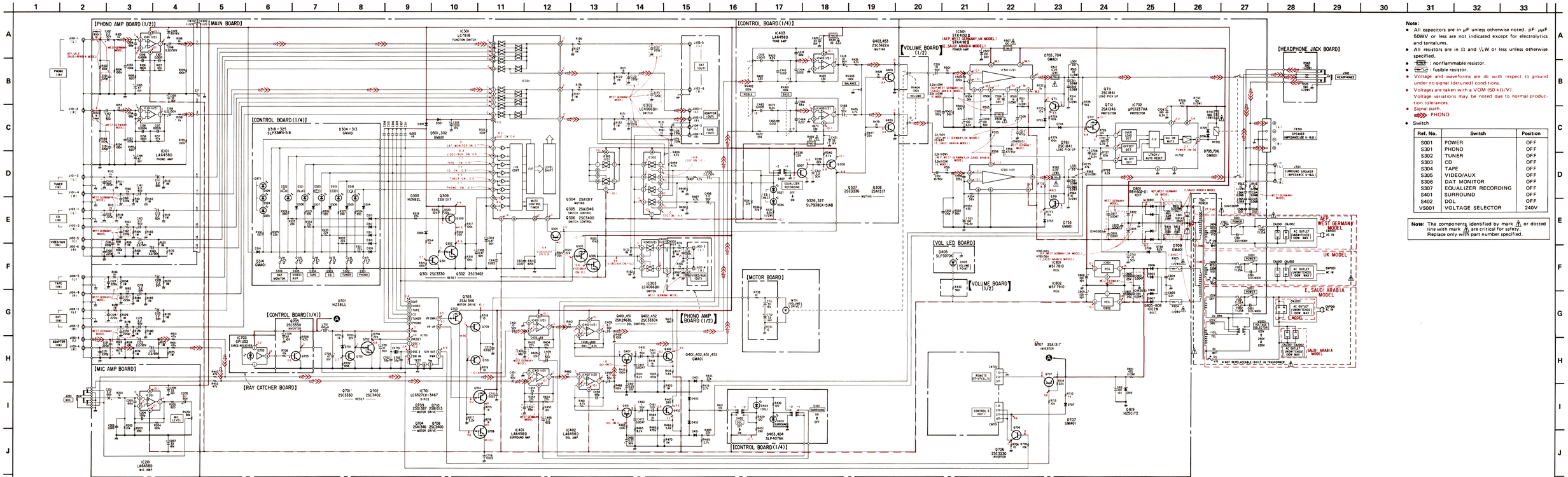

Note:

- All capacitors are in μF unless otherwise noted. pF: μμF 50WV or less are not indicated except for electrolytics and tantalums.
- All resistors are in Ω and ¼W or less unless otherwise specified.
- ⚠ : nonflammable resistor.
- ⚠ : fusible resistor.
- Voltage and waveforms are dc with respect to ground under no-signal (detuned) conditions.
- Voltages are taken with a VOM (50 kΩ/V). Voltage variations may be noted due to normal production tolerances.
- Signal path. ⟹ PHONO
- Switch

Ref. No.	Switch	Position
S001	POWER	OFF
S301	PHONO	OFF
S302	TUNER	OFF
S303	CD	OFF
S304	TAPE	OFF
S305	VIDEO/AUX	OFF
S306	DAT MONITOR	OFF
S307	EQUALIZER RECORDING	OFF
S401	SURROUND	OFF
S402	DOL	OFF
VS001	VOLTAGE SELECTOR	240V

Note: The components identified by mark ⚠ or dotted line with mark ⚠ are critical for safety. Replace only with part number specified.

SECTION 3
EXPLODED VIEWS

NOTE:

- The mechanical parts with no reference number in the exploded views are not supplied.
- The construction parts of an assembled part are indicated with a collation number in the remark column.
- Items marked "★" are not stocked since they are seldom required for routine service. Some delay should be anticipated when ordering these items.
- Due to standardization, parts with part number suffix -XX and -X may be different from the parts specified in the components used on the set.
- Color Indication of Appearance Parts
  Example:
  (RED) . . . KNOB, BALANCE (WHITE)
  ↑ Cabinet's Color ↑ Parts Color

The components identified by mark ⚠ or dotted line with mark ⚠ are critical for safety.
Replace only with part number specified.

(1)

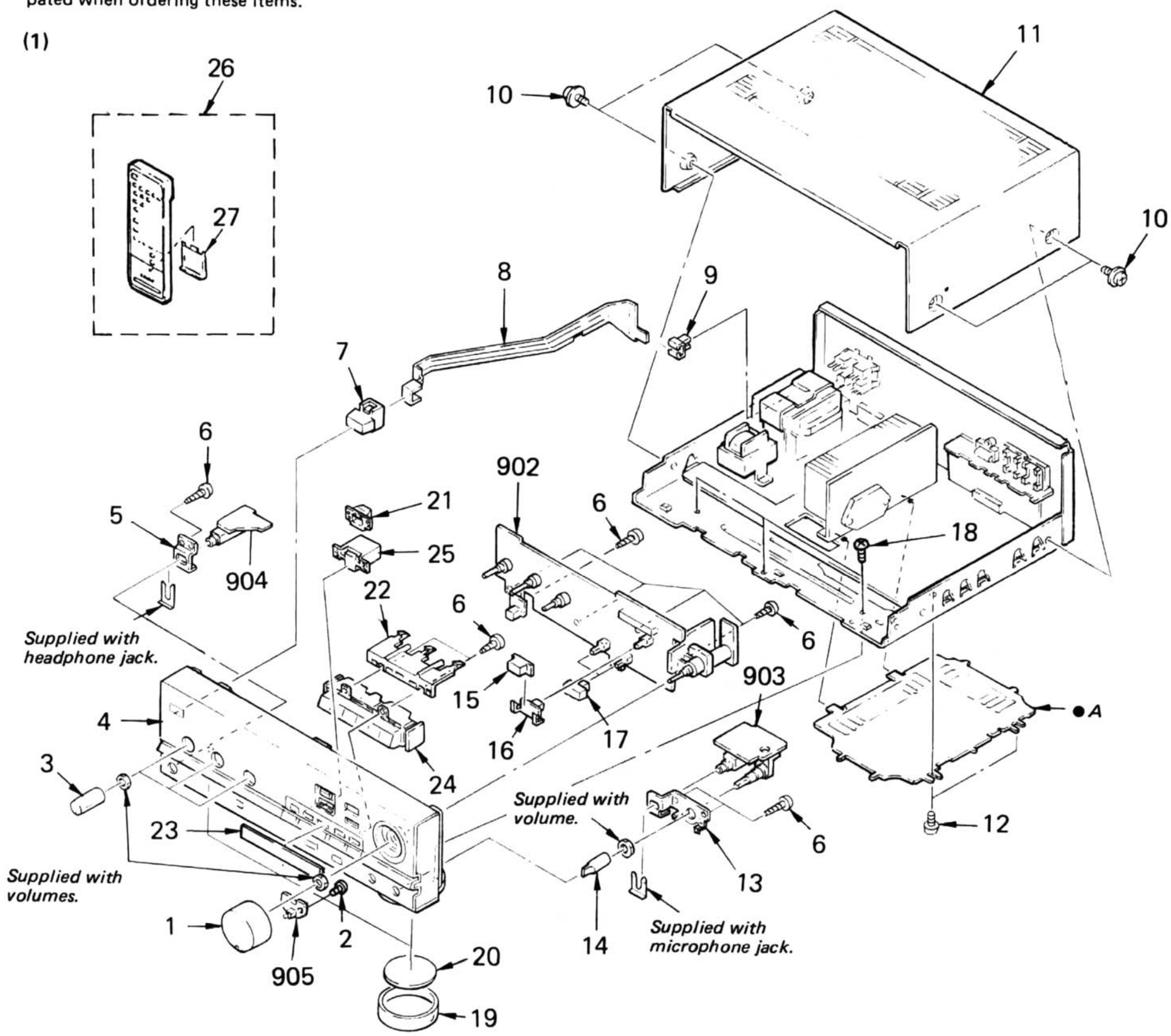

No.	Part No.	Description	Remarks
1	4-921-926-01	KNOB (V)	
2	7-685-533-11	SCREW +BTP 2.6X6 TYPE2 N-S	
3	4-916-746-01	KNOB (DIA.21)	
4	X-4917-243-1	PANEL ASSY, FRONT	
5	*4-921-909-01	BRACKET (J)	
6	7-685-134-19	SCREW +BTP 2.6X8 TYPE2 N-S	
7	4-921-919-01	BUTTON (POWER)	
8	*4-921-925-01	JOINT	
9	4-866-342-00	JOINT (B), KNOB	
10	3-704-366-01	SCREW (CASE) (M3X8)	
11	4-919-378-31	CASE	
12	7-682-548-04	SCREW +BVTT 3X8 (S)	
13	*4-921-907-01	BRACKET (M)	
14	4-921-921-01	KNOB (MIC LEVEL)	
15	4-921-914-01	BUTTON (EQUALIZER RECORDING)	

No.	Part No.	Description	Remarks
16	*4-921-911-01	JOINT	
17	4-921-920-01	BUTTON (DOL/SURROUND)	
18	7-685-646-79	SCREW +BVTP 3X8 TYPE2 N-S	
19	4-921-918-01	PLATE, ORNAMENTAL	
20	4-921-906-01	FELT	
21	*4-921-908-01	HOLDER, LED	
22	*4-921-923-01	HOLDER (FUNCTION), LED	
23	*4-921-928-01	INDICATOR (FUNCTION)	
24	4-921-927-01	BUTTON (FUNCTION)	
25	4-921-915-01	BUTTON (DAT MONITOR)	
26	1-465-037-11	REMOTE COMMANDER (RM-S715)	27
27	2-394-123-01	COVER, BATTERY (FOR RM-S715)	
902	*A-4375-340-A	MOUNTED PCB, CONTROL	
903	*1-624-228-11	PC BOARD, MICROPHONE AMPLIFIER	
904	*1-624-229-11	PC BOARD, HEADPHONE	
905	*1-624-230-11	PC BOARD, VOL LED	

(2)

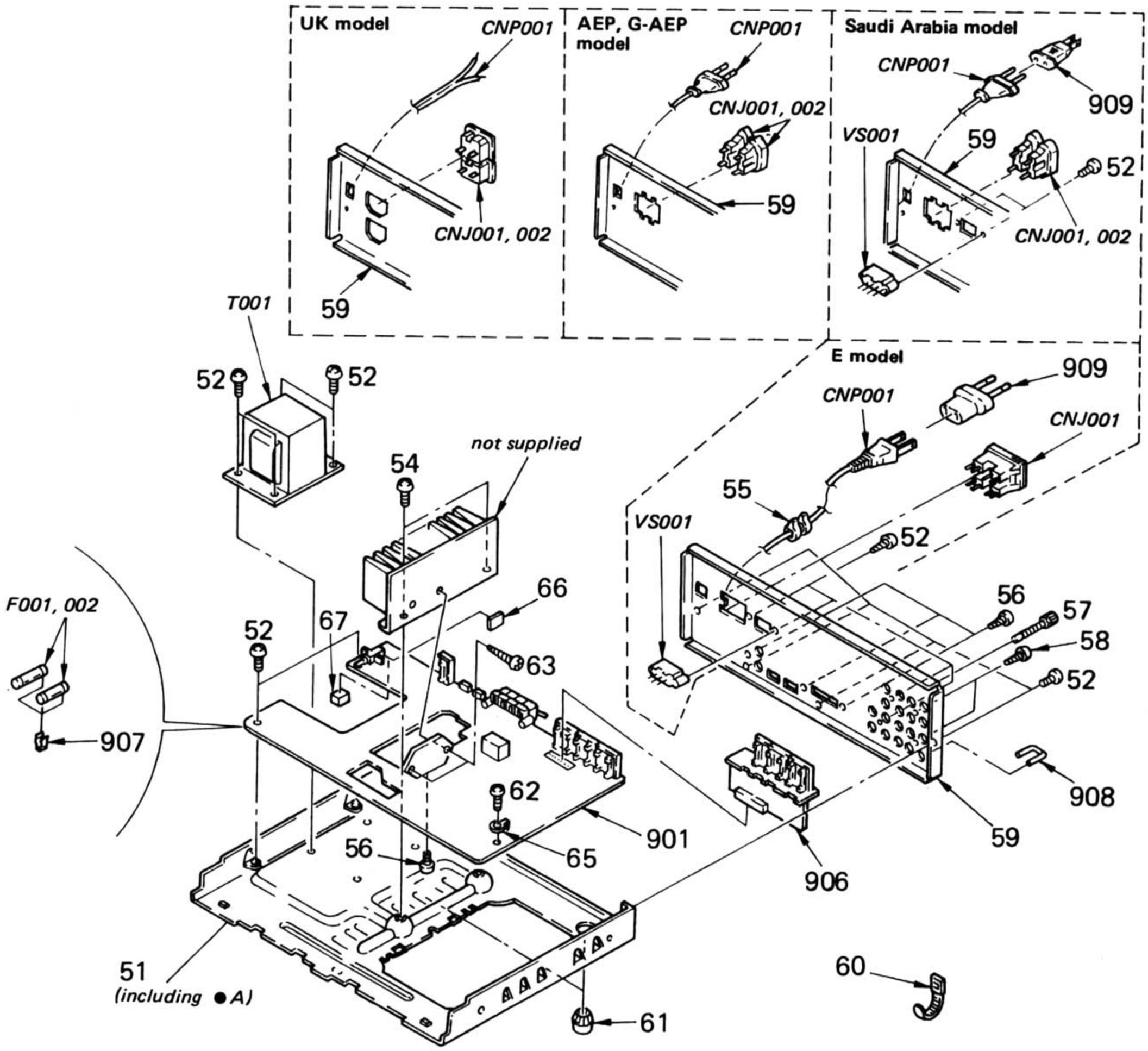

No.	Part No.	Description	Remarks
51	*X-4917-246-1	CHASSIS ASSY	
52	7-682-548-04	SCREW +BVTT 3X8 (S)	
54	7-682-549-04	SCREW +BVTT 3X10 (S)	
55	*3-703-244-00	(AEP,West Germany,UK,Saudi Arabia) .....BUSHING (2104), CORD	
	3-703-571-00	(E).....BUSHING (S) (4516), CORD	
56	7-685-646-79	SCREW +BVTP 3X8 TYPE2 N-S	
57	*3-706-165-00	SCREW	
58	7-621-849-00	SCREW, TAPPING	
59	*4-925-112-01	(AEP).....PANEL, BACK	
	*4-925-112-11	(West Germany).....PANEL, BACK	
	*4-925-112-21	(UK).....PANEL, BACK	
	*4-925-112-41	(E,Saudi Arabia)...PANEL, BACK	
60	3-701-748-00	CLAMP	
61	X-4921-901-1	FOOT ASSY	
62	3-703-685-21	SCREW (+BV 3X8)	
63	7-685-650-79	SCREW +BVTP 3X16 TYPE2 IT-3	
65	4-870-539-00	PLATE, GROUND	
66	9-911-843-XX	SPACER, PC BOARD	
67	4-911-357-01	INSULATOR	
901	*A-4388-772-A	(AEP).....MOUNTED PCB, MAIN	
	*A-4388-773-A	(West Germany).....MOUNTED PCB, MAIN	
	*A-4388-774-A	(UK).....MOUNTED PCB, MAIN	
	*A-4388-775-A	(E,Saudi Arabia)...MOUNTED PCB, MAIN	

Note: The components identified by mark ⚠ or dotted line with mark ⚠ are critical for safety. Replace only with part number specified.

No.	Part No.	Description	Remarks
906	*1-627-324-11	PC BOARD, PHONO AMPLIFIER	
907	1-533-183-11	HOLDER, FUSE	
908	1-535-706-11	PLUG, JUMPER	
909	⚠.1-506-409-11	(Saudi Arabia)...ADAPTOR, CONVERSION	
	⚠.1-526-565-00	(E).....AC PLUG ADAPTOR	
	⚠CNJ001.1-526-751-00	(UK).....OUTLET, AC	
	⚠CNJ001.1-526-752-00	(E).....OUTLET, AC (2 GANG)	
	⚠CNJ001.1-526-794-11	(AEP,West Germany,Saudi Arabia) .....OUTLET, AC	
	⚠CNJ002.1-526-751-00	(UK).....OUTLET, AC	
	⚠CNJ002.1-526-794-11	(AEP,West Germany,Saudi Arabia) .....OUTLET, AC	
	⚠CNP001.1-551-188-XX	(E).....CORD, POWER	
	⚠CNP001.1-555-750-00	(AEP,West Germany,Saudi Arabia) ...CORD, POWER	
	⚠CNP001.1-556-035-00	(UK).....CORD, POWER	
F001	⚠.1-532-285-00	(AEP,West Germany,E,Saudi Arabia) ...FUSE, TIME-LAG T1.25A	
F002	⚠.1-532-285-00	FUSE, TIME-LAG T1.25A	
T001	⚠.1-449-362-11	(AEP,West Germany,UK)..TRANSFORMER, POWER	
T001	⚠.1-449-363-11	(E,Saudi Arabia).....TRANSFORMER, POWER	
VS001	⚠.1-570-307-11	(E)...SWITCH, VOLTAGE CHANGE	

SECTION 4
ELECTRICAL PARTS LIST

NOTE:

- Due to standardization, replacements in the parts list may be different from the parts specified in the diagrams or the components used on the set.
- Items marked "★" are not stocked since they are seldom required for routine service. Some delay should be anticipated when ordering these items.
- If there are two or more same circuits in a set such as a stereophonic machine, only typical circuit parts may be indicated and capacitors and resistors in other same circuits may be omitted.

CAPACITORS:
MF: μF, PF: μμF.

RESISTORS
- All resistors are in ohms.
- F: nonflammable

COILS
- MMH: mH, UH: μH

SEMICONDUCTORS
In each case, U: μ, for example:
UA...: μA..., UPA...: μPA...,
UPC...: μPC, UPD...: μPD...

The components identified by mark ⚠ or dotted line with mark ⚠ are critical for safety.
Replace only with part number specified.

Ref.No.	Part No.	Description
901	*A-4388-772-A	(AEP).....MOUNTED PCB, MAIN
	*A-4388-773-A	(West Germany).....MOUNTED PCB, MAIN
	*A-4388-774-A	(UK).....MOUNTED PCB, MAIN
	*A-4388-775-A	(E,Saudi Arabia)...MOUNTED PCB, MAIN
902	*A-4375-340-A	MOUNTED PCB, CONTROL
903	*1-624-228-11	PC BOARD, MICROPHONE AMPLIFIER
904	*1-624-229-11	PC BOARD, HEADPHONE
905	*1-624-230-11	PC BOARD, VOL LED
906	*1-627-324-11	PC BOARD, PHONO AMPLIFIER
907	1-533-183-11	HOLDER, FUSE
908	1-535-706-11	PLUG, JUMPER
909	⚠.1-506-409-11	(Saudi Arabia)...ADAPTOR, CONVERSION
	⚠.1-526-565-00	(E).....AC PLUG ADAPTOR
C001	1-161-744-00	CERAMIC 0.01MF 400V
C101	1-162-286-31	(West Germany)...CERAMIC 220PF 10% 50V
C102	1-124-257-00	ELECT 2.2MF 20% 50V
C103	1-162-282-31	CERAMIC 100PF 10% 50V
C104	1-162-219-31	CERAMIC 68PF 5% 50V
C105	1-124-446-11	ELECT 47MF 20% 10V
C106	1-130-480-00	MYLAR 0.0056MF 5% 50V
C107	1-130-473-00	MYLAR 0.0015MF 5% 50V
C108	1-124-464-11	ELECT 0.22MF 20% 50V
C109	1-124-963-11	ELECT 33MF 20% 16V
C110	1-162-286-31	(West Germany)...CERAMIC 220PF 10% 50V
C111	1-124-257-00	ELECT 2.2MF 20% 50V
C112	1-162-286-31	(West Germany)...CERAMIC 220PF 10% 50V
C113	1-124-257-00	ELECT 2.2MF 20% 50V
C116	1-162-286-31	(West Germany)...CERAMIC 220PF 10% 50V
C118	1-162-286-31	(West Germany)...CERAMIC 220PF 10% 50V
C119	1-124-257-00	ELECT 2.2MF 20% 50V
C120	1-162-286-31	(West Germany)...CERAMIC 220PF 10% 50V
C121	1-162-286-31	(West Germany)...CERAMIC 220PF 10% 50V
C122	1-124-257-00	ELECT 2.2MF 20% 50V
C123	1-162-286-31	(West Germany)...CERAMIC 220PF 10% 50V
C124	1-162-286-31	(West Germany)...CERAMIC 220PF 10% 50V
C125	1-124-257-00	ELECT 2.2MF 20% 50V
C126	1-162-286-31	(West Germany)...CERAMIC 220PF 10% 50V
C127	1-162-286-31	(West Germany)...CERAMIC 220PF 10% 50V
C128	1-124-257-00	ELECT 2.2MF 20% 50V
C151	1-162-286-31	(West Germany)...CERAMIC 220PF 10% 50V
C152	1-124-257-00	ELECT 2.2MF 20% 50V
C153	1-162-282-31	CERAMIC 100PF 10% 50V
C154	1-162-219-31	CERAMIC 68PF 5% 50V
C155	1-124-446-11	ELECT 47MF 20% 10V
C156	1-130-480-00	MYLAR 0.0056MF 5% 50V
C157	1-130-473-00	MYLAR 0.0015MF 5% 50V
C158	1-124-464-11	ELECT 0.22MF 20% 50V
C159	1-124-963-11	ELECT 33MF 20% 16V
C160	1-162-286-31	(West Germany)...CERAMIC 220PF 10% 50V
C161	1-124-257-00	ELECT 2.2MF 20% 50V
C162	1-162-286-31	(West Germany)...CERAMIC 220PF 10% 50V
C163	1-124-257-00	ELECT 2.2MF 20% 50V
C167	1-162-286-31	(West Germany)...CERAMIC 220PF 10% 50V
C168	1-162-286-31	(West Germany)...CERAMIC 220PF 10% 50V
C169	1-124-257-00	ELECT 2.2MF 20% 50V
C170	1-162-286-31	(West Germany)...CERAMIC 220PF 10% 50V
C171	1-162-286-31	(West Germany)...CERAMIC 220PF 10% 50V
C172	1-124-257-00	ELECT 2.2MF 20% 50V
C173	1-162-286-31	(West Germany)...CERAMIC 220PF 10% 50V
C174	1-162-286-31	(West Germany)...CERAMIC 220PF 10% 50V
C175	1-124-257-00	ELECT 2.2MF 20% 50V
C176	1-162-286-31	(West Germany)...CERAMIC 220PF 10% 50V
C177	1-162-286-31	(West Germany)...CERAMIC 220PF 10% 50V
C178	1-124-257-00	ELECT 2.2MF 20% 50V
C201	1-124-925-11	ELECT 2.2MF 20% 50V
C202	1-162-294-31	CERAMIC 0.001MF 10% 50V
C203	1-162-219-31	CERAMIC 68PF 5% 50V
C204	1-162-284-31	CERAMIC 150PF 10% 50V
C205	1-124-463-00	ELECT 0.1MF 20% 50V
C206	1-124-963-11	ELECT 33MF 20% 16V
C207	1-124-963-11	ELECT 33MF 20% 16V
C303	1-124-893-11	ELECT 2200MF 20% 10V
C304	1-124-902-00	ELECT 0.47MF 20% 50V
C305	1-124-902-00	ELECT 0.47MF 20% 50V
C306	1-161-494-00	CERAMIC 0.022MF 25V
C307	1-161-494-00	CERAMIC 0.022MF 25V
C308	1-161-494-00	CERAMIC 0.022MF 25V
C309	1-161-494-00	CERAMIC 0.022MF 25V
C310	1-161-494-00	CERAMIC 0.022MF 25V
C311	1-161-494-00	CERAMIC 0.022MF 25V
C312	1-124-257-00	ELECT 2.2MF 20% 50V
C313	1-161-494-00	CERAMIC 0.022MF 25V
C314	1-161-494-00	CERAMIC 0.022MF 25V
C401	1-123-875-11	ELECT 10MF 20% 50V
C402	1-102-888-00	(West Germany)...CERAMIC 68PF 5% 50V
C403	1-102-943-00	CERAMIC 6PF 0.5PF 50V
C405	1-124-257-00	ELECT 2.2MF 20% 50V
C406	1-124-257-00	ELECT 2.2MF 20% 50V
C408	1-101-888-00	CERAMIC 68PF 5% 50V
C409	1-124-927-11	ELECT 4.7MF 20% 50V
C410	1-124-499-11	ELECT 1MF 20% 50V

Ref.No.	Part No.	Description			
C411	1-136-153-00	FILM	0.01MF	5%	50V
C412	1-124-464-11	ELECT	0.22MF	20%	50V
C413	1-136-154-00	FILM	0.012MF	5%	50V
C414	1-136-154-00	FILM	0.012MF	5%	50V
C415	1-130-473-00	MYLAR	0.0015MF	5%	50V
C416	1-101-888-00	CERAMIC	68PF	5%	50V
C418	1-123-875-11	ELECT	10MF	20%	50V
C420	1-124-963-11	ELECT	33MF	20%	16V
C421	1-124-963-11	ELECT	33MF	20%	16V
C422	1-130-479-00	MYLAR	0.0047MF	5%	50V
C451	1-123-875-11	ELECT	10MF	20%	50V
C452	1-102-888-00	(West Germany)...CERAMIC	68PF	5%	50V
C453	1-102-943-00	CERAMIC	6PF	0.5PF	50V
C455	1-124-257-00	ELECT	2.2MF	20%	50V
C456	1-124-257-00	ELECT	2.2MF	20%	50V
C458	1-101-888-00	CERAMIC	68PF	5%	50V
C459	1-124-927-11	ELECT	4.7MF	20%	50V
C460	1-124-499-11	ELECT	1MF	20%	50V
C461	1-136-153-00	FILM	0.01MF	5%	50V
C462	1-124-464-11	ELECT	0.22MF	20%	50V
C463	1-136-154-00	FILM	0.012MF	5%	50V
C464	1-136-154-00	FILM	0.012MF	5%	50V
C465	1-130-473-00	MYLAR	0.0015MF	5%	50V
C466	1-101-888-00	CERAMIC	68PF	5%	50V
C468	1-123-875-11	ELECT	10MF	20%	50V
C472	1-130-479-00	MYLAR	0.0047MF	5%	50V
C501	1-123-875-11	ELECT	10MF	20%	50V
C502	1-102-973-00	CERAMIC	100PF	5%	50V
C503	1-124-443-00	ELECT	100MF	20%	6.3V
C504	1-102-978-00	CERAMIC	220PF	5%	50V
C506	1-124-910-11	ELECT	47MF	20%	35V
C507	1-124-122-11	ELECT	100MF	20%	50V
C508	1-124-122-11	ELECT	100MF	20%	50V
C509	1-124-908-11	(AEP,West Germany,UK) ...ELECT	22MF	20%	50V
C509	1-124-915-11	(E,Saudi Arabia) ...ELECT	10MF	20%	63V
C510	1-136-163-00	FILM	0.068MF	5%	50V
C511	1-136-163-00	FILM	0.068MF	5%	50V
C514	1-136-163-00	(West Germany)...FILM	0.068MF	5%	50V
C515	1-136-163-00	(West Germany)...FILM	0.068MF	5%	50V
C516	1-161-379-00	(West Germany)...CERAMIC	0.01MF	30%	25V
C517	1-162-290-31	(West Germany)...CERAMIC	470PF	10%	50V
C551	1-123-875-11	ELECT	10MF	20%	50V
C552	1-102-973-00	CERAMIC	100PF	5%	50V
C553	1-124-443-00	ELECT	100MF	20%	6.3V
C554	1-102-978-00	CERAMIC	220PF	5%	50V
C556	1-124-910-11	ELECT	47MF	20%	35V
C560	1-136-163-00	FILM	0.068MF	5%	50V
C561	1-136-163-00	FILM	0.068MF	5%	50V
C564	1-136-163-00	(West Germany)...FILM	0.068MF	5%	50V
C565	1-136-163-00	(West Germany)...FILM	0.068MF	5%	50V
C566	1-161-379-00	(West Germany)...CERAMIC	0.01MF	30%	25V
C701	1-123-875-11	ELECT	10MF	20%	50V
C702	1-102-963-00	CERAMIC	33PF	5%	50V
C703	1-102-963-00	CERAMIC	33PF	5%	50V
C705	1-124-446-11	ELECT	47MF	20%	10V
C706	1-124-446-11	ELECT	47MF	20%	10V

Note: The components identified by mark ⚠ or dotted line with mark ⚠ are critical for safety.
Replace only with part number specified.

Ref.No.	Part No.	Description			
C707	1-126-176-11	ELECT	220MF	20%	6.3V
C708	1-126-176-11	ELECT	220MF	20%	6.3V
C709	1-124-443-00	ELECT	100MF	20%	6.3V
C710	1-123-875-11	ELECT	10MF	20%	50V
C711	1-124-963-11	ELECT	33MF	20%	16V
C712	1-124-963-11	ELECT	33MF	20%	16V
C715	1-161-494-00	CERAMIC	0.022MF		25V
C716	1-161-494-00	CERAMIC	0.022MF		25V
C717	1-161-494-00	CERAMIC	0.022MF		25V
C801	1-102-355-00	CERAMIC	0.01MF		250V
C802	1-126-224-11	(AEP,West Germany,UK) ....ELECT	4700MF	20%	42V
C802	1-126-258-11	(E,Saudi Arabia)..ELECT	4700MF	20%	56V
C803	1-126-224-11	(AEP,West Germany,UK) ....ELECT	4700MF	20%	42V
C803	1-126-258-11	(E,Saudi Arabia)..ELECT	4700MF	20%	56V
C804	1-161-379-00	CERAMIC	0.01MF	30%	25V
C805	1-161-379-00	CERAMIC	0.01MF	30%	25V
C806	1-124-557-11	ELECT	1000MF	20%	25V
C807	1-124-557-11	ELECT	1000MF	20%	25V
C808	1-126-101-11	ELECT	100MF	20%	16V
C809	1-126-101-11	ELECT	100MF	20%	16V
C810	1-161-377-00	(West Germany)..CERAMIC	0.0047MF	30%	50V
C811	1-161-377-00	(West Germany)..CERAMIC	0.0047MF	30%	50V
C812	1-126-101-11	ELECT	100MF	20%	16V
C817	1-161-377-00	(West Germany)..CERAMIC	0.0047MF	30%	50V
C818	1-161-377-00	(West Germany)..CERAMIC	0.0047MF	30%	50V
C819	1-161-377-00	(West Germany)..CERAMIC	0.0047MF	30%	50V
CF701	1-567-738-11	VIBRATOR, CERAMIC			
CN102	*1-563-858-11	CONNECTOR, BOARD TO BOARD 15P			
CN201	*1-562-250-00	SOCKET, CONNECTOR 5P			
CN302	*1-566-383-11	CONNECTOR, BOARD TO BOARD 15P			
CN303	*1-566-904-11	HOUSING, CONNECTOR 10P			
CN304	*1-566-825-11	HOUSING, CONNECTOR 6P			
CN305	*1-566-904-11	HOUSING, CONNECTOR 10P			
CN306	*1-566-825-11	HOUSING, CONNECTOR 6P			
CN401	*1-566-167-11	HOUSING, CONNECTOR 5P			
CN402	*1-566-167-11	HOUSING, CONNECTOR 5P			
CN403	*1-566-167-11	HOUSING, CONNECTOR 5P			
CN404	*1-564-505-11	PLUG, CONNECTOR 2P			
CN405	*1-564-705-11	PIN, CONNECTOR (SMALL TYPE) 3P			
CN501	*1-566-167-11	HOUSING, CONNECTOR 5P			
CN502	*1-562-250-00	SOCKET, CONNECTOR 5P			
CN502	*1-564-506-11	PLUG, CONNECTOR 3P			
CN701	1-564-980-11	PIN, CONNECTOR 4P (CONTROL S OUT)			
CN702	1-564-358-00	PIN, CONNECTOR 3P (REMOTE)			
⚠CNJ001	1-526-751-00	(UK).....OUTLET, AC			
⚠CNJ001	1-526-752-00	(E).....OUTLET, AC (2 GANG)			
⚠CNJ001	1-526-794-11	(AEP,West Germany,Saudi Arabia) ...OUTLET, AC			
⚠CNJ002	1-526-751-00	(UK).....OUTLET, AC			
⚠CNJ002	1-526-794-11	(AEP,West Germany,Saudi Arabia) ...OUTLET, AC			
⚠CNP001	1-551-188-XX	(E).....CORD, POWER			
⚠CNP001	1-555-750-00	(AEP,West Germany,Saudi Arabia) ...CORD, POWER			
⚠CNP001	1-556-035-00	(UK).....CORD, POWER			
D301	1-806-937-11	DIODE GMA01			
D302	1-806-937-11	DIODE GMA01			
D303	8-719-910-65	DIODE HZ6B2L			

Ref.No.	Part No.	Description
D304	1-806-937-11	DIODE GMA01
D305	1-806-937-11	DIODE GMA01
D306	1-806-937-11	DIODE GMA01
D307	1-806-937-11	DIODE GMA01
D308	1-806-937-11	DIODE GMA01
D309	1-806-937-11	DIODE GMA01
D310	1-806-937-11	DIODE GMA01
D311	1-806-937-11	DIODE GMA01
D312	1-806-937-11	DIODE GMA01
D313	1-806-937-11	DIODE GMA01
D314	1-806-937-11	DIODE GMA01
D318	8-719-969-97	DIODE SLP-338FK-51B
D319	8-719-969-97	DIODE SLP-338FK-51B
D320	8-719-969-97	DIODE SLP-338FK-51B
D321	8-719-969-97	DIODE SLP-338FK-51B
D322	8-719-969-97	DIODE SLP-338FK-51B
D323	8-719-969-97	DIODE SLP-338FK-51B
D324	8-719-969-97	DIODE SLP-338FK-51B
D325	8-719-969-97	DIODE SLP-338FK-51B
D326	8-719-969-87	DIODE SLP-938C-51AB
D327	8-719-969-87	DIODE SLP-938C-51AB
D401	1-806-937-11	DIODE GMA01
D402	1-806-937-11	DIODE GMA01
D403	8-719-969-96	DIODE SLP4076
D404	8-719-969-96	DIODE SLP4076
D405	8-719-969-90	DIODE SLP3070K
D451	1-806-937-11	DIODE GMA01
D452	1-806-937-11	DIODE GMA01
D701	8-719-942-32	DIODE HZ3BLL
D703	1-806-937-11	DIODE GMA01
D704	1-806-937-11	DIODE GMA01
D705	1-806-937-11	DIODE GMA01
D706	1-806-937-11	DIODE GMA01
D707	1-806-937-11	DIODE GMA01
D709	1-806-937-11	DIODE GMA01
D753	1-806-937-11	DIODE GMA01
D801	8-719-302-38	DIODE RBV-602-01
D805	8-719-200-77	DIODE 10E2N
D806	8-719-200-77	DIODE 10E2N
D807	8-719-200-77	DIODE 10E2N
D808	8-719-200-77	DIODE 10E2N
D819	8-719-911-50	DIODE HZ5C1
F001 ⚠	1-532-285-00	(AEP,West Germany,E,Saudi Arabia) ...FUSE, TIME-LAG T1.25A
F002 ⚠	1-532-285-00	FUSE, TIME-LAG T1.25A
IC101	8-759-820-38	IC LA6458D
IC201	8-759-820-38	IC LA6458D
IC301	8-759-820-52	IC LC7818
IC302	8-759-800-37	IC LC4066BH
IC303	8-759-800-37	IC LC4066BH
IC401	8-759-820-38	IC LA6458D
IC402	8-759-820-38	IC LA6458D
IC403	8-759-820-38	IC LA6458D
IC501	8-749-900-78	(E,Saudi Arabia).....IC STK4192II
IC501	8-749-941-52	(AEP,West Germany,UK)...IC STK4152II
IC701	8-759-800-07	IC LC6527CK-3467
IC702	8-759-111-68	IC UPC1237HA
IC703	8-749-920-03	IC GP1U52

Ref.No.	Part No.	Description
IC801	8-759-604-32	IC M5F7810
IC802	8-759-604-50	IC M5F7910
J101	1-565-258-11	JACK, PIN 4P (PHONO,TUNER)
J102	1-565-320-11	JACK, PIN 6P (CD,VIDEO/AUX)
J103	1-565-320-11	JACK, PIN 6P (ADAPTOR,DAT OUT)
J104	1-565-320-11	JACK, PIN 6P (DAT IN,TAPE)
J201	1-507-658-00	JACK (MIC)
J501	1-565-352-21	JACK, PIN 2P (SURROUND SPEAKER)
J502	1-507-825-00	JACK, LARGE TYPE (HEADPHONES)
L501	*1-420-872-00	COIL, AIR CORE
L551	*1-420-872-00	COIL, AIR CORE
L701	1-410-334-11	INDUCTOR 100UH
Q301	8-729-820-23	TRANSISTOR 2SC3330-S
Q302	8-729-806-28	TRANSISTOR 2SC3402
Q304	8-729-820-10	TRANSISTOR 2SA1317-SU
Q305	8-729-806-16	TRANSISTOR 2SA1346
Q306	8-729-806-34	TRANSISTOR 2SC3400
Q307	8-729-820-23	TRANSISTOR 2SC3330-S
Q308	8-729-820-10	TRANSISTOR 2SA1317-SU
Q309	8-729-820-10	TRANSISTOR 2SA1317-SU
Q401	8-729-224-63	TRANSISTOR 2SK246BL
Q402	8-729-820-23	TRANSISTOR 2SC3330K-S
Q403	8-729-107-91	TRANSISTOR 2SC3622A
Q451	8-729-224-63	TRANSISTOR 2SK246BL
Q452	8-729-820-23	TRANSISTOR 2SC3330-S
Q453	8-729-107-91	TRANSISTOR 2SC3622A
Q701	8-729-820-23	TRANSISTOR 2SC3330-S
Q702	8-729-806-28	TRANSISTOR 2SC3402
Q703	8-729-806-16	TRANSISTOR 2SA1346
Q704	8-729-806-16	TRANSISTOR 2SA1346
Q705	8-729-820-23	TRANSISTOR 2SC3330-S
Q706	8-729-820-23	TRANSISTOR 2SC3330-S
Q707	8-729-820-10	TRANSISTOR 2SA1317-SU
Q708	8-729-806-34	TRANSISTOR 2SC3400
Q709	8-729-801-93	TRANSISTOR 2SD1387
Q710	8-729-801-83	TRANSISTOR 2SB1013
Q711	8-729-108-06	TRANSISTOR 2SC1841
Q712	8-729-806-16	TRANSISTOR 2SA1346
Q761	8-729-108-06	TRANSISTOR 2SC1841
R101	1-249-417-11	(West Germany)...CARBON 1K 5% 1/4W
R102	1-249-441-11	CARBON 100K 5% 1/4W
R103	1-249-417-11	CARBON 1K 5% 1/4W
R104	1-249-441-11	CARBON 100K 5% 1/4W
R105	1-249-416-11	CARBON 820 5% 1/4W
R106	1-247-897-11	CARBON 560K 5% 1/4W
R107	1-249-437-11	CARBON 47K 5% 1/4W
R108	1-249-417-11	CARBON 1K 5% 1/4W
R109	1-249-441-11	CARBON 100K 5% 1/4W
R110	1-249-417-11	CARBON 1K 5% 1/4W
R111	1-247-903-00	CARBON 1M 5% 1/4W
R112	1-247-903-00	CARBON 1M 5% 1/4W
R113	1-249-417-11	CARBON 1K 5% 1/4W
R114	1-247-903-00	CARBON 1M 5% 1/4W
R115	1-247-903-00	CARBON 1M 5% 1/4W
R116	1-249-417-11	CARBON 1K 5% 1/4W
R117	1-247-903-00	CARBON 1M 5% 1/4W
R118	1-249-417-11	CARBON 1K 5% 1/4W

Note: The components identified by mark ⚠ or dotted line with mark ⚠ are critical for safety. Replace only with part number specified.

Ref.No.	Part No.	Description			
R119	1-247-903-00	CARBON	1M	5%	1/4W
R120	1-247-903-00	CARBON	1M	5%	1/4W
R121	1-249-417-11	CARBON	1K	5%	1/4W
R122	1-247-903-00	CARBON	1M	5%	1/4W
R123	1-249-417-11	CARBON	1K	5%	1/4W
R124	1-247-903-00	CARBON	1M	5%	1/4W
R125	1-247-903-00	CARBON	1M	5%	1/4W
R126	1-249-417-11	CARBON	1K	5%	1/4W
R127	1-247-903-00	CARBON	1M	5%	1/4W
R128	1-249-417-11	CARBON	1K	5%	1/4W
R129	1-247-903-00	CARBON	1M	5%	1/4W
R130	1-247-903-00	CARBON	1M	5%	1/4W
R131	1-249-417-11	CARBON	1K	5%	1/4W
R132	1-247-903-00	CARBON	1M	5%	1/4W
R133	1-249-417-11	CARBON	1K	5%	1/4W
R134	1-247-903-00	CARBON	1M	5%	1/4W
R135	1-247-903-00	CARBON	1M	5%	1/4W
R151	1-249-417-11	(West Germany)...CARBON	1K	5%	1/4W
R152	1-249-441-11	CARBON	100K	5%	1/4W
R153	1-249-417-11	CARBON	1K	5%	1/4W
R154	1-249-441-11	CARBON	100K	5%	1/4W
R155	1-249-416-11	CARBON	820	5%	1/4W
R156	1-247-897-11	CARBON	560K	5%	1/4W
R157	1-249-437-11	CARBON	47K	5%	1/4W
R158	1-249-417-11	CARBON	1K	5%	1/4W
R159	1-249-441-11	CARBON	100K	5%	1/4W
R160	1-249-417-11	CARBON	1K	5%	1/4W
R161	1-247-903-00	CARBON	1M	5%	1/4W
R162	1-247-903-00	CARBON	1M	5%	1/4W
R163	1-249-417-11	CARBON	1K	5%	1/4W
R164	1-247-903-00	CARBON	1M	5%	1/4W
R165	1-247-903-00	CARBON	1M	5%	1/4W
R166	1-249-417-11	CARBON	1K	5%	1/4W
R167	1-247-903-00	CARBON	1M	5%	1/4W
R168	1-249-417-11	CARBON	1K	5%	1/4W
R169	1-247-903-00	CARBON	1M	5%	1/4W
R170	1-247-903-00	CARBON	1M	5%	1/4W
R171	1-249-417-11	CARBON	1K	5%	1/4W
R172	1-247-903-00	CARBON	1M	5%	1/4W
R173	1-249-417-11	CARBON	1K	5%	1/4W
R174	1-247-903-00	CARBON	1M	5%	1/4W
R175	1-247-903-00	CARBON	1M	5%	1/4W
R176	1-249-417-11	CARBON	1K	5%	1/4W
R177	1-247-903-00	CARBON	1M	5%	1/4W
R178	1-249-417-11	CARBON	1K	5%	1/4W
R179	1-247-903-00	CARBON	1M	5%	1/4W
R180	1-247-903-00	CARBON	1M	5%	1/4W
R181	1-249-417-11	CARBON	1K	5%	1/4W
R182	1-247-903-00	CARBON	1M	5%	1/4W
R183	1-249-417-11	CARBON	1K	5%	1/4W
R184	1-247-903-00	CARBON	1M	5%	1/4W
R185	1-247-903-00	CARBON	1M	5%	1/4W
R201	1-249-417-11	CARBON	1K	5%	1/4W
R202	1-249-429-11	CARBON	10K	5%	1/4W
R203	1-249-412-11	CARBON	390	5%	1/4W
R204	1-249-441-11	CARBON	100K	5%	1/4W
R205	1-249-416-11	CARBON	820	5%	1/4W

Ref.No.	Part No.	Description			
R312	1-249-441-11	CARBON	100K	5%	1/4W
R313	1-247-901-11	CARBON	820K	5%	1/4W
R314	1-249-417-11	CARBON	1K	5%	1/4W
R315	1-249-441-11	CARBON	100K	5%	1/4W
R316	1-249-433-11	CARBON	22K	5%	1/4W
R317	1-249-441-11	CARBON	100K	5%	1/4W
R318	1-249-441-11	CARBON	100K	5%	1/4W
R319	1-249-433-11	CARBON	22K	5%	1/4W
R320	1-249-433-11	CARBON	22K	5%	1/4W
R321	1-249-433-11	CARBON	22K	5%	1/4W
R322	1-249-433-11	CARBON	22K	5%	1/4W
R323	1-249-429-11	CARBON	10K	5%	1/4W
R324	1-247-707-11	CARBON	390	5%	1/4W
R325	1-247-707-11	CARBON	390	5%	1/4W
R326	1-247-707-11	CARBON	390	5%	1/4W
R327	1-247-707-11	CARBON	390	5%	1/4W
R328	1-247-707-11	CARBON	390	5%	1/4W
R329	1-249-433-11	CARBON	22K	5%	1/4W
R330	1-247-700-11	CARBON	100	5%	1/4W
R331	1-249-433-11	CARBON	22K	5%	1/4W
R332	1-249-433-11	CARBON	22K	5%	1/4W
R333	1-249-433-11	CARBON	22K	5%	1/4W
R334	1-249-433-11	CARBON	22K	5%	1/4W
R335	1-249-433-11	CARBON	22K	5%	1/4W
R336	1-249-433-11	CARBON	22K	5%	1/4W
R337	1-247-751-11	CARBON	820	5%	1/2W
R338	1-249-433-11	CARBON	22K	5%	1/4W
R339	1-249-433-11	CARBON	22K	5%	1/4W
R340	1-249-425-11	CARBON	4.7K	5%	1/4W
R341	1-249-433-11	CARBON	22K	5%	1/4W
R342	1-249-409-11	CARBON	220	5%	1/4W
R401	1-249-437-11	CARBON	47K	5%	1/4W
R402	1-249-437-11	CARBON	47K	5%	1/4W
R403	1-249-434-11	CARBON	27K	5%	1/4W
R404	1-249-434-11	CARBON	27K	5%	1/4W
R405	1-249-430-11	CARBON	12K	5%	1/4W
R407	1-249-425-11	CARBON	4.7K	5%	1/4W
R408	1-247-903-00	CARBON	1M	5%	1/4W
R409	1-249-425-11	CARBON	4.7K	5%	1/4W
R410	1-249-417-11	CARBON	1K	5%	1/4W
R411	1-249-425-11	CARBON	4.7K	5%	1/4W
R412	1-249-441-11	CARBON	100K	5%	1/4W
R413	1-249-428-11	CARBON	8.2K	5%	1/4W
R414	1-249-417-11	CARBON	1K	5%	1/4W
R415	1-247-895-00	CARBON	470K	5%	1/4W
R416	1-249-426-11	CARBON	5.6K	5%	1/4W
R417	1-249-412-11	CARBON	390	5%	1/4W
R418	1-249-441-11	CARBON	100K	5%	1/4W
R419	1-249-422-11	CARBON	2.7K	5%	1/4W
R420	1-247-903-00	CARBON	1M	5%	1/4W
R421	1-249-429-11	CARBON	10K	5%	1/4W
R422	1-249-435-11	CARBON	33K	5%	1/4W
R423	1-249-435-11	CARBON	33K	5%	1/4W
R425	1-249-428-11	CARBON	8.2K	5%	1/4W
R426	1-249-425-11	CARBON	4.7K	5%	1/4W
R427	1-249-433-11	CARBON	22K	5%	1/4W
R428	1-249-417-11	CARBON	1K	5%	1/4W
R429	1-249-406-11	CARBON	120	5%	1/4W

Ref.No.	Part No.	Description				
R430	1-249-406-11	CARBON	120	5%	1/4W	
R431	1-247-707-11	CARBON	390	5%	1/4W	
R432	1-247-710-11	CARBON	560	5%	1/4W	
R433	1-249-433-11	CARBON	22K	5%	1/4W	
R434 ⚠	1-247-692-11	CARBON	22	5%	1/4W	F
R435 ⚠	1-247-692-11	CARBON	22	5%	1/4W	F
R451	1-249-437-11	CARBON	47K	5%	1/4W	
R452	1-249-437-11	CARBON	47K	5%	1/4W	
R453	1-249-434-11	CARBON	27K	5%	1/4W	
R454	1-249-434-11	CARBON	27K	5%	1/4W	
R455	1-249-430-11	CARBON	12K	5%	1/4W	
R457	1-249-425-11	CARBON	4.7K	5%	1/4W	
R458	1-247-903-00	CARBON	1M	5%	1/4W	
R459	1-249-425-11	CARBON	4.7K	5%	1/4W	
R460	1-249-417-11	CARBON	1K	5%	1/4W	
R461	1-249-425-11	CARBON	4.7K	5%	1/4W	
R462	1-249-441-11	CARBON	100K	5%	1/4W	
R463	1-249-428-11	CARBON	8.2K	5%	1/4W	
R464	1-249-417-11	CARBON	1K	5%	1/4W	
R465	1-247-895-00	CARBON	470K	5%	1/4W	
R466	1-249-426-11	CARBON	5.6K	5%	1/4W	
R467	1-249-412-11	CARBON	390	5%	1/4W	
R468	1-249-441-11	CARBON	100K	5%	1/4W	
R469	1-249-422-11	CARBON	2.7K	5%	1/4W	
R470	1-247-903-00	CARBON	1M	5%	1/4W	
R472	1-249-435-11	CARBON	33K	5%	1/4W	
R473	1-249-435-11	CARBON	33K	5%	1/4W	
R475	1-249-428-11	CARBON	8.2K	5%	1/4W	
R476	1-249-425-11	CARBON	4.7K	5%	1/4W	
R478	1-249-417-11	CARBON	1K	5%	1/4W	
R483	1-249-433-11	CARBON	22K	5%	1/4W	
R501	1-249-417-11	CARBON	1K	5%	1/4W	
R502	1-249-438-11	CARBON	56K	5%	1/4W	
R503	1-249-413-11	CARBON	470	5%	1/4W	
R504	1-249-438-11	CARBON	56K	5%	1/4W	
R505	1-247-756-11	(AEP,UK,West Germany,Saudi Arabia)	CARBON	2.2K	5%	1/2W
R505	1-247-758-11	(E)	CARBON	3.3K	5%	1/2W
R506	1-247-756-11	(AEP,UK,West Germany,Saudi Arabia)	CARBON	2.2K	5%	1/2W
R506	1-247-758-11	(E)	CARBON	3.3K	5%	1/2W
R507 ⚠	1-212-881-11	FUSIBLE	100	5%	1/4W	F
R508 ⚠	1-212-881-11	FUSIBLE	100	5%	1/4W	F
R510	1-247-752-11	CARBON	1K	5%	1/2W	
R511	1-247-752-11	CARBON	1K	5%	1/2W	
R512	1-217-156-00	RES, METAL PLATE 0.22				
R514	1-247-727-11	CARBON	10	5%	1/2W	
R515	1-247-727-11	(MAIN BOARD)	CARBON	10	5%	1/2W
R515	1-247-746-11	(HEADPHONE JACK BOARD)	CARBON	390	5%	1/2W

Ref.No.	Part No.	Description				
R516	1-247-727-11	(West Germany)	CARBON	10	5%	1/2W
R551	1-249-417-11	CARBON	1K	5%	1/4W	
R552	1-249-438-11	CARBON	56K	5%	1/4W	
R553	1-249-413-11	CARBON	470	5%	1/4W	
R554	1-249-438-11	CARBON	56K	5%	1/4W	
R555	1-247-756-11	(AEP,UK,West Germany,Saudi Arabia)	CARBON	2.2K	5%	1/2W
R555	1-247-758-11	(E)	CARBON	3.3K	5%	1/2W
R556	1-247-756-11	(AEP,UK,West Germany,Saudi Arabia)	CARBON	2.2K	5%	1/2W
R556	1-247-758-11	(E)	CARBON	3.3K	5%	1/2W
R562	1-217-156-00	RES, METAL PLATE 0.22				
R564	1-247-727-11	CARBON	10	5%	1/2W	
R565	1-247-727-11	(MAIN BOARD)	CARBON	10	5%	1/2W
R565	1-247-746-11	(HEADPHONE JACK BOARD)	CARBON	390	5%	1/2W
R566	1-247-727-11	(West Germany)	CARBON	10	5%	1/2W
R701	1-249-417-11	CARBON	1K	5%	1/4W	
R702	1-249-441-11	CARBON	100K	5%	1/4W	
R703	1-249-433-11	CARBON	22K	5%	1/4W	
R704	1-249-433-11	CARBON	22K	5%	1/4W	
R705	1-249-429-11	CARBON	10K	5%	1/4W	
R706	1-249-393-11	CARBON	10	5%	1/4W	
R708	1-249-429-11	CARBON	10K	5%	1/4W	
R709	1-249-425-11	CARBON	4.7K	5%	1/4W	
R710	1-249-417-11	CARBON	1K	5%	1/4W	
R713	1-249-429-11	CARBON	10K	5%	1/4W	
R714	1-249-433-11	CARBON	22K	5%	1/4W	
R715	1-249-417-11	CARBON	1K	5%	1/4W	
R716	1-249-417-11	CARBON	1K	5%	1/4W	
R717	1-249-421-11	CARBON	2.2K	5%	1/4W	
R718	1-249-393-11	CARBON	10	5%	1/4W	
R719	1-249-393-11	CARBON	10	5%	1/4W	
R721	1-247-688-11	CARBON	10	5%	1/4W	
R722	1-249-417-11	CARBON	1K	5%	1/4W	
R723	1-249-431-11	CARBON	15K	5%	1/4W	
R724	1-249-441-11	CARBON	100K	5%	1/4W	
R725	1-249-438-11	CARBON	56K	5%	1/4W	
R726	1-249-429-11	CARBON	10K	5%	1/4W	
R727	1-249-441-11	CARBON	100K	5%	1/4W	
R728	1-249-428-11	CARBON	8.2K	5%	1/4W	
R729	1-249-437-11	CARBON	47K	5%	1/4W	
R730	1-247-764-11	CARBON	10K	5%	1/2W	
R731 ⚠	1-216-455-11	METAL OXIDE	560	5%	2W	F
R732	1-249-428-11	CARBON	8.2K	5%	1/4W	
R733	1-247-688-11	CARBON	10	5%	1/4W	
R772	1-249-417-11	CARBON	1K	5%	1/4W	
R773	1-249-431-11	CARBON	15K	5%	1/4W	
R774	1-249-441-11	CARBON	100K	5%	1/4W	
R775	1-249-437-11	CARBON	47K	5%	1/4W	

Note: The components identified by mark ⚠ or dotted line with mark ⚠ are critical for safety.
Replace only with part number specified.

Ref.No.	Part No.	Description
R801	1-247-747-11	CARBON 470 5% 1/2W
R804 ⚠	1-212-934-00	FUSIBLE 1 5% 1/2W F
R805 ⚠	1-212-934-00	FUSIBLE 1 5% 1/2W F
R810	1-217-156-00	(E,Saudi Arabia)..RES, METAL PLATE 0.22
R811	1-217-156-00	(E,Saudi Arabia)..RES, METAL PLATE 0.22
R813	1-217-156-00	(E,Saudi Arabia)..RES, METAL PLATE 0.22
R814	1-217-156-00	(E,Saudi Arabia)..RES, METAL PLATE 0.22
RV201	1-237-883-11	RES, VAR, CARBON 50K (MIC LEVEL)
RV401	1-237-881-11	RES, VAR, CARBON 100K/100K (BASS)
RV402	1-237-881-11	RES, VAR, CARBON 100K/100K (TREBLE)
RV403	1-237-882-11	RES, VAR, CARBON 100K (BALANCE)
RV404	1-237-884-11	RES, VAR, CARBON 100K/100K (VOLUME)
RY701	1-515-501-00	RELAY
S001 ⚠	1-554-920-11	SWITCH, PUSH (AC POWER)(1 KEY)
S301	1-554-303-21	SWITCH, KEY BOARD (PHONO)
S302	1-554-303-21	SWITCH, KEY BOARD (TUNER)
S303	1-554-303-21	SWITCH, KEY BOARD (CD)
S304	1-554-303-21	SWITCH, KEY BOARD (TAPE)
S305	1-554-303-21	SWITCH, KEY BOARD (VIDEO/AUX)
S306	1-554-303-21	SWITCH, KEY BOARD (DAT MONITOR)
S307	1-571-292-11	SWITCH, PUSH (1 KEY) (EQUALIZER RECORDING)
S401	1-571-292-11	SWITCH, PUSH (1 KEY)(SURROUND)
S402	1-571-292-11	SWITCH, PUSH (1 KEY)(DOL)
T001 ⚠	1-449-362-11	(AEP,West Germany,UK) ....TRANSFORMER, POWER
T001 ⚠	1-449-363-11	(E,Saudi Arabia)...TRANSFORMER, POWER
TB001	*1-535-139-00	(E,Saudi Arabia) ....BASE POST 22MM (10MM PITCH) 2P
TB001	*1-535-141-00	(AEP,West Germany,UK) ....BASE POST 22MM (10MM PITCH) 4P
TB002	*1-535-139-00	(UK,E,Saudi Arabia) ...BASE POST 22MM (10MM PITCH) 2P
TB501	1-536-705-00	TERMINAL BOARD (SPEAKER)
TB801	*1-535-116-00	TERMINAL
TB802	*1-535-116-00	TERMINAL
VS001 ⚠	1-570-307-11	(E,Saudi Arabia)..SWITCH, VOLTAGE CHANGE

ACCESSORY & PACKING MATERIAL

3-786-200-11	(AEP,UK,E,Saudi Arabia)...MANUAL, INSTRUCTION (ENGLISH,FRENCH,SPANISH)
3-786-200-41	(AEP,West Germany)...MANUAL, INSTRUCTION (GERMAN,DUTCH,SWEDISH,ITALIAN)
*4-925-153-01	CUSHION
*4-925-154-01	INDIVIDUAL CARTON

Note: The components identified by mark ⚠ or dotted line with mark ⚠ are critical for safety. Replace only with part number specified.