TAN-8250

USA Model

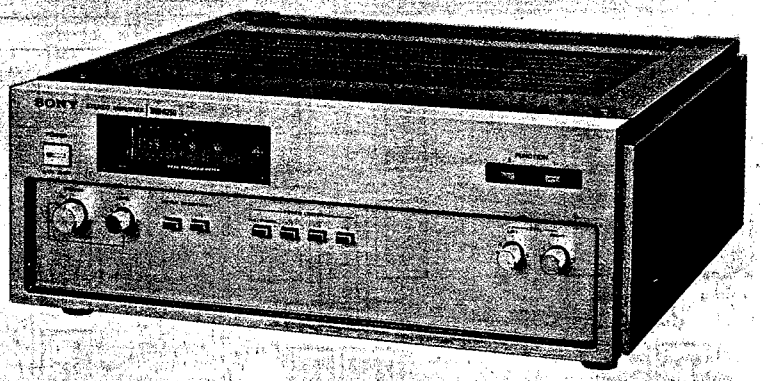

STEREO POWER AMPLIFIER

SPECIFICATIONS

POWER AMP SECTION

Power outputs:

	2 CH	Monaural
Continuous RMS power output: (rated output) (less than 0.2 % THD)	180 W + 180 W/8 Ω 250 W + 250 W/4 Ω at 1 kHz, both channels driven simultaneously	LOW 350 W/4 Ω, 470 W/2 Ω HIGH 380 W/16 Ω, 550 W/8 Ω at 1 kHz
	150 W + 150 W/8 Ω 200 W + 200 W/4 Ω at 20 Hz~20 kHz, both channels driven simultaneously	LOW 300 W/4 Ω, 400 W/2 Ω HIGH 350 W/16 Ω, 500 W/8 Ω at 20 Hz~20 kHz
Dynamic power output: (IHF constant power supply method)	370 W/8 Ω 500 W/4 Ω	LOW 370 W/4 Ω, 500 W/2 Ω HIGH 380 W/16 Ω, 550 W/8 Ω

Power bandwidth: (IHF) 5 Hz~50 kHz with 8 Ω load

Harmonic distortion: 0.1 % at rated output
0.05 % at 1 W output

IM distortion: (60 Hz : 7 kHz = 4:1) 0.1 % at rated output
0.05 % at 1 W output

Frequency response: (at 1 W output) 20 Hz~100 kHz $^{+0}_{-3}$ dB with NORMAL/TEST switch set to NORMAL
DC~100 kHz $^{+0}_{-1}$ dB with NORMAL/TEST switch to TEST

Inputs: Sensitivity: 1.0 V RMS (for rated output)
Impedance: 50 kΩ
(Two pairs of inputs equipped with LEVEL controls)

Outputs: Total impedance should be higher than 4 Ω.
In 2CH mode
minimum speaker impedance is 4 Ω.
In MONO-LOW mode
minimum speaker impedance is 2 Ω.
In MONO-HIGH mode
minimum speaker impedance is 8 Ω.

Residual noise: 1 μW

S/N ratio: 100 dB, weighting network A, short-circuited

Damping factor: 250 (8 Ω, at 1 kHz, at SPEAKER DIRECT terminal)

OPTICAL PEAK PROGRAM METER

Frequency response: 30 Hz~30 kHz $^{+0}_{-3}$ dB

Measuring range: 0~200 W (with METER SENSITIVITY switch set to "x 1/10" ..... 0 W~20 W)

GENERAL

System: Phase-linear dc stereo pure-complementary power amplifier

Power requirements: 120 V ac, 60 Hz

Power consumption: 380 W

AC outlet: 1 unswitched 200 W

Dimensions: 440 (w) x 170 (h) x 410 (d) mm
17 3/8 (w) x 6 3/4 (h) x 16 1/8 (d) inches

Weight: 23.3 kg (51 lb 6 oz), net
28.4 kg (62 lb 10 oz), in shipping carton

SONY®

SERVICE MANUAL

BLOCK DIAGRAM

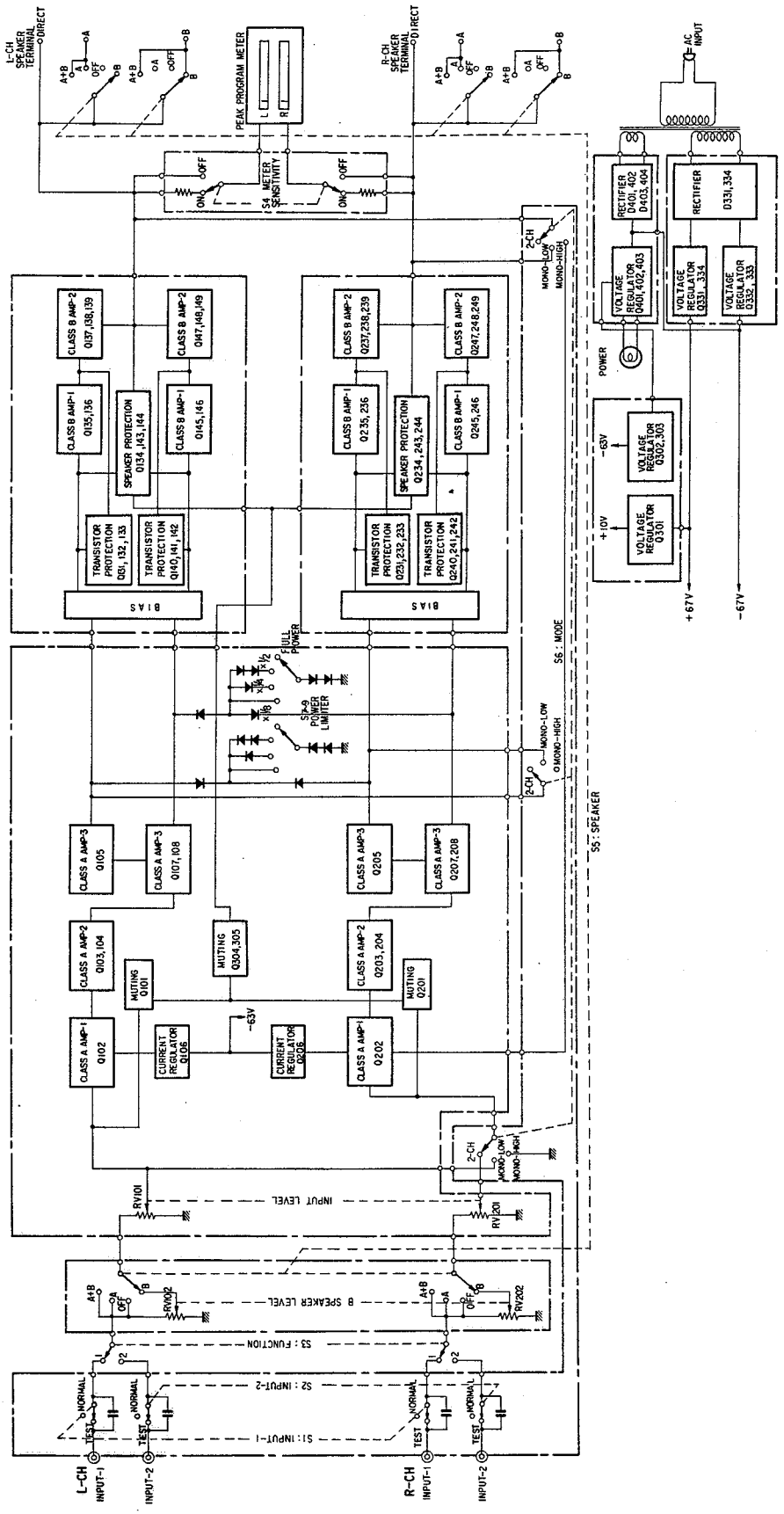

SECTION 1
DISASSEMBLY AND REPLACEMENT

Note: All screws are Phillips type (cross recess type), unless otherwise noted.

1-1. FRONT PANEL REMOVAL

1. Remove the upper panel by taking out the four screws.
2. Remove the screws shown in Fig. 1-1, Fig. 1-2 and Fig. 1-3.

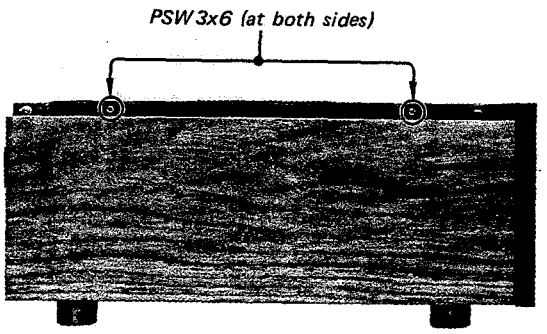

Fig. 1-1. Side panel removal

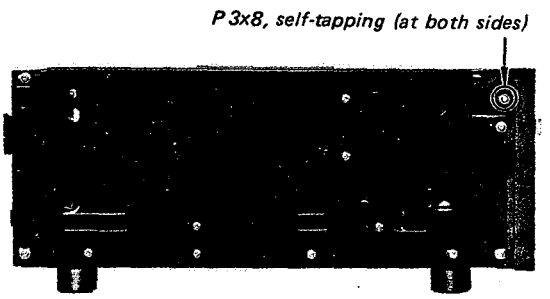

Fig. 1-2. Front panel removal (1)

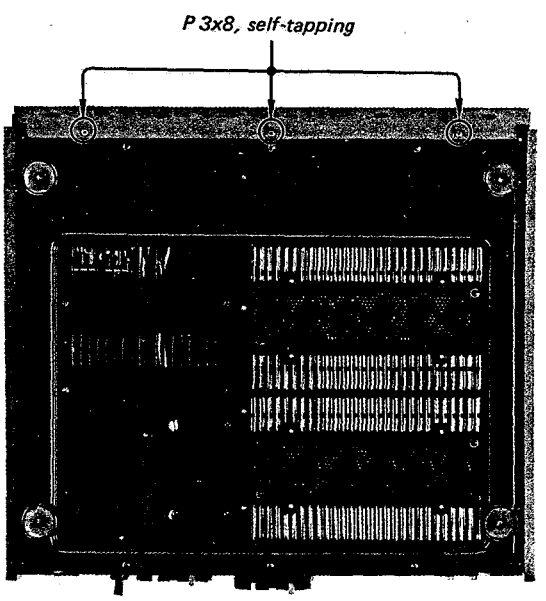

Fig. 1-3. Front panel removal (2)

1-2. FRONT SUBCHASSIS AND REAR PANEL REMOVAL

Remove the screws shown in Fig. 1-4. and Fig. 1-5.

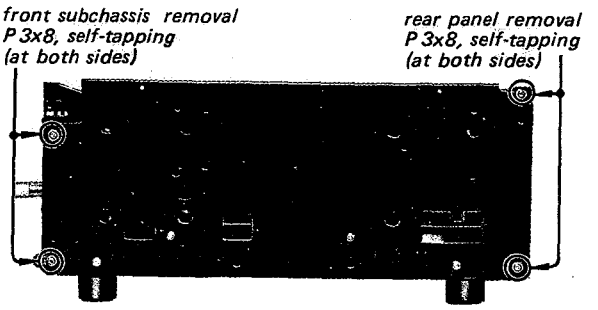

Fig. 1-4. Front subchassis and rear panel removal (1)

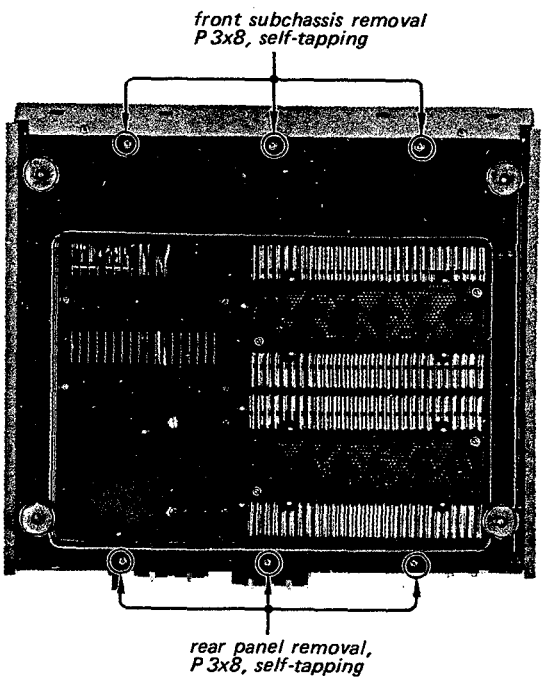

Fig. 1-5. Front subchassis and rear panel removal (2)

1-3. PEAK PROGRAM METER REPLACEMENT

Remove the screws shown in Fig. 1-6 and Fig. 1-7.

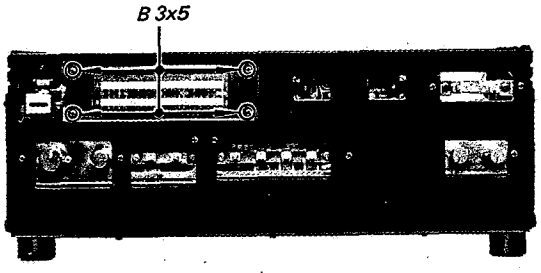

Fig. 1-6. Peak program meter bracket removal

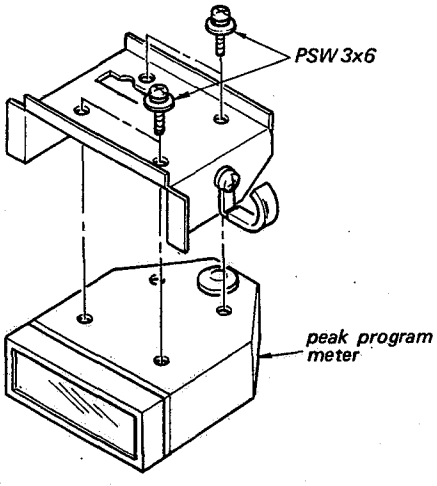

Fig. 1-7. Peak program meter replacement

1-4. CIRCUIT BOARD REMOVAL

Class-B Amp Board Removal

Remove the screws shown in Fig. 1-8 and Fig. 1-9.

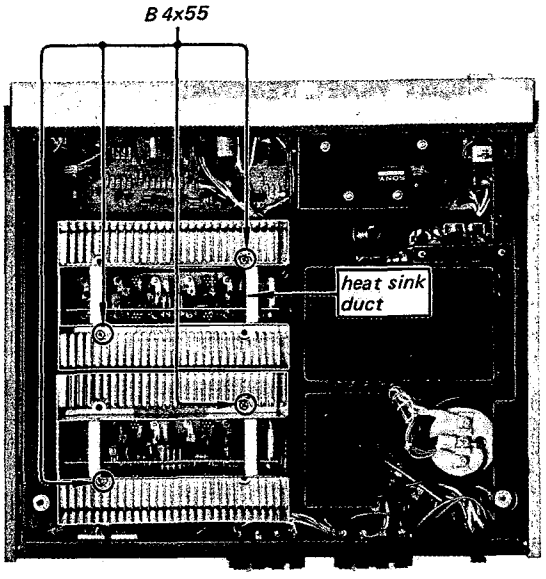

Fig. 1-8. Heat sink duct removal

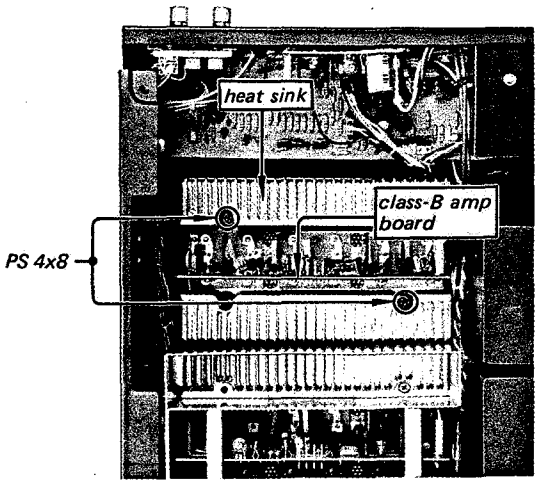

Fig. 1-9. Heat sink and class-B amp board removal

Class-A Amp Board and Meter Board Removal

See Fig. 1-10.

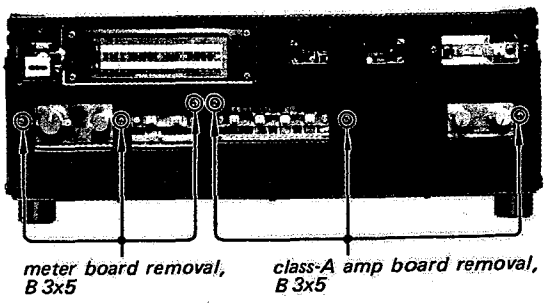

Fig. 1-10. Class-A amp board and meter board removal

Regulator Board Removal

Remove the two nylon rivets shown in Fig. 1-11.

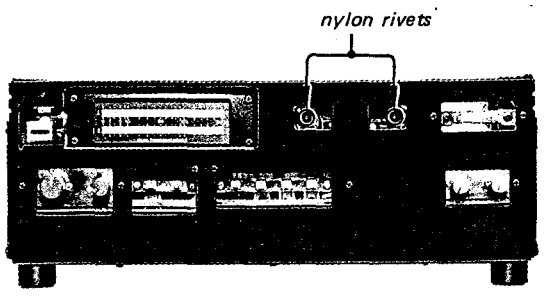

Fig. 1-11. Regulator board removal

Power Supply Board Removal

Remove the two screws shown in Fig. 1-12.

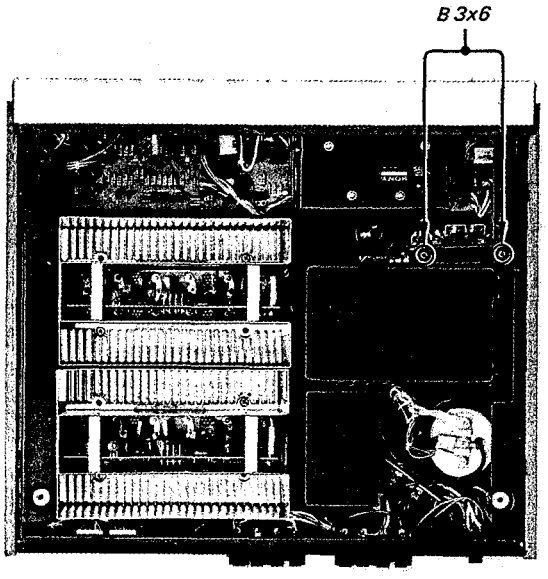

Fig. 1-12. Power supply board removal

Input Board Removal

1. Remove the rear panel as described in Procedure 1-2.
2. Remove the screws and nylon rivets shown in Fig. 1-13.

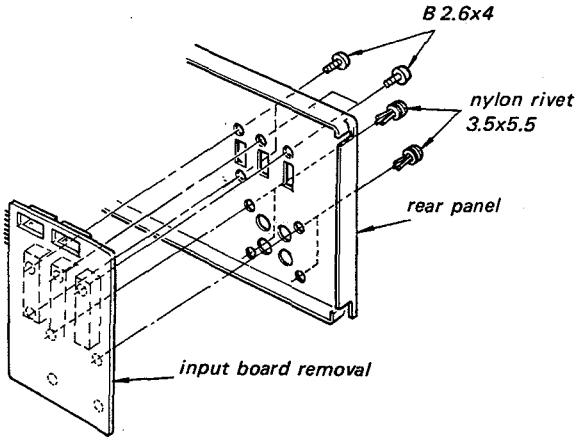

Fig. 1-13. Input board removal

1-5. POWER TRANSISTOR REPLACEMENT

Remove the screws shown in Fig. 1-14 and Fig. 1-15.

Note: When replacing the power transistor, apply a coating of a heat-transferring grease to both sides of the mica insulator as shown in Fig. 1-15. Any excess grease squeezed out when the screws (B 3x12) are tightened should be wiped off with a clean cloth. This prevents it from accumulating conductive dust particles that might eventually cause a short.

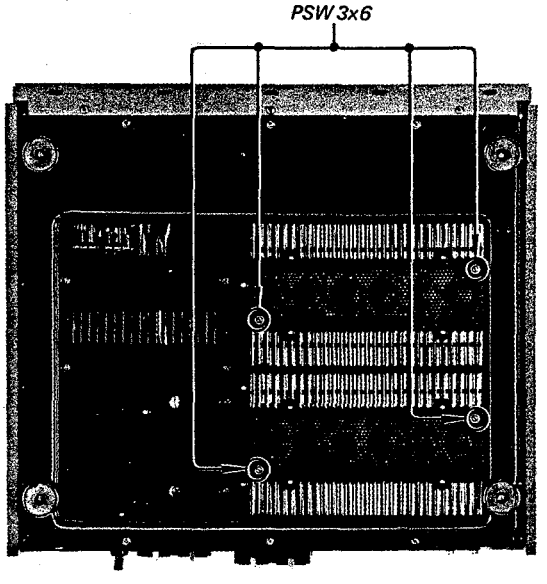

Fig. 1-14. Bottom plate cover removal

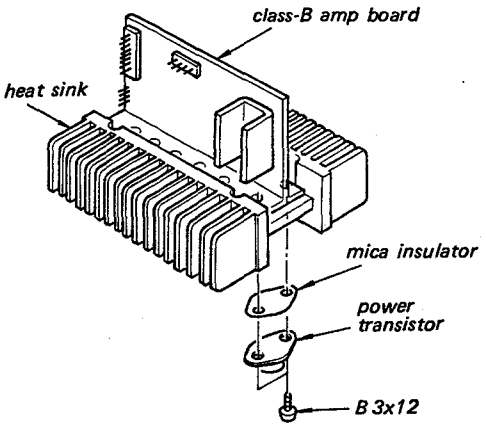

Fig. 1-15. Power transistor replacement

1-6. CHASSIS LAYOUT

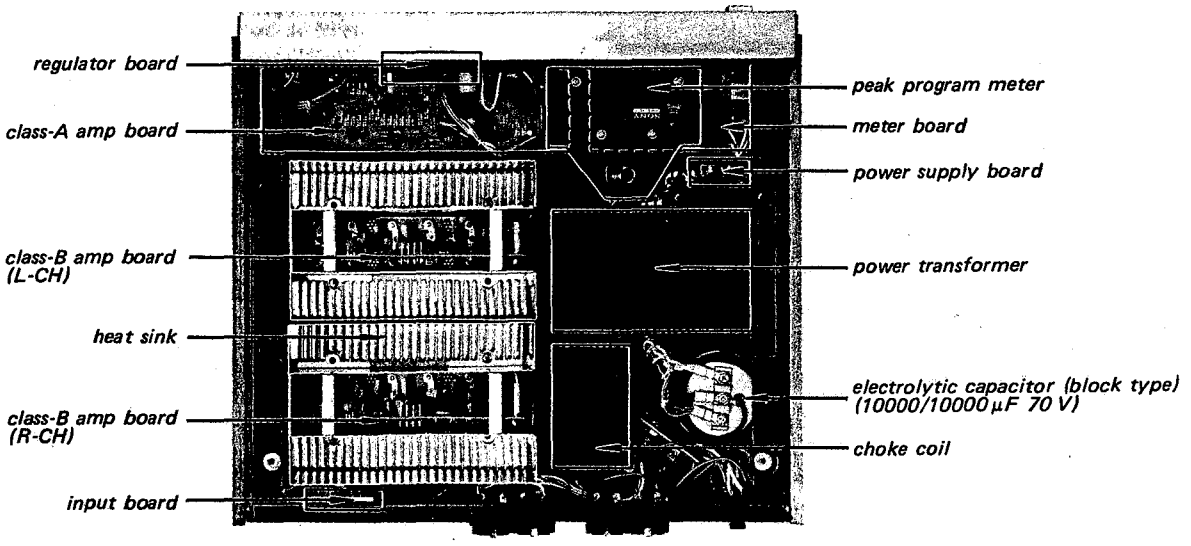

Fig. 1-16. Chassis layout — top view —

SECTION 2
ADJUSTMENTS

Note: Allow about five minutes for warm-up.

2-1. POWER VOLTAGE ADJUSTMENT

Regulator Board

CAUTION

Never short the test terminal pin to ground, because the voltage difference between the each pin and ground is 70～76 V in absolute value.

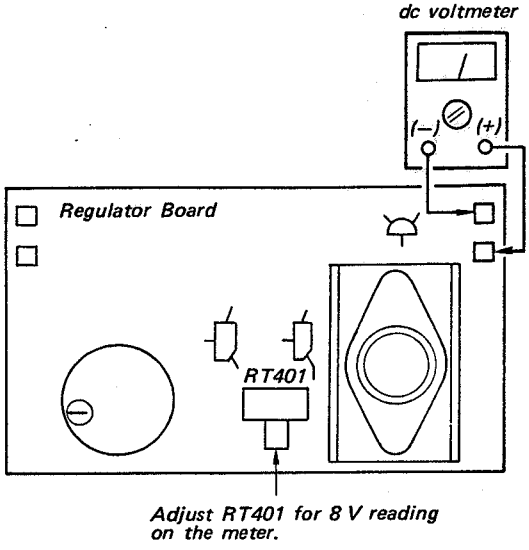

Fig. 2-1.

Class-A Amp Board

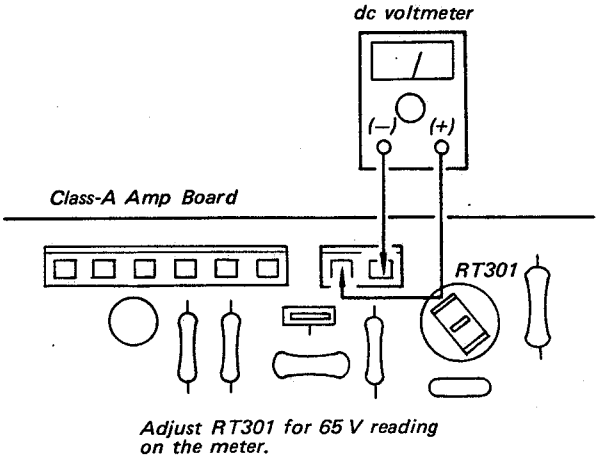

Fig. 2-2.

Note: If this adjustment has not been made correctly, enough output will not be obtained.

Power Supply Board

Note: Always connect the 8 Ω load across the SPEAKER OUT "A" and feed a 1 kHz signal to TAN-8250 during the adjustment.

Test setup:

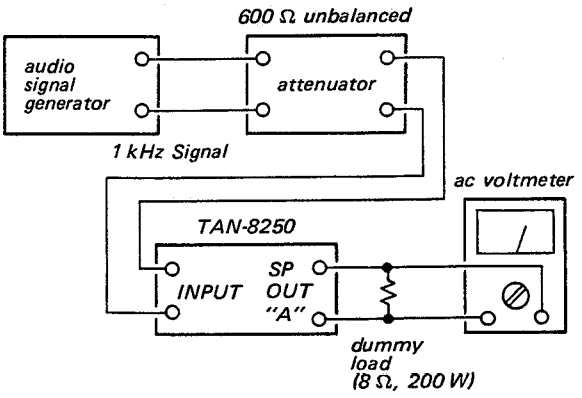

Fig. 2-3.

Preparation

1. Set the TAN-8250 switches and control as follows:

   SPEAKER switch ..... A
   POWER LIMITER switch ... FULL POWER
   INPUT switch ..... NORMAL
   MODE switch 2CH
   LEVEL control ..... fully clockwise

2. Feed a 1 kHz signal to TAN-8250, and adjust the attenuator for 50 W (20.0 V) on the meter.
3. Connect the dc voltmeter across terminal pins of capacitor as shown in Fig. 2-4.
4. With the 1 kHz signal fed, adjust RT331 (See Fig. 2-5.) for 65 V reading (See Fig. 2-4.) on the meter, respectively.

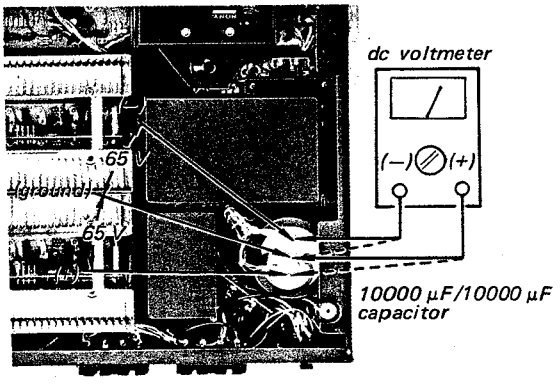

Fig. 2-4.

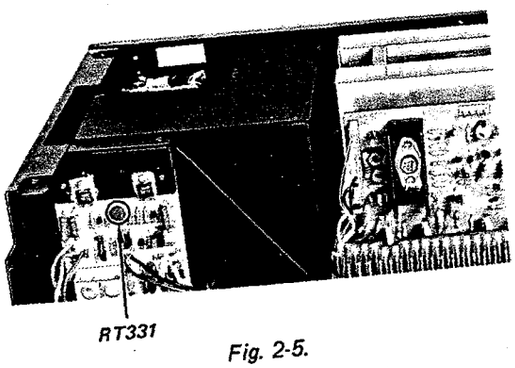

Fig. 2-5.

2-2. DC BALANCE ADJUSTMENT

Preparation:

1. Set the TAN-8250 switches as follows:
   SPEAKER switch ..... A
   MODE switch 2CH
2. Connect the dc voltmeter across the SPEAKER OUT "A".

Procedure:

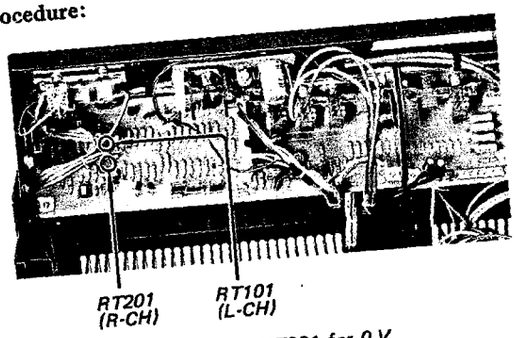

Adjust RT101 and RT201 for 0 V reading on the meter.

Fig. 2-6.

Note: The dc balance and dc bias adjustments should be alternately repeated two or three times.

2-3. DC BIAS ADJUSTMENT

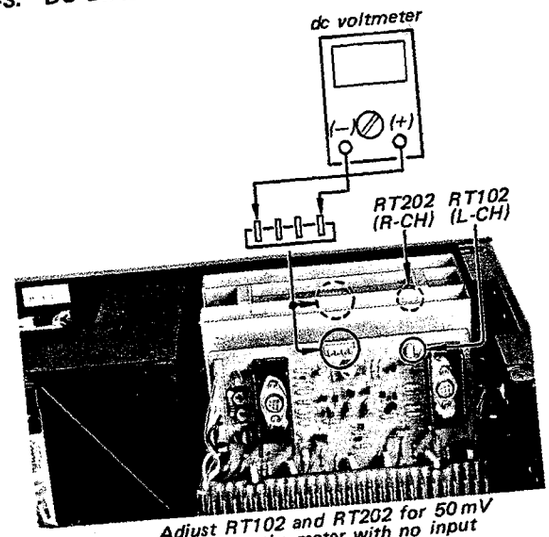

Adjust RT102 and RT202 for 50 mV reading on the meter with no input signal.

Fig. 2-7.

Note: The dc balance and dc bias adjustments should be alternately repeated two or three times.

2-4. PEAK PROGRAM METER ADJUSTMENT AND CHECK

Test setup:

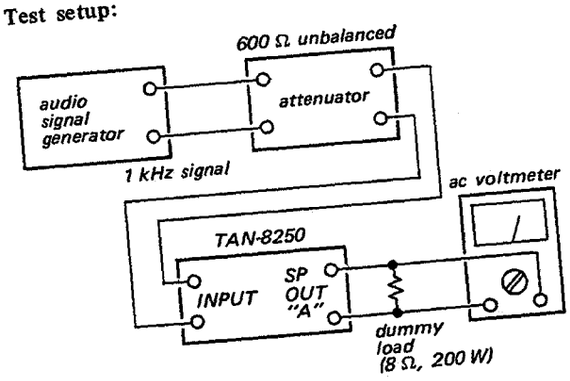

Fig. 2-8.

Preparation:

Set the TAN-8250 switches as follows:

SPEAKER switch ..... A
POWER LIMITER switch ... FULL POWER
METER SENSITIVITY
switch x1
MODE switch 2CH
INPUT switch ..... NORMAL

Procedure:

1. Feed a 1 kHz signal to INPUT jack and adjust the attenuator for 100 W (28.3 V) reading on the ac voltmeter.
2. Adjust RT181 and RT281 (See Fig. 2-9.) so that the peak program meter reads 100 W.

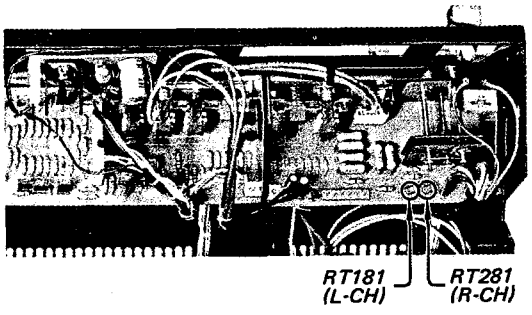

Fig. 2-9.

3. Decrease the output of attenuator 10 dB, and confirm that the peak program meter reads 10 W.
4. Change the METER SENSITIVITY switch to "x1/10", and confirm that the peak program meter reads 100 W.
5. Decrease the output of attenuator 10 dB, and confirm that the peak program meter reads 10 W.
6. Change the METER SENSITIVITY switch to "x1", and confirm that the peak program meter reads 1 W.

SECTION 3
DIAGRAMS

3-1. MOUNTING DIAGRAM – Meter Board –

– Conductor Side –

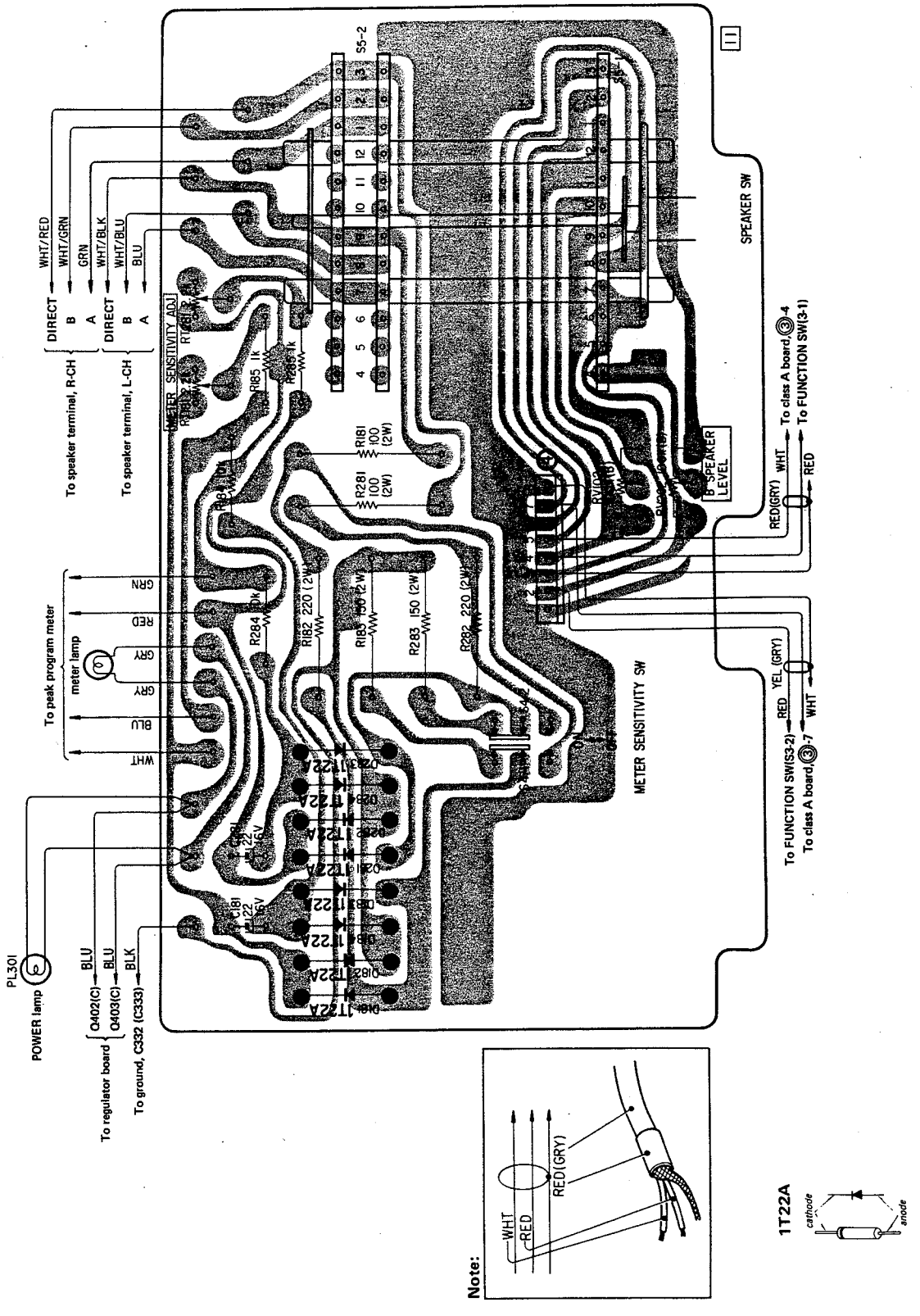

3-2. MOUNTING DIAGRAM – Input Board –

– Conductor Side –

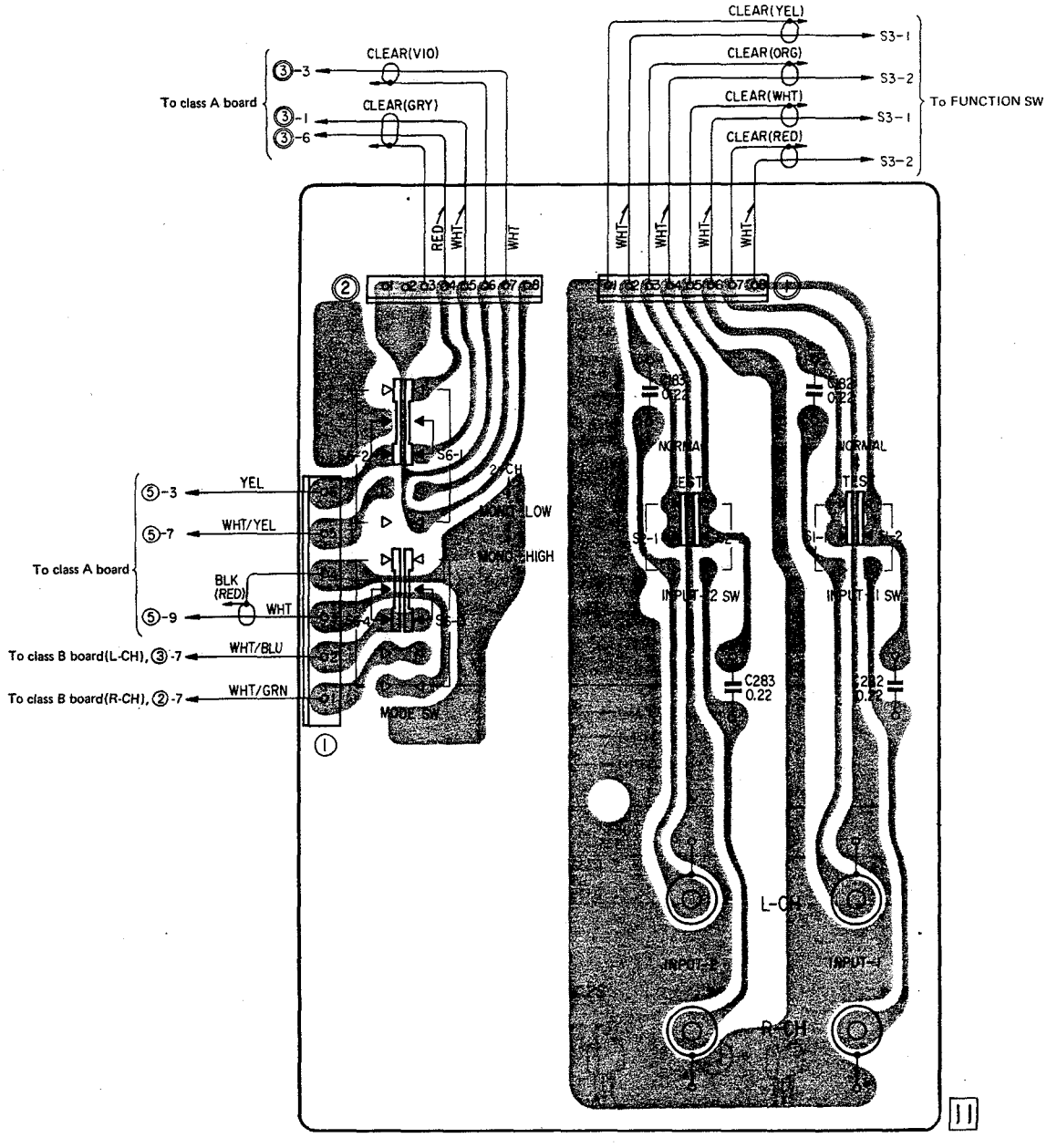

Note:

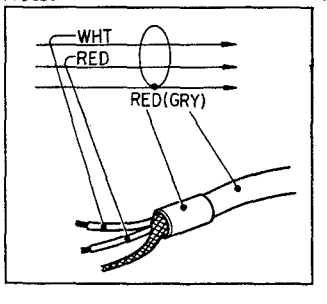

3-3. MOUNTING DIAGRAM – Power Supply Board –

– Conductor Side –

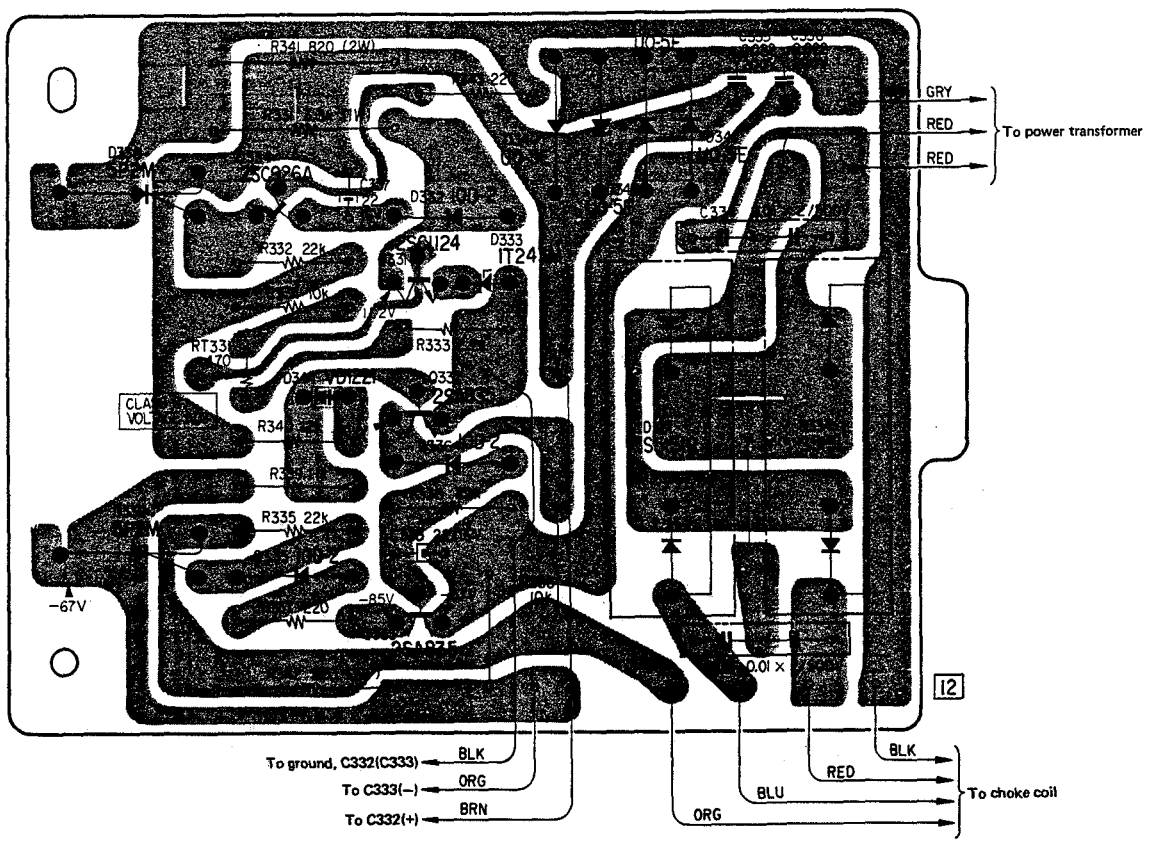

Parts Location										
Q			Q334	Q331 Q332 Q333						
D	D338 D339		D344 D335	D332 D333 D336	D340	D342	D343	D341 D331	D334	

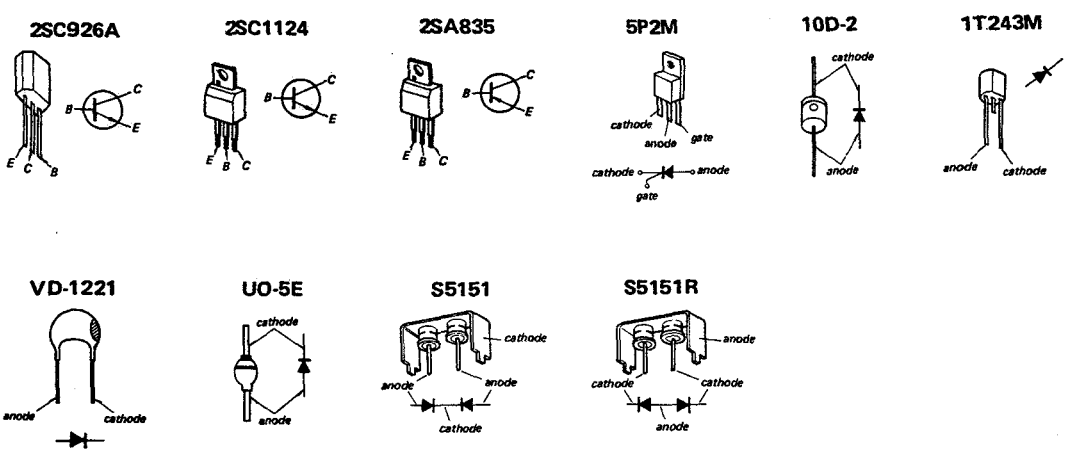

3-4. MOUNTING DIAGRAM — Regulator Board —

— Conductor Side —

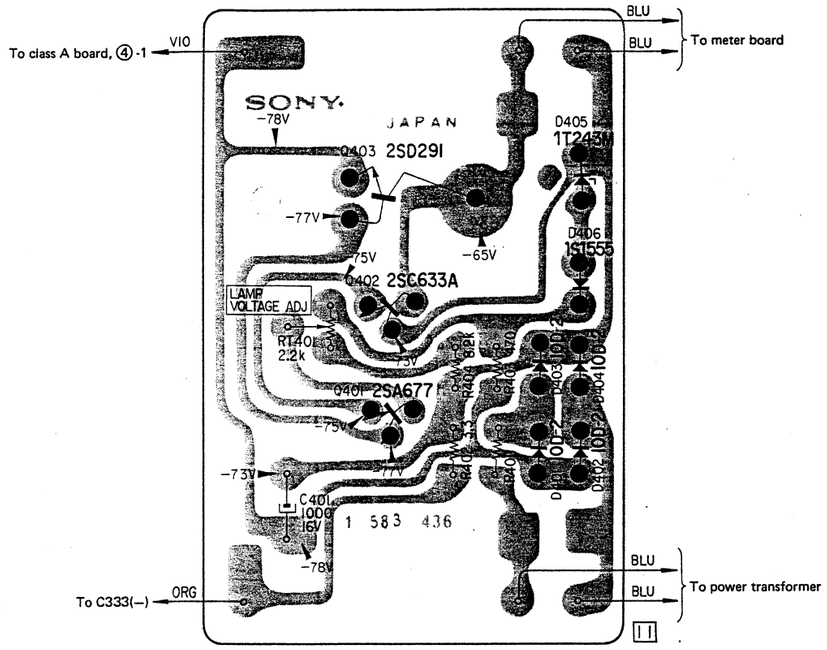

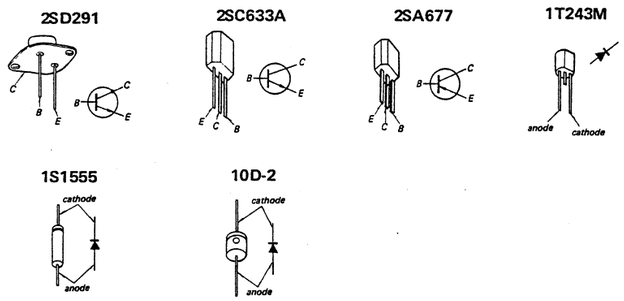

3-5. MOUNTING DIAGRAM — Class-B Amp Board —

— Conductor Side —

(L-channel)

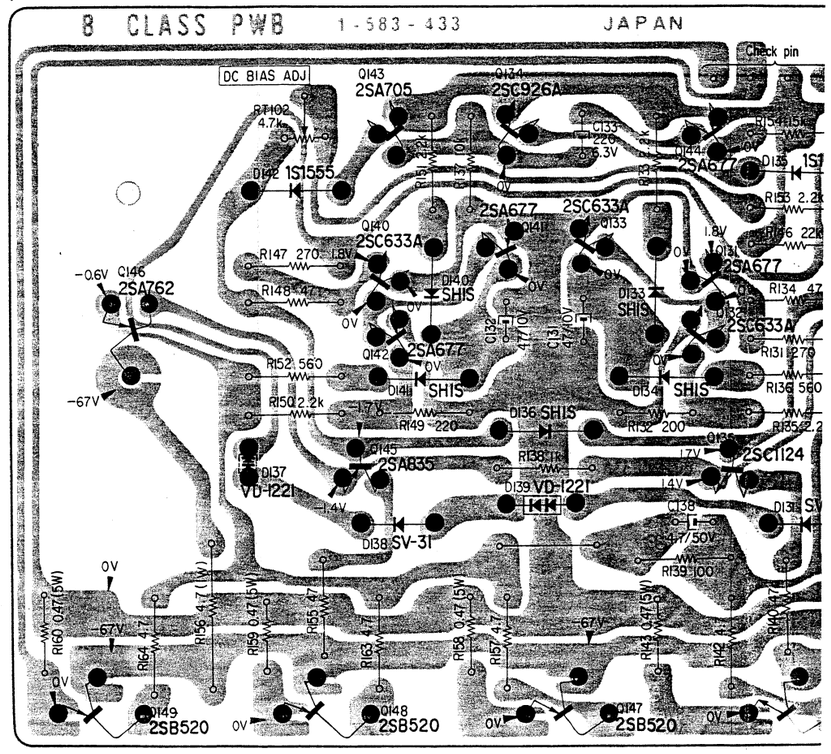

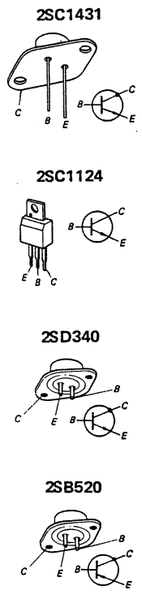

Parts Location

| | | |

TAN-8250

3-5. MOUNTING DIAGRAM – Class-B Amp Board –

– Conductor Side –

(L-channel)

Note: R-CH is the same as L-CH.

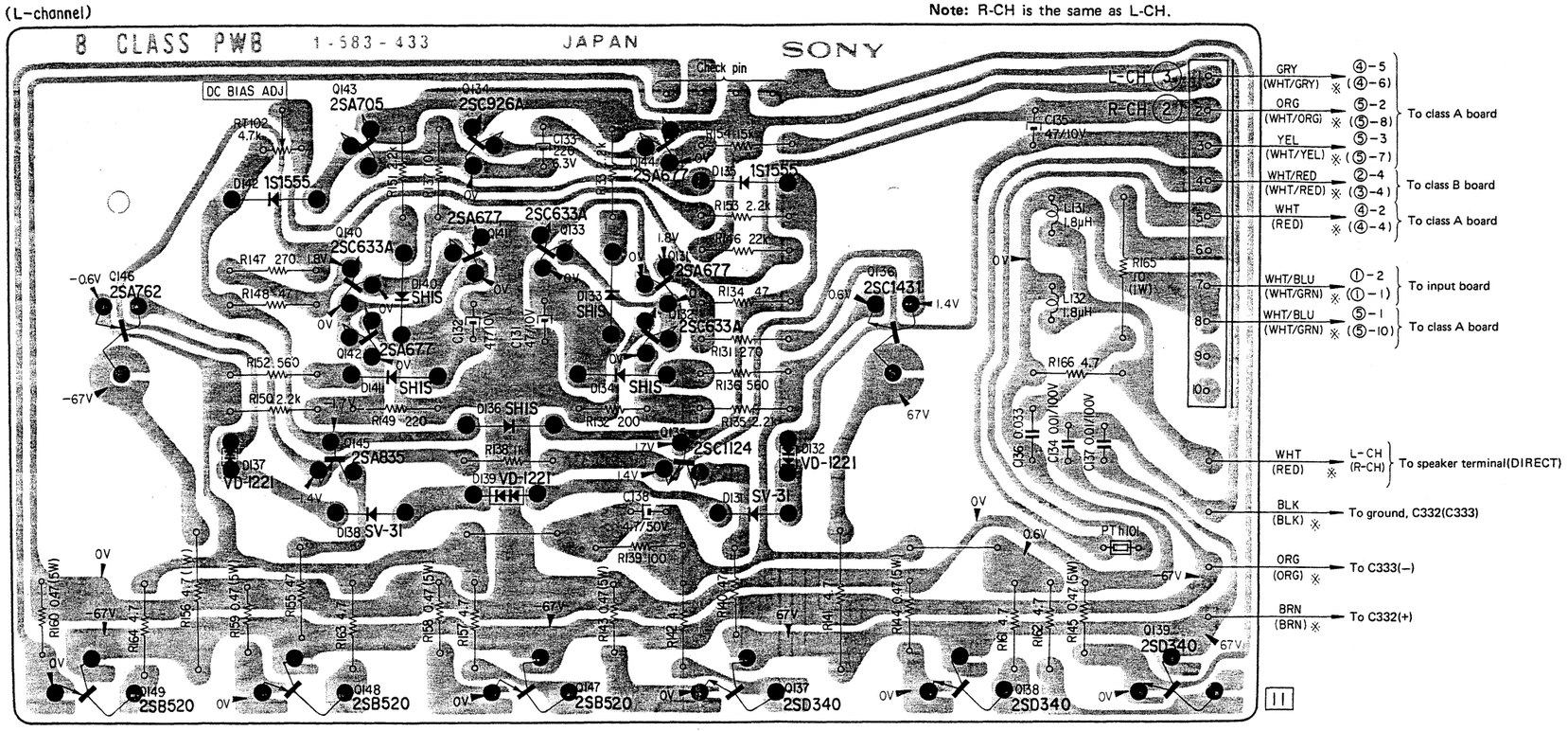

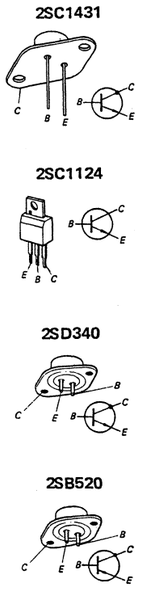

Parts Location

Q	Q146 Q149 Q148 Q143 Q140 Q142 Q145 Q134 Q141 Q133 Q144 Q131 Q132 Q135 Q147 Q137 Q136 Q138 Q139
D	D142 D137 D140 D141 D138 D136 D139 D133 D134 D135 D132 D131

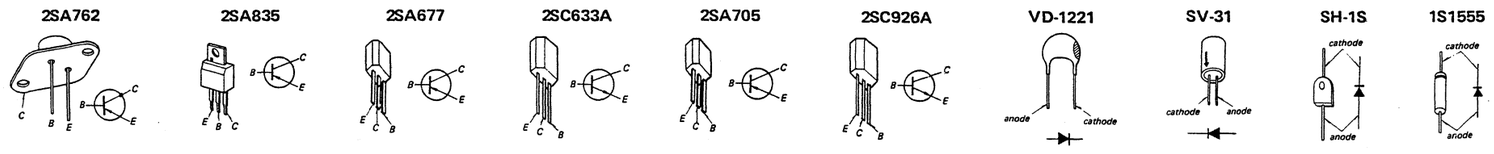

Note: The reference numbers in R-channel start from 200's.

※ mark shows the lead wire of R channel.

3-6. MOUNTING DIAGRAM — Class-A Amp Board —

— Conductor Side —

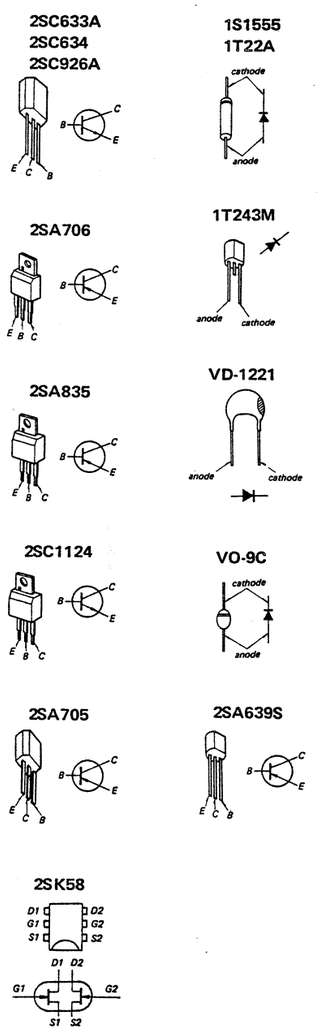

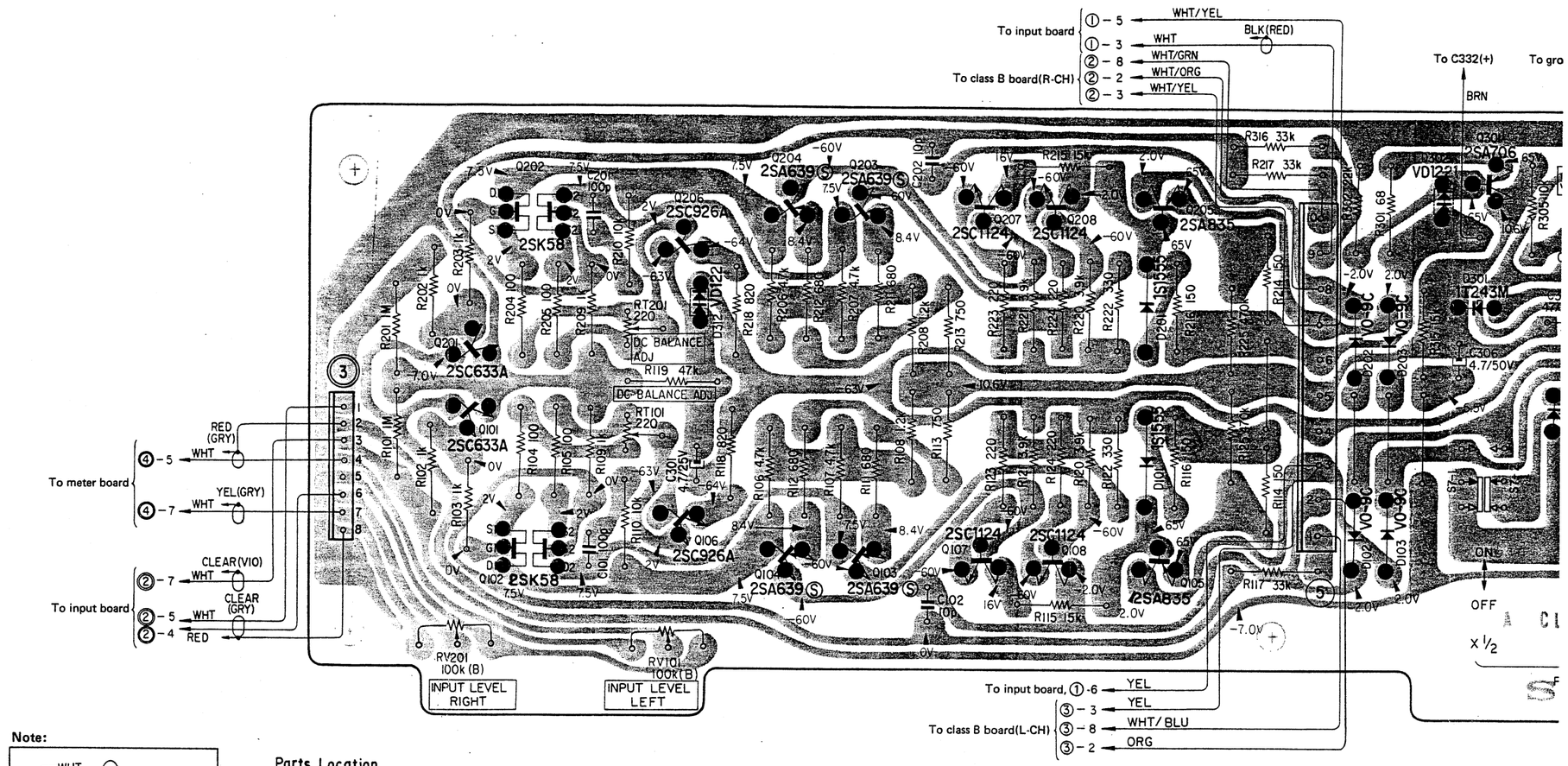

Note:

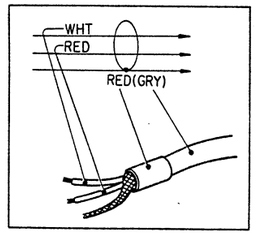

Parts Location

| | | |

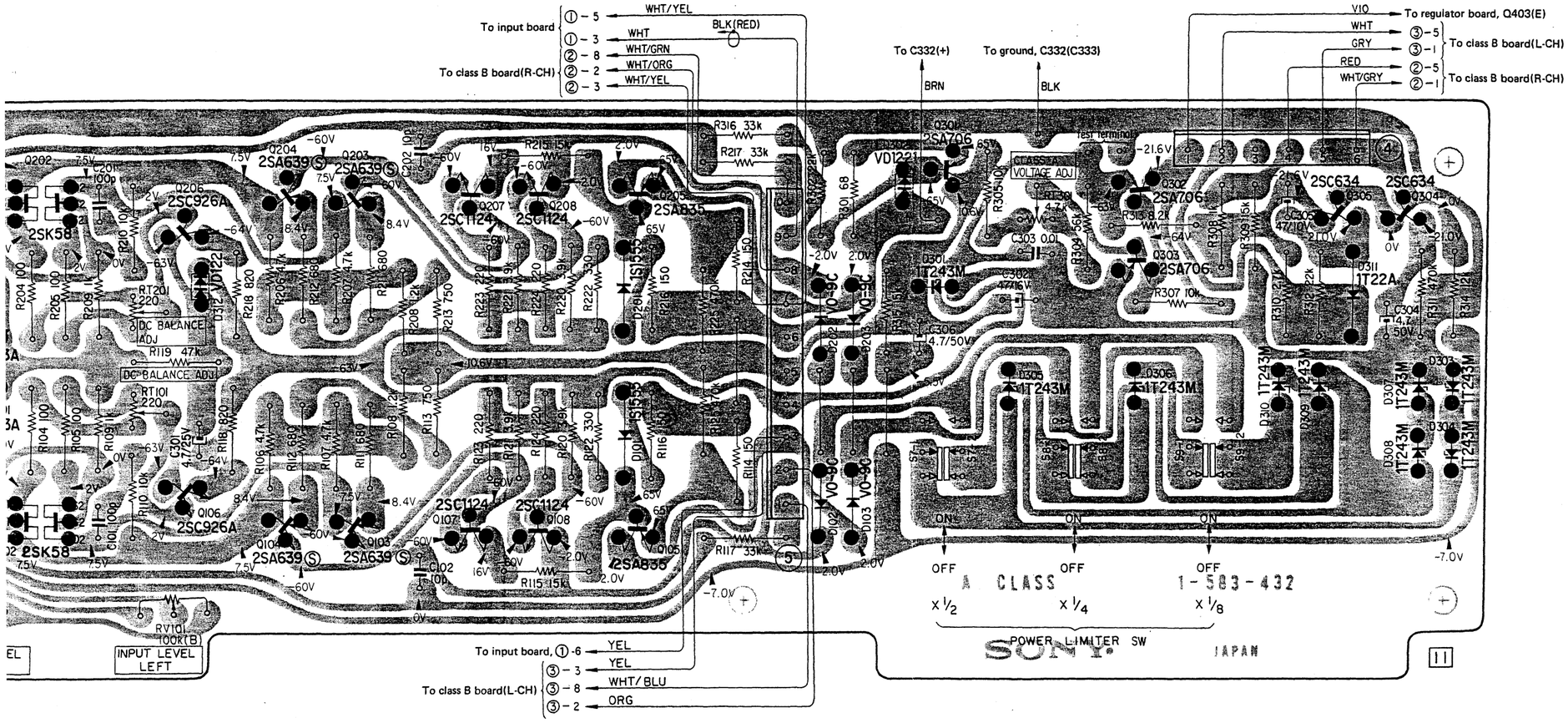

Q202	Q206	Q204	Q203	Q207	Q208	Q205			Q301		Q302 Q303		Q305	Q304	
Q102	Q106	Q104	Q103	Q107	Q108	Q105									
	D312					D201 D101	D202 D203 D102 D103	D302 D301	D305		D306	D310	D309 D311	D307 D303 D308 D304	
RT201 RT101									RT301						

3-7. SCHEMATIC DIAGRAM

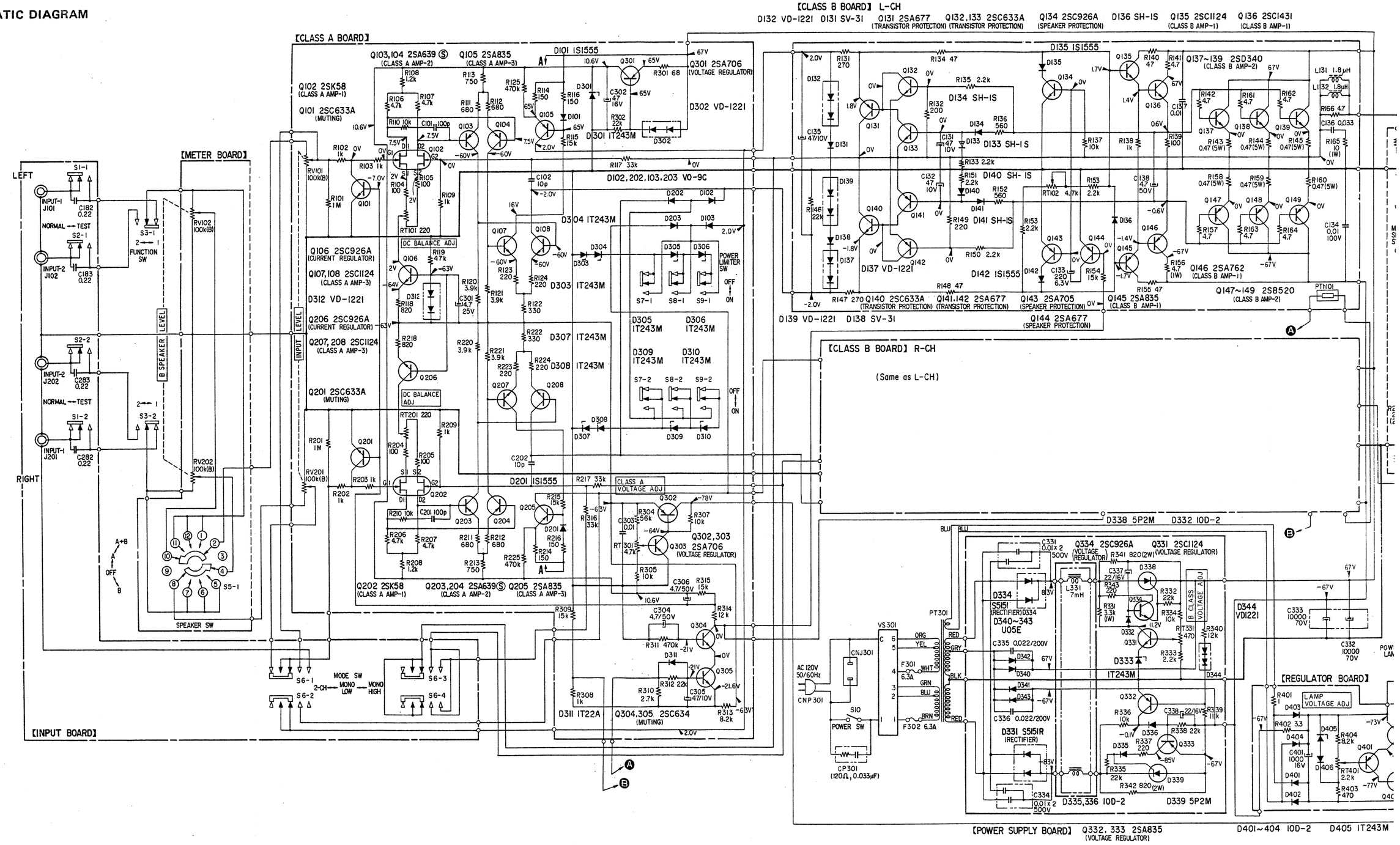

TAN-8250

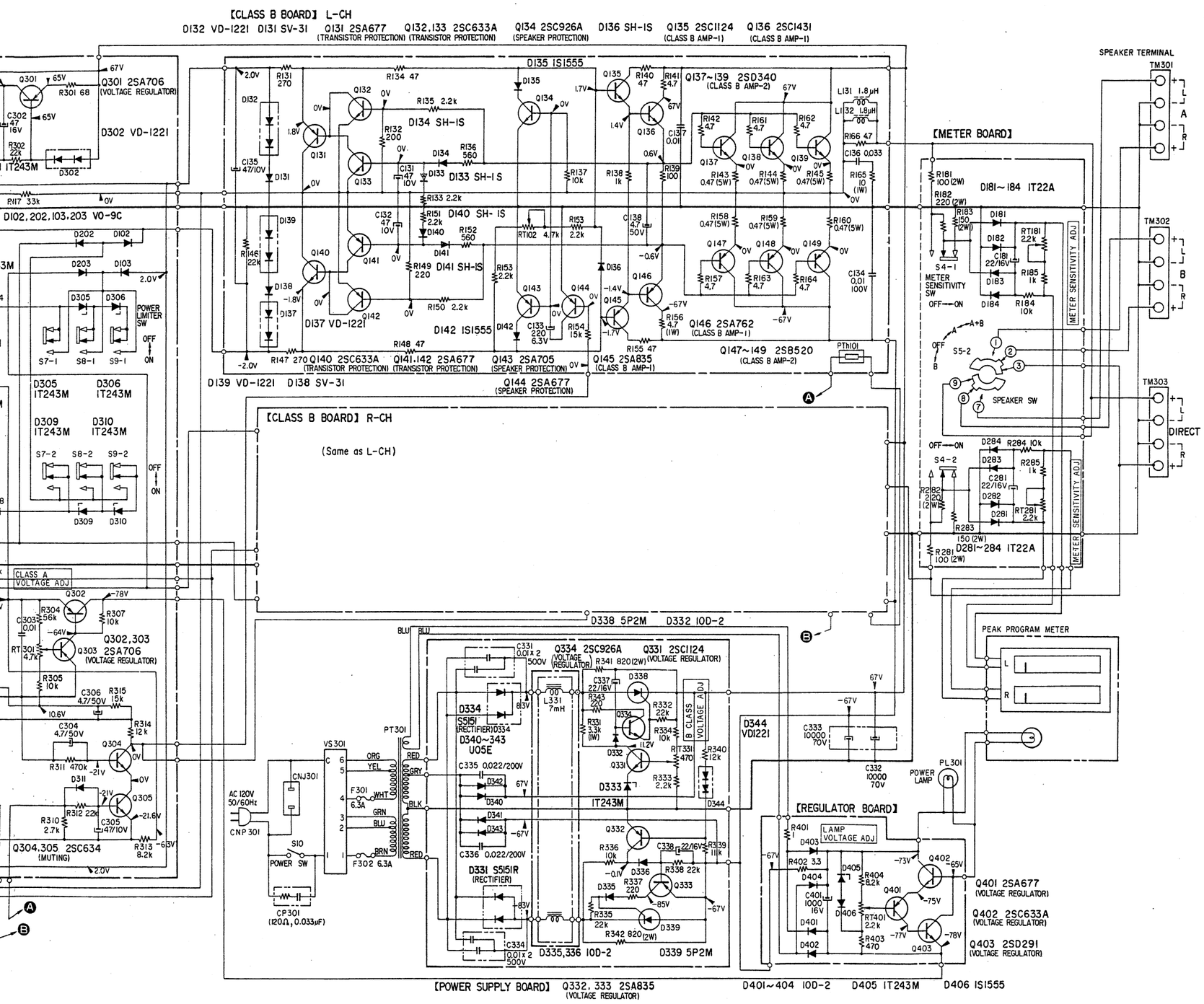

Ref. No.	Description	Position
S1	INPUT-1 SW (NORMAL-TEST)	NORMAL
S2	INPUT-2 SW (NORMAL-TEST)	NORMAL
S3	FUNCTION SW (INPUT-1 – INPUT-2)	INPUT-1
S4	METER SENSITIVITY SW	ON
S5	SPEAKER SW (A+B-A-OFF-B)	B
S6	MODE SW (2-CH-MONO LOW-MONO HIGH)	2-CH
S7	POWER LIMITER (1/8) SW	OFF
S8	POWER LIMITER (1/4) SW	OFF
S9	POWER LIMITER (1/2) SW	OFF
S10	POWER SW	OFF

Note:

All resistance values are in ohms. k = 1,000 M = 1,000 k

All capacitance values are in μF except as indicated with p, which means μμF.

All voltages are dc measured with a VOM which has an input impedance of 20 k ohms/volt. No signal in.

Voltage variations may be noted because of normal production tolerances.

MEMO

SECTION 4
EXPLODED VIEWS

(1)

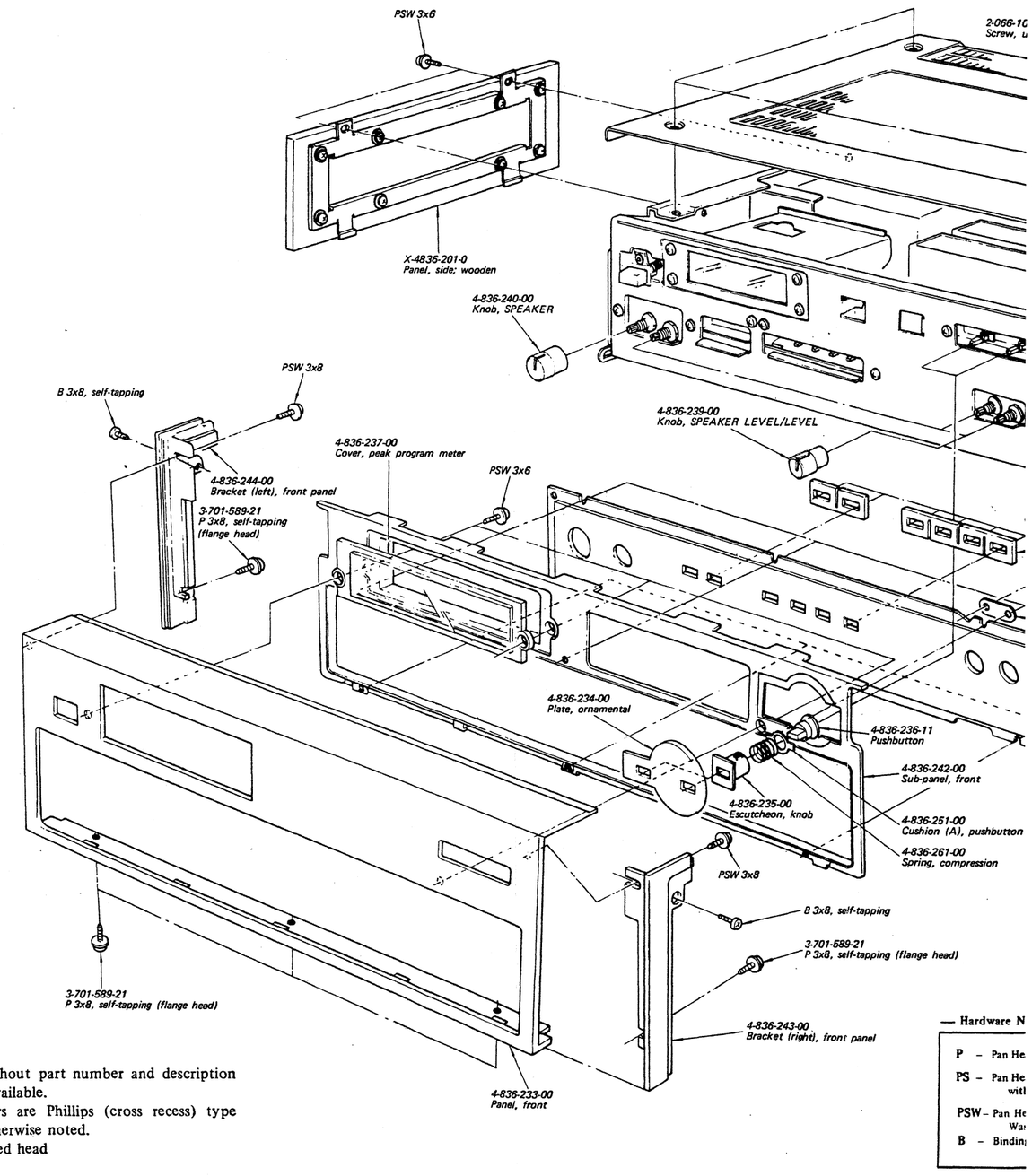

Note: o Items without part number and description are not available.
o All screws are Phillips (cross recess) type unless otherwise noted.
(–) = slotted head

SECTION 4
EXPLODED VIEWS

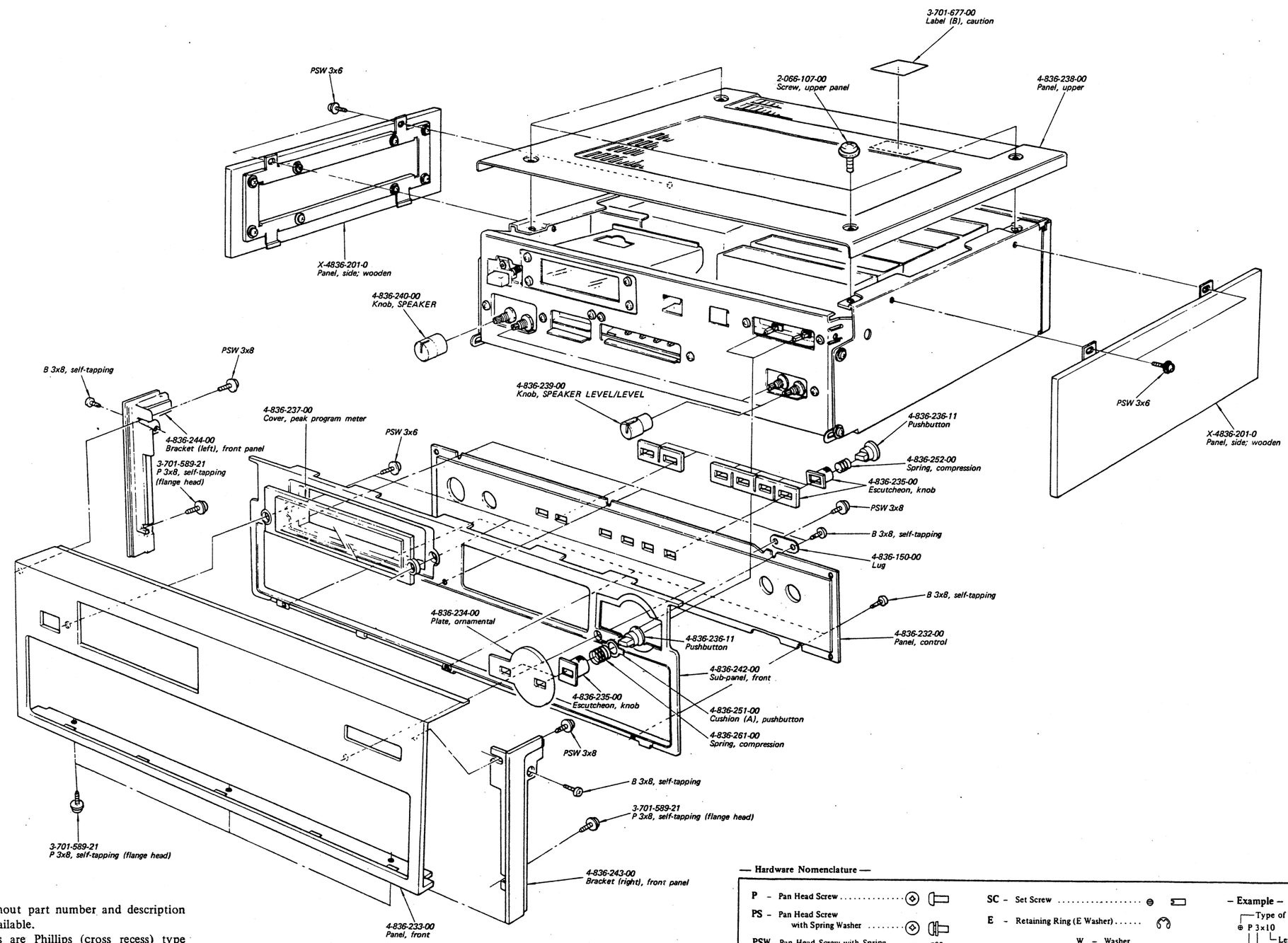

Note: ○ Items without part number and description are not available.
○ All screws are Phillips (cross recess) type unless otherwise noted.
(–) = slotted head

— Hardware Nomenclature —

P – Pan Head Screw
PS – Pan Head Screw with Spring Washer
PSW – Pan Head Screw with Spring Washer and Washer
B – Binding Head Screw
SC – Set Screw
E – Retaining Ring (E Washer)
W – Washer
SW – Spring Washer
LW – Lock Washer
N – Nut

– Example –
Type of Slot
⊕ P 3x10
Length in mm (L)
Diameter in mm (D)
Type of Head

(2)

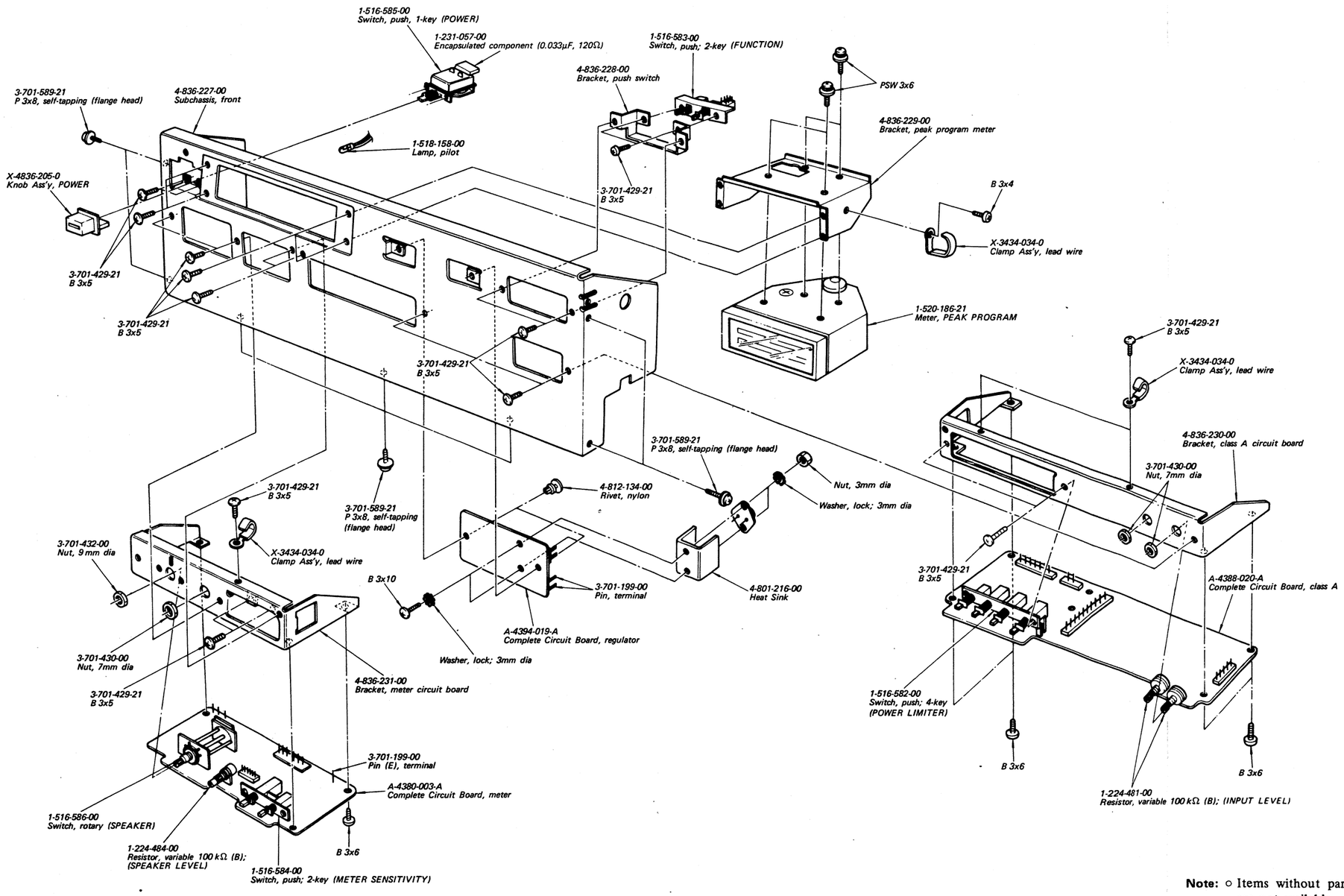

Note: ○ Items without part number and description are not available.
○ All screws are Phillips (cross recess) type unless otherwise noted.
(–) = slotted head

(3)

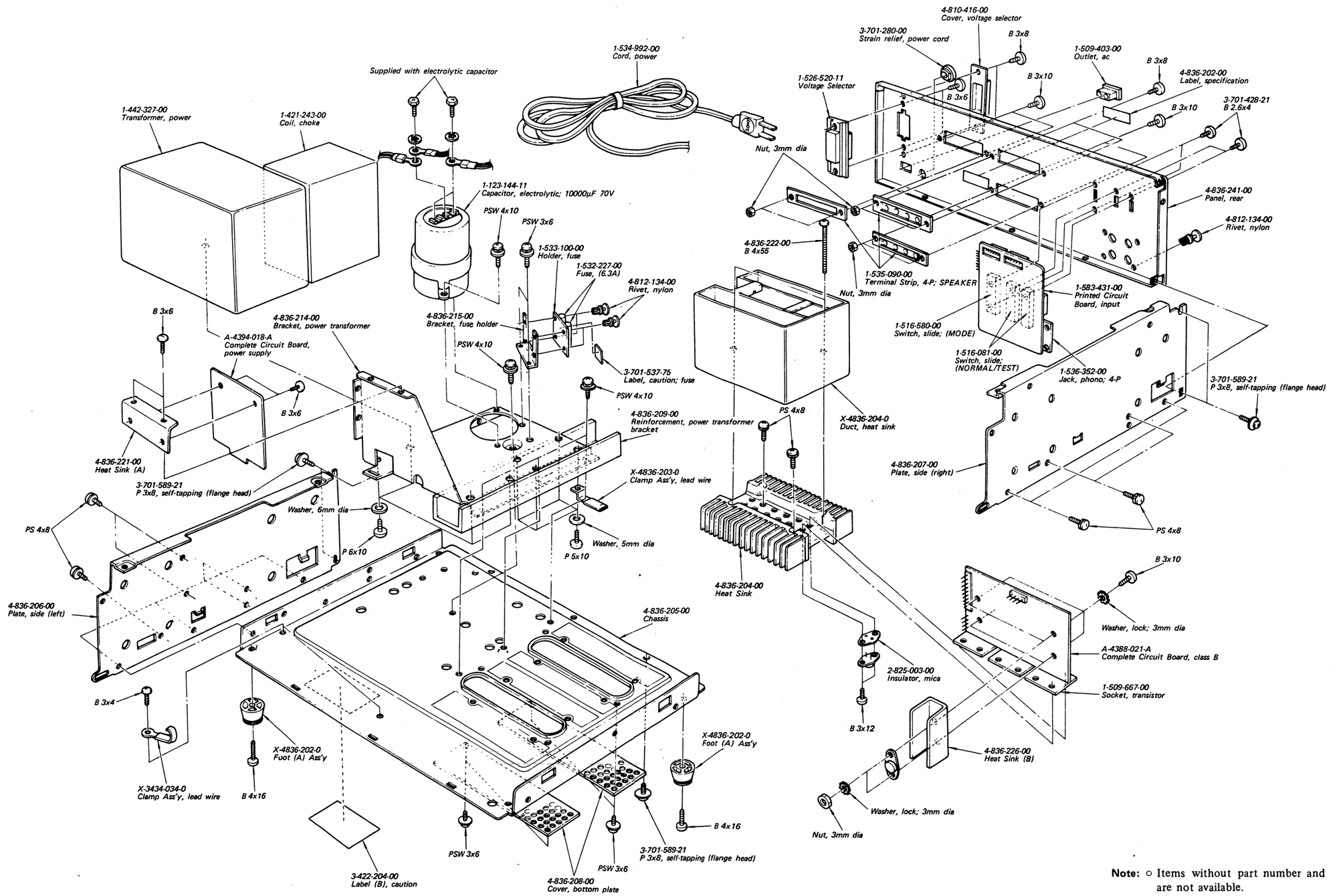

Note: ○ Items without part number and description are not available.
○ All screws are Phillips (cross recess) type unless otherwise noted.
(–) = slotted head

SECTION 5
ELECTRICAL PARTS LIST

Ref. No.	Part No.	Description	
		CIRCUIT BOARDS	
	A-4380-003-A	Meter, complete	
	A-4388-020-A	A Class, complete	
	A-4388-021-A	B Class, complete	
	A-4394-018-A	Power Supply, complete	
	A-4394-019-A	Regulator, complete	
	1-583-431-00	Input	
		SEMICONDUCTORS	
Q101(Q201)		Transistor	2SC633A
Q102(Q202)		FET	2SK58
Q103(Q203)		Transistor	2SA639S
Q104(Q204)		Transistor	2SA639S
Q105(Q205)		Transistor	2SA835
Q106(Q206)		Transistor	2SC926A
Q107(Q207)		Transistor	2SC1124
Q108(Q208)		Transistor	2SC1124
Q131(Q231)		Transistor	2SA677
Q132(Q232)		Transistor	2SC633A
Q133(Q233)		Transistor	2SC633A
Q134(Q234)		Transistor	2SC926A
Q135(Q235)		Transistor	2SC1124
Q136(Q236)		Transistor	2SC1431
Q137~Q139 (Q237~Q239)		Transistor	2SD340
Q140(Q240)		Transistor	2SC633A
Q141(Q241)		Transistor	2SA677
Q142(Q242)		Transistor	2SA677
Q143(Q243)		Transistor	2SA705
Q144(Q244)		Transistor	2SA677
Q145(Q245)		Transistor	2SA835
Q146(Q246)		Transistor	2SA762
Q147~Q149 (Q247~Q249)		Transistor	2SB520
Q301~Q303		Transistor	2SA706
Q304~Q305		Transistor	2SC634A
Q331		Transistor	2SC1124
Q332,Q333		Transistor	2SA835
Q334		Transistor	2SC926A
Q401		Transistor	2SA677
Q402		Transistor	2SC633A
Q403		Transistor	2SD291
D101~D103 (D201~D203)		Diode	1S1555
D131(D231)		Diode	SV-31
D132(D232)		Diode	VD-1221
D133(D233)		Diode	SH-1S
D134(D234)		Diode	SH-1S
D135(D235)		Diode	1S1555
D136(D236)		Diode	SH-1S
D137(D237)		Diode	VD-1221
D138(D238)		Diode	SV-31
D139(D239)		Diode	VD-1221
D140(D240)		Diode	SH-1S
D141(D241)		Diode	SH-1S
D142(D242)		Diode	1S1555
D181~D184 (D281~D284)		Diode	1T22A
D301		Diode	1T243M
D302		Diode	VD-1221
D303~D310		Diode	1T243M
D311		Diode	1T22A
D312		Diode	VD-1221
D331		Diode	S5151
D332		Diode	10D-2
D333		Diode	1T243M
D334		Diode	S5151R
D335		Diode	10D-2
D336		Diode	10D-2
D337		----------	
D338		Diode	5P2M
D339		Diode	5P2M
D340~D343		Diode	UO-5E
D344		Diode	VD-1221

Ref. No.	Part No.	Description	
D401~D404		Diode	10D-2
D405		Diode	1T243M
D406		Diode	1S1555
Pth301, Pth302	1-800-340-00	Posistor	

CAPACITORS

Capacitors listed here are electrolytic type unless otherwise specified and in μF except as indicated with p (p means μμ).

Ref. No.	Part No.	Description		
C101(C201)	1-102-973-11	100p	50V	ceramic
C102(C202)	1-102-947-11	10p	50V	ceramic
C131(C231)	1-121-352-11	47	10V	
C132(C232)	1-121-352-11	47	10V	
C133(C233)	1-121-419-11	220	6.3V	
C134(C234)	1-108-657-12	0.01	100V	mylar
C135(C235)	1-121-352-11	47	10V	
C136(C236)	1-108-843-12	0.033	50V	mylar
C137(C237)	1-108-657-12	0.01	100V	mylar
C138(C238)	1-121-396-11	4.7	50V	
C181(C281)	1-121-990-11	22	16V	
C182(C282)	1-105-677-12	0.22	50V	mylar
C183(C283)	1-105-677-12	0.22	50V	mylar
C301	1-121-395-11	4.7	25V	
C302	1-121-409-11	47	25V	
C303	1-108-657-12	0.01	100V	mylar
C304	1-121-396-11	4.7	50V	
C305	1-121-352-11	47	10V	
C306	1-121-396-11	4.7	50V	
C331	1-102-355-11	0.01 (2 pieces)	500V	ceramic
C332/C333	1-123-144-11	10000	70V	electrolytic (block type)
C334	1-102-355-11	0.01 (2 pieces)	500V	ceramic
C335	1-105-757-12	0.022	200V	mylar
C336	1-105-757-12	0.022	200V	mylar
C337	1-121-990-11	22	16V	
C338	1-121-990-11	22	16V	
C401	1-121-245-11	1000	16V	

RESISTORS

All resistors are in Ω. ¼W, ±5% carbon resistors (except particular type) are omitted.
Check schematic diagram for the resistance values.
k = 1000, M = 1000 k.

Ref. No.	Part No.	Description		
R109(R209)	1-211-913-11	1k	±1%	carbon
R117(R217)	1-210-509-11	33k	±1%	carbon
R141(R241)	1-209-144-21	4.7	1W	carbon
R143~R145 (R243~R245)	1-217-158-11	0.47	5W	metal
R156(R256)	1-209-144-21	4.7	1W	carbon
R158~R160 (R258~R260)	1-217-158-11	0.47	5W	metal
R165(R265)	1-209-148-21	10	1W	carbon
R181(R281)	1-206-640-11	100	2W	metal-oxide
R182(R282)	1-206-648-11	220	2W	metal-oxide
R183(R283)	1-206-644-11	150	2W	metal-oxide
R316	1-210-509-11	33k	±1%	carbon
R331	1-206-099-11	3.3k	1W	metal-oxide
R341(R342)	1-206-128-11	820	2W	metal-oxide
RT101(RT201)	1-224-550-00	220, adjustable		
RT102(RT202)	1-224-490-00	4.7k, adjustable		
RT181(RT281)	1-224-250-00	2.2k, adjustable		
RT301	1-224-251-00	4.7k, adjustable		
RT331	1-224-488-00	470, adjustable		
RT401	1-224-489-00	2.2k, adjustable		
RV101(RV201)	1-224-481-00	100k (B), variable (INPUT LEVEL)		
RV102(RV202)	1-224-484-00	100k (B), variable (SPEAKER LEVEL)		

SWITCHES

Ref. No.	Part No.	Description
S1,S2	1-516-081-00	Slide (NORMAL/TEST)
S3	1-516-583-00	Pushbutton, 2-key (FUNCTION)
S4	1-516-584-00	Pushbutton, 2-key (METER SENSITIVITY)
S5	1-516-586-00	Rotary (SPEAKER)

Ref. No.	Part No.	Description
S6	1-516-580-00	Slide (MODE)
S7~S9	1-516-582-00	Pushbutton, 4-key (POWER LIMITER)
S10	1-516-585-00	Pushbutton (POWER)

MISCELLANEOUS

Ref. No.	Part No.	Description
CNJ301	1-509-403-00	Outlet, ac
CNP301	1-534-992-00	Cord, power
CP301	1-231-057-00	Encapsulated Component, 0.033 μF + 120 Ω
F301,F302	1-532-227-00	Fuse, 6.3A
J101(J201) J102(J202)	1-536-352-00	Jack, phono; 4-P
L131(L231) L132(L232)	1-407-592-00	Microinductor, 1.8 μH
L331	1-421-243-00	Coil, choke
PL301	1-518-158-00	Lamp, POWER
PT301	1-442-327-00	Transformer, power
TM301~ TM303	1-535-090-00	Terminal Strip (SPEAKER)
VS301	1-526-520-11	Selector, voltage
	1-508-649-00	Connector, 10-P (male)
	1-508-650-00	Connector, 6-P (male)
	1-508-652-00	Connector, 8-P (male)
	1-508-692-00	Connector, 6-P (male)
	1-508-694-00	Connector, 8-P (male)
	1-509-667-00	Socket, transistor
	1-520-186-21	Meter, PEAK PROGRAM
	1-533-100-00	Holder, fuse
	1-536-354-00	Pin, terminal

CARTON AND ACCESSORIES

Ref. No.	Part No.	Description
	X-3701-029-0	Card Ass'y, warranty
	X-4490-002-0	Cloth Ass'y, polishing
	1-506-138-11	Plug, phono (red)
	1-506-138-12	Plug, phono (white)
	3-701-020-00	Bag, polyethylene; instruction manual
	3-701-300-00	Bag, polyethylene; unit
	3-701-730-00	Bag, polyethylene; IBM card
	3-701-742-00	Card, IBM
	3-780-427-21	Manual, instruction
	3-793-765-21	Sheet, check
	4-836-256-00	Carton
	4-836-257-00	Cushion, side
	4-836-258-00	Cushion, lower
	4-836-259-00	Cushion