TA-F60

US Model
Canadian Model
AEP Model
UK Model
PX Model

INTEGRATED STEREO AMPLIFIER

SPECIFICATIONS

GENERAL

Power Requirements: 120 V ac, 60 Hz (US, Canadian model)
220 V ac ~, 50/60 Hz (AEP model)
240 V ac ~, 50/60 Hz (UK model)
110, 120, 220 or 240 V ac, 50/60 Hz (PX model)

Power Consumption: 120 W (US model)
190 W (Canadian model)
310 W (AEP, PX model)
420 W (UK model)

Dimensions: Approx. 430 (w) x 155 (h) x 340 (d) mm
17 (w) x 6⅛ (h) x 13½ (d) inches
including projecting parts and controls

Weight: Approx. 6.7 kg, 14 lb 12 oz (net)
Approx. 7.7 kg, 17 lb (in shipping carton)

SAFETY-RELATED COMPONENT WARNING!!

COMPONENTS IDENTIFIED BY SHADING AND MARK ⚠ ON THE SCHEMATIC DIAGRAMS, EXPLODED VIEWS AND IN THE PARTS LIST ARE CRITICAL TO SAFE OPERATION. REPLACE THESE COMPONENTS WITH SONY PARTS WHOSE PART NUMBERS APPEAR AS SHOWN IN THIS MANUAL OR IN SUPPLEMENTS PUBLISHED BY SONY.

ATTENTION AU COMPOSANT AYANT RAPPORT À LA SÉCURITÉ!

LES COMPOSANTS IDENTIFIÉS PAR UN TRAMÉ ET UNE MARQUE ⚠ SUR LES DIAGRAMMES SCHÉMATIQUES, LES VUES EXPLOSÉES ET LA LISTE DES PIÈCES SONT CRITIQUES POUR LA SÉCURITÉ DE FONCTIONNEMENT. NE REMPLACER CES COMPOSANTS QUE PAR DES PIÈCES SONY DONT LES NUMÉROS SONT DONNÉS DANS CE MANUEL OU DES SUPPLÉMENTS PUBLIÉS PAR SONY.

POWER AMPLIFIER SECRION

Power Output and Total Harmonic Distortion: With 8 Ω loads, both channels driven, from 20–20,000 Hz; rated 75 W per channel minimum RMS power, with no more than 0.01 % total harmonic distortion from 250 mW to rated output.
(US, Canadian model)

Continuous RMS Power Output: (Less than 0.01 % THD, both channels driven simultaneously)
At 20 Hz–20 kHz
75 W + 75 W (8 Ω)
According to DIN 45500
75 W + 75 W (8 Ω)
(AEP, UK, PX model)

Power Bandwidth (IHF): 5 Hz – 30 kHz (37.5 W output, 0.01 % THD, 8 Ω) (AEP, UK, PX model)

Harmonic Distortion: Less than 0.01 % at rated output
Less than 0.008% at 10 W output

Intermodulation (IM) Distortion: (60 Hz : 7 kHz = 4 : 1)
Less than 0.01 % at rated output
Less than 0.008 % at 10 W output

– Continued on next page –

SONY®
SERVICE MANUAL

www.hifiengine.com

Residual Noise: Less than 150 μV (8 Ω, network A)

Damping Factor: 40 (8 Ω, 1 kHz)

Outputs: SPEAKER terminals A, B
Accept speakers of 8 – 16 Ω
HEADPHONES jack
Accepts low and high-impedance stereo headphones

PREAMPLIFIER SECTION

Frequency Response: PHONO: RIAA equalization curve ±0.2 dB
TUNER, AUX, TAPE 1, 2: 3 – 70,000 Hz $^{+0}_{-1}$ dB

Tone Controls: BASS
±10 dB at 60 Hz
(turnover frequency 300 Hz)
TREBLE
±10 dB at 25 kHz
(turnover frequency 5 kHz)

Filters: LOW
6 dB/octave attenuation below 15 Hz

Loudness: (att. 30 dB) +10 dB at 60 Hz, +6 dB at 25 kHz

Inputs:

	Sensitivity	Impedance	Phono overload (1 kHz)	S/N (weighting network, input level)
PHONO (MC)	0.25 mV (–70 dB)	100 Ω	25 mV (–30 dB)	75 dB (A, 0.25 mV)
PHONO 2 (MM)	2.5 mV (–50 dB)	50 kΩ	250 mV (–10 dB)	88 dB (A, 2.5 mV)
TUNER AUX TAPE 1, 2	150 mV (–14.5 dB)	50 kΩ	———	100 dB (A, 150 mV)

Outputs:

	Voltage	Impedance
REC OUT 1, 2	150 mV (–14.5 dB) (13.5 V at max.)	4.7 kΩ

0 dB = 0.775 V

MODEL IDENTIFICATION

– Specification Label –

US model

SONY® INTEGRATED STEREO AMPLIFIER
Model NO. TA-F60
AC 120 V 60 Hz 120 W
SERIAL NO.
MADE IN JAPAN

UK model

SONY® INTEGRATED STEREO AMPLIFIER
Model NO. TA-F60
AC 240 V ~ 50/60 Hz 420 W
SERIAL NO.
MADE IN JAPAN

Canadian model

SONY® INTEGRATED STEREO AMPLIFIER
Model NO. TA-F60
AC 120 V 60 Hz 190 W
SERIAL NO.
MADE IN JAPAN

PX1 model

SONY® INTEGRATED STEREO AMPLIFIER
Model NO. TA-F60
AC110, 120, 220, 240 V ~ 50/60 Hz 310 W
SERIAL NO.
MADE IN JAPAN

AEP model

SONY® INTEGRATED STEREO AMPLIFIER
Model NO. TA-F60
AC 220 V ~ 50/60 Hz 310 W
SERIAL NO.
MADE IN JAPAN

PX2 model

ASCO
SONY® INTEGRATED STEREO AMPLIFIER
Model NO. TA-F60
AC110, 120, 220, 240 V ~ 50/60 Hz 310 W
SERIAL NO.
MADE IN JAPAN

www.hifiengine.com

SERVICING NOTE

1. PULSE POWER SUPPLY BOARD REPAIRING

This set has a pulse power-supply circuit which is quite different from a conventional power-supply circuit. The pulse power supply directly retifies and smooths the ac input power to produce the higher dc voltages required in the power supply circuit. When servicing this set, note the following.

a) To prevent unwanted radiation due to pulse signals in the pulse power-supply circuit, the pulse power-supply board is shielded by the aluminum diecast box.

b) The negative circuit of the secondary rectifier in the pulse power-supply circuit is grounded by screws in the aluminum diecast box. When checking the pulse power-supply board out of the box, use a jumperwire and a cardboard insulator as shown on the right.

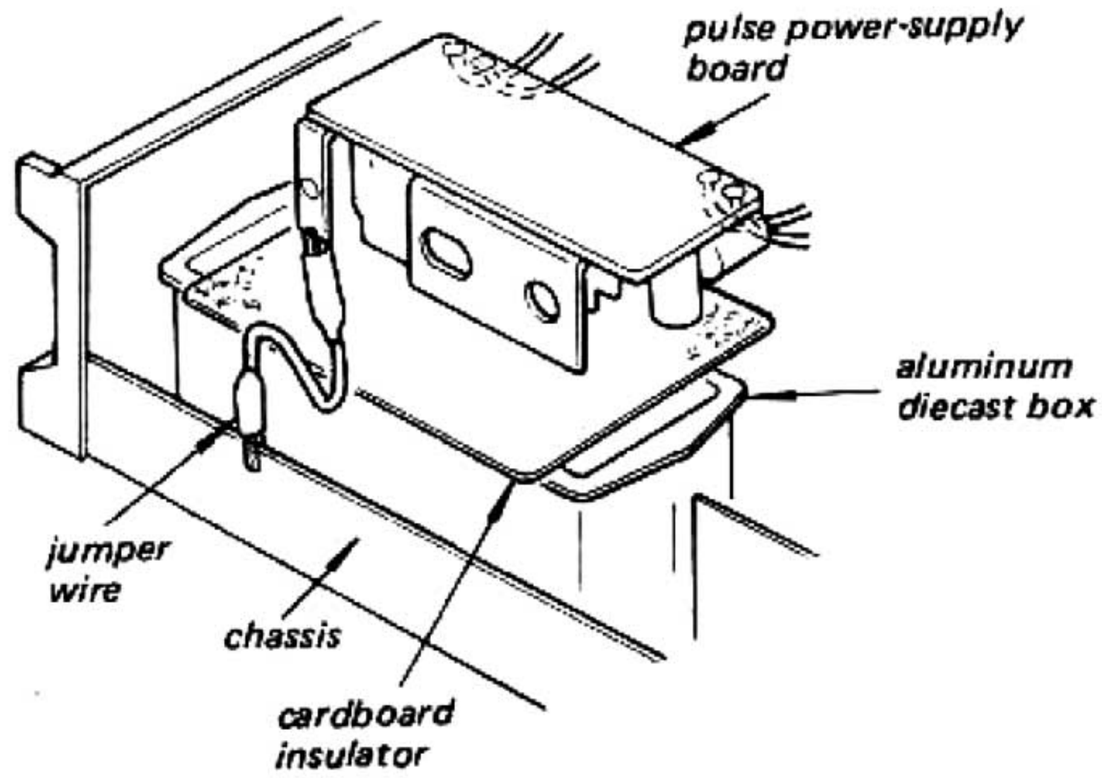

2. Take care that electrolytic capacitor C414 which is used after the rectification of ac power soure voltage is charged even if the POWER switch is turned off. Be sure to use a resistor of at least several hundred ohms to discharge the capacitor. Direct discharge by means of lead is dangerous.

3. INVERTER CIRCUIT TRANSISTOR REPLACEMENT (Q903–906)

When replacing Q903–Q906 in the pulse power-supply circuit, use those which have the same hFE rank and color code.

US, Canadian model

Q903–906 2SC1968D-O - - - O

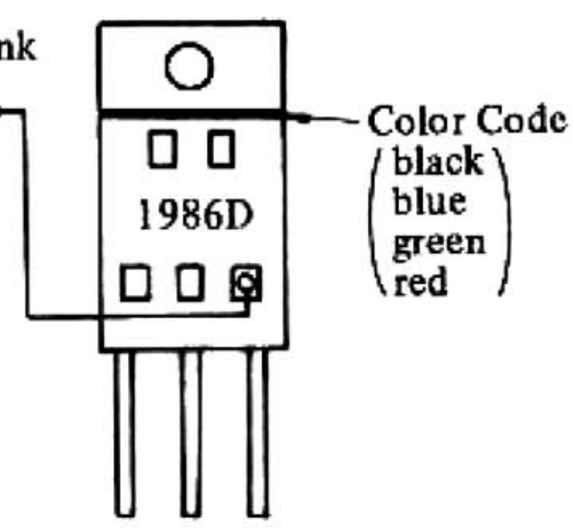

AEP, UK, PX model

Q903, 904 MN8301C - - - O

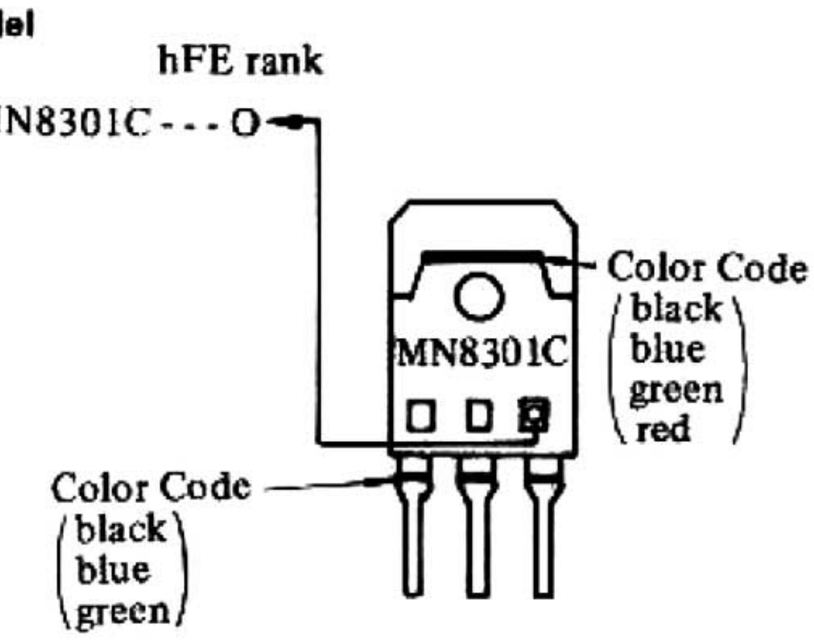

www.hifiengine.com

MEMO

www.hifiengine.com

SECTION 1
OUTLINE

1-1. HEAT PIPE

Model TA-F60 uses a heat pipe as the heat conduction element for dissipating the heat generated by the power transistors. The principle and construction of the heat pipe are described below.

The heat pipe is a conduction element of superior thermal conduction characteristics designed for disposing of the heat in connection with spacecraft and aircraft. It is composed of special fluid enclosed in an airtight container, which has a reduced internal pressure.

The operation principle of the heat pipe is illustrated in Fig. 1. One end of the pipe is the heat input section (evaporation section), and the other end is the heat output section (condensation section). As heat is applied to the heat input section, the fluid in that seciton is evaporated and conveyed to the heat output section. Since it radiates heat, the vapor in the heat output section condenses, restores the state of fluid and returns to the heat input section. The cycle of the above processes is performed continuously. As a result, heat conduction is possible at a very high velocity.

The apparent thermal conductivity of the heat pipe used as the conduction element for the heat dissipation of power transistor is several hundred times as high as that of the aluminum or copper conventionally used as the material of heat sink. For this reason, a heat pipe has a cooling capacity 50 % higher than a heat sink. Use of the heat pipe also permits the power transistor to be cooled without detaching it from the circuit board, and as the result, the electromagnetic waves generated by the large signal current flowing in the leads are much decreased, and the distortion factor characteristic and signal-to-noise ratio of the power amplifier are improved.

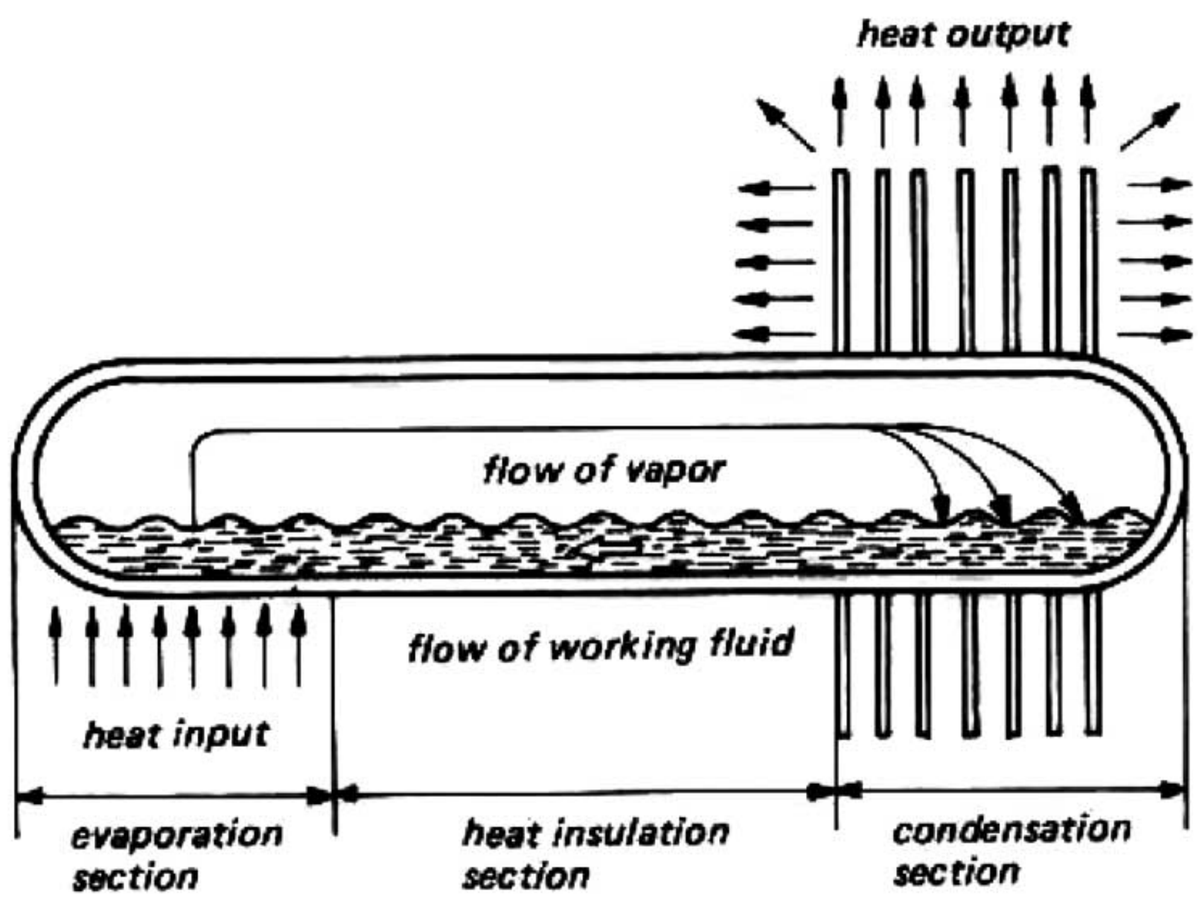

Fig. 1

1-2. LED PEAK LEVEL METER CIRCUIT

For indication of the output power, Model TA-F60 uses light-emitting diodes (LED). This LED peak level meter is described below.

(1) When the power switch is turned on, LED D111-1 (0 W) is lit.

(2) The input signal is logarithmically compressed by operational amplifier IC103 according to the square-law characteristic of diodes D108 and D109.

(3) The logarithmically compressed input signal is rectified by D110 and charges C169 for peak detection.

(4) The anode voltage of diode D310 as divided by means of R316, R317 and R318 is applied as a reference voltage to the terminals (3) and (20) of IC104.

(5) The reference voltage is divided into 12 parts by means of R1 to R13 in IC104, and the 12 divisional voltages are applied as the reference voltages for the LED-driving differential amplifiers, respectively.

(6) If there is an input signal of, for example, 0.005 W in output power, the voltage to which C169 is charged with the logarithmically compressed and rectified input signal is applied to the terminal (21) of IC104, making the base voltage of Q2 higher than the base voltage (reference voltage) of Q1. This causes the collector voltage of Q2 to decrease. Then, the LED driving circuit turns on to light LED D111-2 (0.005 W). The other LEDs D111-3, D111-4, ... are not lit because the base voltages (reference voltages) of Q3, Q5, ... are higher than the base voltages of Q4, Q6, . . . , respectively.

(7) As in the foregoing, the peak level voltage charged in C169 is compared with the reference voltage in each LED-driving differential amplifier, and if the peak level voltage becomes higher than the reference voltage, the corresponding LED (D111-2 to D111-13) is lit to indicate the output power of Model TA-F60.

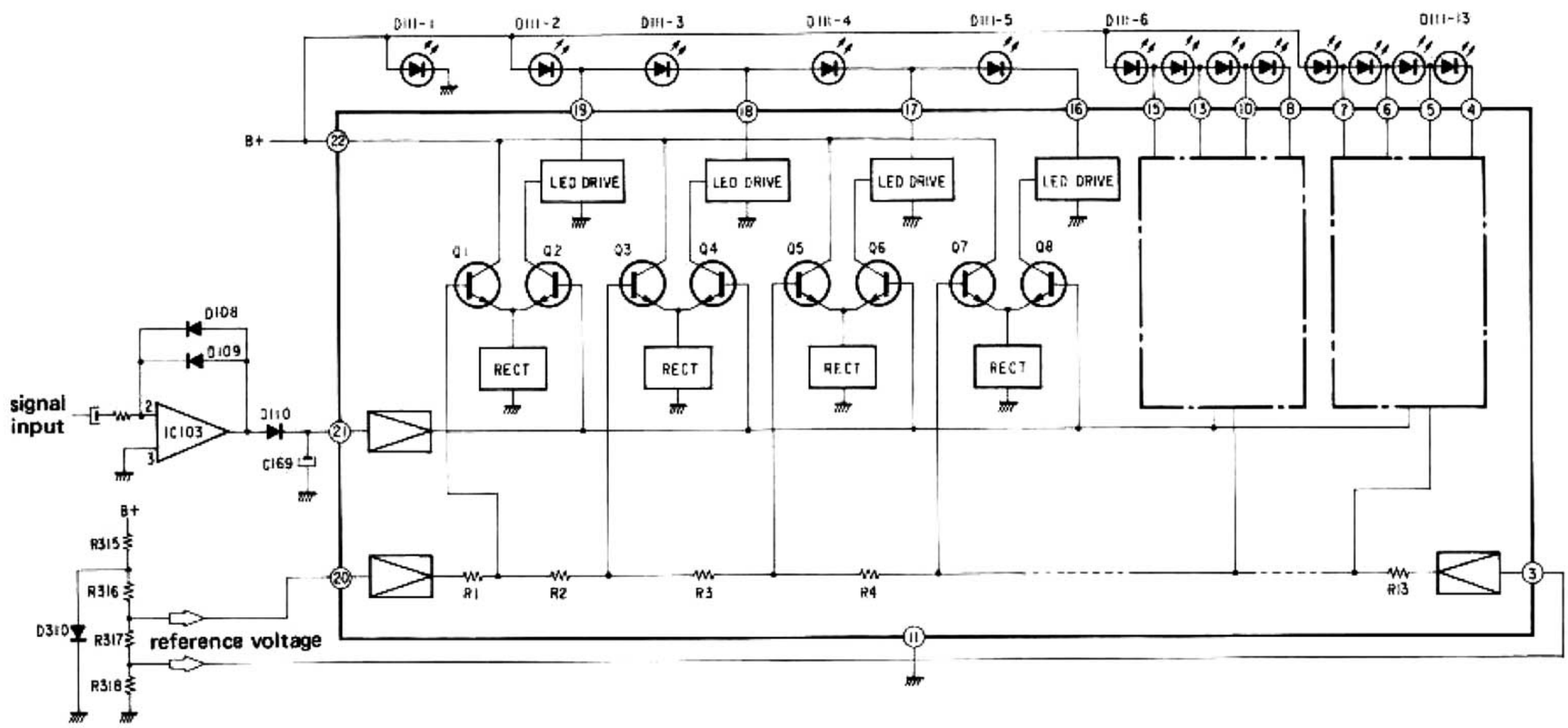

Fig. 2

www.hifiengine.com

1-3. BLOCK DIAGRAM

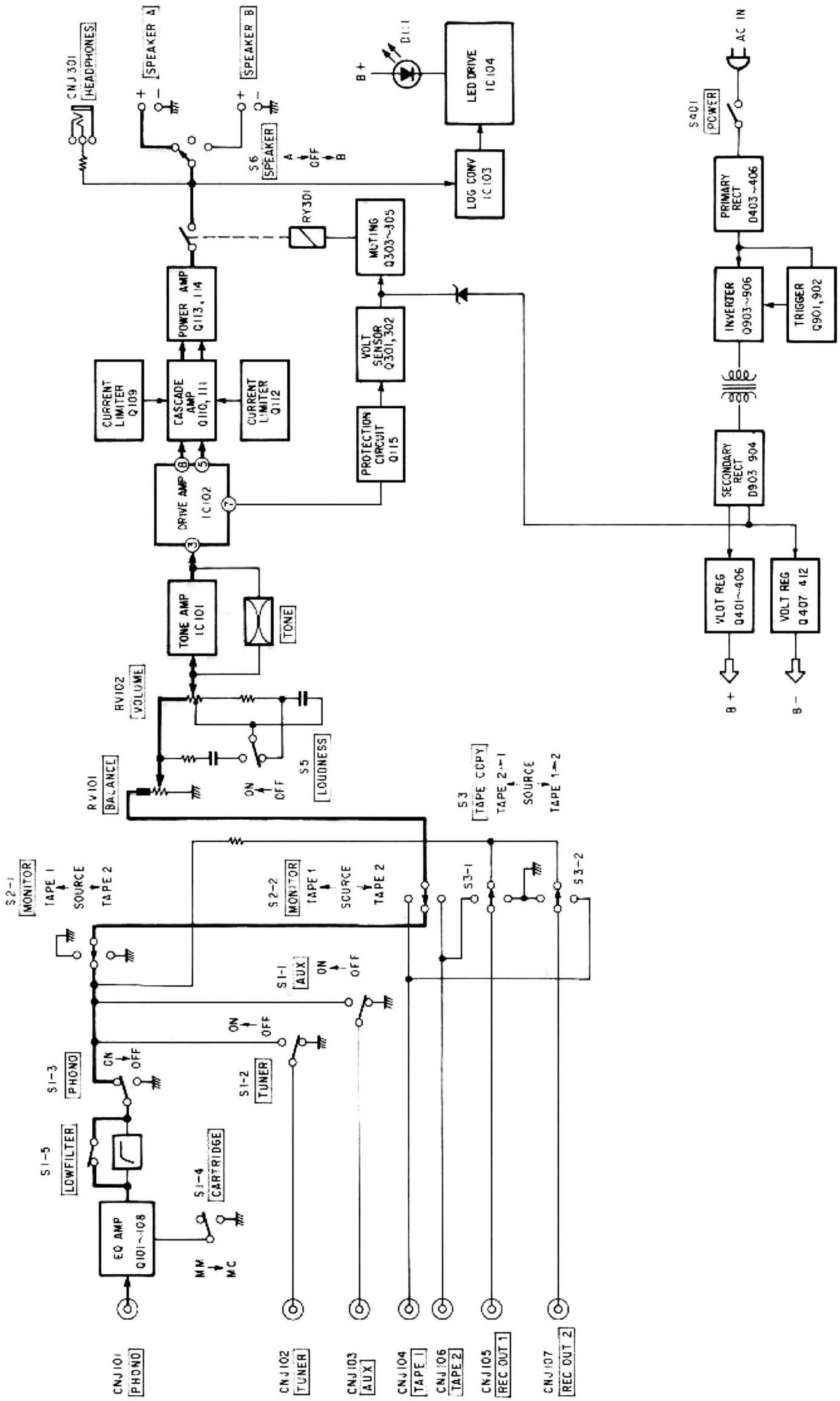

SECTION 2
DISASSEMBLY

Note: Follow the disassembly procedure in the numerical order given.

Top Cover and Front Panel

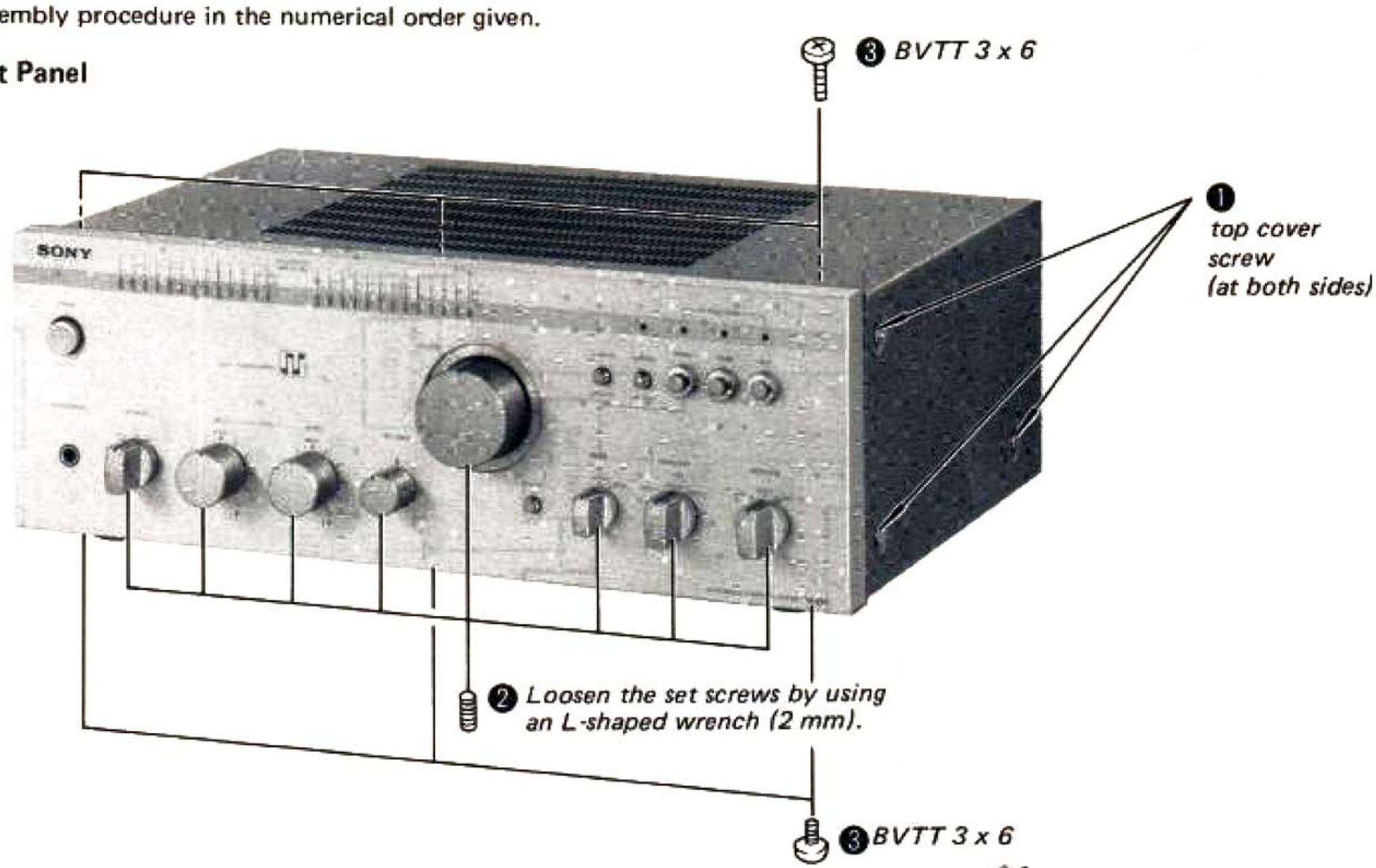

Circuit Board Check

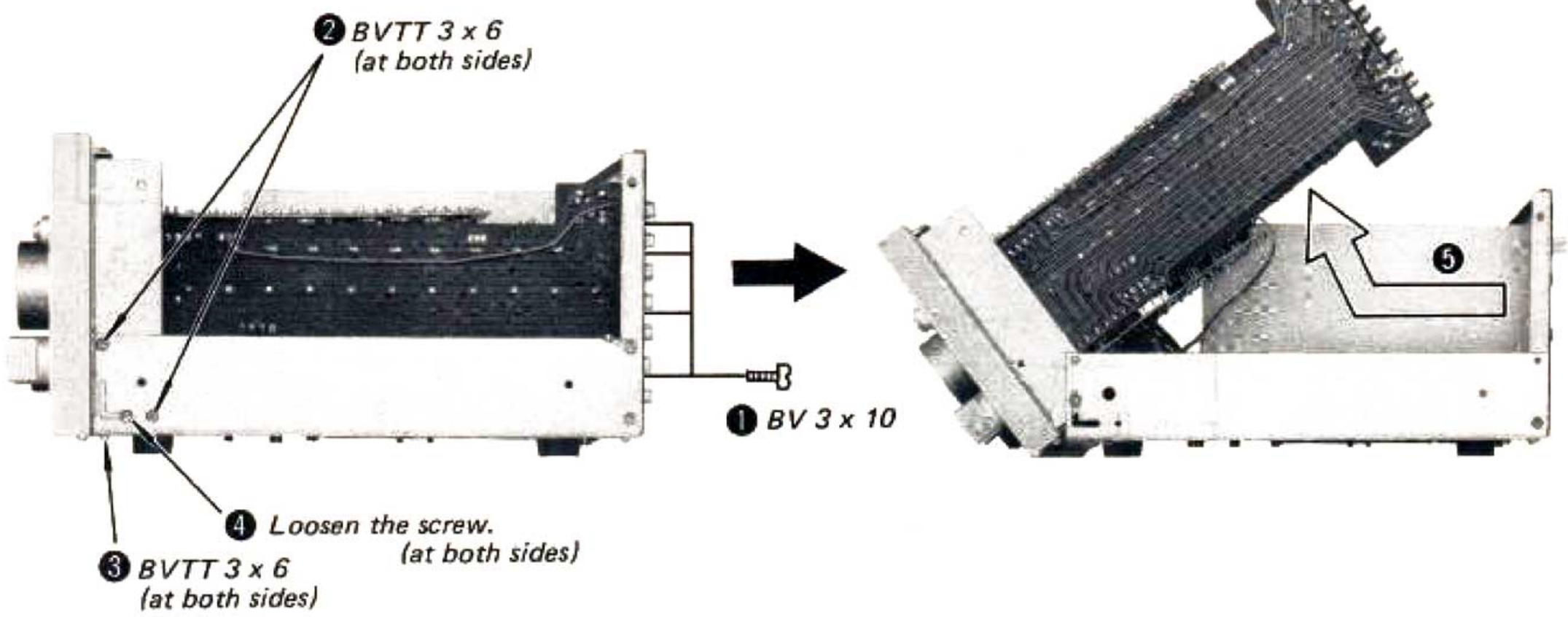

Power Amp Board

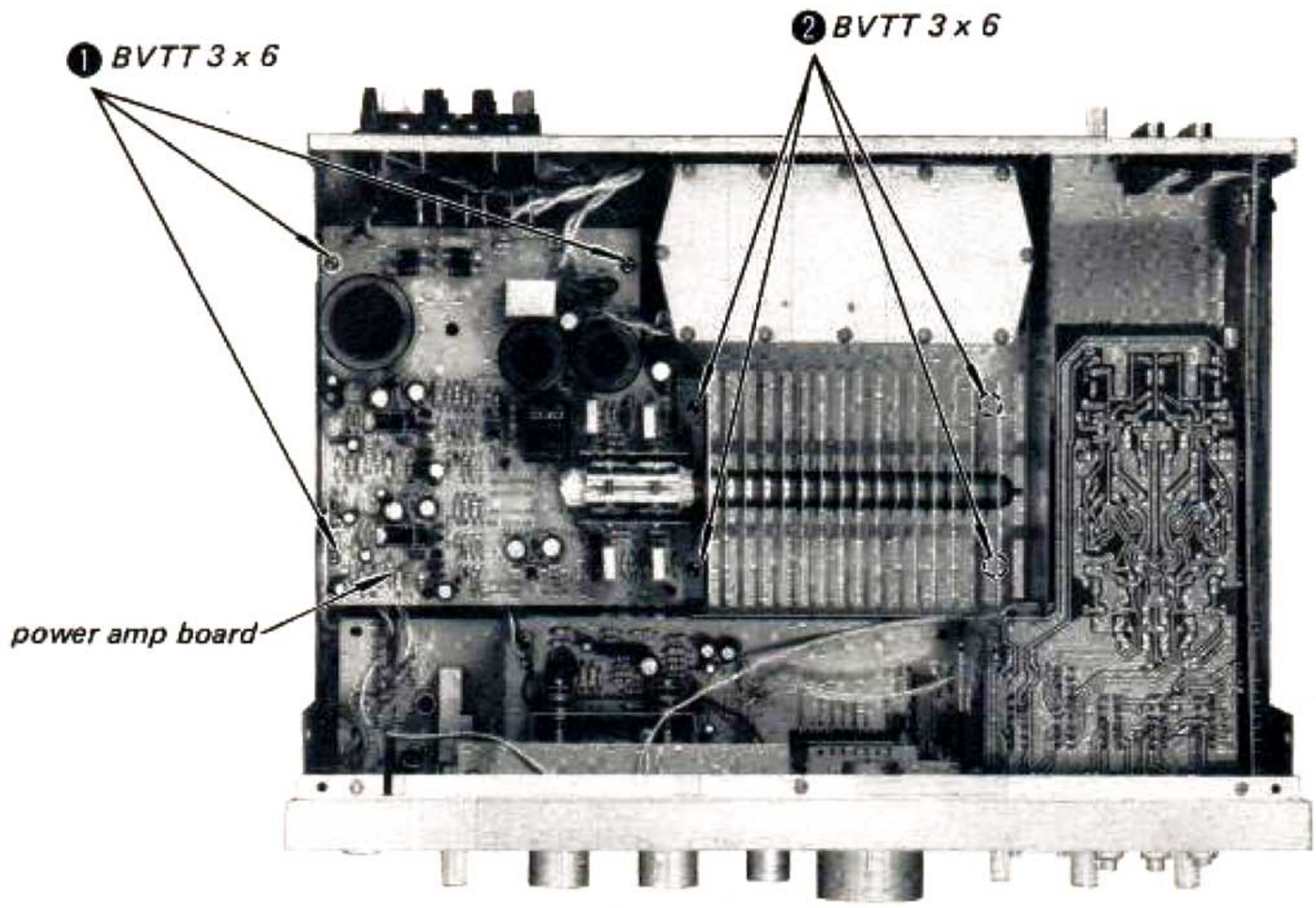

SECTION 3
ADJUSTMENTS

Note:

1. DC BIAS and DC BALANCE adjustments should be made serveral minutes later after the POWER switch is turned on (POWER ON.).
2. Make DC BIAS adjustment first.
3. Repeat DC BIAS and DC BALANCE adjustments two or three times.
4. After replacing the power transistors, DC BIAS and DC BALANCE adjustments should be made.

DC Bias Adjustment

Procedure:

Adjust RT102 (L-CH) and RT202 (R-CH) for 22 mV readings with no signal input.

Adjustment Location:

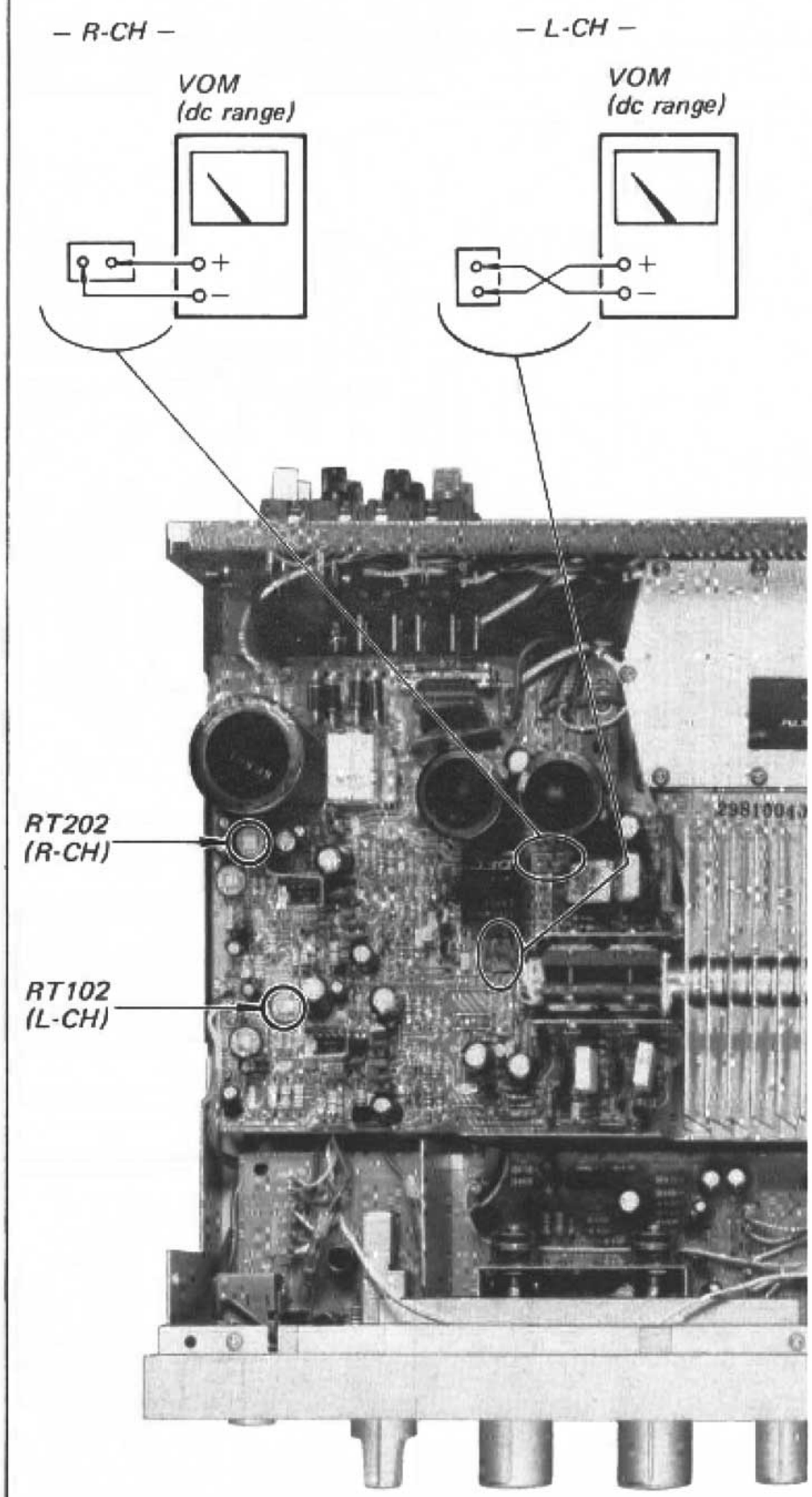

DC Balance Adjustment

Procedure:

Adjust RT101 (L-CH) and RT201 (R-CH) for 0 V readings with no signal input.

Adjustment Location:

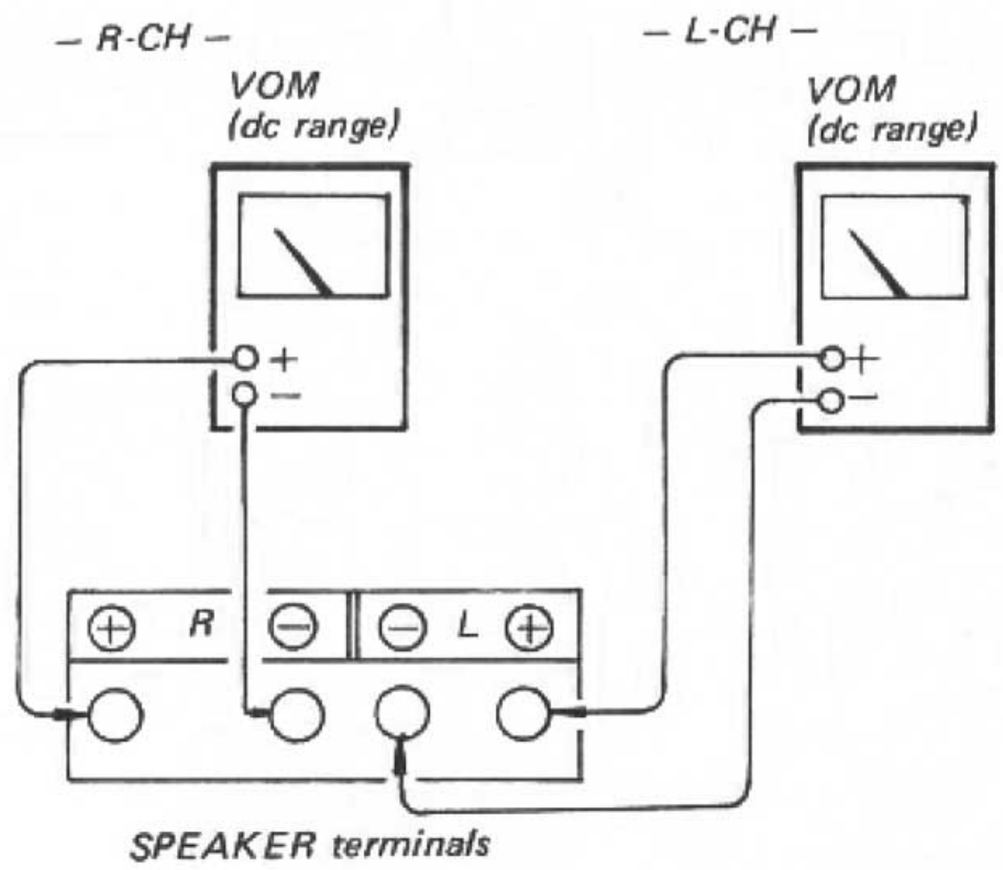

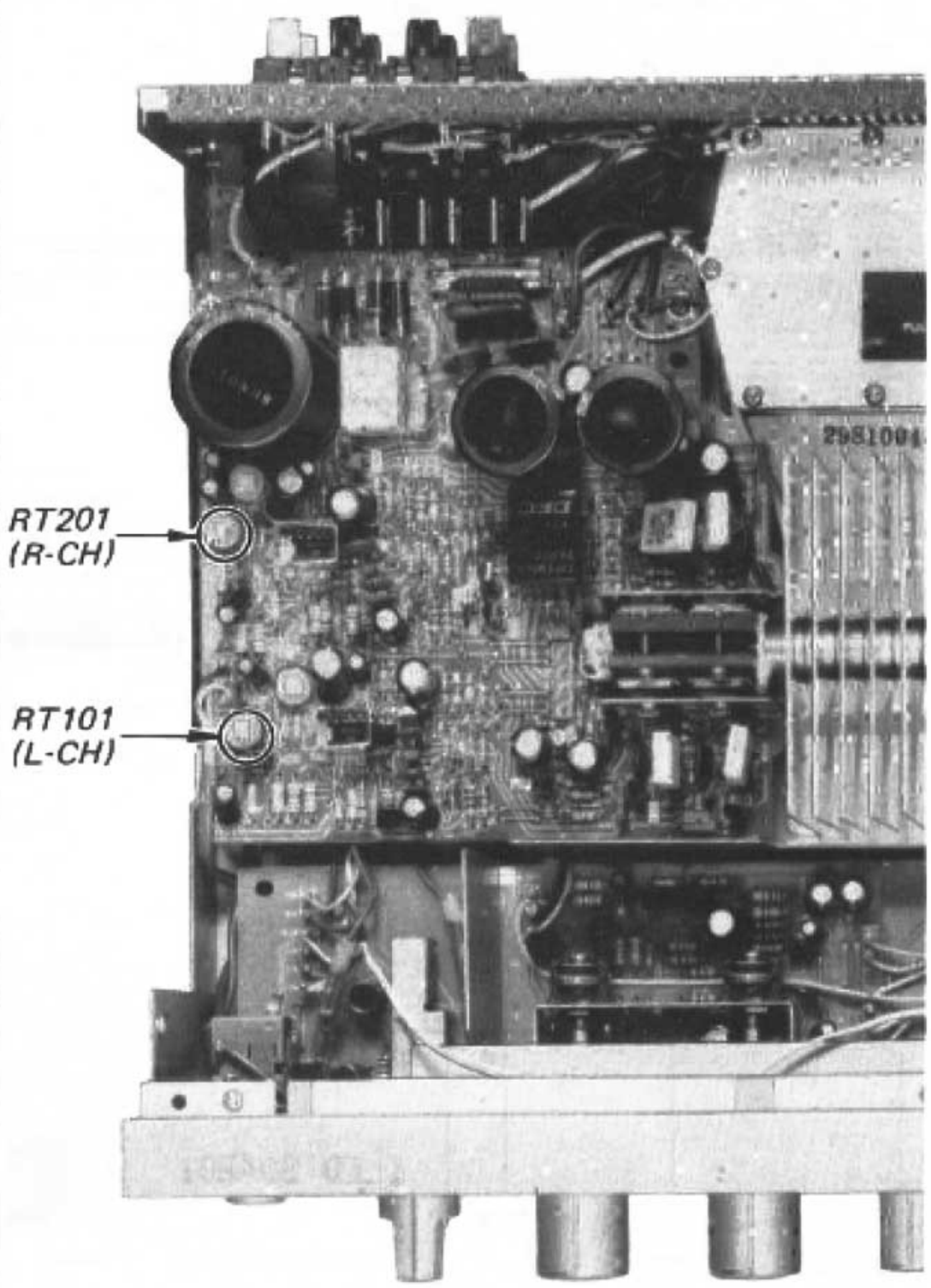

Meter Level Adjustment

Setting:

FUNCTION switch: TUNER

Procedure:

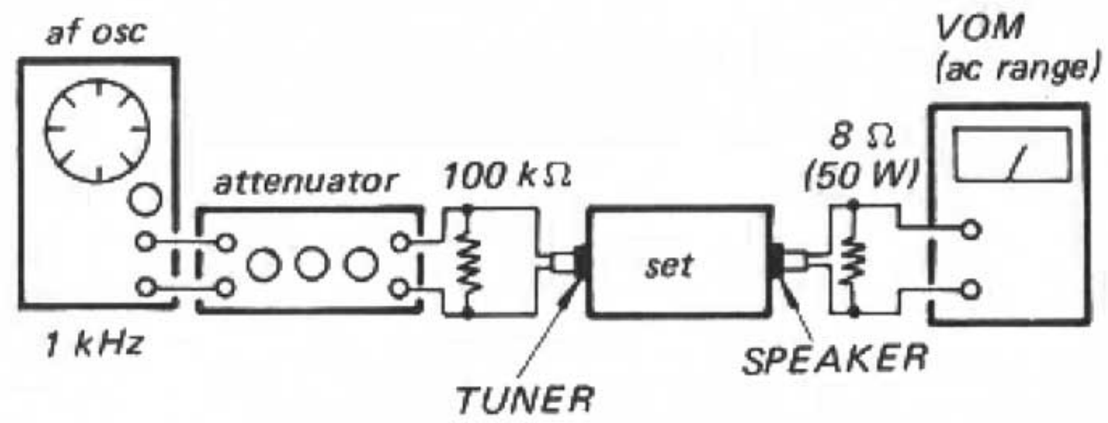

1. Turn the VOLUME control fully clockwise.
2. Adjust the attenuator so that the VOM reads 8 W (8 V).
3 Adjust RT103 (L-CH) and RT203 (R-CH) so that the 10 W indicator (3rd LED from right) begins to turn on.
4. Confirmation:
   - 30 W indicator turns on when the VOM indicates 30 W (15.5 V).
   - 0.01 W indicator turns on when the VOM indicates 0.01 W (0.283 V).

Adjustment Location:

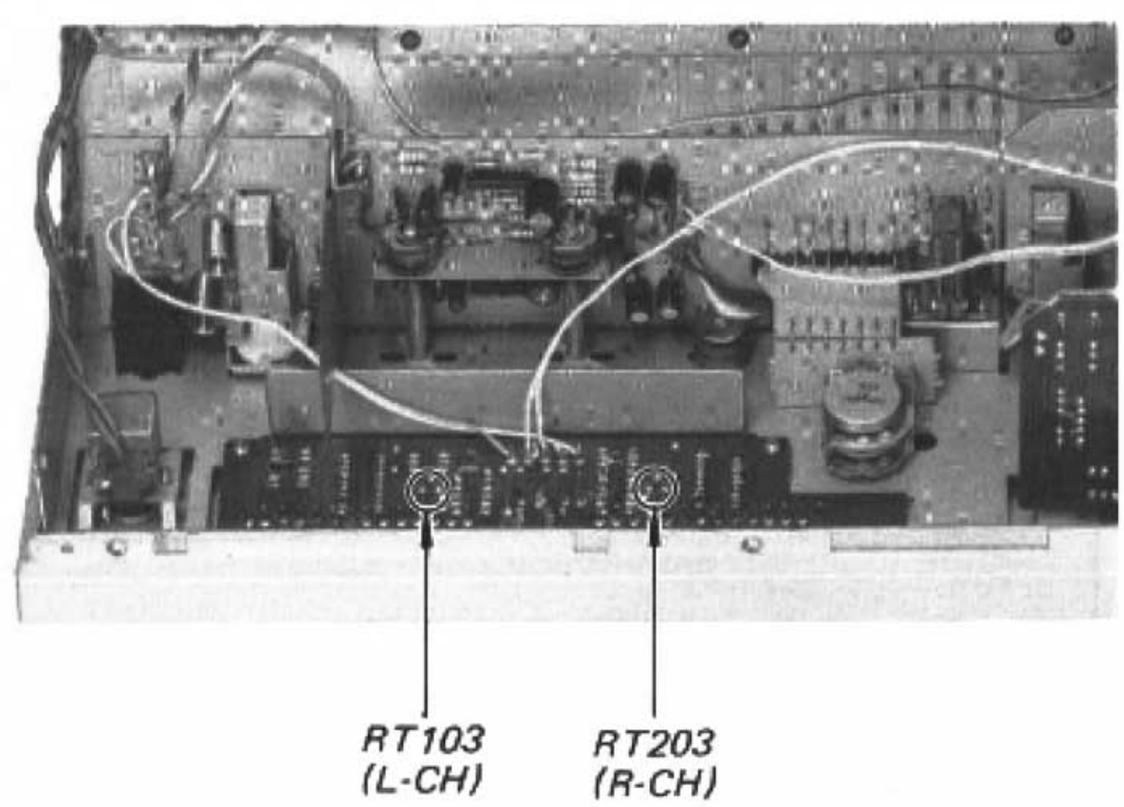

SECTION 4
DIAGRAMS

4-1. MOUNTING DIAGRAM — Power Amp Board and Power Supply Board —

— Conductor Side —

(AEP, UK model)

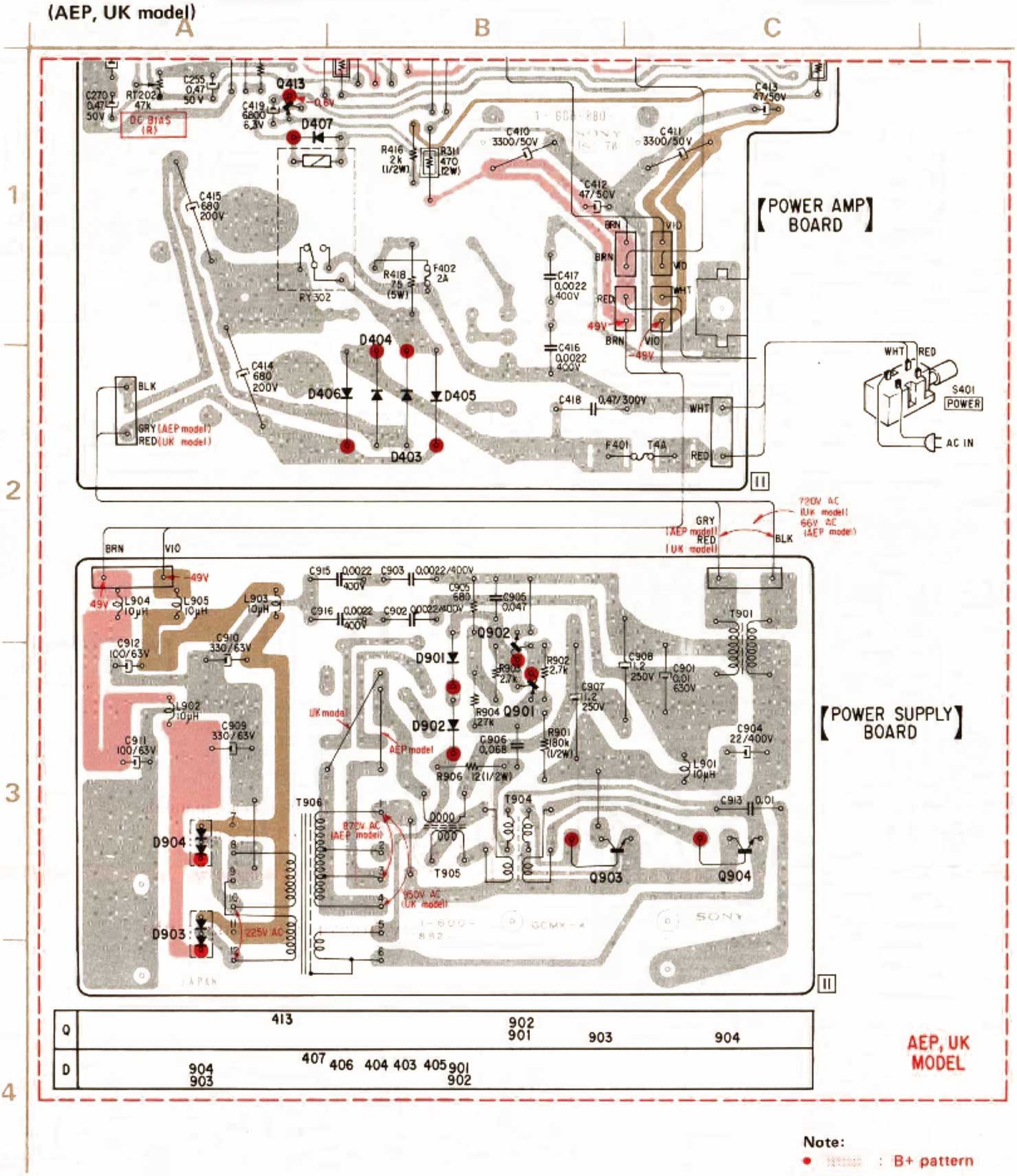

Q	413 902 901 903 904
D	904 903 407 406 404 403 405 901 902

AEP, UK MODEL

Note:

- : B+ pattern
- : B- pattern

4-2. MOUNTING DIAGRAM — Power Amp Board and Power Supply Board —

— Conductor Side —

(PX model)

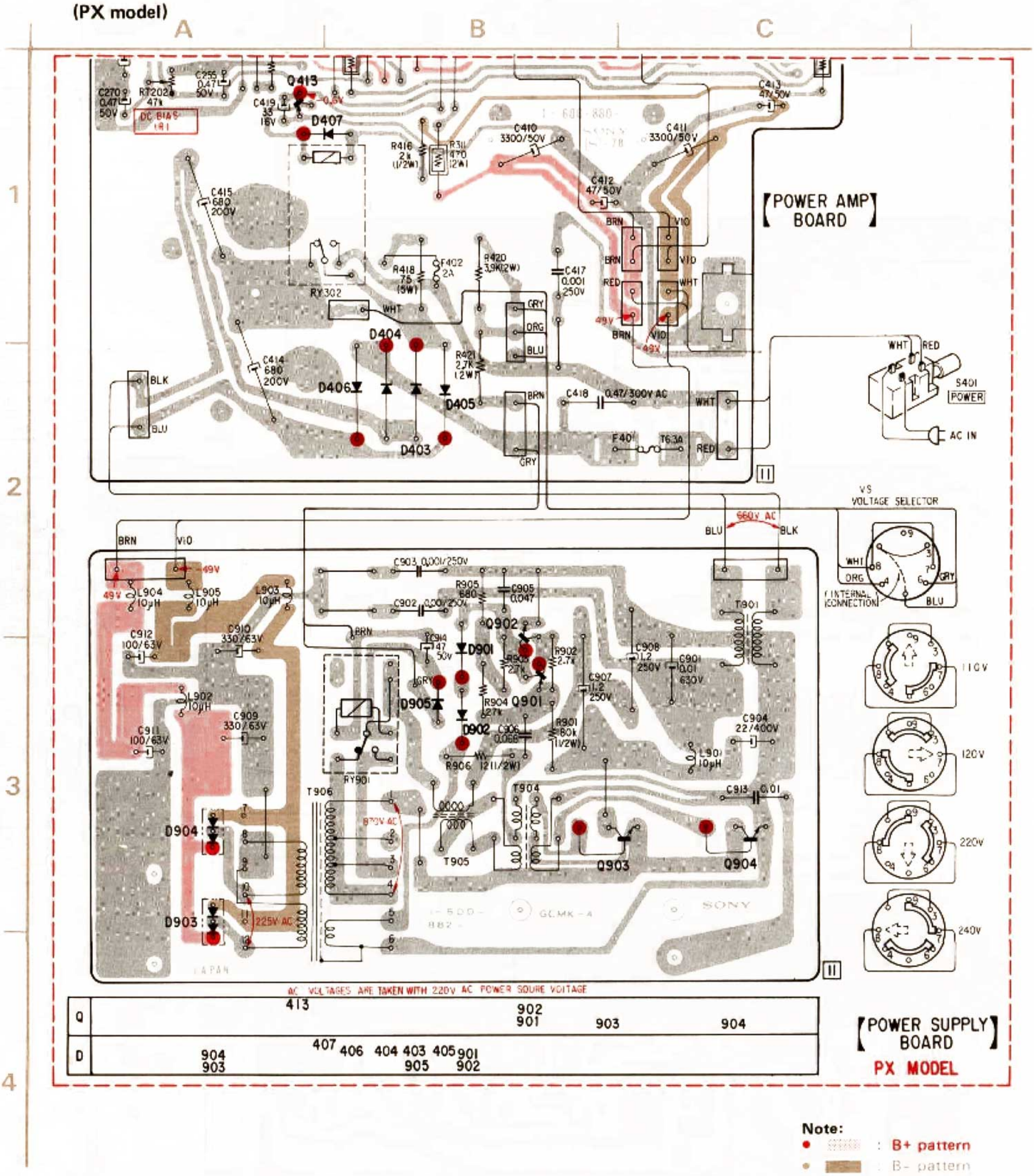

Note:

- : B+ pattern
- : B- pattern

4-3. MOUNTING DIAGRAM

— Conductor Side —

Replacement Semiconductors: See page 21.

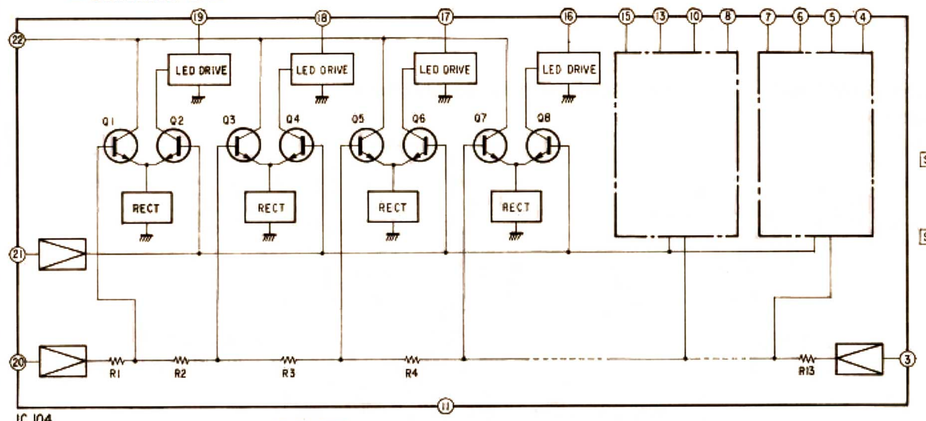

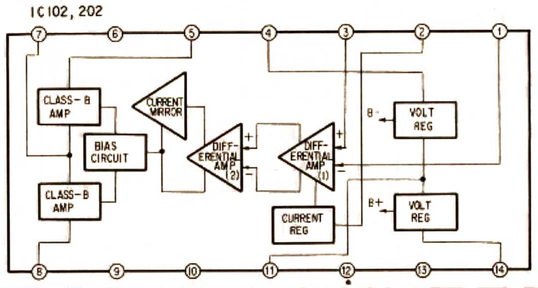

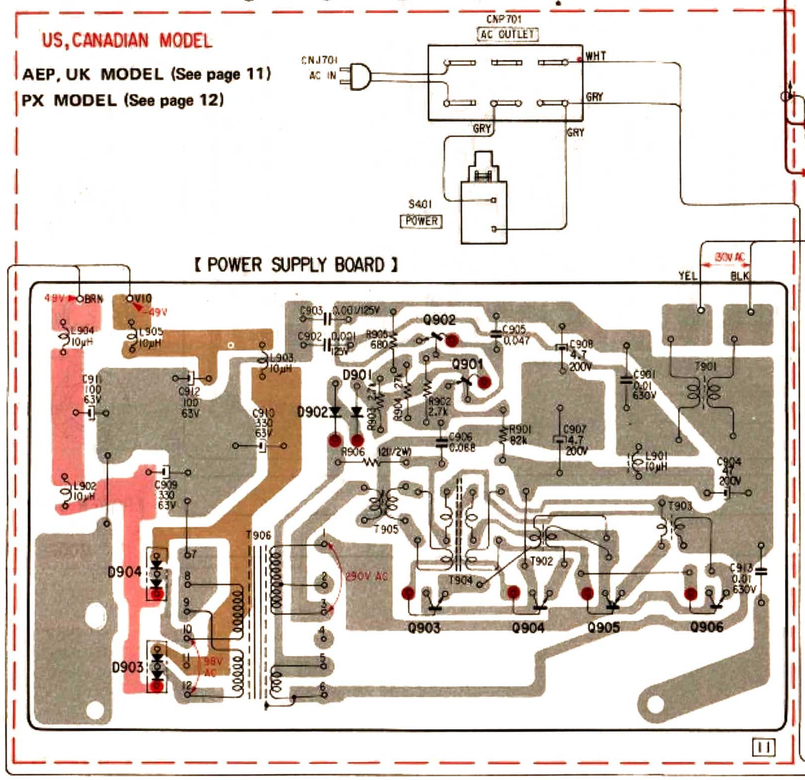

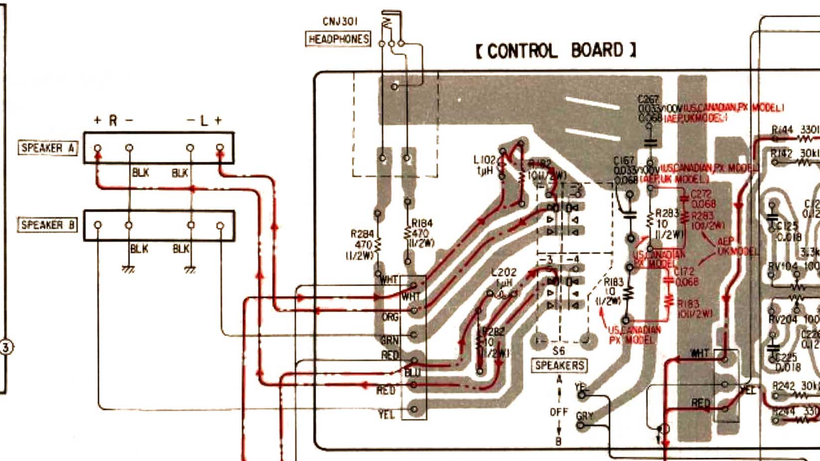

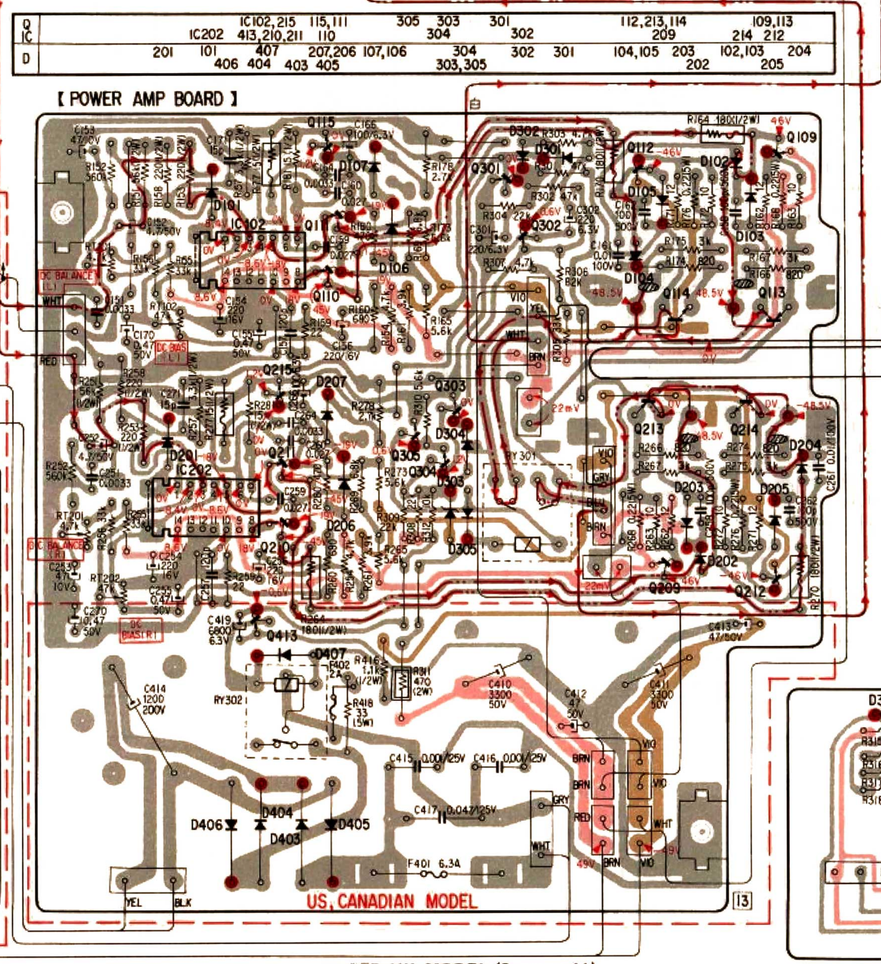

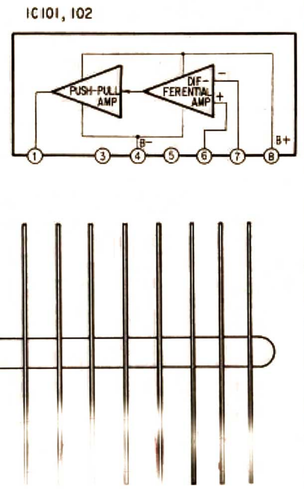

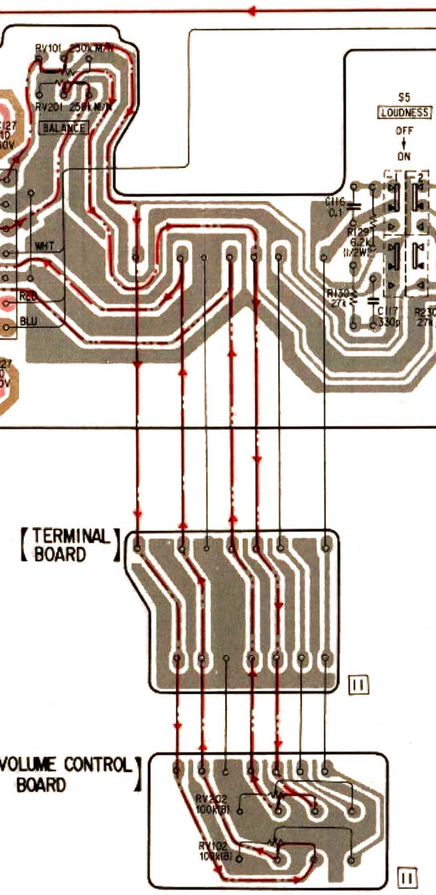

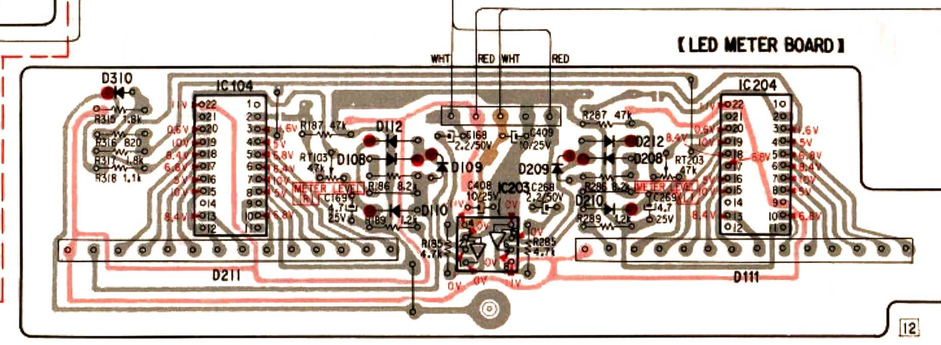

AEP, UK MODEL (See page 11)
PX MODEL (See page 12)

Q				902 901 903	904	905	906	
D	904 903		902,901					

IC		104		203			204	IC
D	310	211	112 108,110	109	209	212 208,210	111	D

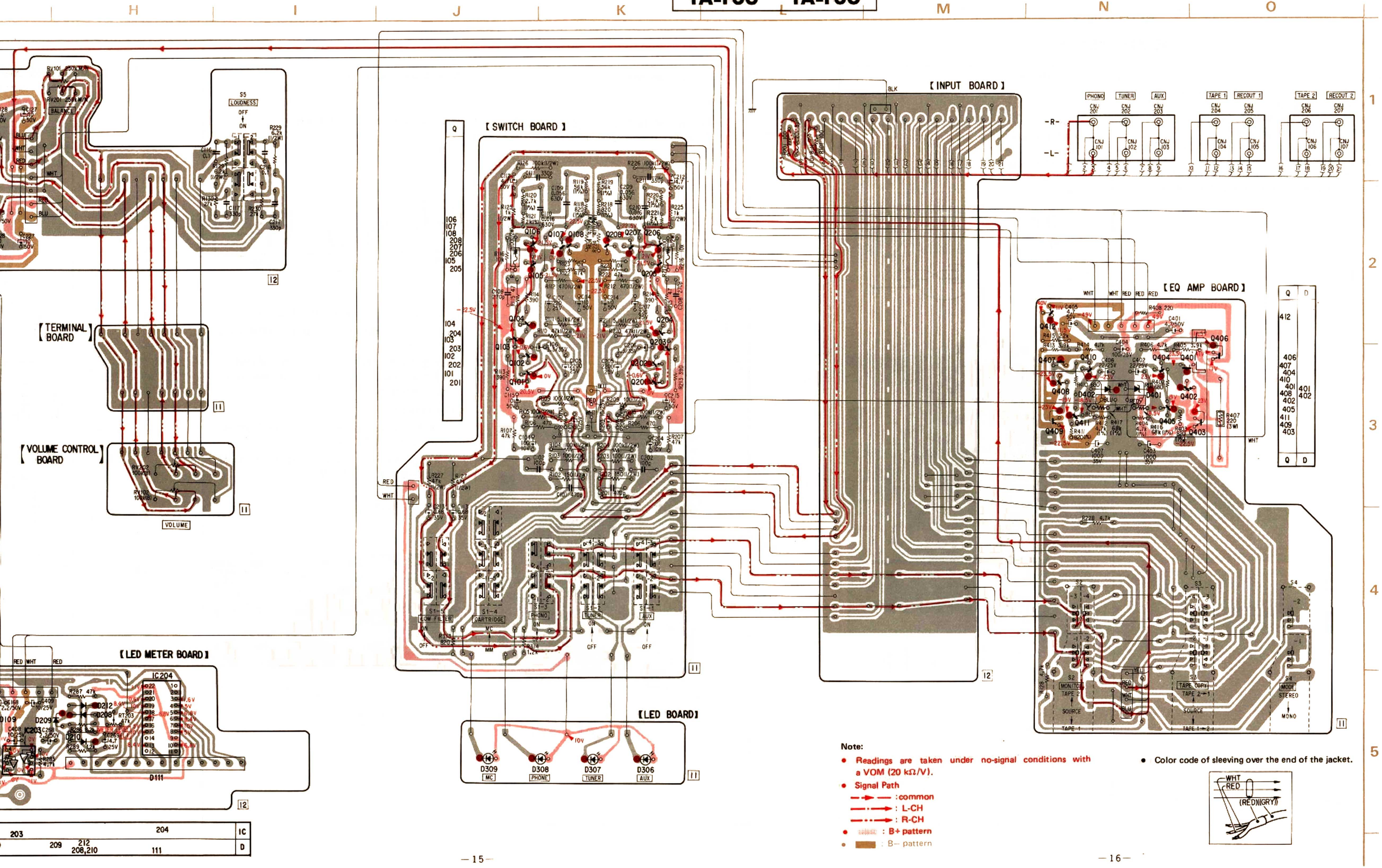

Note:

- Readings are taken under no-signal conditions with a VOM (20 kΩ/V).
- Signal Path
  - —▸— : common
  - —·▸— : L-CH
  - —··▸— : R-CH
- : B+ pattern
- : B− pattern

- Color code of sleeving over the end of the jacket.

4-4. SCHEMATIC DIAGRAM

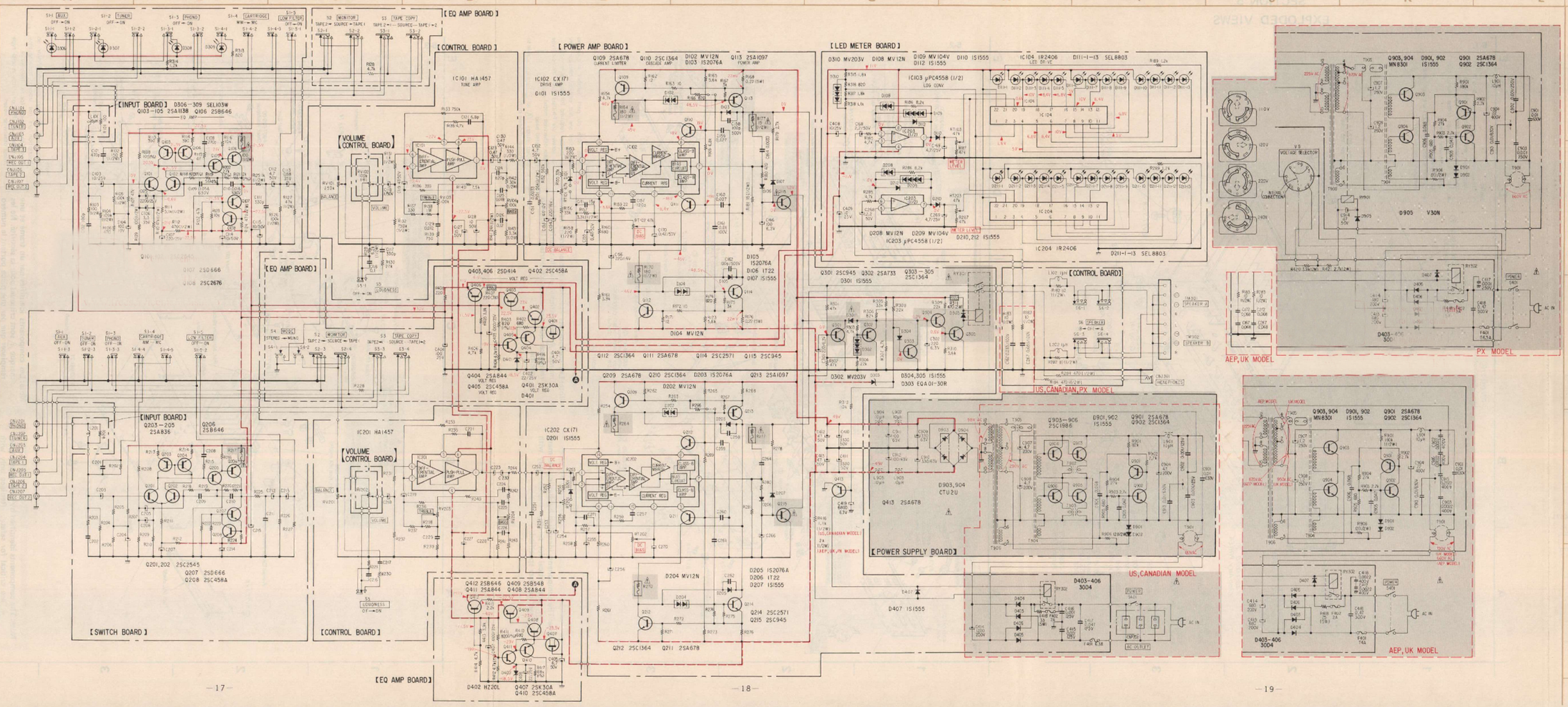

Note:

- All capacitors are in μF unless otherwise noted. pF : μμF 50WV or less are not indicated except for electrolytics and tantalum.
- All resistors are in ohms, ¼W unless otherwise noted. kΩ : 1000 Ω, MΩ : 1000 kΩ
- : nonflammable resistor.
- : fusible resistor.
- : panel designation.
- : adjustment for repair.
- Readings are taken under no-signal conditions with a VOM (20 kΩ/V).
- ——: B+ bus.
- - - -: B− bus.
- Switch

Ref. No.	Switch	Position
S1-1	AUX	OFF
S1-2	TUNER	OFF
S1-3	PHONO	ON
S1-4	CARTRIDGE	MM
S1-5	LOW FILTER	OFF
S2	MONITOR	SOURCE
S3	TAPE COPY	SOURCE
S4	MODE	STEREO
S5	LOUDNESS	OFF
S6	SPEAKERS	A

Note: The components identified by shading and mark ⚠ are critical for safety. Replace only with part number specified.

Note: Les composants identifiés par un tramé et une marque ⚠ sont critiques pour la sécurité. Ne les remplacer que par une pièce portant le numéro spécifié.

Replacement Semiconductors

For replacement, use semiconductors except in ( ).

Q101, 102, Q201, 202: 2SC2545

Q110, 210, Q112, 212, Q303–305, 902: 2SC1364

Q115, 215, Q301: 2SC1364 (2SC945)

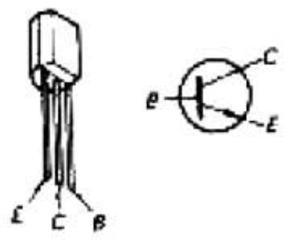

Q103–105, Q203–205: 2SA872 (2SA1138)

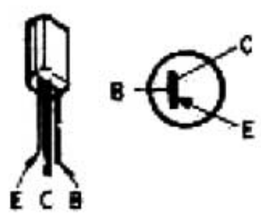

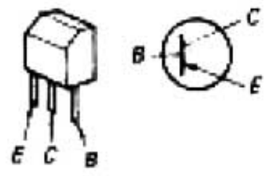

Q106, 206, 412: 2SA896 (2SB646)

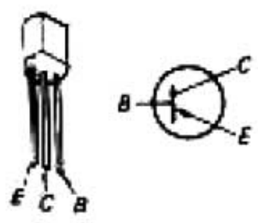

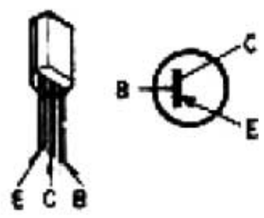

Q107, 207: 2SC1811 (2SD666)

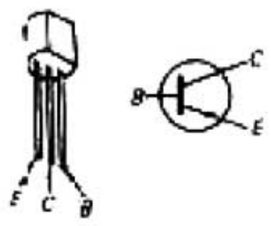

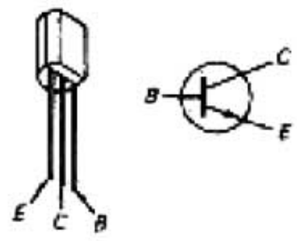

Q108, 208: 2SC1364 (2SC2676)
Q402, 405, 410: 2SC1364 (2SC458A)

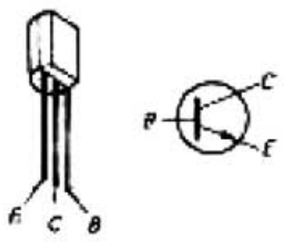

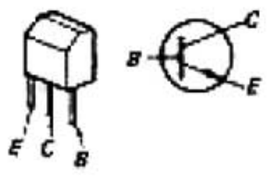

Q302: 2SA1027R (2SA733)

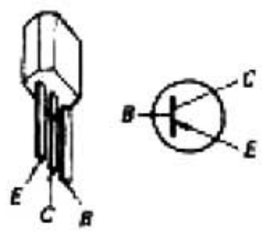

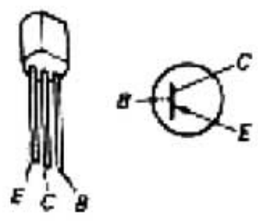

Q109, 209, Q111, 211, Q413, 901: 2SA1027R (2SA678)
Q404, 408, 411: 2SA1027R (2SA844)

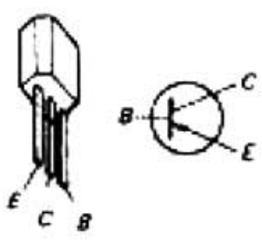

Q113, 213: 2SA1097

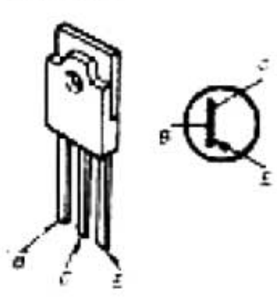

Q114, 214: 2SC2571
Q903, 904: MN8301C (AEP, UK, PX model)

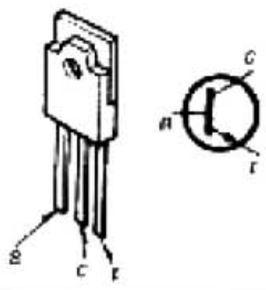

Q903–906: 2SC1986D (2SC1986) (US, Canadian model)

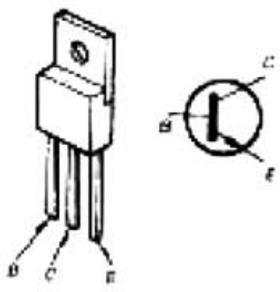

Q401, 407: 2SK30A

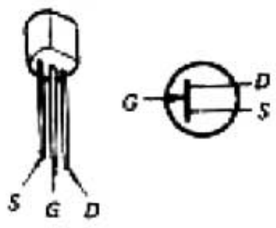

Q403, 406: 2SD414

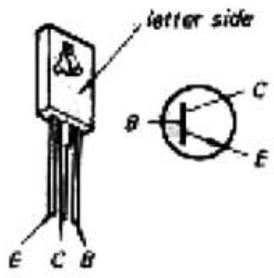

Q409: 2SB548

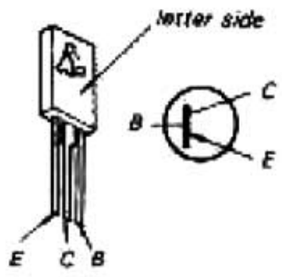

D101, 107, 110, 112, D201, 207, 210, 212, D301, 304, 305, D407, 901, 902: 1S1555

D103, 203, D105, 205: 1S2076A

D106, 206: 1T22AM (1T22)

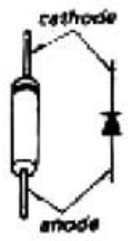

D102, 202, D104, 204, D108, 208: MV12N

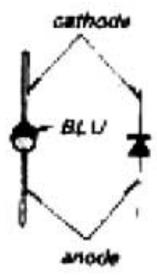

D109, 209: MV104V

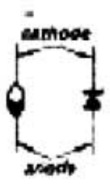

D111, 211: SEL8803

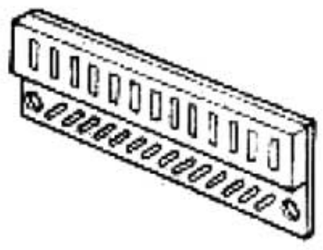

D302, 310: MV203V

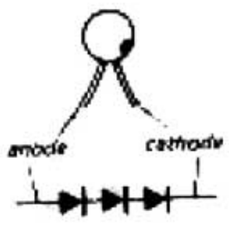

D303: EQB01-30 (EQA01-30R)
D401, 402: EQB01-20 (HZ20L)

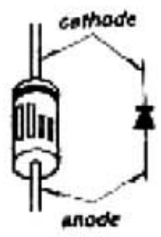

D306–309: SEL103W

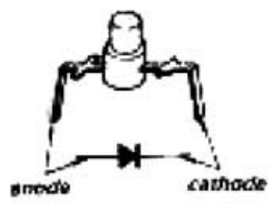

D403–406: U05G (30D4)

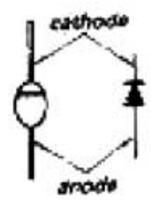

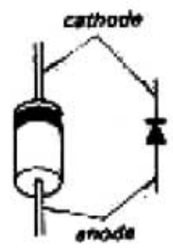

D903, 904: CTU22U (CTU2U)

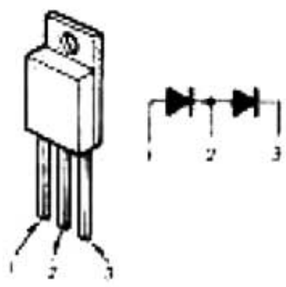

D905: V30N (PX model)

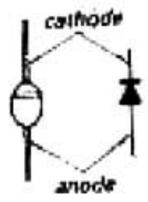

IC101, 201: HA1457

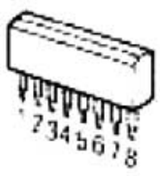

IC102, 202: CX171

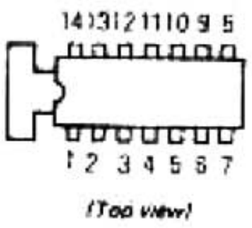

IC103, 203: μPC4558C (μPC4558)

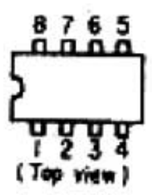

IC104, 204: 1R2406

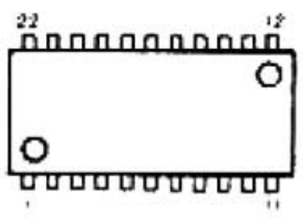

www.hifiengine.com

SECTION 5
EXPLODED VIEWS

5-1.

Note:

- Items with no part number and/or no description are not stocked because they are seldom required for routine service.
- All screws are Phillips (cross recess) type unless otherwise noted.
  (–) = slotted head
- Circled letters (Ⓐ to Ⓩ) are applicable to European models only.

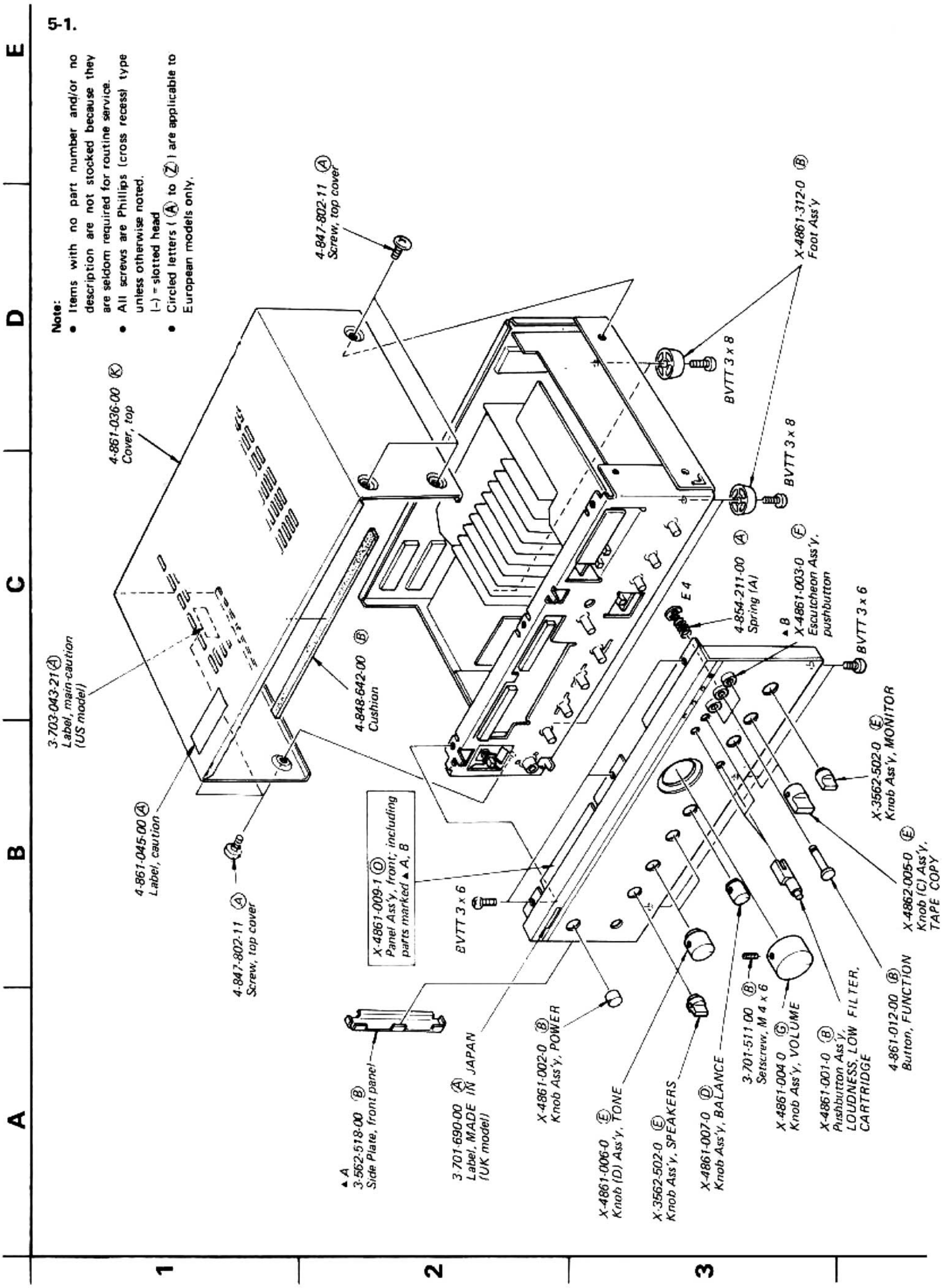

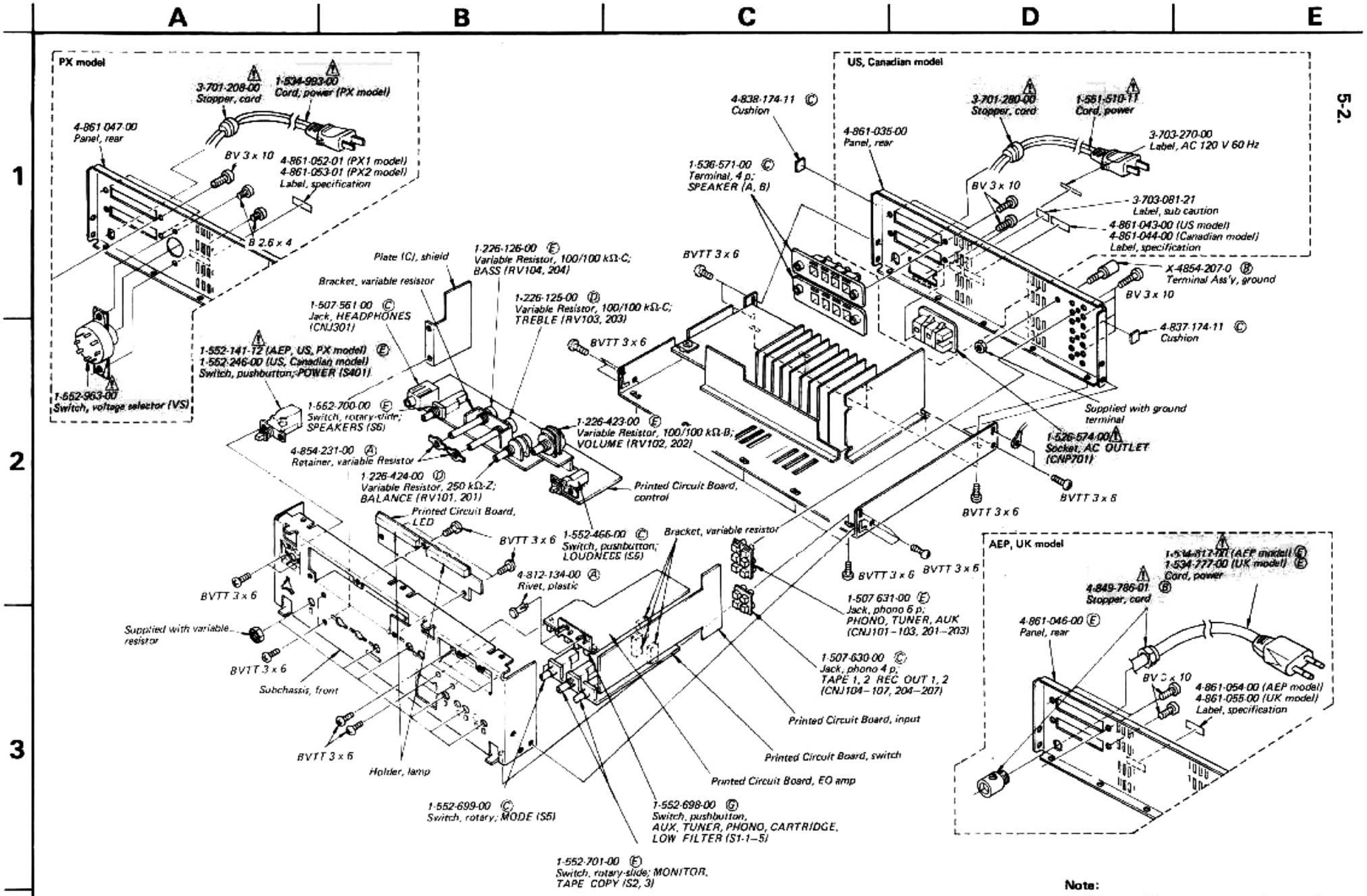

Note: The components identified by shading and mark ⚠ are critical for safety. Replace only with part number specified.

Note: Les composants identifiés par un tramé et une marque ⚠ sont critiques pour la sécurité. Ne les remplacer que par une pièce portant le numéro spécifié.

Note:

- Items with no part number and/or no description are not stocked because they are seldom required for routine service.
- All screws are Phillips (cross recess) type unless otherwise noted.
  (–) – slotted head
- Circled letters (Ⓐ to Ⓩ) are applicable to European models only.

www.hifiengine.com

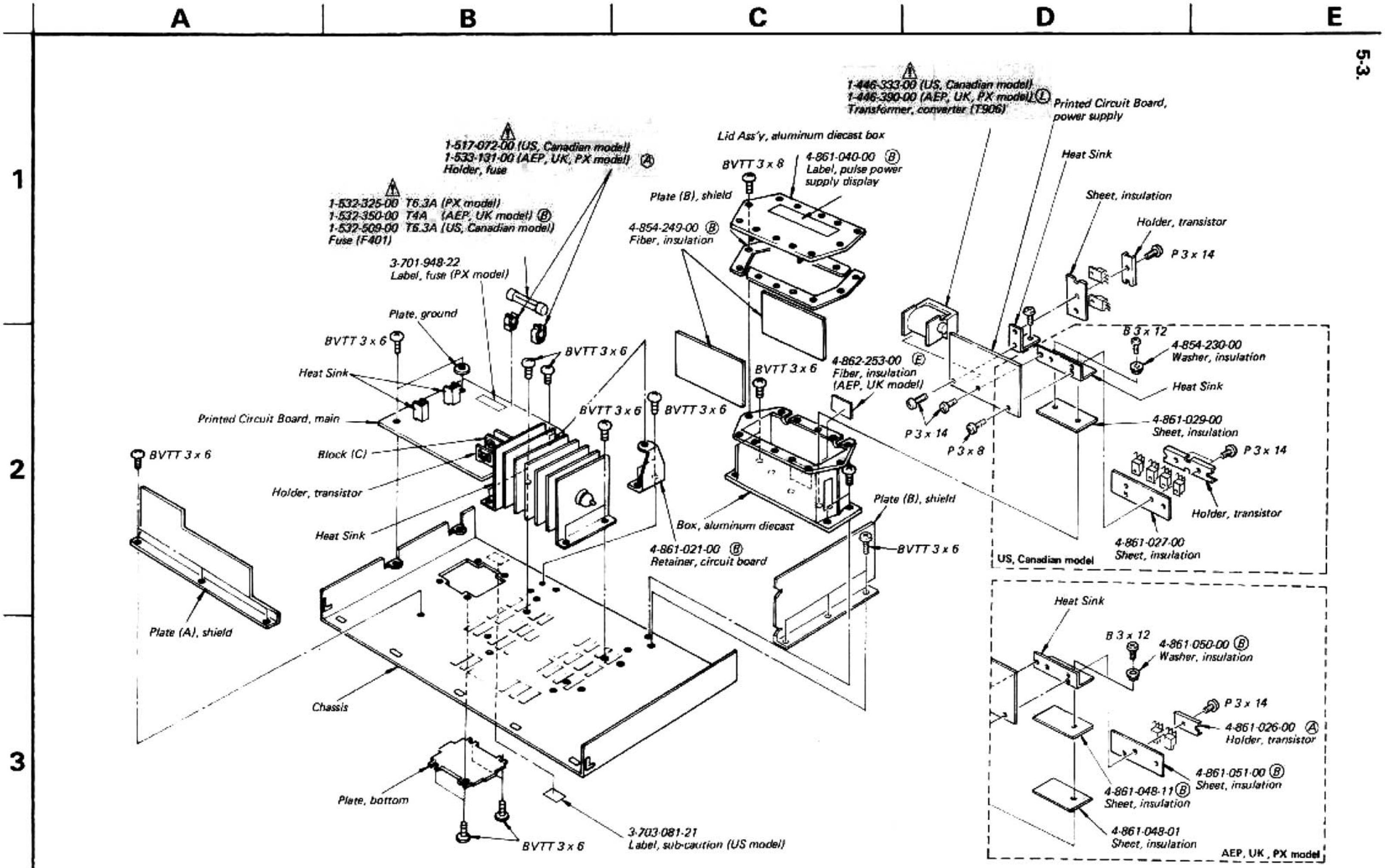

Note: The components identified by shading and mark ⚠ are critical for safety. Replace only with part number specified.

Note: Les composants identifiés par un tramé et une marque ⚠ sont critiques pour la sécurité. Ne les remplacer que par une pièce portant le numéro spécifié.

Note:

- Items with no part number and/or no description are not stocked because they are seldom required for routine service.
- All screws are Phillips (cross recess) type unless otherwise noted.
  (-) – slotted head
- Circled letters (Ⓐ to Ⓩ) are applicable to European models only.

SECTION 6
ELECTRICAL PARTS LIST

Note: Circled letters (Ⓐ to Ⓩ) are applicable to European models only.

Ref. No.	*Part No.*	*Description*
		SEMICONDUCTORS
		Transistors
Q101, 201 Q102, 202	8-729-354-52	Ⓔ 2SC2545
⇒Q103–105 ⇒ Q203–205	8-729-387-28	Ⓑ 2SA872
⇒ Q106, 206	8-765-082-20	Ⓒ 2SA896
⇒ Q107, 207	8-765-012-20	Ⓒ 2SC1811
⇒ Q108, 208	8-729-663-47	Ⓒ 2SC1364
⇒ Q109, 209	8-729-612-77	Ⓑ 2SA1027R
Q110, 210	8-729-663-47	Ⓒ 2SC1364
⇒Q111, 211	8-729-612-77	Ⓑ 2SA1027R
Q112, 212	8-729-663-47	Ⓒ 2SC1364
Q113, 213	8-729-397-22	Ⓘ 2SA1097
Q114, 214	8-729-371-22	Ⓖ 2SC2571
⇒ Q115, 215	⚠8-729-663-47	Ⓒ 2SC1364
⇒ Q301	⚠8-729-663-47	Ⓒ 2SC1364
⇒ Q302	⚠8-729-612-77	Ⓑ 2SA1027R
Q303–305	⚠8-729-663-47	Ⓒ 2SC1364
Q401	8-729-203-04	Ⓑ 2SK30A
⇒ Q402	8-729-663-47	Ⓒ 2SC1364
Q403	8-729-141-43	Ⓑ 2SD414
⇒Q404	8-729-612-77	Ⓑ 2SA1027R
⇒Q405	8-729-663-47	Ⓒ 2SC1364
Q406	8-729-141-43	Ⓑ 2SD414
Q407	8-729-203-04	Ⓑ 2SK30A
⇒Q408	8-729-612-77	Ⓑ 2SA1027R
Q409	8-729-154-83	Ⓑ 2SB548
⇒Q410	8-729-663-47	Ⓒ 2SC1364
⇒Q411	8-729-612-77	Ⓑ 2SA1027R
⇒Q412	8-765-082-20	Ⓒ 2SA896
⇒Q413	8-729-612-77	Ⓑ 2SA1027R
⇒Q901	⚠8-729-612-77	Ⓑ 2SA1027R
Q902	⚠8-729-663-47	Ⓒ 2SC1364
⇒Q903–906	⚠8-729-308-41	2SC1986D (US, Canadian model)
Q903, 904	⚠8-729-384-31	Ⓕ MN8301C (AEP, UK, PX model)

⇒: Due to standardization, interchangeable replacements may be substituted for parts specified in the diagrams.

Note: The components identified by shading and mark ⚠ are critical for safety. Replace only with part number specified.

Ref. No.	*Part No.*	*Description*
		ICs
IC101, 201	8-759-314-57	Ⓒ HA1457
IC102, 202	8-751-710-00	Ⓗ CX171
⇒ IC103, 203	8-759-145-58	Ⓓ μPC4558C
IC104, 204	8-759-924-06	Ⓖ 1R2406
		Diodes
D101, 201	8-719-815-55	Ⓑ 1S1555
D102, 202	8-719-912-00	Ⓑ MV12N
D103, 203	8-719-923-76	Ⓑ 1S2076A
D104, 204	8-719-912-00	Ⓑ MV12N
D105, 205	8-719-923-76	Ⓑ 1S2076A
⇒ D106, 206	8-719-422-21	Ⓑ 1T22AM
D107, 207	8-719-815-55	Ⓑ 1S1555
D108, 208	8-719-912-00	Ⓑ MV12N
D109, 209	8-719-910-40	Ⓑ MV104V
D110, 210	8-719-815-55	Ⓑ 1S1555
D111, 211	8-719-388-03	Ⓗ SEL8803
D112, 212	8-719-815-55	Ⓑ 1S1555
D301	⚠8-719-815-55	Ⓑ 1S1555
D302	⚠8-719-920-30	Ⓑ MV203V
⇒ D303	⚠8-719-931-30	Ⓑ EQB01-30
D304, 305	⚠8-719-815-55	Ⓑ 1S1555
D306–309	8-719-310-30	Ⓒ SEL103W
D310	8-719-920-30	Ⓑ MV203V
⇒ D401, 402	8-719-931-20	Ⓑ EQB01-20
⇒ D403–406	⚠8-719-911-55	Ⓑ U05G
D407	8-719-815-55	Ⓑ 1S1555
D901, 902	⚠8-719-815-55	Ⓑ 1S1555
⇒ D903, 904	⚠8-719-300-22	Ⓓ CTU22U
D905	⚠8-719-903-09	V30N(PX model)
		COILS AND TRANSFORMERS
L101, 201	1-407-519-00	Ⓑ Microinductor
L901–905	⚠1-421-329-00	Ⓑ Coil, choke
T901	⚠1-421-328-00	Line Filter (US, Canadian model)

Note: Les composants identifiés par un tramé et une marque ⚠ sont critiques pour la sécurité. Ne les remplacer que par une pièce portant le numéro spécifié.

www.hifiengine.com

Note: Circled letters (Ⓐ to Ⓩ) are applicable to European models only.

Ref. No.	*Part No.*	*Description*
T901	⚠1-421-340-00 Ⓔ	Line Filter (AEP, UK, PX model)
T902–905	⚠1-543-100-00	Core (US, Canadian model)
T904, 905	⚠1-543-100-00 Ⓑ	Core (AEP, UK, PX model)
T906	⚠1-446-333-00	Transformer, converter (US, Canadian model)
T906	⚠1-446-390-00 Ⓛ	Transformer, converter (AEP, UK, PX model)

CAPACITORS

All capacitors are in μF and ceramic unless otherwise noted.
50 WV or less are not indicated except for electrolytics.
pF : μμF, elect : electrolytic

C101	1-161-319-00 Ⓐ	470 p		
C102, 202	1-102-973-00 Ⓐ	100 p		
C103, 203	1-131-238-00 Ⓑ	10	25 V	tantalum
C104, 204	1-121-414-00 Ⓑ	100	10 V	elect
C105, 205	1-123-067-00 Ⓒ	2200	25 V	elect
C106, 206	1-131-218-00 Ⓑ	3.3	35 V	tantalum
C107, 207	1-121-422-00 Ⓑ	220	25 V	elect
C108, 208	1-161-316-00 Ⓐ	270 p		
C109, 209	1-130-205-00 Ⓒ	0.056	630 V	film
C110, 210	1-130-206-00 Ⓑ	0.016	630 V	film
C111, 211	1-161-317-00 Ⓐ	330 p		
C112, 212	1-123-232-00 Ⓑ	4.7	50 V	elect (nonpolarized)
C113, 213	1-131-214-00 Ⓑ	0.68	35 V	tantalum
C114, 214 / C115, 215	1-121-738-00 Ⓑ	10	50 V	elect
C116, 216	1-108-251-00 Ⓑ	0.1		mylar
C117, 217	1-161-317-00 Ⓐ	330 p		
C118, 218	1-123-228-00 Ⓑ	1	50 V	elect (nonpolarized)
C119, 219	1-121-411-00 Ⓑ	47	50 V	elect
C121, 221	1-161-257-00 Ⓐ	6.8 p		
C123, 223	1-121-726-00 Ⓑ	0.47	50 V	elect
C124, 224	1-102-117-00 Ⓐ	820 p		
C125, 225	1-108-358-00 Ⓑ	0.018		mylar
C126, 226	1-108-605-00 Ⓑ	0.12		mylar
C127, 227 / C128, 228	1-121-738-00 Ⓑ	10	50 V	elect
C129, 229	1-108-581-00 Ⓑ	0.012		mylar
C130, 230	1-121-726-00 Ⓑ	0.47	50 V	elect
C151, 251	1-102-123-00 Ⓐ	0.003		
C152, 252	1-123-232-00 Ⓑ	4.7	50 V	elect (nonpolarized)
C153, 253	1-121-352-00 Ⓑ	47	10 V	elect
C154, 254	1-121-421-00 Ⓑ	220	16 V	elect
C155, 255	1-121-726-00 Ⓑ	0.47	50 V	elect
C156, 256	1-121-421-00 Ⓑ	220	16 V	elect
C157, 257	1-102-816-00 Ⓐ	120 p		
C158, 258	1-107-169-00 Ⓑ	100 p	500 V	silvered mica
C159, 259 / C160, 260	1-161-056-00 Ⓐ	0.027	50 V	(semiconductor)
C161, 261	1-129-701-00 Ⓑ	0.01	100 V	film
C162, 262	1-107-169-00 Ⓑ	100 p	500 V	silvered mica
C164, 264	1-102-123-00 Ⓐ	0.003		
C166, 266	1-121-414-00 Ⓑ	100	6.3 V	elect
C167, 267	1-108-599-00 Ⓑ	0.068 (AEP, UK, model)		mylar
C167, 267	1-130-117-00	0.033 (US, Canadian, PX model)	100 V	film
C168, 268	1-121-450-00 Ⓑ	2.2	50 V	elect
C169, 269	1-121-395-00 Ⓑ	4.7	25 V	elect
C170, 270	1-121-726-00 Ⓑ	0.47	50 V	elect
C171, 271	1-161-261-00 Ⓐ	15 p		
C172, 272	1-108-599-00 Ⓑ	0.068 (AEP, UK model)		mylar
C301, 302	1-121-419-00 Ⓑ	200	6.3 V	elect
C401	1-121-396-00 Ⓑ	4.7	50 V	elect
C402	1-121-480-00 Ⓑ	22	25 V	elect
C403	1-121-388-00 Ⓒ	1000	35 V	elect
C404	1-121-416-00 Ⓑ	100	25 V	elect
C405	1-121-396-00 Ⓑ	4.7	50 V	elect
C406	1-121-480-00 Ⓑ	22	25V	elect
C407	1-121-388-00 Ⓒ	1000	35 V	elect
C408, 409	1-121-398-00 Ⓑ	10	25 V	elect
C410, 411	1-123-450-00 Ⓖ	3300	50 V	elect
C412, 413	1-121-411-00 Ⓐ	47	50 V	elect
C414	⚠1-125-180-00	1200 (US, Canadian model)	200 V	elect

Note: The components identified by shading and mark ⚠ are critical for safety. Replace only with part number specified.

Note: Les composants identifiés par un tramé et une marque ⚠ sont critiques pour la sécurité. Ne les remplacer que par une pièce portant le numéro spécifié.

www.hifiengine.com

Note: Circled letters (Ⓐ to Ⓩ) are applicable to European models only.

Ref. No.	Part No.	Description
C414, 415	⚠1-123-291-00 Ⓗ	680 200 V elect (AEP, UK, PX model)
C415, 416	⚠1-161-516-00	0.001 125 V (US, Canadian model)
C416, 417	⚠1-161-734-00 Ⓑ	0.0022 400 V (AEP, UK model)
C417	⚠1-102-222-000	0.001 250 V (PX model)
C417	⚠1-130-197-00	0.047 125 V film (US, Canadian model)
C418	⚠1-130-342-00 Ⓒ	0.47 300 V film (AEP, UK, PX model)
C419	⚠1-123-303-00	6800 6.3 V elect
C901	⚠1-130-141-00 Ⓑ	0.01 630 V film
C902, 903	⚠1-161-516-00	0.001 125 V (US, Canadian model)
C902, 903	⚠1-161-734-00 Ⓑ	0.0022 400 V (AEP, UK model)
C902, 903	⚠1-102-222-00	0.001 250 V (PX model)
C904	⚠1-123-401-00	47 200 V elect (US, Canadian model)
C904	⚠1-123-402-00 Ⓒ	22 400 V elect (AEP, UK, PX model)
C905	⚠1-108-595-00 Ⓑ	0.047 mylar
C906	⚠1-108-599-00 Ⓑ	0.068 mylar
C907, 908	⚠1-123-539-00	4.7 200 V elect (US, Canadian model)
C907, 908	⚠1-130-358-00	1.2 250 V (AEP, UK, PX model)
C909, 910	⚠1-123-376-00 Ⓒ	330 63 V elect
C911, 912	⚠1-123-374-00 Ⓑ	100 63 V elect
C913	⚠1-130-141-00 Ⓑ	0.01 630 V film
C914	⚠1-123-359-00	47 50 V elect (PX model)
C915	⚠1-161-734-00 Ⓑ	0.0022 400 V (AEP, UK model)

Note: The components identified by shading and mark ⚠ are critical for safety. Replace only with part number specified.

Ref. No.	Part No.	Description
		RESISTORS
		All resistors are in ohms. Common ¼ W carbon resistors are omitted. Refer to the list on page 29 for the their part numbers. (kΩ : 1000 Ω, MΩ : 1000 kΩ)
R102, 202	1-244-853-00 Ⓐ	150 ½ W
R103, 203	1-213-131-00 Ⓐ	100 ½ W
R104, 204, R105, 205	1-244-921-00 Ⓐ	100 k ½ W
R108, 208	1-214-084-00 Ⓐ	10 ¼ W (1 %) metal oxide
R109, 209	1-213-131-00 Ⓐ	100 ½ W
R110, 210	1-244-913-00 Ⓐ	47 k ½ W
R111, 211	1-244-890-00 Ⓐ	5.1 k ½ W
R112, 212	1-244-865-00 Ⓐ	470 ½ W
R117, 217	⚠1-212-982-00 Ⓑ	100 ½ W fusible
R118, 218	1-214-130-00 Ⓐ	820 ¼ W (1 %) metal oxide
R119, 219	1-214-174-00 Ⓐ	56 k ¼ W (1 %) metal oxide
R120, 220	1-214-142-00 Ⓐ	2.7 k ¼ W (1 %) metal oxide
R121, 221	1-214-139-00 Ⓐ	2 k ¼ W (1 %) metal oxide
R124, 224	1-244-913-00 Ⓐ	47 k ½ W
R125, 225	1-244-873-00 Ⓐ	1 k ½ W
R126, 226	1-244-921-00 Ⓐ	100 k ½ W
R127, 227	1-244-913-00 Ⓐ	47 k ½ W
R129, 229	1-244-892-00 Ⓐ	6.2 k ½ W
R131, 231	1-244-873-00 Ⓐ	1 k ½ W
R132, 232	1-244-942-00 Ⓐ	750 k ½ W
R141, 241	1-244-906-00 Ⓐ	24 k ½ W
R142, 242	1-244-908-00 Ⓐ	30 k ½ W
R143, 243	1-244-885-00 Ⓐ	3.3 k ½ W
R144, 244	1-244-861-00 Ⓐ	330 ½ W
R151, 251	1-244-915-00 Ⓐ	56 k ½ W
R153, 253	1-244-857-00 Ⓐ	220 ½ W
R157, 257	1-244-885-00 Ⓐ	3.3 k ½ W
R158, 258	1-244-857-00 Ⓐ	220 ½ W
R164, 264	⚠1-212-988-00 Ⓑ	180 ½ W fusible
R168, 268	1-217-156-00 Ⓑ	0.22 5 W wirewound
R170, 270	⚠1-212-988-00 Ⓑ	180 ½ W fusible
R176	1-217-156-00 Ⓑ	0.22 5 W wirewound
R177, 277	⚠1-212-962-00 Ⓑ	15 ½ W fusible

Note: Les composants identifiés par un tramé et une marque ⚠ sont critiques pour la sécurité. Ne les remplacer que par une pièce portant le numéro spécifié.

www.hifiengine.com

Note: Circled letters (Ⓐ to Ⓩ) are applicable to European models only.

Ref. No.	Part No.	Description
R188, 281	1-244-829-00 Ⓐ	15 ½ W
R182, 282, R183, 283	1-244-825-00 Ⓐ	10 ½ W
R184, 284	1-244-865-00 Ⓐ	470 ½ W
R311	1-206-656-00 Ⓑ	470 2 W metal oxide (nonflammable)
R403	1-214-130-00 Ⓐ	820 ¼ W (1 %) metal oxide
R404	1-214-148-00 Ⓐ	4.7 k ¼ W (1 %) metal oxide (nonflammable)
R407	1-206-709-00 Ⓑ	220 3 W metal oxide (nonflammable)
R411	1-214-130-00 Ⓐ	820 ¼ W (1 %) metal oxide
R412	1-214-418-00 Ⓐ	4.7 k ¼ W (1 %) metal oxide
R416	1-244-874-00	1.1 k ½ W carbon (US, Canadian model)
R416	1-244-880-00 Ⓐ	3.3 k ½ W carbon (AEP, UK, PX model)
R417	1-214-176-00 Ⓐ	68 k ¼ W (1 %) metal oxide
R418	⚠1-205-598-00	33 5 W wirewound (US, Canadian model)
R418	⚠1-205-599-00 Ⓑ	75 5 W wirewound (AEP, UK, PX model)
R420	⚠1-206-678-00	3.9 k 2 W metal oxide (nonflammable) (PX model)
R421	⚠1-206-674-00	2.7 k 2 W metal oxide (nonflammable) (PX model)
R901	⚠1-244-927-00 Ⓐ	180 k ½ W (AEP, UK, PX model)
R901	⚠1-246-515-00	82 k ¼ W (US, Canadian model)
R902, 903	⚠1-246-483-00 Ⓐ	2.7 k ¼ W
R904	⚠1-246-507-00 Ⓐ	27 k ¼ W
R905	⚠1-246-469-00 Ⓐ	680 ¼ W
R906	⚠1-244-827-00 Ⓐ	12 ½ W
RT101,201	1-224-251-XX Ⓑ	4.7 k-B, adjustable; dc balance
RT102,202	1-224-254-XX Ⓑ	47 k-B, adjustable; dc bias
RT103,203	1-222-254-XX Ⓑ	47 k-B, adjustable, meter level
RV101,201	1-226-424-00 Ⓓ	250 k-Z, variable, BALANCE
RV102,202	1-226-423-00 Ⓔ	100/100 k-B, variable, VOLUME
RV103,203	1-226-125-00 Ⓓ	100/100 k-C, variable, TREBLE
RV104,204	1-226-126-00 Ⓔ	100/100 k-C, variable, BASS

SWITCHES

Ref. No.	Part No.	Description
S1-1-5	1-552-698-00 Ⓖ	Pushbutton, AUX/TUNER/ PHONO/CARTRIDGE/LOW FILTER
S2	1-552-701-00 Ⓔ	Rotary-slide, MONITOR
S3	1-552-701-00 Ⓔ	Rotary-slide, TAPE COPY
S4	1-552-699-00 Ⓔ	Rotary-slide, MODE
S5	1-552-466-00 Ⓒ	Pushbutton, LOUDNESS
S6	1-552-700-00 Ⓔ	Rotary-slide, SPEAKERS
S401	⚠1-552-141-12 Ⓔ	Pushbutton, POWER (AEP, UK, PX model)
S401	⚠1-552-246-00	Pushbutton, POWER (US, Canadian model)
VS	⚠1-552-963-00	Voltage Selector (PX model)

JACKS

Ref. No.	Part No.	Description
CNJ101–103, CNJ201–203	1-507-631-00 Ⓔ	Phono, 6 p; PHONO, TUNER, AUX
CNJ104–107, CNJ204–207	1-507-630-00 Ⓒ	Phono, 4 p; TAPE 1, 2 REC OUT 1, 2
CNJ301	1-507-561-00 Ⓒ	HEADPHONES

MISCELLANEOUS

Ref. No.	Part No.	Description
CNP701	⚠1-526-574-00	Socket, AC OUTLET (US, Canadian model)
F401	⚠1-532-325-00	Fuse, T6.3A (PX model)
F401	⚠1-532-350-00 Ⓑ	Fuse, T4A (AEP, UK model)
F401	⚠1-532-509-00	Fuse, 6.3A (US, Canadian model)
F402	⚠1-532-556-00 Ⓑ	Fuse, 2A; thermal
RY301	⚠1-515-302-00 Ⓕ	Relay
RY302	⚠1-515-278-00	Relay (US, Canadian model)
RY302	⚠1-515-347-00 Ⓕ	Relay (AEP, UK, PX model)
RY901	⚠1-515-349-00	Relay (PX model)
TM301, 302	1-536-571-00 Ⓒ	Terminal, 4 p; SPEAKER (A, B)
	⚠1-517-072-00	Holder, fuse (US, Canadian model)
	⚠1-533-131-00 Ⓐ	Holder, fuse (AEP, UK, PX model)
	⚠1-534-777-00 Ⓔ	Cord, power (UK model)
	⚠1-534-817-00 Ⓔ	Cord, power (AEP model)
	⚠1-534-993-00	Cord, power (PX model)
	⚠1-551-510-11	Cord, power (US, Canadian model)

Note: The components identified by shading and mark ⚠ are critical for safety. Replace only with part number specified.

Note: Les composants identifiés par un tramé et une marque ⚠ sont critiques pour la sécurité. Ne les remplacer que par une pièce portant le numéro spécifié.

Note: Circled letters (Ⓐ to Ⓩ) are applicable to European models only.

ACCESSORIES AND PACKING MATERIALS

Part No.		*Description*
1-526-565-11		Adaptor, ac plug (PX1 model)
3-429-126-00	Ⓑ	Bag plastic
3-558-465-00	Ⓑ	Cushion
3-701-630-00	Ⓐ	Bag, plastic
3-701-730-00	Ⓑ	Bag, plastic
3-770-656-11	Ⓓ	Manual, instruction (AEP, UK, PX model)
3-770-656-21		Manual, instruction (US, Canadian model)
3-794-233-21		Card, instruction (US model)
3-794-495-31		Card, instruction; French (Canadian model)
4-861-056-00	Ⓔ	Carton

1/4 WATT CARBON RESISTORS Ⓐ

Ω	*Part No.*	Ω	*Part No.*	Ω	*Part No.*	Ω	*Part No.*	Ω	*Part No.*	Ω	*Part No.*	Ω	*Part No.*
1.0	1-246-401-00	10	1-246-425-00	100	1-246-449-00	1.0k	1-246-473-00	10k	1-246-497-00	100k	1-246-521-00	1.0M	1-246-545-00
1.1	1-246-402-00	11	1-246-426-00	110	1-246-450-00	1.1k	1-246-474-00	11k	1-246-498-00	110k	1-246-522-00	1.1M	1-210-814-00
1.2	1-246-403-00	12	1-246-427-00	120	1-246-451-00	1.2k	1-246-475-00	12k	1-246-499-00	120k	1-246-523-00	1.2M	1-210-815-00
1.3	1-246-404-00	13	1-246-428-00	130	1-246-452-00	1.3k	1-246-576-00	13k	1-246-500-00	130k	1-246-524-00	1.3M	1-210-816-00
1.5	1-246-405-00	15	1-246-429-00	150	1-246-453-00	1.5k	1-246-577-00	15k	1-246-501-00	150k	1-246-525-00	1.5M	1-210-817-00
1.6	1-246-406-00	16	1-246-430-00	160	1-246-454-00	1.6k	1-246-578-00	16k	1-246-502-00	160k	1-246-526-00	1.6M	1-210-818-00
1.8	1-246-407-00	18	1-246-431-00	180	1-246-455-00	1.8k	1-246-579-00	18k	1-246-503-00	180k	1-246-527-00	1.8M	1-210-819-00
2.0	1-246-408-00	20	1-246-432-00	200	1-246-456-00	2.0k	1-246-580-00	20k	1-246-504-00	200k	1-246-528-00	2.0M	1-210-820-00
2.2	1-246-409-00	22	1-246-433-00	220	1-246-457-00	2.2k	1-246-581-00	22k	1-246-505-00	220k	1-246-529-00	2.2M	1-210-821-00
2.4	1-246-410-00	24	1-246-434-00	240	1-246-458-00	2.4k	1-246-582-00	24k	1-246-506-00	240k	1-246-530-00	2.4M	1-244-754-00
2.7	1-246-411-00	27	1-246-435-00	270	1-246-459-00	2.7k	1-246-583-00	27k	1-246-507-00	270k	1-246-531-00	2.7M	1-244-755-00
3.0	1-246-412-00	30	1-246-436-00	300	1-246-460-00	3.0k	1-246-584-00	30k	1-246-508-00	300k	1-246-532-00	3.0M	1-244-756-00
3.3	1-246-413-00	33	1-246-437-00	330	1-246-461-00	3.3k	1-246-585-00	33k	1-246-509-00	330k	1-246-533-00	3.3M	1-244-757-00
3.6	1-246-414-00	36	1-246-438-00	360	1-246-462-00	3.6k	1-246-586-00	36k	1-246-510-00	360k	1-246-534-00	3.6M	1-244-758-00
3.9	1-246-415-00	39	1-246-439-00	390	1-246-463-00	3.9k	1-246-587-00	39k	1-246-511-00	390k	1-246-535-00	3.9M	1-244-759-00
4.3	1-246-416-00	43	1-246-440-00	430	1-246-464-00	4.3k	1-246-488-00	43k	1-246-512-00	430k	1-246-536-00	4.3M	1-244-760-00
4.7	1-246-417-00	47	1-246-441-00	470	1-246-465-00	4.7k	1-246-489-00	47k	1-246-513-00	470k	1-246-537-00	4.7M	1-244-761-00
5.1	1-246-418-00	51	1-246-442-00	510	1-246-466-00	5.1k	1-246-490-00	51k	1-246-514-00	510k	1-246-538-00	5.1M	1-244-762-00
5.6	1-246-419-00	56	1-246-443-00	560	1-246-467-00	5.6k	1-246-491-00	56k	1-246-515-00	560k	1-246-539-00		
6.2	1-246-420-00	62	1-246-444-00	620	1-246-468-00	6.2k	1-246-492-00	62k	1-246-516-00	620k	1-246-540-00		
6.8	1-246-421-00	68	1-246-445-00	680	1-246-469-00	6.8k	1-246-493-00	68k	1-246-517-00	680k	1-246-541-00		
7.5	1-246-422-00	75	1-246-446-00	750	1-246-470-00	7.5k	1-246-494-00	75k	1-246-518-00	750k	1-246-542-00		
8.2	1-246-423-00	82	1-246-447-00	820	1-246-471-00	8.2k	1-246-495-00	82k	1-246-519-00	820k	1-246-543-00		
9.1	1-246-424-00	91	1-246-448-00	910	1-246-472-00	9.1k	1-246-496-00	91k	1-246-520-00	910k	1-246-544-00		

www.hifiengine.com

HARDWARE NOMENCLATURE

Screw: — P 3 x 10

- L: *Length in mm*
- D: *Diameter in mm*
- *Type of head*
- *Indicated slotted-head only. Unless otherwise indicated, it means cross-recessed head (Phillips type).*

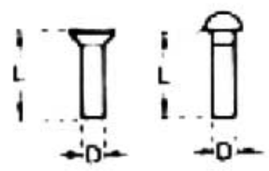

Nut, Washer, Retaining ring: N 3

- *Diameter of usable screw or shaft*
- *Reference designation*

Reference Designation	Shape	Description	Remarks
		SCREWS	
P		pan-head screw	binding-head (B) screw for replacement
PWH		pan-head screw with washer face	binding-head (B) screw and flat washer for replacement
PS PSP		pan-head screw with spring washer	binding-head (B) screw and spring washer for replacement
PSW PSPW		pan-head screw with spring and flat washers	binding-head (B) screw and spring and flat washers for replacement
R		round-head screw	binding-head (B) screw for replacement
K		flat-countersunk-head screw	
RK		oval-countersunk-head screw	
B		binding-head screw	
T		truss-head screw	binding-head (B) screw for replacement
F		flat-fillister-head screw	
RF		fillister-head screw	
BV		brazer-head screw	

Reference Designation	Shape	Description	Remarks
		SELF-TAPPING SCREWS	
TA		self-tapping screw	ex: TA, P 3 x 10
PTP		pan-head self-tapping screw	binding-head self-tapping (TA, B) screw for replacement
PTPWH		pan-head self-tapping screw with washer face	binding-head self tapping (TA, B) screw and flat washer for replacement
PTTWH		pan-head thread-rolling screw with washer face	binding-head (B) screw and flat washer for replacement
		SET SCREWS	
SC		set screw	
SC		hexagon-socket set screw	ex: SC 2.6 x 4, hexagon socket
		NUT	
N		nut	
		WASHERS	
W		flat washer	
SW		spring washer	
LW		internal-tooth lock washer	ex: LW3, internal
LW		external-tooth lock washer	ex: LW3, external
		RETAINING RINGS	
E		retaining ring	
G		grip-type retaining ring	

Sony Corporation

9-958-587-11

79E0599-1

Printed in Japan

www.hifiengine.com