TA-A400

SERVICE MANUAL

US Model
Canadian Model
AEP Model
UK Model

SPECIFICATIONS

Amplifier

Continuous RMS power output (both channels driven simultaneously)

US, Canadian model:
at 20 Hz – 20 kHz
100 W + 100 W (0.05% THD, 8 ohms)
AEP, G-AEP, UK model:
at 1 kHz
110 W + 110 W (5% THD, 4 ohms)
at 20 Hz – 20 kHz
80 W + 80 W (0.05% THD, 4 ohms)
at 40 Hz – 12.5 kHz
90 W + 90 W (0.05% THD, 4 ohms)

Power bandwidth (IHF)
US, Canadian model:
7 Hz – 40 kHz (8 ohms, 50 watts)
AEP, G-AEP, UK model:
7 Hz – 40 kHz (4 ohms, 40 watts)

Dynamic headroom
1.6 dB ('78 IHF)

Harmonic distortion
Less than 0.05% at rated output

Intermodulation (IM) distortion (60 Hz : 7 kHz = 4 : 1)
Less than 0.05% at rated output

Frequency response
PHONO: RIAA equalization curve ±0.5 dB
TUNER, CD, VIDEO/AUX, TAPE1, TAPE2/DAT:
7 Hz – 100 kHz ±3 dB

Residual noise
US, Canadian model:
Less than 300 μV (8 ohms, network A)
AEP, G-AEP, UK model:
Less than 200 μV (4 ohms, network A)

Damping factor
50 (8 ohms, 1 kHz)

Input

Input jack		Jack type	Sensitivity	Impedance	S/N (weighting network, input level)
PHONO	MM	Phono	2.0 mV	50 kilohms	88 dB 86 dB* (A, 2.0 mV)
	MC	Phono	170 μV	100 ohms	68 dB 75 dB* (A, 170 μV)
TUNER CD VIDEO/AUX TAPE		Phono	150 mV	50 kilohms	100 dB 88 dB* (150 mV)

*'78 IHF

Output

REC OUT	Phono jacks	Voltage 150 mV Impedance 1 kilohm
SPEAKERS	—	Accepts speakers of 4 - 16 ohms.
HEAD-PHONES	Stereo phone jack	Accepts low and high impedance headphones.

Tone controls

	Response	Turnover frequency
BASS	±10 dB (100 Hz)	500 Hz
TREBLE	±10 dB (15 kHz)	3 kHz

— Continued on page 2 —

MICROFILM

INTEGRATED STEREO AMPLIFIER

SONY®

AUD

Loudness (Attenuation 30 dB)
US, Canadian model: +7 dB (100 Hz)
+2 dB (10 kHz)
AEP, G-AEP, UK model: +6 dB (100 Hz)
+2 dB (10 kHz)

Subsonic filter: Response: 6 dB/octabe
Cutoff: Below 15 Hz

Muting: –20 dB

General

System: Preamplifier: Low-noise, high-gain equalizer amplifier
Power amplifier: Pure-complementary SEPP OCL power amplifier with all stages directly coupled

Power requirements
US, Canadian model: 120 V AC, 60 Hz
AEP, G-AEP model: 220 V AC (or 240 V AC adjustable by authorized Sony personnel), 50 Hz
UK model: 240 V AC (or 220 V AC adjustable by authorized Sony personnel), 50 Hz

Power consumption
US model: 170 W
Canadian model: 390 VA
AEP, G-AEP model: 180 W
UK model: 480 W

AC outlets: US, Canadian model: 2 switched, total 100 watts max. 1 unswitched, 100 watts max.
AEP, G-AEP model: 3 switched, total 100 watts max.
UK model: 1 switched, 100 watts max.

Dimensions: AEP, G-AEP model:
Approx. 430 x 130 x 360 mm (w/h/d)
(17 x 5 1/8 x 14 1/4 inches)
US, Canadjan, UK model:
Approx. 430 x 130 x 350 mm (w/h/d)
(17 x 5 1/8 x 13 7/8 inches)

Weight: Approx. 8.7 kg (19 lb 3 oz)

TABLE OF CONTENTS

Section	Title	Page
	Specifications	1
	Model Identification	2
	Safety Check-out (US model)	3
	Location and Function of Controls	3
1.	ELECTRICAL ADJUSTMENTS	5
	Circuit Boards Location	6
	Semiconductor Lead Layouts	7
2.	DIAGRAMS	
2-1.	Mounting Diagram	8
2-2.	Schematic Diagram	13
3.	EXPLODED VIEWS AND PARTS LIST	18
4.	ELECTRICAL PARTS LIST	21
	Troubleshooting	26

MODEL IDENTIFICATION

– Specification Label –

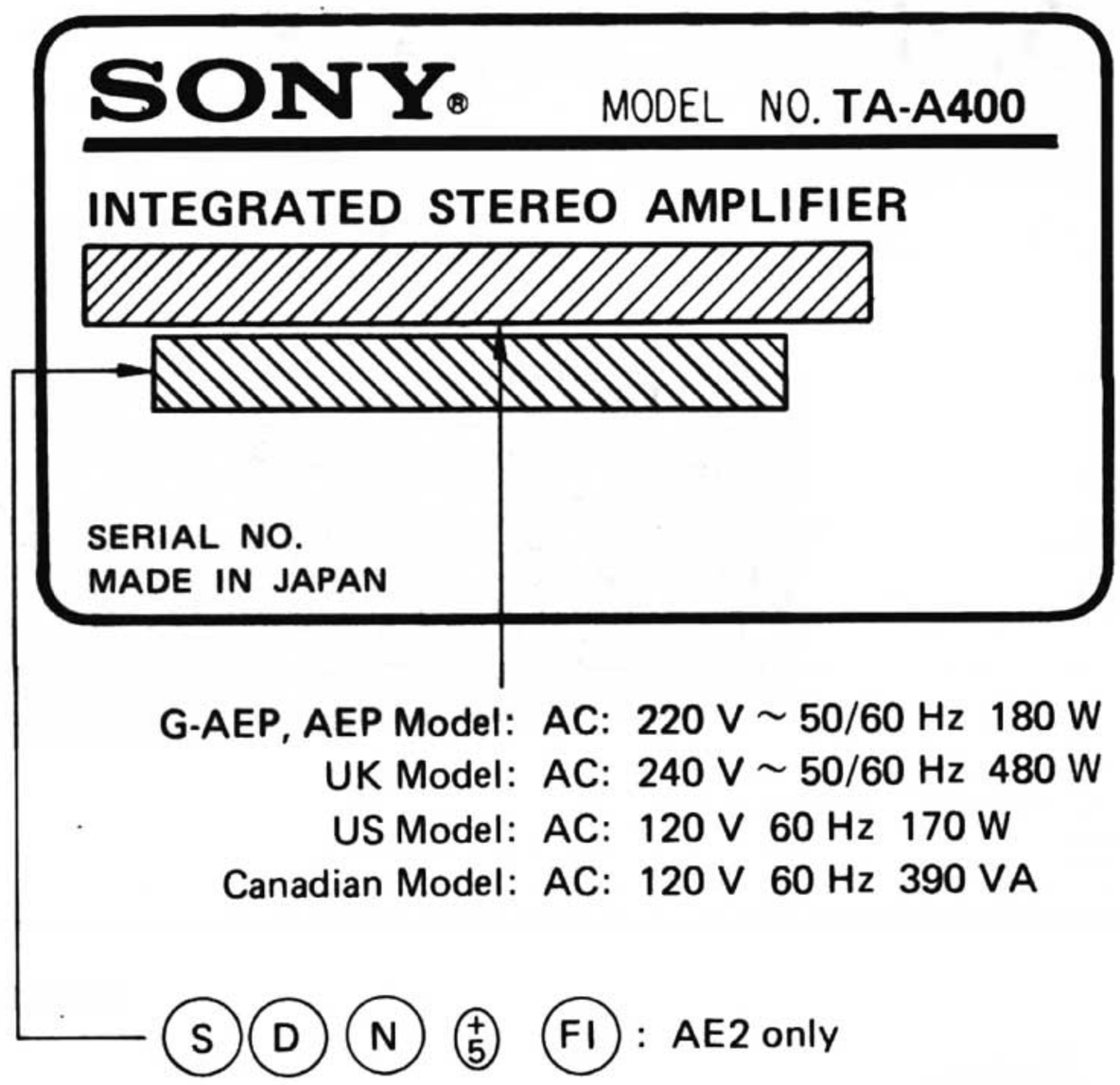

– Back Panel –

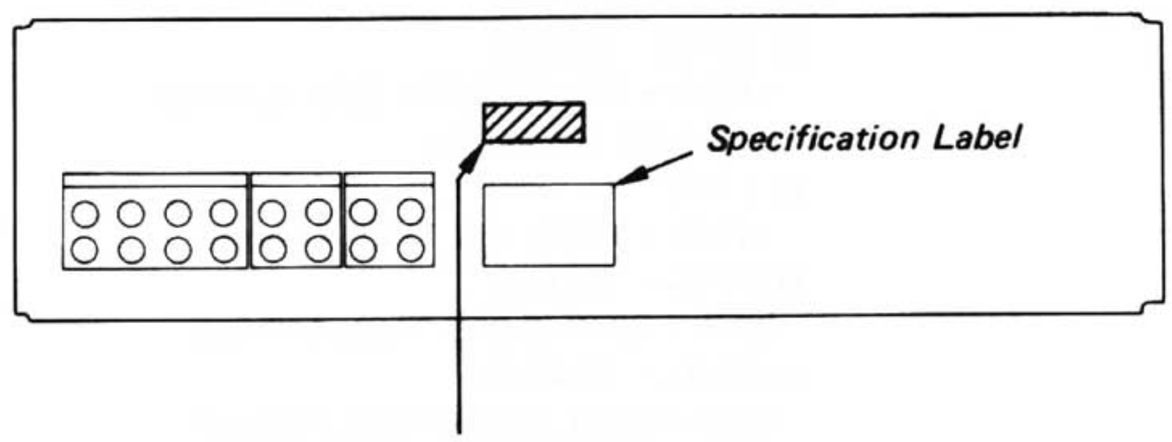

DBP mark is carved only in G-AEP model as shown above.

ATTENTION AU COMPOSANT AYANT RAPPORT À LA SÉCURITÉ!

LES COMPOSANTS IDENTIFIÉS PAR UNE TRAME ET UNE MARQUE ⚠ SUR LES DIAGRAMMES SCHÉMATIQUES ET LA LISTE DES PIÈCES SONT CRITIQUES POUR LA SÉCURITÉ DE FONCTIONNEMENT. NE REMPLACER CES COMPOSANTS QUE PAR DES PIÈCES SONY DONT LES NUMÉROS SONT DONNÉS DANS CE MANUEL OU DANS LES SUPPLÉMENTS PUBLIÉS PAR SONY.

SAFETY-RELATED COMPONENT WARNING!!

COMPONENTS IDENTIFIED BY SHADING AND MARK ⚠ ON THE SCHEMATIC DIAGRAMS AND IN THE PARTS LIST ARE CRITICAL TO SAFE OPERATION. REPLACE THESE COMPONENTS WITH SONY PARTS WHOSE PART NUMBERS APPEAR AS SHOWN IN THIS MANUAL OR IN SUPPLEMENTS PUBLISHED BY SONY.

www.hifiengine.com

SECTION 1
ELECTRICAL ADJUSTMENTS

NOTE:

- Adjustments should be performed 10 minutes after the POWER switch is on (POWER ON).

Bias Current Adjustment

Setting:

AUDIO SOURCE selector: TUNER
Input Signal: No signal input

Procedure:

Adjust RV501 (L-CH) and RV601 (R-CH) so as to obtain 3 mV at CNB5 (L-CH) and CNB6 (R-CH) respectively.

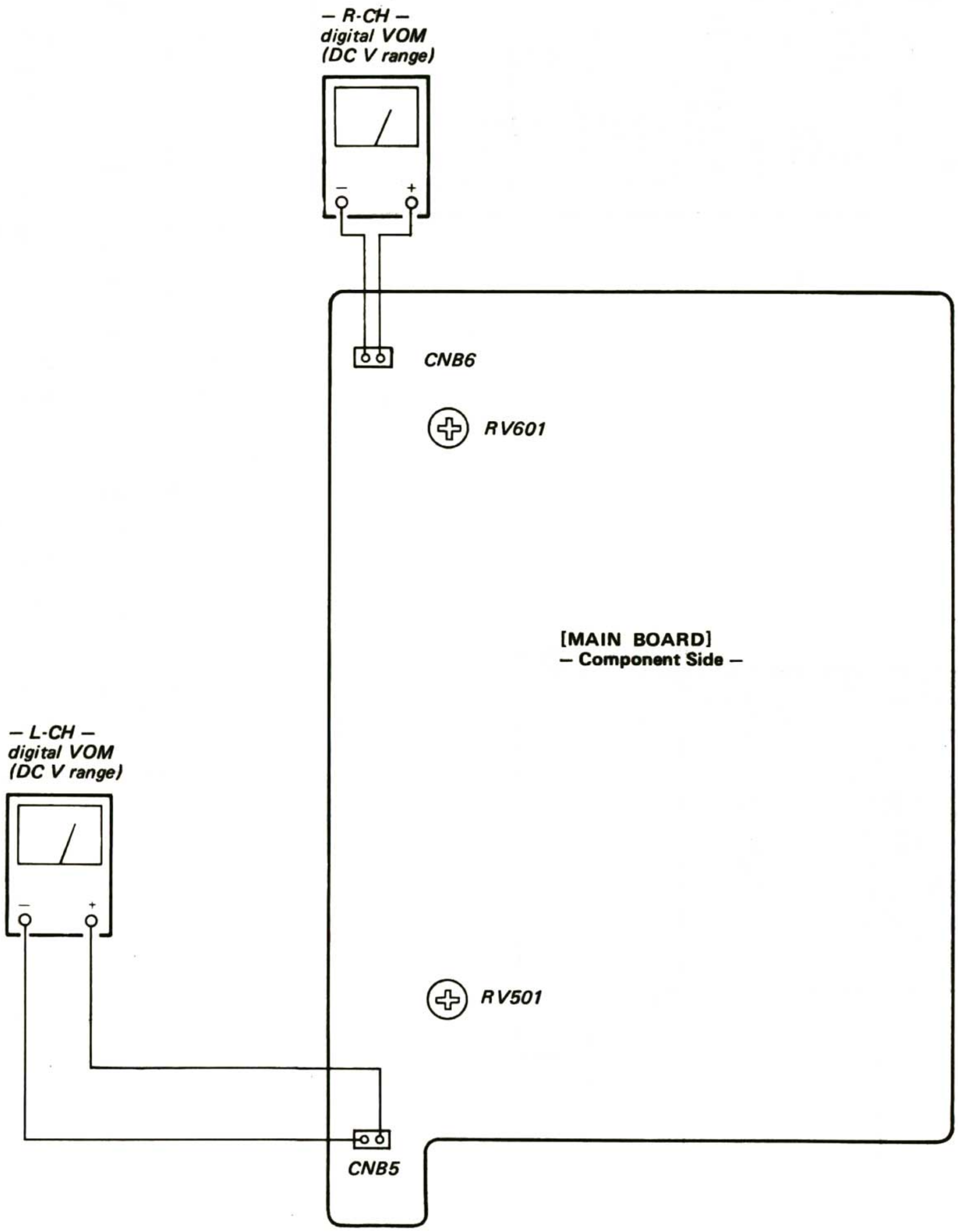

• Circuit Boards Location

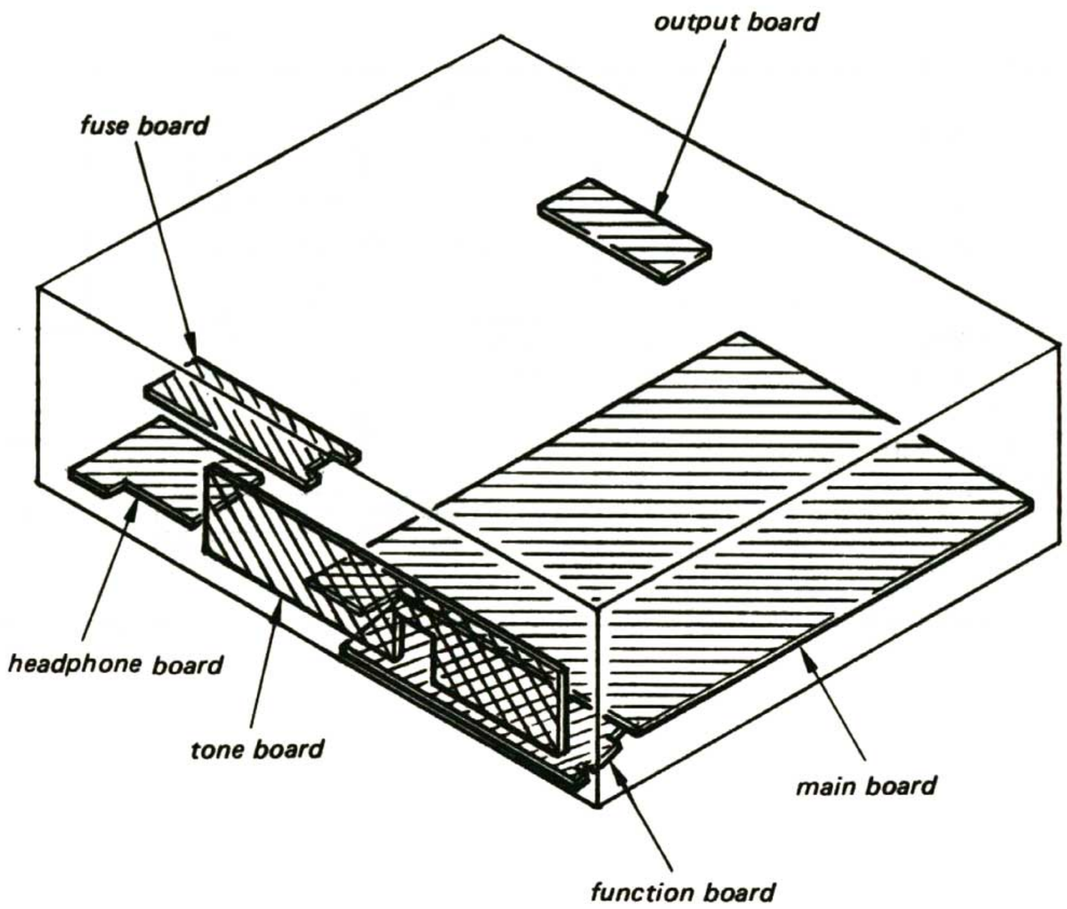

• Semiconductor Lead Layouts

BA4560

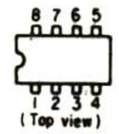

2SA1175
2SC2785

SEL1910W

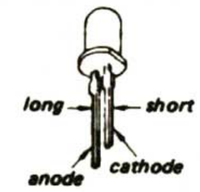

M5218L
μPC1237HA

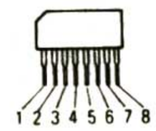

2SA1346
2SC634SP

SEL4510C-C

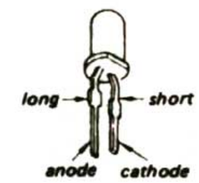

2SA979

2SA1491
2SC3855

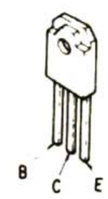

2SA985
2SA985A
2SB1094-L
2SC2275
2SC2275A
2SC3514
2SD1585-L

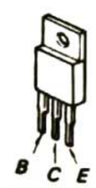

2SK246GR3

2SA988
2SC1383
2SC1841
2SC2545

10E2N
1SS131
1SS132
HZ15-2L
HZ3B-2L
HZ6A-2L
HZ7B-2K

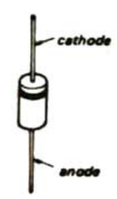

SECTION 2
DIAGRAMS

2-1. MOUNTING DIAGRAM

- See page 6 for Circuit Boards Location.
- See page 7 for Semiconductor Lead Layouts.

• SEMICONDUCTOR LOCATION

Ref. No.	Location	Ref. No.	Location
D050	G-14	Q505	J-18
D051	F-14	Q506	H-16
D052	E-14	Q507	I-19
D053	D-14	Q508	H-16
D054	C-14	Q509	I-18
D055	B-14	Q510	I-17
D056	D-9	Q511	J-19
D057	F-21	Q512	J-16
D201	B-21	Q513	G-17
D501	H-16	Q514	I-16
D502	H-18	Q601	G-23
D503	G-17	Q602	H-23
D504	F-17	Q603	H-24
D601	H-23	Q604	H-25
D602	H-24	Q605	J-23
D603	H-22	Q606	H-23
D604	G-21	Q607	I-25
D700	I-20	Q608	H-23
D701	F-21	Q609	I-25
D702	G-21	Q610	I-23
D703	F-21	Q611	J-24
D800	E-19	Q612	J-22
D802	G-20	Q613	G-23
D803	G-20	Q614	I-22
D804	E-18	Q700	F-19
		Q800	E-19
IC100	B-22	Q801	E-19
IC300	D-6	Q803	E-18
IC700	F-22	Q804	E-18
Q050	E-20		
Q051	E-20		
Q100	B-23		
Q101	B-23		
Q200	C-23		
Q201	C-23		
Q501	H-17		
Q502	G-17		
Q503	H-18		
Q504	H-18		

Note:

- Color code or sleeving over the end of the jacket.

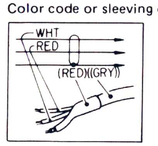

- ○—— : parts extracted from the component side.
- ●—— : parts extracted from the conductor side.

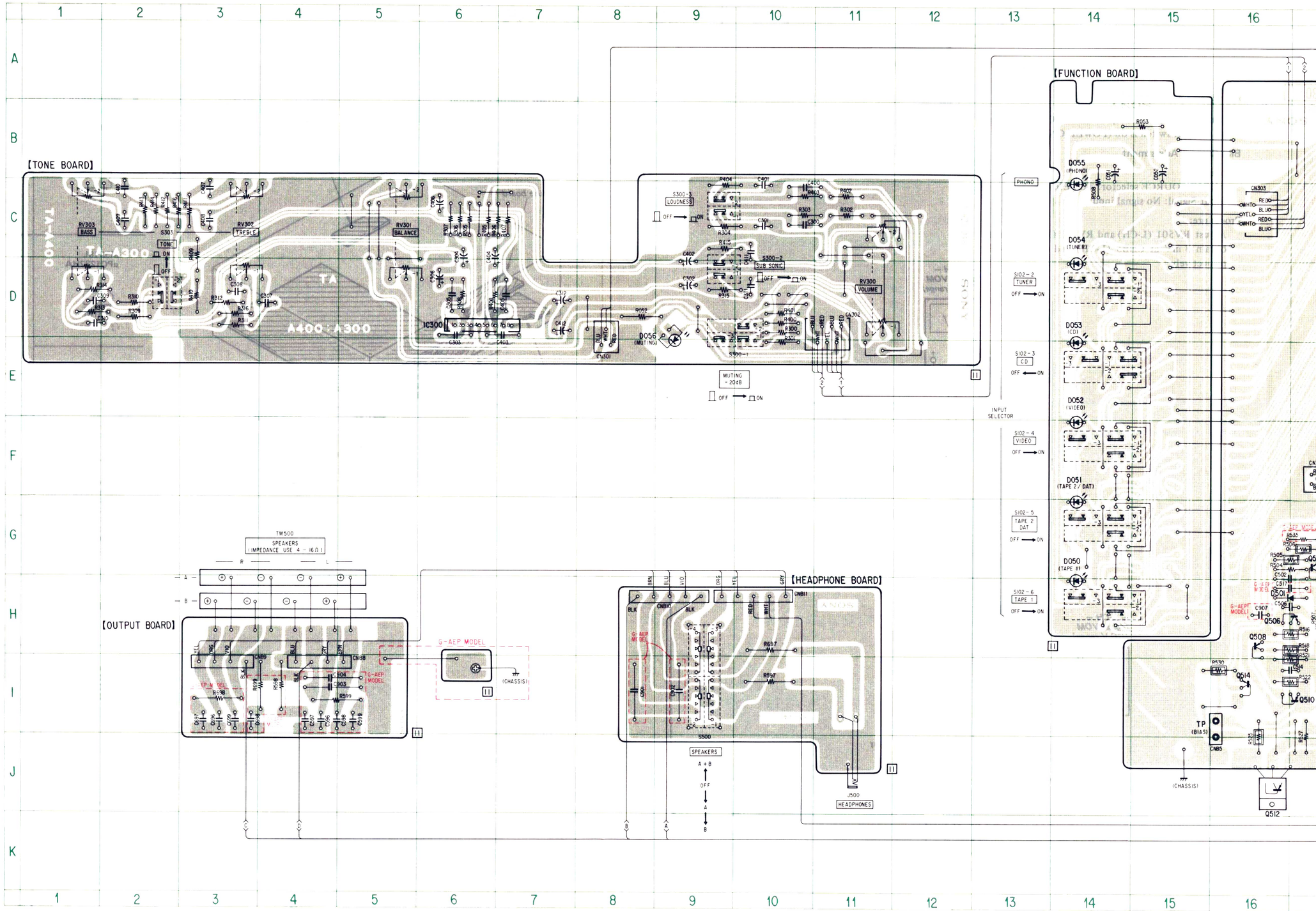

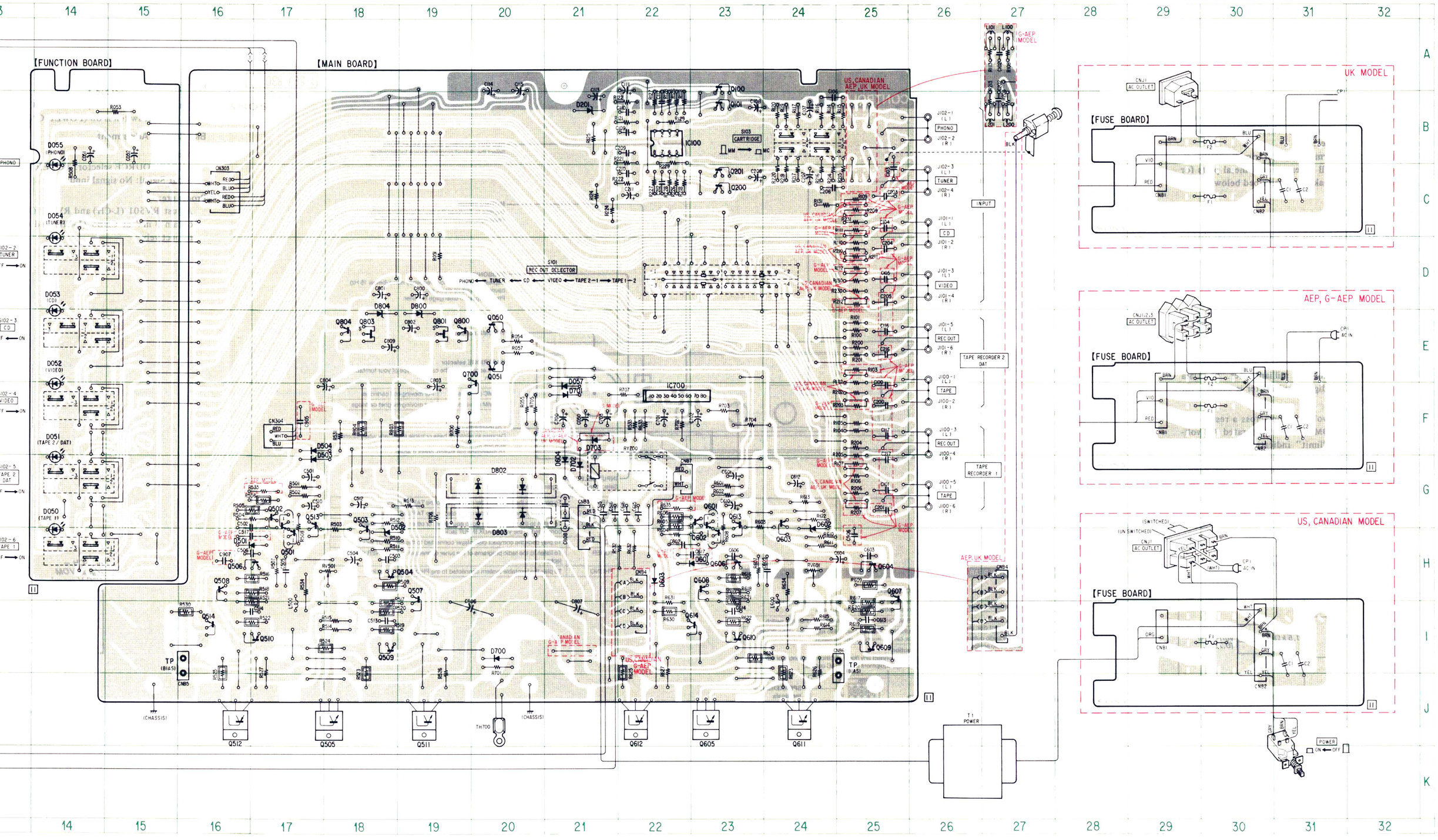
【FUNCTION BOARD】
【MAIN BOARD】
US, CANADIAN AEP, UK MODEL
G-AEP MODEL
UK MODEL
【FUSE BOARD】
AEP, G-AEP MODEL
【FUSE BOARD】
US, CANADIAN MODEL
【FUSE BOARD】
AEP, UK MODEL
INPUT
TAPE RECORDER 2 DAT
TAPE RECORDER 1
PHONO
TUNER
CD
VIDEO
REC OUT
TAPE
S101 REC OUT SELECTOR
PHONO ← TUNER ← CD ← VIDEO ← TAPE 2 — 1 → TAPE 1 — 2
S103 CARTRIDGE
MM → MC
IC100
IC700
T1 POWER
POWER
ON ← OFF
(CHASSIS)
TP (BIAS)
TH700
Q512
Q505
Q511
Q612
Q605
Q611

2-2. SCHEMATIC DIAGRAM

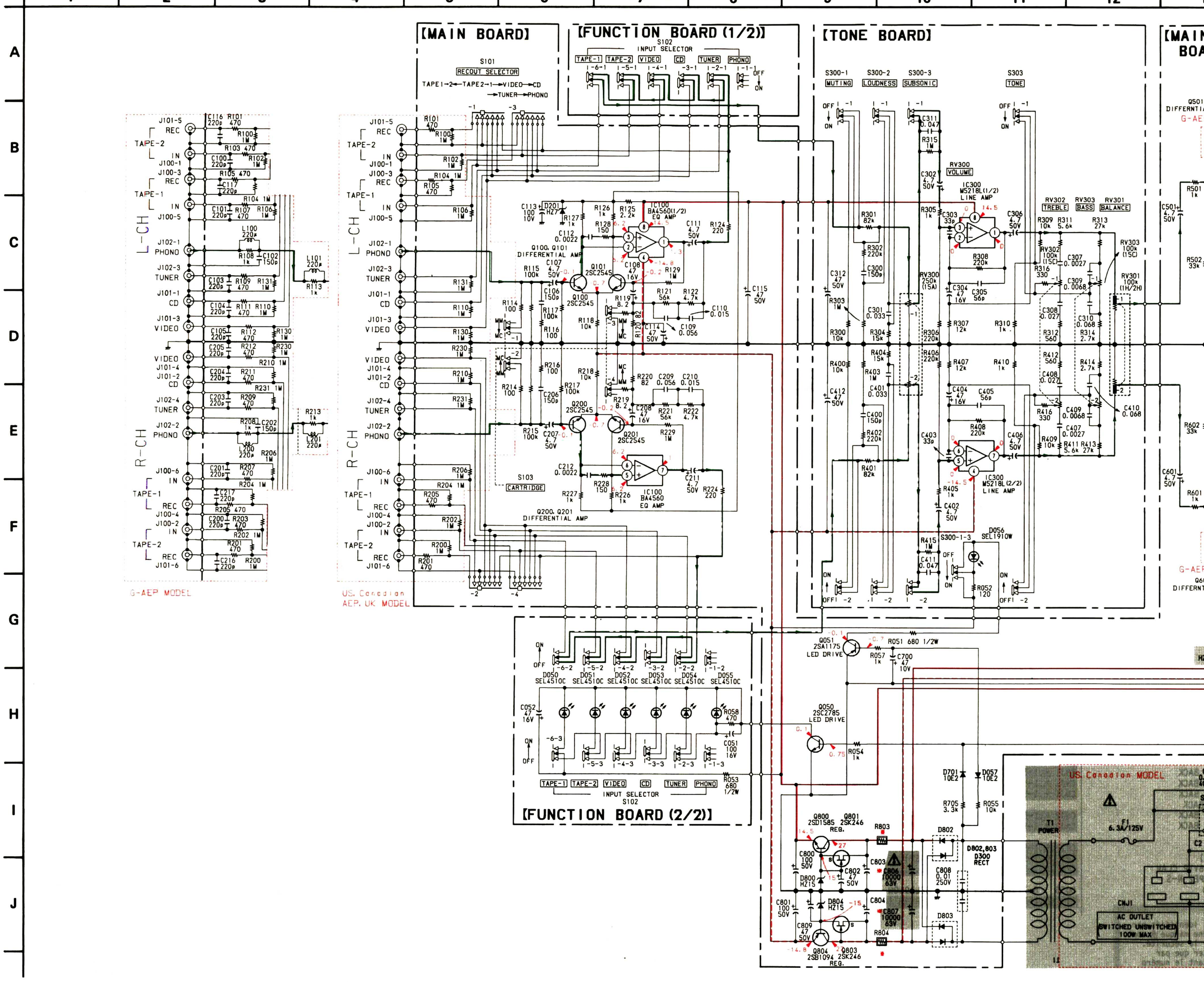

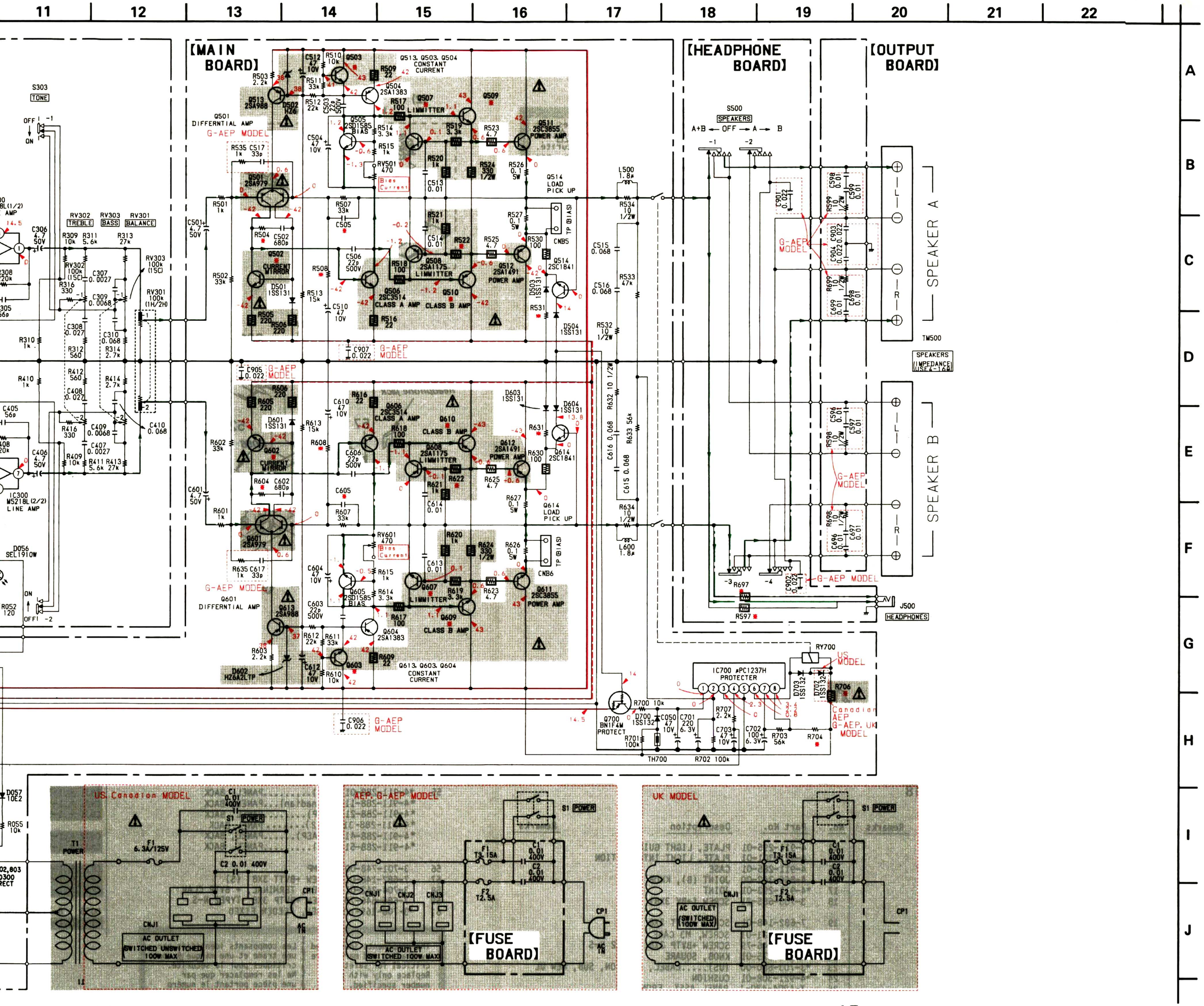
11
12
13
14
15
16
17
18
19
20
21
22
A
B
C
D
E
F
G
H
I
J
[MAIN BOARD]
[HEADPHONE BOARD]
[OUTPUT BOARD]
S303
TONE
RV302 TREBLE
RV303 BASS
RV301 BALANCE
Q501 DIFFERNTIAL AMP
G-AEP MODEL
Q513, Q503, Q504 CONSTANT CURRENT
Q507 LIMMITTER
Q509
Q511 2SC3855 POWER AMP
Q505 2SD1585 BIAS
Q514 LOAD PICK UP
Q508 2SA1175 LIMMITTER
Q506 2SC3514 CLASS A AMP
Q510 CLASS B AMP
Q512 2SA1491 POWER AMP
Q502 CURRENT MIRROR
Q601 DIFFERNTIAL AMP
Q606 2SC3514 CLASS A AMP
Q610 CLASS B AMP
Q608 2SA1175 LIMMITTER
Q612 2SA1491 POWER AMP
Q614 LOAD PICK UP
Q605 2SD1585 BIAS
Q607 LIMMITTER
Q609 CLASS B AMP
Q611 2SC3855 POWER AMP
Q604 2SA1383
Q603
Q613, Q603, Q604 CONSTANT CURRENT
Q602 CURRENT MIRROR
S500 SPEAKERS
A+B ← OFF → A → B
SPEAKER A
SPEAKER B
TM500
SPEAKERS (IMPEDANCE) USE 4~16Ω
J500 HEADPHONES
IC300 M5218L(2/2) LINE AMP
D056 SEL1910W
IC700 μPC1237H PROTECTER
Q700 BN1F4M PROTECT
RY700
US MODEL
Canadian AEP G-AEP, UK MODEL
TH700
R702 100k
US, Canadian MODEL
AEP, G-AEP MODEL
UK MODEL
S1 POWER
T1 POWER
F1 6.3A/125V
F1 T3.15A
F2 T2.5A
C1 0.01 400V
C2 0.01 400V
CNJ1
CNJ2
CNJ3
CP1
AC IN
AC OUTLET (SWITCHED UNSWITCHED 100W MAX)
AC OUTLET (SWITCHED 100W MAX)
[FUSE BOARD]

- Type and value of ※ marking parts differ depending on destinations.

Ref. No.	US, Canadian	AEP, UK	G-AEP
C505	6.8p	←	10p
C605	6.8p	←	10p
C803	470/50V	470/35V	←
C804	470/50V	470/35V	←
Q502	2SC2785	2SC634SP	←
Q503	2SC2785	2SC634SP	←
Q507	2SC2785	2SC634SP	←
Q509	2SC2275A	2SC2275	←
Q510	2SC985A	2SC985	←
Q602	2SC2785	2SC634SP	←
Q603	2SC2785	2SC634SP	←
Q607	2SC2785	2SC634SP	←
Q609	2SC2275A	2SC2275	←
Q610	2SC985A	2SC985	←
R504	330	←	560
R508	1.8k	2.7k	←
R522	2.2k	2.7k	←
R531	15k	4.7k	←
R597	820/2W	470/2W	←
R604	330	←	560
R608	1.8k	2.7k	←
R622	2.2k	2.7k	←
R631	15k	4.7k	←
R697	820/2W	470/2W	←
R704	22k	15k	←
R706	820/3W	560/3W	←
R803	560/3W	470/3W	←
R804	560/3W	470/3W	←

Note: The components identified by shading and mark ⚠ are critical for safety. Replace only with part number specified.

Note: Les composants identifiés par un tramé et une marque ⚠ sont critiques pour la sécurité. Ne les remplacer que par une pièce portant le numéro spécifié.

Note:

- All capacitors are in μF unless otherwise noted. pF: μμF 50WV or less are not indicated except for electrolytics and tantalums.
- All resistors are in Ω and ¼ W or less unless otherwise specified.
- : L-CH signal path.
- : R-CH signal path.
- : nonflammable resistor.
- : B+ bus.
- : B− bus.
- : adjustment for repair.
- Voltages are dc with respect to ground unless otherwise noted.
- Voltage variations may be noted due to normal production tolerances.
- Readings are taken under no-signal conditions with a VOM (50 kΩ/V).

- Switch

Ref. No.	Switch	Position
S1	POWER	OFF
S101	REC OUT SELECTOR	TAPE1 → 2
S102-1	PHONO	OFF
S102-2	TUNER	OFF
S102-3	CD	ON
S102-4	VIDEO	OFF
S102-5	TAPE 2/DAT	OFF
S102-6	TAPE 1	OFF
S103	CARTRIDGE	MM
S300-1	MUTING	OFF
S300-2	LOUDNESS	OFF
S300-3	SUBSONIC	OFF
S303	TONE	OFF
S500	SPEAKERS	OFF

- **IC700 (μPC1237HA) BLOCK DIAGRAM**

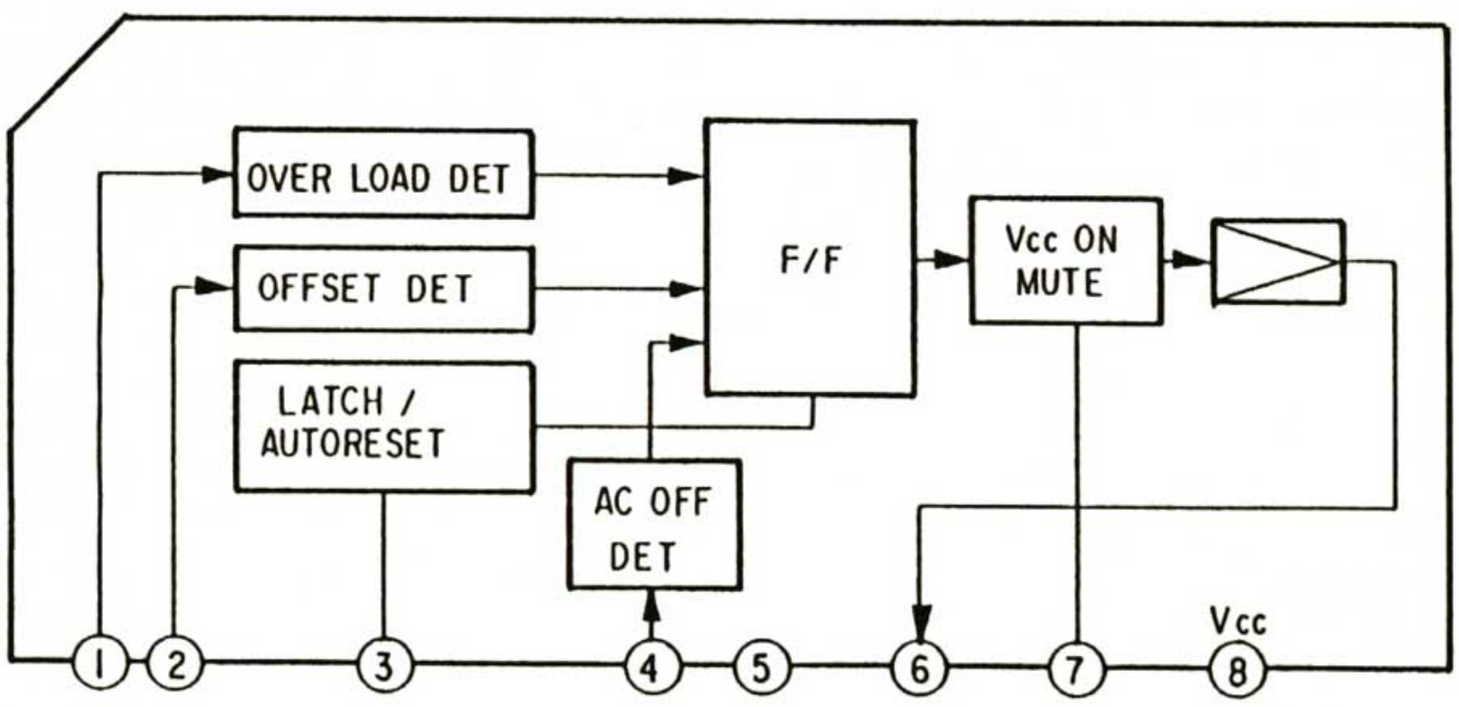

www.hifiengine.com

SECTION 3
EXPLODED VIEWS AND PARTS LIST

NOTE:
- The mechanical parts with no reference number in the exploded views are not supplied.
- Items marked " ★ " are not stocked since they are seldom required for routine service. Some delay should be anticipated when ordering these items.
- The construction parts of an assembled part are indicated with a collation number on the remark column.

The components identified by shading and mark ⚠ are critical for safety. Replace only with part number specified.

Les composants identifiés par une trame et une marque ⚠ sont critiques pour la sécurité. Ne les remplacer que par une pièce portant le numéro spécifié.

(1)

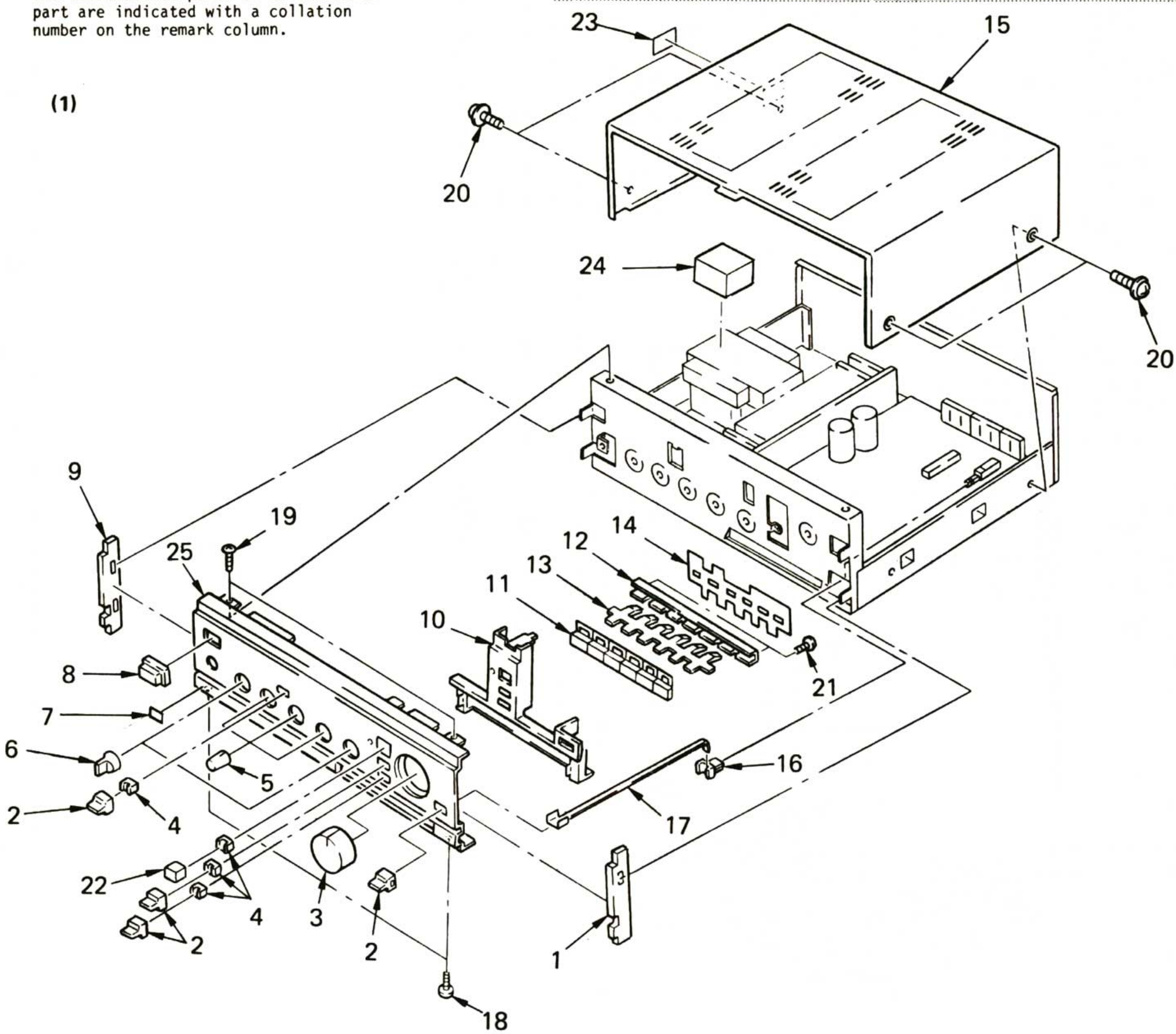

No.	Part No.	Description	Remarks
1	*4-911-296-01	PANEL (RIGHT), SIDE	
2	3-315-105-21	KNOB (5X16), SQUARE	
3	X-4919-703-1	KNOB (VOL) ASSY	
4	*4-864-307-00	RING	
5	4-916-746-01	KNOB (DIA.21)	
6	4-916-745-01	KNOB (DIA.21)	
7	3-703-713-41	STICKER, SONY SYMBOL (10)	
8	4-917-460-01	KNOB, POWER	
9	4-911-297-01	PANEL (LEFT), SIDE	
10	4-921-304-01	ESCUTCHEON	
11	X-4904-478-1	BUTTON ASSY	
12	*4-911-292-01	BRACKET	

No.	Part No.	Description	Remarks
13	4-911-295-01	PLATE, LIGHT GUIDE	
14	4-921-301-01	PLATE, LIGHT INTERCEPTION	
15	4-911-285-01	CASE	
16	4-866-342-00	JOINT (B), KNOB	
17	*4-911-293-01	JOINT	
18	3-703-685-21	SCREW (+BV 3X8)	
19	7-682-148-01	SCREW +BVTT 3X8 (S)	
20	4-886-821-01	SCREW, M3 CASE	
21	7-685-646-79	SCREW +BVTP 3X8 TYPE2 N-S	
22	4-908-875-01	KNOB, SQUARE	
23	*3-703-680-00	(US).....LABEL, CAUTION, SUB, NEW UL	
24	*4-921-308-01	CUSHION	
25	X-4904-480-1	PANEL ASSY, FRONT	

www.hifiengine.com

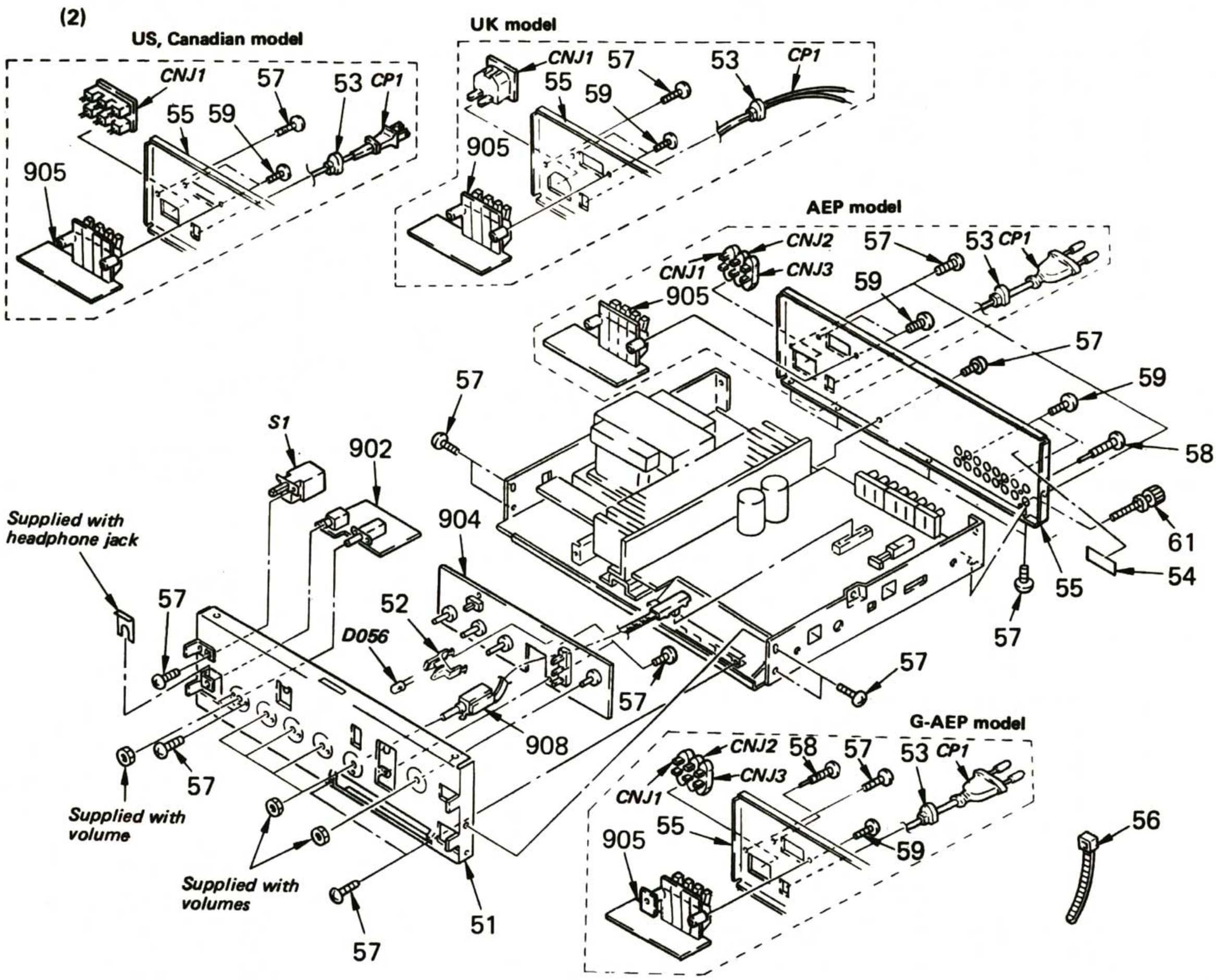

No.	Part No.	Description	Remarks
51	*4-921-306-01	CHASSIS, AMPLIFIER	
52	*4-919-716-01	HOLDER, LED	
53	*3-703-244-00	BUSHING (2104), CORD	
54	*3-701-030-00	LABEL, SERIAL NUMBER	
55	*4-911-288-01	(US).....PANEL, BACK	
	*4-911-288-11	(Canadian)...PANEL, BACK	
	*4-911-288-21	(AEP).....PANEL, BACK	
	*4-911-288-31	(AE2)..... PANEL, BACK	
	*4-911-288-41	(G-AEP).....PANEL, BACK	
	*4-911-288-51	(UK).....PANEL, BACK	
56	3-701-748-00	CLAMP	
57	7-682-148-01	SCREW +BVTT 3X8 (S)	
58	3-704-242-01	SCREW, TERMINAL, + BVTP CLAW	
59	7-685-646-79	SCREW +BVTP 3X8 TYPE2 N-S	
61	*3-706-165-00	SCREW, FEEDER FIXED	

The components identified by shading and mark ⚠ are critical for safety. Replace only with part number specified.

Les composants identifiés par une trame et une marque ⚠ sont critiques pour la sécurité. Ne les remplacer que par une pièce portant le numéro spécifié.

No.	Part No.	Description	Remarks
902	*1-623-045-11	PC BOARD, H.P	
904	*1-623-048-11	PC BOARD, TONE	
905	*1-623-049-11	PC BOARD, OUTPUT	
908	1-571-110-11	SWITCH, ROTARY SLIDE	
CNJ1	⚠.1-526-751-00	(UK).....OUTLET, AC	
CNJ1	⚠.1-526-794-11	(AEP,G-AEP).....OUTLET, AC	
CNJ1	⚠.1-526-896-00	(US,Canadian)...OUTLET, AC	
CNJ2	⚠.1-526-794-11	(AEP,G-AEP).....OUTLET, AC	
CNJ3	⚠.1-526-794-11	(AEP,G-AEP).....OUTLET, AC	
CP1	⚠.1-558-942-11	(US,Canadian)...CORD, POWER (POLAR.SPT-2)	
CP1	⚠.1-558-944-11	(AEP,G-AEP).....CORD, POWER	
CP1	⚠.1-558-946-11	(UK).....CORD, POWER	
D056	8-719-303-59	DIODE SEL1910W	
S1	⚠.1-554-880-11	SWITCH, PUSH (AC POWER)(1 KEY)	

www.hifiengine.com

(3)

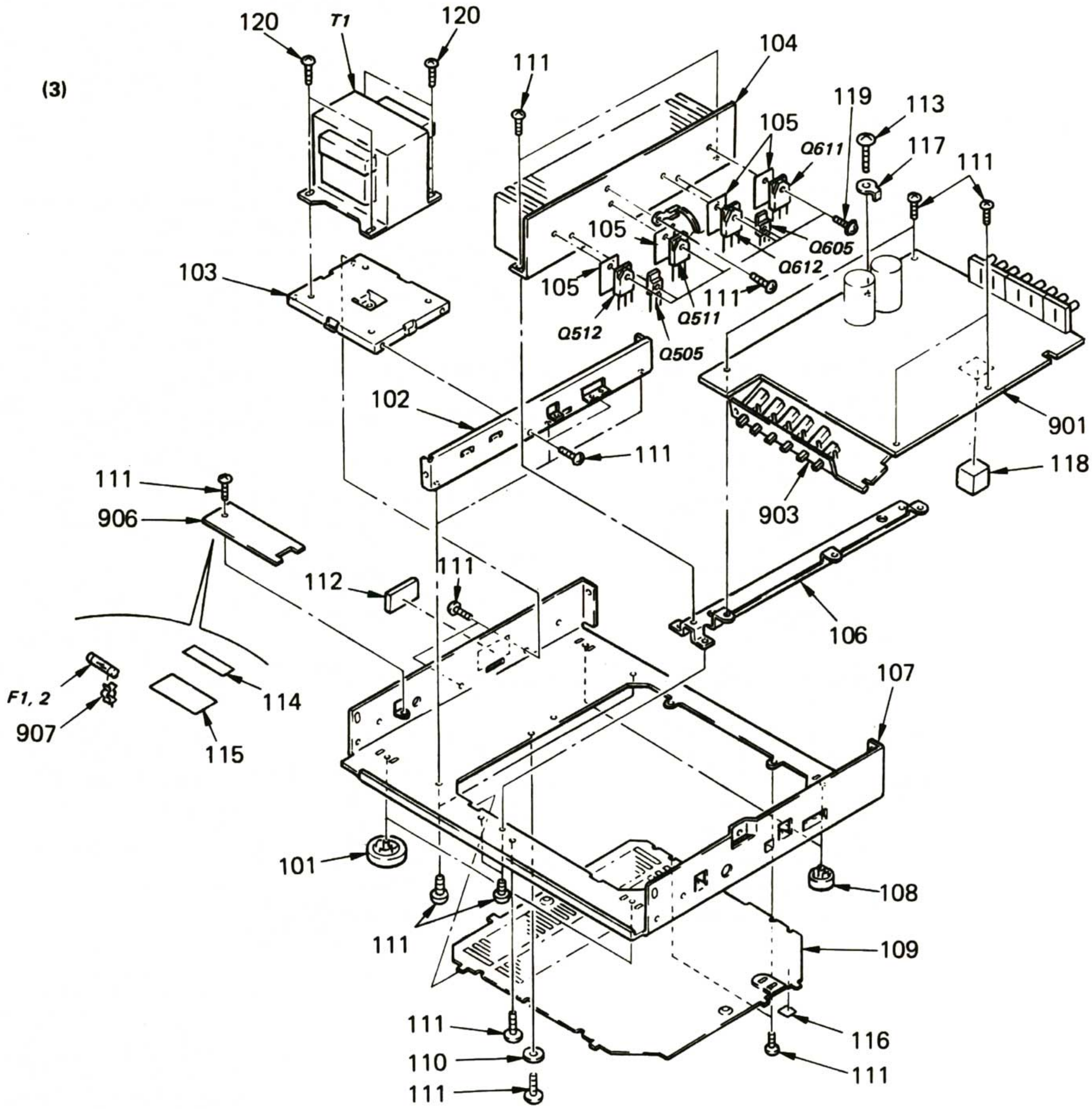

No.	Part No.	Description	Remarks
101	X-3337-104-1	FOOT ASSY, ORNAMENTAL	
102	*4-911-238-01	FRAME	
103	*4-911-294-01	BRACKET (TRANSFORMER)	
104	*4-911-284-01	HEAT SINK	
105	4-911-232-01	SHEET, INSULATING	
106	*4-911-280-01	BRACKET (H)	
107	*4-911-244-01	CHASSIS, MAIN	
108	X-4864-303-0	FOOT ASSY	
109	*4-911-283-01	(US,AEP,G-AEP,UK)...PLATE, BOTTOM	
	4-911-283-11	(Canadian).....PLATE, BOTTOM	
110	4-890-173-00	WASHER	
111	7-682-148-01	SCREW +BVTT 3X8 (S)	
112	9-911-845-XX	SPACER	
113	3-703-685-21	SCREW (+BV 3X8)	
114	3-701-946-28	(US,Canadian)...LABEL, FUSE	
115	*3-703-044-26	(US,Canadian)...LABEL, CAUTION	

The components identified by shading and mark ⚠ are critical for safety. Replace only with part number specified.

Les composants identifiés par une trame et une marque ⚠ sont critiques pour la sécurité. Ne les remplacer que par une pièce portant le numéro spécifié.

No.	Part No.	Description	Remarks
116	*3-703-680-00	(US)...LABEL, CAUTION, SUB, NEW UL	
117	4-870-539-00	PLATE, GROUND	
118	*4-921-309-01	CUSHION	
119	7-682-649-09	SCREW +PSW 3X10	
120	7-682-560-04	SCREW +BVTT 4X6 (S)	
901	*A-4388-661-A	MOUNTED PCB, MAIN	
903	*1-623-046-12	PC BOARD, FUNCTION	
906	*1-623-050-11	PC BOARD, FUSE	
907	1-533-183-11	HOLDER, FUSE	
F1	⚠.1-532-237-00	(AEP,G-AEP,UK)...FUSE, TIME-LAG T3.15A	
F2	⚠.1-532-286-00	(AEP,G-AEP,UK)...FUSE, TIME-LAG T2.5A	
F1	⚠.1-532-748-11	(US,Canadian)....FUSE, GLASS TUBE 6.3A	
Q505	8-729-107-25	TRANSISTOR 2SD1585-L	
Q511	⚠.8-729-304-32	TRANSISTOR 2SC3855	
Q512	⚠.8-729-304-29	TRANSISTOR 2SA1491	
Q605	8-729-107-25	TRANSISTOR 2SD1585-L	
Q611	⚠.8-729-304-32	TRANSISTOR 2SC3855	
Q612	⚠.8-729-304-29	TRANSISTOR 2SA1491	
T1	⚠.1-448-950-11	(US,Canadian)....TRANSFORMER, POWER	
T1	⚠.1-448-951-11	(AEP,G-AEP,UK)...TRANSFORMER, POWER	

www.hifiengine.com

SECTION 4
ELECTRICAL PARTS LIST

NOTE:
- Items marked " ★ " are not stocked since they are seldom required for routine service. Some delay should be anticipated when ordering these items.
- If there are two or more same circuitsin a set such as a stereophonic machine, only typical circuit parts may be indicated and capacitors and resistors in other same circuits may be omitted.

CAPACITORS:
MF:μF, PF:μμF.

RESISTORS
- All resistors are in ohms.
- F : nonflammable

COILS
- MMH : mH, UH : μH

SEMICONDUCTORS
In each case, U : μ, for example:
UA...: μA..., UPA...: μPA..., UPC...: μPC, UPD...: μPD...

The components identified by shading and mark ⚠ are critical for safety. Replace only with part number specified.

Les composants identifiés par une trame et une marque ⚠ sont critiques pour la sécurité. Ne les remplacer que par une pièce portant le numéro spécifié.

ELECTRICAL PARTS

Ref.No.	Part No.	Description			
901	*A-4388-661-A	MOUNTED PCB, MAIN			
902	*1-623-045-11	PC BOARD, H.P			
903	*1-623-046-11	PC BOARD, FUNCTION			
904	*1-623-048-11	PC BOARD, TONE			
905	*1-623-049-11	PC BOARD, OUTPUT			
906	*1-623-050-11	PC BOARD, FUSE			
907	1-533-183-11	HOLDER, FUSE			
908	1-571-110-11	SWITCH, ROTARY SLIDE			
C1	⚠.1-161-744-00	CERAMIC	0.01MF		400V
C2	⚠.1-161-744-00	CERAMIC	0.01MF		400V
C050	1-124-446-11	ELECT	47MF	20%	10V
C051	1-124-445-00	ELECT	100MF	20%	16V
C052	1-124-477-11	ELECT	47MF	20%	16V
C100	1-162-286-31	(G-AEP)...CERAMIC	220PF	10%	50V
C101	1-162-286-31	(G-AEP)...CERAMIC	220PF	10%	50V
C102	1-162-284-31	(G-AEP)...CERAMIC	150PF	10%	50V
C103	1-162-286-31	(G-AEP)...CERAMIC	220PF	10%	50V
C104	1-162-286-31	(G-AEP)...CERAMIC	220PF	10%	50V
C105	1-162-286-31	(G-AEP)...CERAMIC	220PF	10%	50V
C106	1-162-284-31	CERAMIC	150PF	10%	50V
C107	1-124-927-11	ELECT	4.7MF	20%	50V
C108	1-124-477-11	ELECT	47MF	20%	16V
C109	1-136-162-00	FILM	0.056MF	5%	50V
C110	1-136-155-00	FILM	0.015MF	5%	50V
C111	1-124-927-11	ELECT	4.7MF	20%	50V
C112	1-161-375-00	CERAMIC	0.0022MF	30%	16V
C113	1-124-443-00	ELECT	100MF	20%	10V
C114	1-124-910-11	ELECT	47MF	20%	50V
C115	1-124-910-11	ELECT	47MF	20%	50V
C116	1-162-286-31	(G-AEP)...CERAMIC	220PF	10%	50V
C117	1-162-286-31	(G-AEP)...CERAMIC	220PF	10%	50V
C200	1-162-286-31	(G-AEP)...CERAMIC	220PF	10%	50V
C201	1-162-286-31	(G-AEP)...CERAMIC	220PF	10%	50V
C202	1-162-284-31	(G-AEP)...CERAMIC	150PF	10%	50V
C203	1-162-286-31	(G-AEP)...CERAMIC	220PF	10%	50V
C204	1-162-286-31	(G-AEP)...CERAMIC	220PF	10%	50V
C205	1-162-286-31	(G-AEP)...CERAMIC	220PF	10%	50V
C206	1-162-284-31	CERAMIC	150PF	10%	50V
C207	1-124-927-11	ELECT	4.7MF	20%	50V
C208	1-124-477-11	ELECT	47MF	20%	16V
C209	1-136-162-00	FILM	0.056MF	5%	50V
C210	1-136-155-00	FILM	0.015MF	5%	50V
C211	1-124-927-11	ELECT	4.7MF	20%	50V
C212	1-161-375-00	CERAMIC	0.0022MF	30%	16V

ELECTRICAL PARTS

Ref.No.	Part No.	Description			
C216	1-162-286-31	(G-AEP)...CERAMIC	220PF	10%	50V
C217	1-162-286-31	(G-AEP)...CERAMIC	220PF	10%	50V
C300	1-161-270-00	CERAMIC	82PF	5%	50V
C301	1-136-159-00	FILM	0.033MF	5%	50V
C302	1-124-259-00	ELECT	4.7MF	20%	50V
C303	1-162-211-31	CERAMIC	33PF	5%	50V
C304	1-124-236-00	ELECT	47MF	20%	16V
C305	1-162-217-31	CERAMIC	56PF	5%	50V
C306	1-124-259-00	ELECT	4.7MF	20%	50V
C307	1-130-476-00	MYLAR	0.0027MF	5%	50V
C308	1-136-158-00	FILM	0.027MF	5%	50V
C309	1-130-481-00	MYLAR	0.0068MF	5%	50V
C310	1-136-163-00	FILM	0.068MF	5%	50V
C311	1-136-161-00	FILM	0.047MF	5%	50V
C312	1-124-910-11	ELECT	47MF	20%	50V
C400	1-161-270-00	CERAMIC	82PF	5%	50V
C401	1-136-159-00	FILM	0.033MF	5%	50V
C402	1-124-259-00	ELECT	4.7MF	20%	50V
C403	1-162-211-31	CERAMIC	33PF	5%	50V
C404	1-124-236-00	ELECT	47MF	20%	16V
C405	1-162-217-31	CERAMIC	56PF	5%	50V
C406	1-124-259-00	ELECT	4.7MF	20%	50V
C407	1-130-476-00	MYLAR	0.0027MF	5%	50V
C408	1-136-158-00	FILM	0.027MF	5%	50V
C409	1-130-481-00	MYLAR	0.0068MF	5%	50V
C410	1-136-163-00	FILM	0.068MF	5%	50V
C411	1-136-161-00	FILM	0.047MF	5%	50V
C412	1-124-910-11	ELECT	47MF	20%	50V
C501	1-124-927-11	ELECT	4.7MF	20%	50V
C502	1-162-292-31	CERAMIC	680PF	10%	50V
C503	1-161-959-00	CERAMIC	22PF	10%	500V
C504	1-124-446-11	ELECT	47MF	20%	10V
C505	1-161-259-00	(G-AEP)...CERAMIC	10PF	5%	50V
C505	1-162-197-31	(US,Canadian,AEP,UK) ...CERAMIC	6.8PF	10%	50V
C506	1-161-959-00	CERAMIC	22PF	10%	500V
C510	1-124-446-11	ELECT	47MF	20%	10V
C512	⚠.1-124-446-11	ELECT	47MF	20%	10V
C513	1-136-153-00	FILM	0.01MF	5%	50V
C514	1-136-153-00	FILM	0.01MF	5%	50V
C515	1-136-163-00	FILM	0.068MF	5%	50V
C516	1-136-163-00	FILM	0.068MF	5%	50V
C517	1-161-265-00	(G-AEP)...CERAMIC	33PF	5%	50V
C596	1-136-153-00	(G-AEP)...FILM	0.01MF	5%	50V

www.hifiengine.com

ELECTRICAL PARTS

Ref.No.	Part No.	Description
C597	1-136-153-00	(G-AEP)...FILM 0.01MF 5% 50V
C598	1-136-153-00	(G-AEP)...FILM 0.01MF 5% 50V
C599	1-136-153-00	(G-AEP)...FILM 0.01MF 5% 50V
C601	1-124-927-11	ELECT 4.7MF 20% 50V
C602	1-162-292-31	CERAMIC 680PF 10% 50V
C603	1-161-959-00	CERAMIC 22PF 10% 500V
C604	1-124-446-11	ELECT 47MF 20% 10V
C605	1-161-259-00	(G-AEP)...CERAMIC 10PF 5% 50V
C605	1-162-197-31	(US,Canadian,AEP,UK) ...CERAMIC 6.8PF 10% 50V
C606	1-161-959-00	CERAMIC 22PF 10% 500V
C610	1-124-446-11	ELECT 47MF 20% 10V
C612 ⚠	1-124-446-11	ELECT 47MF 20% 10V
C613	1-136-153-00	FILM 0.01MF 5% 50V
C614	1-136-153-00	FILM 0.01MF 5% 50V
C615	1-136-163-00	FILM 0.068MF 5% 50V
C616	1-136-163-00	FILM 0.068MF 5% 50V
C617	1-161-265-00	(G-AEP)...CERAMIC 33PF 5% 50V
C696	1-136-153-00	(G-AEP)...FILM 0.01MF 5% 50V
C697	1-136-153-00	(G-AEP)...FILM 0.01MF 5% 50V
C698	1-136-153-00	(G-AEP)...FILM 0.01MF 5% 50V
C699	1-136-153-00	(G-AEP)...FILM 0.01MF 5% 50V
C700	1-124-446-11	ELECT 47MF 20% 10V
C701	1-124-444-00	ELECT 220MF 20% 6.3V
C702	1-124-468-11	ELECT 100MF 20% 6.3V
C703	1-124-446-11	ELECT 47MF 20% 10V
C800	1-124-122-11	ELECT 100MF 20% 50V
C801	1-124-122-11	ELECT 100MF 20% 50V
C802	1-124-910-11	ELECT 47MF 20% 50V
C803	1-126-104-11	(AEP,G-AEP,UK) ...ELECT 470MF 20% 35V
C803	1-124-913-11	(US,Canadian) ...ELECT 470MF 20% 50V
C804	1-126-104-11	(AEP,G-AEP,UK) ...ELECT 470MF 20% 35V
C804	1-124-913-11	(US,Canadian) ...ELECT 470MF 20% 50V
C806 ⚠	1-125-479-11	ELECT(BLOCK) 10000MF 20% 63V
C807 ⚠	1-125-479-11	ELECT(BLOCK) 10000MF 20% 63V
C808	1-102-355-00	CERAMIC 0.01MF 250V
C809	1-124-910-11	ELECT 47MF 20% 50V
C901	1-161-494-00	(G-AEP)...CERAMIC 0.022MF 30% 25V
C902	1-161-494-00	(G-AEP)...CERAMIC 0.022MF 30% 25V
C903	1-161-494-00	(G-AEP)...CERAMIC 0.022MF 30% 25V
C904	1-161-494-01	(G-AEP)...CERAMIC 0.022MF 30% 25V
C905	1-161-494-00	(G-AEP)...CERAMIC 0.022MF 30% 25V
C906	1-101-005-00	(G-AEP)...CERAMIC 0.022MF Z% 50V
C907	1-101-005-00	(G-AEP)...CERAMIC 0.022MF Z% 50V
CN301	*1-566-451-11	HOUSING, CONNECTOR 3P
CN302	*1-566-452-11	HOUSING, CONNECTOR 7P
CN303	*1-566-452-11	HOUSING, CONNECTOR 7P
CN304	*1-566-451-11	HOUSING, CONNECTOR 3P
CNB1	*1-535-140-00	(AEP,G-AEP,UK) ...BASE POST 22MM (10MM PITCH) 3P
CNB1	*1-535-139-00	(US,Canadian) ...BASE POST 22MM (10MM PITCH) 2P
CNB2	*1-535-141-00	BASE POST 22MM (10MM PITCH) 4P
CNB3	*1-535-116-00	TERMINAL
CNB4	*1-535-117-00	TERMINAL

The components identified by shading and mark ⚠ are critical for safety. Replace only with part number specified.

Les composants identifiés par une trame et une marque ⚠ sont critiques pour la sécurité. Ne les remplacer que par une pièce portant le numéro spécifié.

ELECTRICAL PARTS

Ref.No.	Part No.	Description
CNB5	*1-535-115-00	TERMINAL
CNB6	*1-535-115-00	TERMINAL
CNB7	*1-535-115-00	TERMINAL
CNB8	*1-535-117-00	TERMINAL
CNB9	*1-535-117-00	TERMINAL
CNB10	*1-535-118-00	TERMINAL
CNB11	*1-535-118-00	TERMINAL
CNJ1 ⚠	1-526-751-00	(UK).....OUTLET, AC
CNJ1 ⚠	1-526-794-11	(AEP,G-AEP).....OUTLET, AC
CNJ1 ⚠	1-526-896-00	(US,Canadian)...OUTLET, AC
CNJ2 ⚠	1-526-794-11	(AEP,G-AEP).....OUTLET, AC
CNJ3 ⚠	1-526-794-11	(AEP,G-AEP).....OUTLET, AC
CP1 ⚠	1-558-942-11	(US,Canadian)..CORD, POWER(POLAR.SPT-2)
CP1 ⚠	1-558-944-11	(AEP,G-AEP)....CORD, POWER
CP1 ⚠	1-558-946-11	(UK).....CORD, POWER
D050	8-719-303-64	DIODE SEL4510C-C
D051	8-719-303-64	DIODE SEL4510C-C
D052	8-719-303-64	DIODE SEL4510C-C
D053	8-719-303-64	DIODE SEL4510C-C
D054	8-719-303-64	DIODE SEL4510C-C
D055	8-719-303-64	DIODE SEL4510C-C
D056	8-719-303-59	DIODE SEL1910W
D057	8-719-200-77	DIODE 10E2N
D201	8-719-910-75	DIODE HZ7B2L
D501	8-719-940-76	DIODE 1SS132
D502 ⚠	8-719-910-62	DIODE HZ6A2L
D503	8-719-940-76	DIODE 1SS132
D504	8-719-940-76	DIODE 1SS132
D601	8-719-940-76	DIODE 1SS132
D602 ⚠	8-719-910-62	DIODE HZ6A2L
D603	8-719-940-76	DIODE 1SS132
D604	8-719-940-76	DIODE 1SS132
D700	8-719-940-76	DIODE 1SS132
D701	8-719-200-77	DIODE 10E2N
D702	8-719-940-76	DIODE 1SS132
D703	8-719-940-76	DIODE 1SS132
D800	8-719-910-52	DIODE HZ15-2L
D802	8-719-200-80	DIODE D300
D803	8-719-200-80	DIODE D300
D804	8-719-910-52	DIODE HZ15-2L
F1 ⚠	1-532-748-11	(US,Canadian)....FUSE, GLASS TUBE 6.3A
F1 ⚠	1-532-237-00	(AEP,G-AEP,UK)...FUSE, TIME-LAG T3.15A
F2 ⚠	1-532-286-00	(AEP,G-AEP,UK)...FUSE, TIME-LAG T2.5A
IC100	8-759-923-90	IC BA4560
IC300	8-759-600-02	IC M5218L
IC700	8-759-101-23	IC UPC1237HA
J100	1-507-911-11	JACK, PIN 6P
J101	1-507-911-11	JACK, PIN 6P
J102	1-507-788-00	JACK, PIN 4P
J500	1-507-855-00	JACK, LARGE TYPE (HEADPHONES)
L100	1-413-101-00	(G-AEP)...COIL, INPUT 220M
L101	1-413-101-00	(G-AEP)...COIL, INPUT 220M
L200	1-413-101-00	(G-AEP)...COIL, INPUT 220M
L201	1-413-101-00	(G-AEP)...COIL, INPUT 220M
L500	*1-420-872-00	COIL, AIR CORE
L600	*1-420-872-00	COIL, AIR CORE
Q050	8-729-600-27	TRANSISTOR 2SC634SP
Q051	8-729-117-54	TRANSISTOR 2SA1175
Q100	8-729-354-52	TRANSISTOR 2SC2545

www.hifiengine.com

ELECTRICAL PARTS

Ref.No.	Part No.	Description
Q101	8-729-354-52	TRANSISTOR 2SC2545
Q200	8-729-354-52	TRANSISTOR 2SC2545
Q201	8-729-354-52	TRANSISTOR 2SC2545
Q501 ⚠	8-729-697-92	TRANSISTOR 2SA979
Q502 ⚠	8-729-178-54	(US,Canadian)....TRANSISTOR 2SC2785
Q502 ⚠	8-729-600-27	(AEP,G-AEP,UK)...TRANSISTOR 2SC634SP
Q503 ⚠	8-729-178-54	(US,Canadian)....TRANSISTOR 2SC2785
Q503	8-729-600-27	(AEP,G-AEP,UK)...TRANSISTOR 2SC634SP
Q504	8-729-104-91	TRANSISTOR 2SA1383
Q505	8-729-107-25	TRANSISTOR 2SD1585-L
Q506 ⚠	8-729-104-18	TRANSISTOR 2SC3514
Q507 ⚠	8-729-178-54	(US,Canadian)....TRANSISTOR 2SC2785
Q507 ⚠	8-729-600-27	(AEP,G-AEP,UK)...TRANSISTOR 2SC634SP
Q508 ⚠	8-729-117-54	TRANSISTOR 2SA1175
Q509 ⚠	8-729-107-53	(US,Canadian)....TRANSISTOR 2SC2275A
Q509 ⚠	8-729-127-53	(AEP,G-AEP,UK)...TRANSISTOR 2SC2275
Q510 ⚠	8-729-118-52	(AEP,G-AEP,UK)...TRANSISTOR 2SA985
Q510 ⚠	8-729-190-53	(US,Canadian)....TRANSISTOR 2SA985A
Q511 ⚠	8-729-304-32	TRANSISTOR 2SC3855
Q512 ⚠	8-729-304-29	TRANSISTOR 2SA1491
Q513 ⚠	8-729-108-14	TRANSISTOR 2SA988
Q514	8-729-108-05	TRANSISTOR 2SC1841-PA
Q601 ⚠	8-729-697-92	TRANSISTOR 2SA979
Q602 ⚠	8-729-178-54	(US,Canadian)....TRANSISTOR 2SC2785
Q602 ⚠	8-729-600-27	(AEP,G-AEP,UK)...TRANSISTOR 2SC634SP
Q603	8-729-178-54	(US,Canadian)....TRANSISTOR 2SC2785
Q603 ⚠	8-729-600-27	(AEP,G-AEP,UK)...TRANSISTOR 2SC634SP
Q604	8-729-104-91	TRANSISTOR 2SA1383
Q605	8-729-107-25	TRANSISTOR 2SD1585-L
Q606 ⚠	8-729-104-18	TRANSISTOR 2SC3514
Q607 ⚠	8-729-178-54	(US,Canadian)....TRANSISTOR 2SC2785
Q607 ⚠	8-729-600-27	(AEP,G-AEP,UK)...TRANSISTOR 2SC634SP
Q608 ⚠	8-729-117-54	TRANSISTOR 2SA1175
Q609 ⚠	8-729-107-53	(US,Canadian)....TRANSISTOR 2SC2275A
Q609 ⚠	8-729-127-53	(AEP,G-AEP,UK)...TRANSISTOR 2SC2275
Q610 ⚠	8-729-118-52	(AEP,G-AEP,UK)...TRANSISTOR 2SA985
Q610 ⚠	8-729-190-53	(US,Canadian)....TRANSISTOR 2SA985A
Q611 ⚠	8-729-304-32	TRANSISTOR 2SC3855
Q612 ⚠	8-729-304-29	TRANSISTOR 2SA1491
Q613 ⚠	8-729-108-14	TRANSISTOR 2SA988
Q614	8-729-108-05	TRANSISTOR 2SC1841-PA
Q700	8-729-806-16	TRANSISTOR 2SA1346
Q800	8-729-107-25	TRANSISTOR 2SD1585-L
Q801	8-729-202-67	TRANSISTOR 2SK246GR3
Q803	8-729-202-67	TRANSISTOR 2SK246GR3
Q804	8-729-111-67	TRANSISTOR 2SB1094-L
R051	1-247-750-11	CARBON 680 5% 1/2W
R052	1-247-701-11	CARBON 120 5% 1/4W
R053	1-247-750-11	CARBON 680 5% 1/2W
R054	1-247-713-11	CARBON 1K 5% 1/4W
R055	1-247-725-11	CARBON 10K 5% 1/4W
R057	1-247-713-11	CARBON 1K 5% 1/4W
R058	1-247-708-11	CARBON 470 5% 1/4W
R100	1-215-493-00	CARBON 1M 5% 1/6W
R101	1-249-413-11	CARBON 470 5% 1/6W

The components identified by shading and mark ⚠ are critical for safety. Replace only with part number specified.

Les composants identifiés par une trame et une marque ⚠ sont critiques pour la sécurité. Ne les remplacer que par une pièce portant le numéro spécifié.

ELECTRICAL PARTS

Ref.No.	Part No.	Description
R102	1-215-493-00	CARBON 1M 5% 1/6W
R103	1-249-413-11	(G-AEP)...CARBON 470 5% 1/6W
R104	1-215-493-00	CARBON 1M 5% 1/6W
R105	1-249-413-11	CARBON 470 5% 1/6W
R106	1-215-493-00	CARBON 1M 5% 1/6W
R107	1-249-413-11	(G-AEP)...CARBON 470 5% 1/6W
R108	1-249-417-11	(G-AEP)...CARBON 1K 5% 1/6W
R109	1-249-413-11	(G-AEP)...CARBON 470 5% 1/6W
R110	1-215-493-00	CARBON 1M 5% 1/6W
R111	1-249-413-11	(G-AEP)...CARBON 470 5% 1/6W
R112	1-249-413-11	(G-AEP)...CARBON 470 5% 1/6W
R113	1-249-417-11	(G-AEP)...CARBON 1K 5% 1/6W
R114	1-249-405-11	CARBON 100 5% 1/6W
R115	1-249-441-11	CARBON 100K 5% 1/6W
R116	1-249-405-11	CARBON 100 5% 1/6W
R117	1-249-441-11	CARBON 100K 5% 1/6W
R118	1-249-429-11	CARBON 10K 5% 1/6W
R119	1-249-392-11	CARBON 8.2 5% 1/6W
R120	1-249-404-00	CARBON 82 5% 1/6W
R121	1-249-438-11	CARBON 56K 5% 1/6W
R122	1-249-425-11	CARBON 4.7K 5% 1/6W
R124	1-249-409-11	CARBON 220 5% 1/6W
R125	1-249-421-11	CARBON 2.2K 5% 1/6W
R126	1-249-417-11	CARBON 1K 5% 1/6W
R127	1-249-417-11	CARBON 1K 5% 1/6W
R128	1-249-407-11	CARBON 150 5% 1/6W
R129	1-215-493-00	CARBON 1M 5% 1/6W
R130	1-215-493-00	CARBON 1M 5% 1/6W
R131	1-215-493-00	CARBON 1M 5% 1/6W
R200	1-215-493-00	CARBON 1M 5% 1/6W
R201	1-249-413-11	CARBON 470 5% 1/6W
R202	1-215-493-00	CARBON 1M 5% 1/6W
R203	1-249-417-11	(G-AEP)...CARBON 1K 5% 1/6W
R204	1-215-493-00	CARBON 1M 5% 1/6W
R205	1-249-413-11	CARBON 470 5% 1/6W
R206	1-215-493-00	CARBON 1M 5% 1/6W
R207	1-249-417-11	(G-AEP)...CARBON 1K 5% 1/6W
R208	1-249-417-11	(G-AEP)...CARBON 1K 5% 1/6W
R209	1-249-417-11	(G-AEP)...CARBON 1K 5% 1/6W
R210	1-215-493-00	CARBON 1M 5% 1/6W
R211	1-249-417-11	(G-AEP)...CARBON 1K 5% 1/6W
R212	1-249-417-11	(G-AEP)...CARBON 1K 5% 1/6W
R213	1-249-417-11	(G-AEP)...CARBON 1K 5% 1/6W
R214	1-249-405-11	CARBON 100 5% 1/6W
R215	1-249-441-11	CARBON 100K 5% 1/6W
R216	1-249-405-11	CARBON 100 5% 1/6W
R217	1-249-441-11	CARBON 100K 5% 1/6W
R218	1-249-429-11	CARBON 10K 5% 1/6W
R219	1-249-392-11	CARBON 8.2 5% 1/6W
R220	1-249-404-00	CARBON 82 5% 1/6W
R221	1-249-438-11	CARBON 56K 5% 1/6W
R222	1-249-425-11	CARBON 4.7K 5% 1/6W
R224	1-249-409-11	CARBON 220 5% 1/6W
R226	1-249-417-11	CARBON 1K 5% 1/6W
R227	1-249-417-11	CARBON 1K 5% 1/6W
R228	1-249-407-11	CARBON 150 5% 1/6W
R229	1-215-493-00	CARBON 1M 5% 1/6W

www.hifiengine.com

ELECTRICAL PARTS

Ref.No.	Part No.	Description			
R230	1-215-493-00	CARBON	1M	5%	1/6W
R231	1-215-493-00	CARBON	1M	5%	1/6W
R300	1-247-725-11	CARBON	10K	5%	1/4W
R301	1-249-468-11	CARBON	82K	5%	1/4W
R302	1-246-529-00	CARBON	220K	5%	1/4W
R303	1-246-545-00	CARBON	1M	5%	1/4W
R304	1-249-460-11	CARBON	15K	5%	1/4W
R305	1-247-713-11	CARBON	1K	5%	1/4W
R306	1-246-529-00	CARBON	220K	5%	1/4W
R307	1-249-459-11	CARBON	12K	5%	1/4W
R308	1-246-529-00	CARBON	220K	5%	1/4W
R309	1-247-725-11	CARBON	10K	5%	1/4W
R310	1-249-552-91	CARBON	1K		1/4W
R311	1-247-722-11	CARBON	5.6K	5%	1/4W
R312	1-247-710-11	CARBON	560	5%	1/4W
R313	1-249-463-11	CARBON	27K	5%	1/4W
R314	1-247-718-11	CARBON	2.7K		1/4W
R315	1-246-545-00	CARBON	1M	5%	1/4W
R316	1-247-706-11	CARBON	330	5%	1/4W
R400	1-247-725-11	CARBON	10K	5%	1/4W
R401	1-249-468-11	CARBON	82K	5%	1/4W
R402	1-246-529-00	CARBON	220K	5%	1/4W
R403	1-246-545-00	CARBON	1M	5%	1/4W
R404	1-249-460-11	CARBON	15K	5%	1/4W
R405	1-247-713-11	CARBON	1K	5%	1/4W
R406	1-246-529-00	CARBON	220K	5%	1/4W
R407	1-249-459-11	CARBON	12K	5%	1/4W
R408	1-246-529-00	CARBON	220K	5%	1/4W
R409	1-247-725-11	CARBON	10K	5%	1/4W
R410	1-249-552-91	CARBON	1K		1/4W
R411	1-247-722-11	CARBON	5.6K	5%	1/4W
R412	1-247-710-11	CARBON	560	5%	1/4W
R413	1-249-463-11	CARBON	27K	5%	1/4W
R414	1-247-718-11	CARBON	2.7K		1/4W
R415	1-246-545-00	CARBON	1M	5%	1/4W
R416	1-247-706-11	CARBON	330	5%	1/4W
R501	1-249-552-91	CARBON	1K		1/4W
R502	1-249-497-11	CARBON	33K		1/4W
R503	1-247-717-11	CARBON	2.2K	5%	1/4W
R504	1-247-710-11	(G-AEP)...CARBON	560	5%	1/4W
R504	1-247-706-11	(US,Canadian,AEP,UK) ....CARBON	330	5%	1/4W
R505 ⚠	1-247-704-11	CARBON	220	5%	1/4W F
R506 ⚠	1-247-704-11	CARBON	220	5%	1/4W F
R507	1-249-497-11	CARBON	33K		1/4W

ELECTRICAL PARTS

Ref.No.	Part No.	Description			
R508	1-247-718-11	(AEP,G-AEP,UK)..CARBON	2.7K	5%	1/4W
R508	1-247-716-11	(US,Canadian)...CARBON	1.8K	5%	1/4W
R509 ⚠	1-247-692-11	CARBON	22	5%	1/4W F
R510	1-247-725-11	CARBON	10K	5%	1/4W
R511	1-247-726-11	CARBON	33K	5%	1/4W
R512	1-249-462-11	CARBON	22K	5%	1/4W
R513	1-249-460-11	CARBON	15K		1/4W
R514	1-247-719-11	CARBON	3.3K	5%	1/4W
R515	1-247-713-11	CARBON	1K	5%	1/4W
R516 ⚠	1-247-692-11	CARBON	22	5%	1/4W F
R517 ⚠	1-247-700-11	CARBON	100	5%	1/4W F
R518 ⚠	1-247-700-11	CARBON	100	5%	1/4W F
R519 ⚠	1-247-719-11	CARBON	3.3K	5%	1/4W F
R520 ⚠	1-247-713-11	CARBON	1K	5%	1/4W F
R521 ⚠	1-247-713-11	CARBON	1K	5%	1/4W F
R522 ⚠	1-247-717-11	(US,Canadian) ...CARBON	2.2K	5%	1/4W F
R522 ⚠	1-247-718-11	(AEP,G-AEP,UK)...CARBON	2.7K	5%	1/4W F
R523	1-249-455-11	(US)...CARBON	4.7	5%	1/4W F
R524 ⚠	1-247-745-11	(US)...CARBON	330	5%	1/2W F
R525	1-249-455-11	(US)...CARBON	4.7	5%	1/4W F
R526	1-214-789-00	RES, METAL PLATE	0.1		
R527	1-214-789-00	RES, METAL PLATE	0.1		
R530	1-247-700-11	CARBON	100	5%	1/4W F
R531	1-249-460-11	(US,Canadian)....CARBON	15K	5%	1/4W
R531	1-247-721-11	(AEP,G-AEP,UK)...CARBON	4.7K	5%	1/4W
R532	1-247-727-11	CARBON	10	5%	1/2W
R533	1-249-465-11	CARBON	47K	5%	1/4W
R534	1-247-727-11	CARBON	10	5%	1/2W
R535	1-247-713-11	(G-AEP)...CARBON	1K		1/4W
R597 ⚠	1-215-890-11	(AEP,G-AEP,UK)...METAL OXIDE	470	5%	2W F
R597 ⚠	1-216-456-00	(US,Canadian)....METAL OXIDE	820	5%	2W F
R598	1-247-727-11	(G-AEP)...CARBON	10	5%	1/2W
R599	1-247-727-11	(G-AEP)...CARBON	10	5%	1/2W
R601	1-249-552-91	CARBON	1K		1/4W
R602	1-249-497-11	CARBON	33K		1/4W
R603	1-247-717-11	CARBON	2.2K	5%	1/4W
R604	1-247-710-11	(G-AEP).....CARBON	560	5%	1/4W
R604	1-247-706-11	(US,Canadian)...CARBON	330	5%	1/4W
R605 ⚠	1-247-704-11	CARBON	220	5%	1/4W F
R606 ⚠	1-247-704-11	CARBON	220	5%	1/4W F
R607	1-249-497-11	CARBON	33K		1/4W
R608	1-247-718-11	(AEP,G-AEP,UK)...CARBON	2.7K	5%	1/4W
R608	1-247-716-11	(US,Canadian)....CARBON	1.8K	5%	1/4W

The components identified by shading and mark ⚠ are critical for safety. Replace only with part number specified.

Les composants identifiés par une trame et une marque ⚠ sont critiques pour la sécurité. Ne les remplacer que par une pièce portant le numéro spécifié.

www.hifiengine.com

ELECTRICAL PARTS

Ref.No.	Part No.	Description				
R609 ⚠	1-247-692-11	CARBON	22	5%	1/4W	F
R610	1-247-725-11	CARBON	10K	5%	1/4W	
R611	1-247-726-11	CARBON	33K	5%	1/4W	
R612	1-249-462-11	CARBON	22K	5%	1/4W	
R613	1-249-460-11	CARBON	15K		1/4W	
R614	1-247-719-11	CARBON	3.3K	5%	1/4W	
R615	1-247-713-11	CARBON	1K	5%	1/4W	
R616 ⚠	1-247-692-11	CARBON	22	5%	1/4W	F
R617 ⚠	1-247-700-11	CARBON	100	5%	1/4W	F
R618 ⚠	1-247-700-11	CARBON	100	5%	1/4W	F
R619 ⚠	1-247-719-11	CARBON	3.3K	5%	1/4W	F
R620 ⚠	1-247-713-11	CARBON	1K	5%	1/4W	F
R621 ⚠	1-247-713-11	CARBON	1K	5%	1/4W	F
R622 ⚠	1-247-717-11	(US,Canadian)...CARBON	2.2K	5%	1/4W	F
R622 ⚠	1-247-718-11	(AEP,G-AEP,UK)..CARBON	2.7K	5%	1/4W	F
R623	1-249-455-11	CARBON	4.7	5%	1/4W	F
R624 ⚠	1-247-745-11	CARBON	330	5%	1/2W	F
R625	1-249-455-11	CARBON	4.7	5%	1/4W	F
R626	1-214-789-00	RES, METAL PLATE 0.1				
R627	1-214-789-00	RES, METAL PLATE 0.1				
R630	1-247-700-11	CARBON	100	5%	1/4W	F
R631	1-247-721-11	(AEP,G-AEP,UK)..CARBON	4.7K	5%	1/4W	
R631	1-249-460-11	(US,Canadian)...CARBON	15K	5%	1/4W	
R632	1-247-727-11	CARBON	10	5%	1/2W	
R633	1-249-466-11	CARBON	56K	5%	1/4W	
R634	1-247-727-11	CARBON	10	5%	1/2W	
R635	1-247-713-11	(G-AEP)...CARBON	1K	5%	1/4W	
R697 ⚠	1-215-890-11	(AEP,G-AEP,UK)...METAL OXIDE	470	5%	2W	F
R697 ⚠	1-216-456-00	(US,Canadian)....METAL OXIDE	820	5%	2W	F
R698	1-247-727-11	(G-AEP)...CARBON	10K	5%	1/4W	
R699	1-247-727-11	(G-AEP)...CARBON	10K	5%	1/4W	
R700	1-247-725-11	CARBON	10K	5%	1/4W	
R701	1-249-469-11	CARBON	100K	5%	1/4W	
R702	1-249-469-11	CARBON	100K	5%	1/4W	
R703	1-249-466-11	CARBON	56K	5%	1/4W	
R704	1-249-460-11	(AEP,G-AEP,UK)...CARBON	15K	5%	1/4W	
R704	1-249-462-11	(US,Canadian)....CARBON	22K	5%	1/4W	
R705	1-247-719-11	CARBON	3.3K	5%	1/4W	
R706 ⚠	1-206-723-00	(US,Canadian)....METAL OXIDE	820	5%	3W	F
R706 ⚠	1-216-479-11	(AEP,G-AEP,UK)...METAL OXIDE	560	5%	3W	F
R707	1-247-717-11	CARBON	2.2K	5%	1/4W	
R803	1-215-915-11	(AEP,G-AEP,UK)...METAL OXIDE	470	5%	3W	F
R803	1-216-479-11	(US,Canadian)....METAL OXIDE	560	5%	3W	F
R804	1-215-915-11	(AEP,G-AEP,UK)...METAL OXIDE	470	5%	3W	F
R804	1-216-479-11	(US,Canadian)....METAL OXIDE	560	5%	3W	F

ELECTRICAL PARTS

Ref.No.	Part No.	Description
RV300	1-237-741-11	RES, VAR, CARBON 250K/250K (VOLUME)
RV301	1-237-739-11	RES, VAR, CARBON 100K/100K (BALANCE)
RV302	1-237-740-11	RES, VAR, CARBON 100K/100K (TREBLE)
RV303	1-237-740-11	RES, VAR, CARBON 100K/100K (BASS)
RV501	1-228-989-00	RES, ADJ, CARBON 470
RV601	1-228-989-00	RES, ADJ, CARBON 470
RY700	1-515-356-00	RELAY
S1 ⚠	1-554-880-11	SWITCH, PUSH (AC POWER)(1 KEY)
S101	1-571-115-11	SWITCH, SLIDE (REC OUT SELECTOR)
S102	1-571-113-11	SWITCH, PUSH (6 KEY)(INPUT SELECTOR)
S103	1-571-111-11	SWITCH, PUSH (1 KEY)(CARTRIDGE)
S300	1-571-114-11	SWITCH, PUSH (3 KEY) (MUTING/SUB SONIC/LOUDNESS)
S303	1-571-112-11	SWITCH, PUSH (1 KEY)(TONE)
S500	1-571-109-11	SWITCH, ROTARY SLIDE (SPEAKER)
T1 ⚠	1-448-950-11	(US,Canadian)....TRANSFORMER, POWER
T1 ⚠	1-448-951-11	(AEP,G-AEP,UK)...TRANSFORMER, POWER
TH700	1-800-427-00	POSISTOR
TM500	1-536-706-00	TERMINAL BOARD (SP)

ACCESSORY & PACKING MATERIAL

Part No.	Description
3-701-630-00	BAG, POLYETHYLENE
3-703-450-01	(US).....INSTRUCTION
3-769-223-11	(AEP, UK)....MANUAL, INSTRUCTION
3-769-223-21	(US).....MANUAL, INSTRUCTION
3-769-223-31	(Canadian)...MANUAL, INSTRUCTION
3-769-223-41	(G-AEP).....MANUAL, INSTRUCTION
4-858-078-00	SHEET, PROTECTION
4-911-289-01	INDIVIDUAL CARTON
4-911-290-01	CUSHION

The components identified by shading and mark ⚠ are critical for safety. Replace only with part number specified.

Les composants identifiés par une trame et une marque ⚠ sont critiques pour la sécurité. Ne les remplacer que par une pièce portant le numéro spécifié.

www.hifiengine.com

TROUBLESHOOTING

Symptom	Remedy
No audio	• Check power cord connection. • Check speaker and program source connections. • Check SPEAKERS selector setting. • Check INPUT SELECTOR. • Adjust VOLUME control.
No audio from one channel or unbalanced left and right volume	• Adjust BALANCE control. • Check speaker and input connections of inoperative channel.
Abrupt sound loss from both speakers	• Turn off amplifier. Check speaker terminals and connecting cords for short.
Lack of bass sound or obscure instrument position	• Check speaker +/– connections for proper phasing.
TONE controls do not work.	• Set TONE switch to ON.
Recording of the desired program source cannot be made.	• Check REC OUT SELECTOR setting.
Severe hum or noise	• TV or VTR is too close to audio system. • Move connecting cords away from transformers, motors or fluorescent lights. • Ground turntable system. • Fully insert connecting cord plugs. • Disconnect turntable ground wire when using an MM cartridge with a ground piece. • Wipe plugs and jacks with a cloth lightly moistened with methanol.

English
87G0593-1
Printed in Japan
1987. 7

9-952-809-11

Sony Corporation
Audio Group

www.hifiengine.com