STR-V5

US Model
Canadian Model
AEP Model
UK Model
E Model

Photo: US, Canadian, E model

FM STEREO/FM-AM RECEIVER

SPECIFICATIONS

GENERAL

Power Requirements: 120V ac, 60Hz (US, Canadian model)
110, 120, 220 or 240V ac adjustable, 50/60Hz (AEP, UK, E model)

Power Consumption: 135W (US model)
310VA (Canadian model)
500W (AEP, E model)
430W (UK model)

AC Outlets: 1 switched, 100W } (US, Canadian
1 unswitched, 300W } model)

Dimensions: Approx. 525 (w) x 195 (h) x 450 (d) mm
20½ (w) x 7½ (h) x 17¾ (d) inches
including projecting parts and controls

SAFETY-RELATED COMPONENT WARNING!!

COMPONENTS IDENTIFIED BY SHADING AND MARK ⚠ ON THE SCHEMATIC DIAGRAMS, EXPLODED VIEWS AND IN THE PARTS LIST ARE CRITICAL TO SAFE OPERATION. REPLACE THESE COMPONENTS WITH SONY PARTS WHOSE PART NUMBERS APPEAR AS SHOWN IN THIS MANUAL OR IN SUPPLEMENTS PUBLISHED BY SONY.

ATTENTION AU COMPOSANT AYANT RAPPORT À LA SÉCURITÉ!

LES COMPOSANTS IDENTIFIÉS PAR UN TRAMÉ ET UNE MARQUE ⚠ SUR LES DIAGRAMMES SCHÉMATIQUES, LES VUES EXPLOSÉES ET LA LISTE DES PIÈCES SONT CRITIQUES POUR LA SÉCURITÉ DE FONCTIONNEMENT. NE REMPLACER CES COMPOSANTS QUE PAR DES PIÈCES SONY DONT LES NUMÉROS SONT DONNÉS DANS CE MANUEL OU DES SUPPLÉMENTS PUBLIÉS PAR SONY.

Weight: US, Canadian model
Approx. 20.2 kg, 44 lb 10 oz (net)
Approx. 22.4 kg, 49 lb 6 oz (in shipping carton)

AEP, UK model
Approx. 18.7 kg, 41 lb 4 oz (net)
Approx. 22.2 kg, 48 lb 15 oz (in shipping carton)

E model
Approx. 20.0 kg, 44 lb 1 oz (net)
Approx. 23.4 kg, 51 lb 10 oz (in shipping carton)

FM SECTION

Antenna: 300Ω balanced
75Ω unbalanced

Tuning Range: 87.5 MHz–108 MHz

Intermediate Frequency: 10.7 MHz

Sensitivity at 50 dB Quieting: US, Canadian, E model
14.5 dBf, 2.9μV (MONO)
37.3 dBf, 40μV (STEREO)

Sensitivity at 46 dB Quieting: (40 kHz deviation) AEP, UK model
17.1 dBf, 3.9μV (MONO)
38.3 dBf, 45μV (STEREO)

Usable Sensitivity: US, Canadian, E model
9.8 dBf, 1.7μV

AEP, UK model
1.4μV, S/N = 26 dB (40 kHz deviation)
10.3 dBf, 1.8μV, IHF

– Continued on page 2 –

SONY®
SERVICE MANUAL

655

1-2. BLOCK DIAGRAM

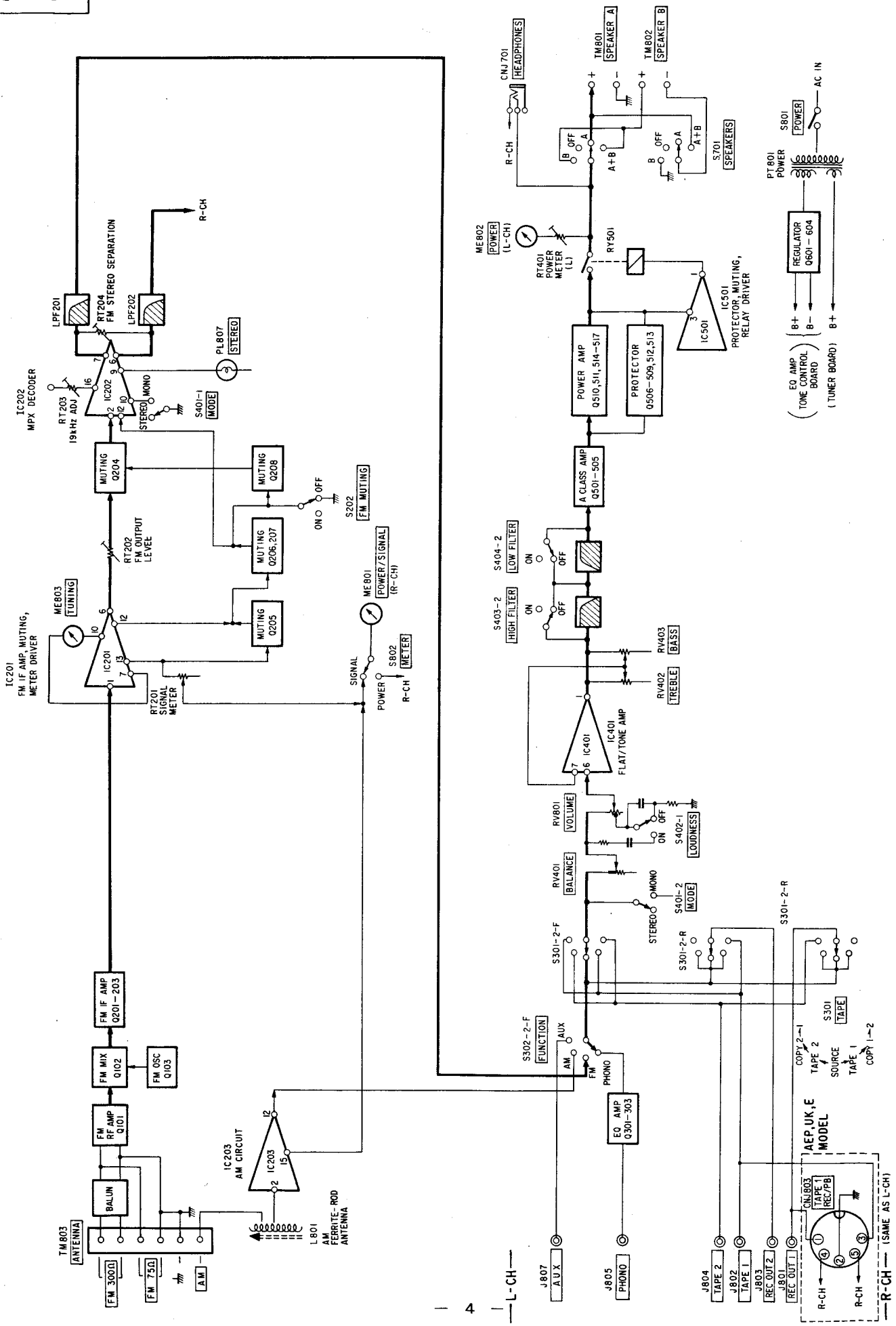

MODEL IDENTIFICATION

— Specification Label —

US model

SONY®
FM STEREO/FM-AM RECEIVER
MODEL NO. STR-V5
FREQ. RANGE : FM 87.5-108MHz AM 530-1605kHz
IF : FM 10.7MHz AM 455 kHz
AC 120V 60Hz 135 W
SERIAL NO. MADE IN JAPAN
CERTIFICATION : DESIGN CERTIFIED AS COMPLYING WITH F.C.C. RULES PART 15, IN EFFECT AS OF DATE OF MANUFACTURE.

AEP, E model

SONY®
FM STEREO / FM-AM RECEIVER
MODEL NO. STR-V5
FREQ. RANGE : FM 87.5-108MHz AM 530-1605kHz
IF : FM 10.7MHz AM 468kHz
AC 110. 120. 220. 240V~ 50/60Hz 500 W
SERIAL NO.
FTZ-PRÜFNUMMER U185
MADE IN JAPAN

Canadian model

SONY®
FM STEREO/FM-AM RECEIVER
MODEL NO. STR-V5
FREQ. RANGE : FM 87.5-108MHz AM 530-1605kHz
IF : FM 10.7MHz AM 455 kHz
AC 120V 60Hz 310 VA
SERIAL NO.
MADE IN JAPAN

UK model

SONY®
FM STEREO / FM-AM RECEIVER
MODEL NO. STR-V5
FREQ. RANGE : FM 87.5-108MHz AM 530-1605kHz
IF : FM 10.7MHz AM 468kHz
AC 110. 120. 220. 240V~ 50/60Hz 430 W
SERIAL NO.
MADE IN JAPAN

SECTION 1
OUTLINE

1-1. SERVICING NOTE

When replacing the SPEAKERS, TAPE, FUNCTION, BASS, TREBLE and BALANCE control knobs, prepare the knob cap and knob mold together.

Part No.	*Description*
X-4857-434-1	Knob Ass'y, control; SPEAKERS, TAPE, FUNCTION, BASS, TREBLE, BALANCE

INSTALLATION OF THE CONTROL KNOB ASS'Y

❶ Switches and controls should be set as follows.

* Position	SPEAKERS:	A
	BASS:	DEFEAT
	TREBLE:	DEFEAT
	BALANCE:	center detent position
	TAPE:	SOURCE
	FUNCTION:	FM

❷

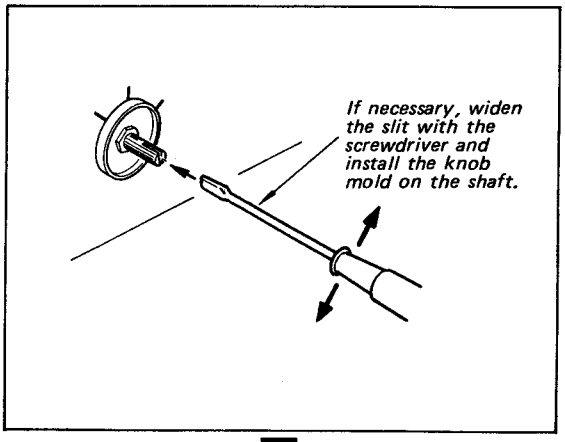

❸

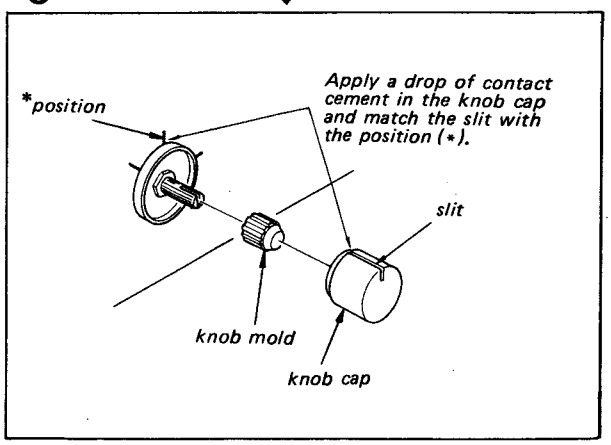

Limitting Threshold: 1μV (AEP, UK model)

S/N Ratio: US, Canadian, E model
75 dB (MONO)
70 dB (STEREO)

AEP, UK model
(40 kHz deviation)
67 dB (MONO)
63 dB (STEREO)

Harmonic Distortion: US, Canadian, E model
AEP, UK model (40 kHz deviation)

	MONO	STEREO
100 Hz	0.08%	0.3%
1 kHz	0.08%	0.25%
10 kHz	0.1%	0.5%

IM Distortion: US, Canadian, E model
AEP, UK model (40 kHz deviation)

MONO	STEREO
0.08%	0.25%

Separation: 40 dB at 100 Hz
48 dB at 1 kHz
43 dB at 10 kHz

Frequency Response: US, Canadian, E model
30 Hz–15 kHz $^{+0.2}_{-1.5}$ dB
AEP, UK model
40 Hz–12.5 kHz $^{+0.2}_{-1.0}$ dB
30 Hz–15 kHz $^{+0.2}_{-1.5}$ dB

Selectivity: US, Canadian, E model
75 dB at 400 kHz

AEP, UK model
50 dB at 300 kHz
85 dB at 400 kHz

Capture Ratio: 1.0 dB

AM Suppression Ratio: 60 dB

Image Response Ratio: 80 dB

IF Response Ratio: 100 dB

Spurious Response Ratio: 100 dB

RF Intermodulation: 70 dB

Sub-carrier Product Ratio: 60 dB

SCA Rejection Ratio: 60 dB (US, Canadian model)

Muting Threshold: Approx. 5μV

AM SECTION

Antenna: Built-in ferrite-rod antenna
External antenna terminal

Tuning Range: 530 kHz–1,605 kHz

Intermediate Frequency: 455 kHz (US, Canadian model)
468 kHz (AEP, UK, E model)

Usable Sensitivity: 200μV/m, built-in antenna
100μV, external antenna
at 1,000 kHz

S/N Ratio: 50 dB at 50 mV/m

Harmonic Distortion: 0.5% at 50 mV/m, 400 Hz

Selectivity: 40 dB at 10 kHz (US, Canadian model)
35 dB at 10 kHz (AEP, UK, E model)

Image Response Ratio: 40 dB at 1,000 kHz

IF Response Ratio: 40 dB at 1,000 kHz

AUDIO AMPLIFIER SECTION

Power Output and Total Harmonic Distortion: With 8Ω loads, both channels driven, from 20–20,000 Hz; rated 85W per channel minimum RMS power, with no more than 0.07% total harmonic distortion from 250 mW to rated output. (US, Canadian model)

Continuous RMS Power Output: Less than 0.07% THD, both channels driven simultaneously
at 20 Hz–20 kHz
85 + 85W (8Ω) (AEP, UK, E model)
80 + 80W (4Ω) (AEP, E model)
at 1 kHz
90 + 90W (8Ω) (AEP, UK, E model)
80 + 80W (4Ω) (AEP, E model)
according to DIN 45500
85 + 85W (8Ω) (AEP, UK, E model)

Dynamic Power Output: (IHF constant power supply method) 264W (8Ω) (AEP, UK, E model)

Power Bandwidth: (IHF) 10 Hz–35 kHz (AEP, UK, E model)

Damping Factor: 40 at 1 kHz, 8Ω

Harmonic Distortion: Less than 0.07% at rated output } (AEP, UK, E model)
Less than 0.05% at 1W output

IM Distortion: (60 Hz:7 kHz = 4:1) Less than 0.07% at rated output
Less than 0.05% at 1W output

Residual Noise: Less than 0.3 mV (A-network)

Frequency Response: PHONO
RIAA equalization curve ±0.5 dB
AUX, TAPE 1, 2 } 5 Hz–50 kHz $^{+0}_{-2}$ dB
REC/PB 5 Hz–50 kHz $^{+0}_{-2}$ dB
(AEP, UK, E model)

Input Sensitivity, Impedance and S/N Ratio: Measured with rated output power into 8Ω loads (both channels driven simultaneously) at 1 kHz.

	Sensitivity	Impedance	S/N	Weighting network
PHONO	2.5 mV	50 kΩ	75 dB	A
AUX TAPE 1, 2 REC/PB (AEP, UK, E model)	150 mV	100 kΩ	100 dB	A

Output and Impedance: With rated input, FM 30% modulation, speaker rated output

	Voltage	Impedance
REC OUT 1, 2	150 mV	4.7 kΩ
REC/PB (AEP, UK, E model)	40 mV	82 kΩ

Headphones: Accepts 8Ω to 10 kΩ headphones

Speaker: 4Ω to 16Ω speakers are suitable (AEP, E model)
8Ω to 16Ω speakers are suitable (US, Canadian, UK model)

Tone Controls: BASS ±10 dB at 100 Hz
TREBLE ±10 dB at 10 kHz

Filters: HIGH 6 dB/oct. above 9 kHz
LOW 6 dB/oct. below 50 Hz

Loudness Control: (att. 30 dB) +10 dB at 50 Hz
+3 dB at 10 kHz

SECTION 2
DISASSEMBLY

2-1. REMOVAL

Note: Follow the disassembly procedure in the numerical order given.

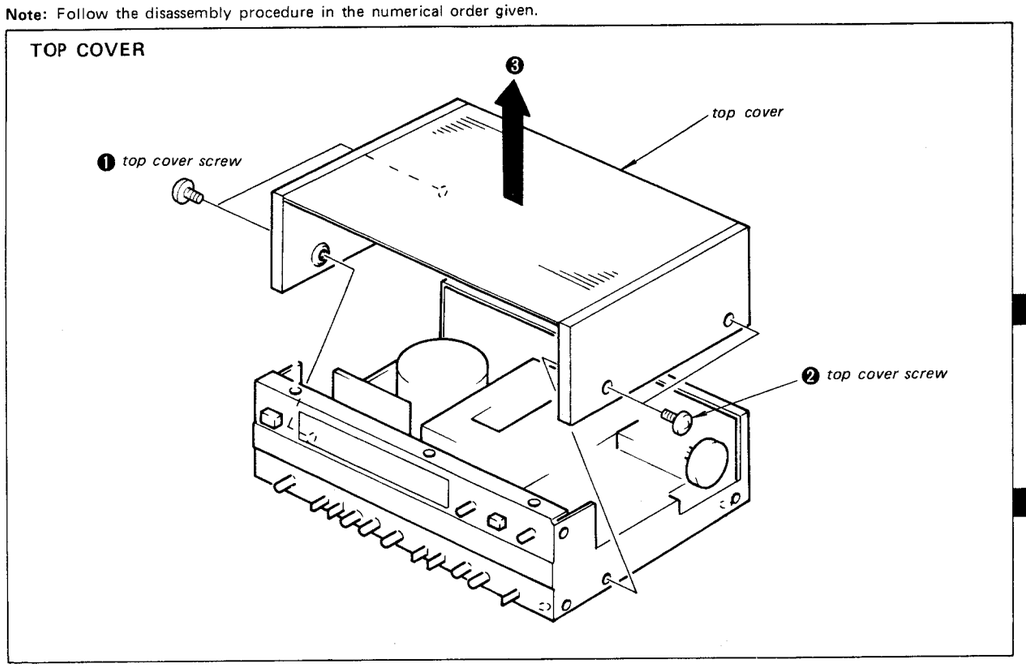

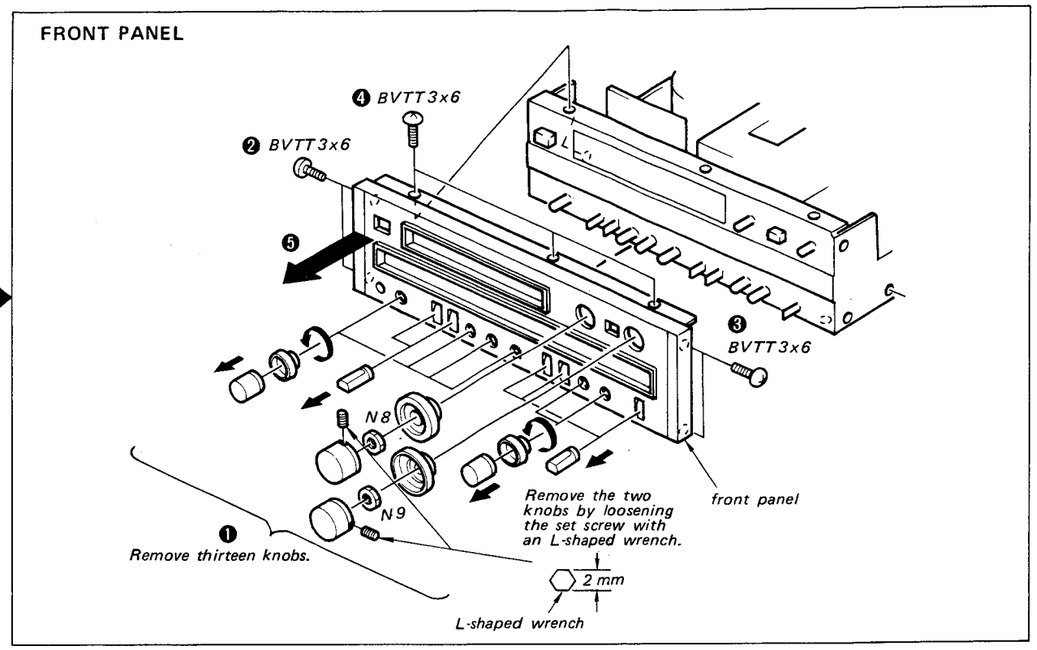

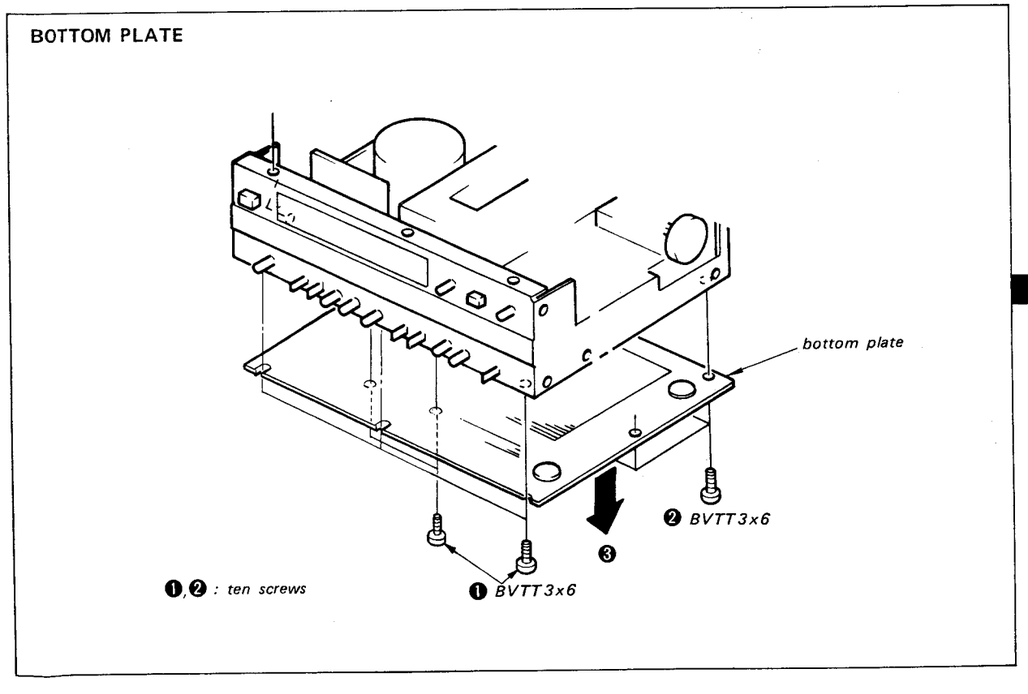

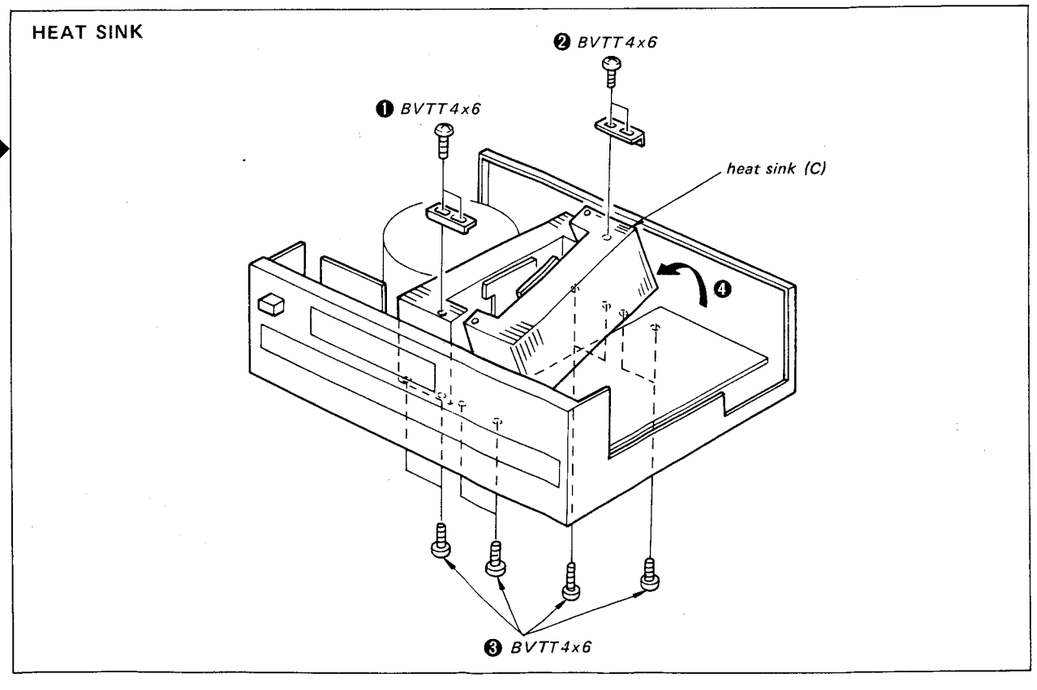

2-2. DIAL CORD STRINGING

1) Dial Cord Length

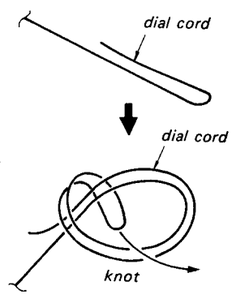

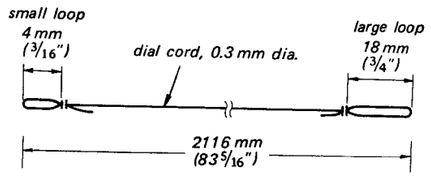

2) Dial Cord Stringing

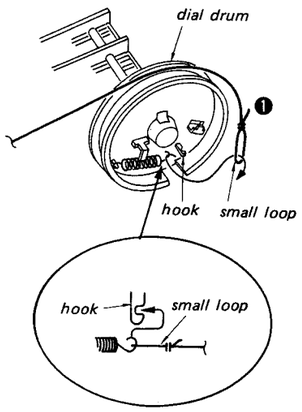

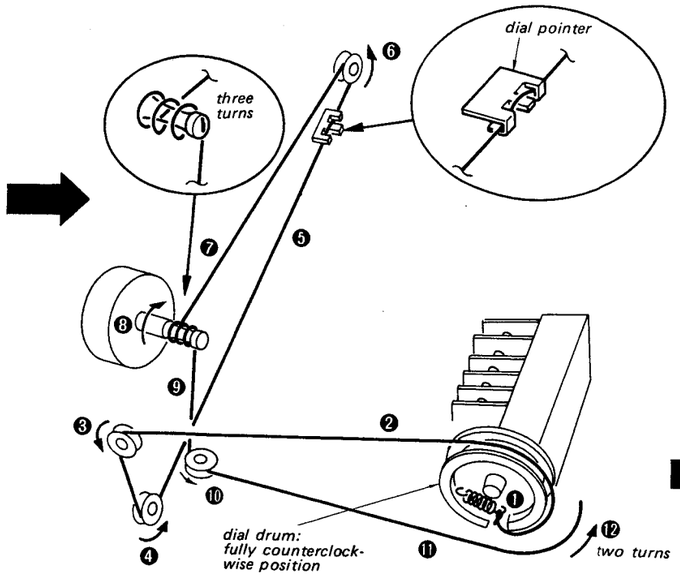

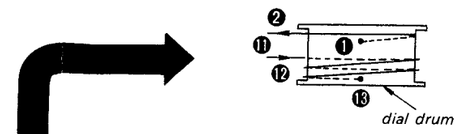

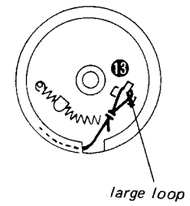

Hook the large loop of the dial cord.

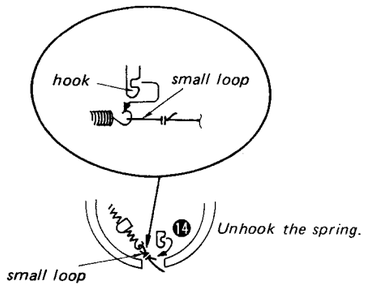

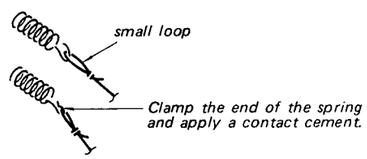

3) Dial Pointer Setting

1. Tune the receiver to a station of known frequency and set the dial pointer to the frequency on the dial scale.
2. Apply a drop of contact cement to the dial pointer.

SECTION 3
ADJUSTMENT

DC Bias Adjustment

Note: 1. Turn on the POWER switch and wait for a few minutes for warm-up.
2. With no input signal, set SPEAKER switch to A.

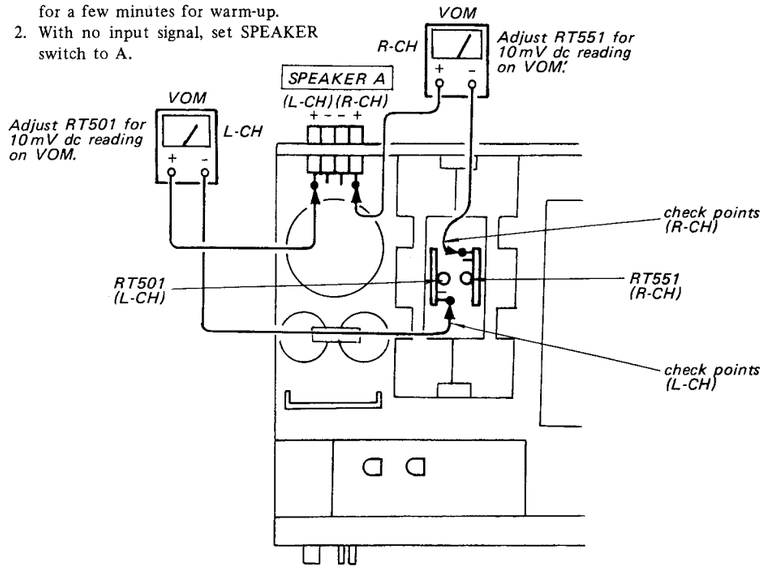

Meter Level Adjustment

Setting:

VOLUME control: maximum

Procedure:

1.

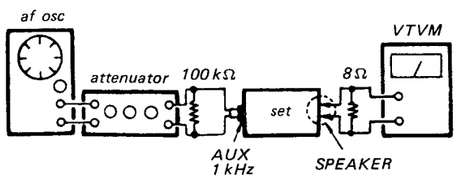

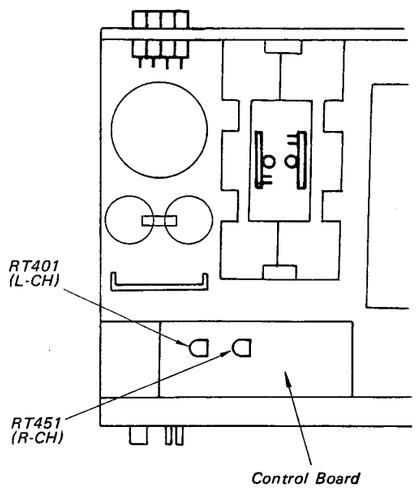

2. Adjust attenuator for 2.83 V reading on VTVM.
3. Adjust RT401 (L-CH) and RT451 (R-CH) so that POWER meter indicates 1 W.

FM Frequency Coverage and Tracking Adjustment

Test Setup:

FUNCTION selector: FM

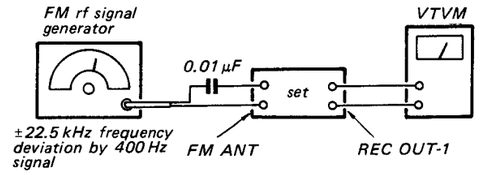

Note: Repeat the procedures in each adjustment several times, and the frequency coverage and tracking adjustments should be finally done by the trimmer capacitors.

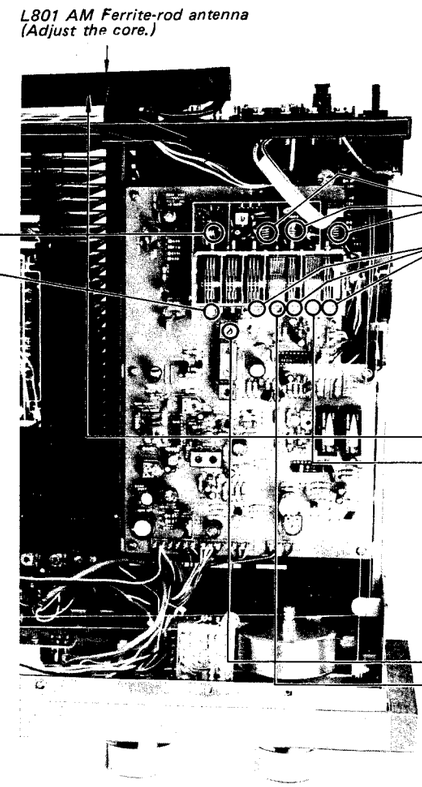

FM FREQUENCY COVERAGE ADJUSTMENT	
Adjust for a maximum reading on VTVM.	
87.2 MHz (87.5 MHz)	L105
108.4 MHz (108.0 MHz)	CT104

( ): in West Germany

FM TRACKING ADJUSTMENT	
Adjust for a maximum reading on VTVM.	
L101–103	87.2 MHz (87.5 MHz)
CT101–103	108.4 MHz (108.0 MHz)

( ): in West Germany

Step	AM TRACKING ADJUSTMENT	
1	L801	600 kHz
2	CT201	1,400 kHz

Step	AM FREQUENCY COVERAGE ADJUSTMENT	
1	T201	520 kHz
2	CT202	1,680 kHz

AM Frequency Coverage and Tracking Adjustment

Test Setup:

FUNCTION selector: AM

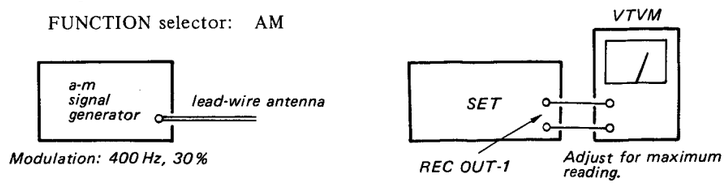

AM IF Alignment

IFT202 has been carefully adjusted at the factory, so the adjustment is unnecessary in the field.

FM IF Alignment

Setup:

FUNCTION selector: FM

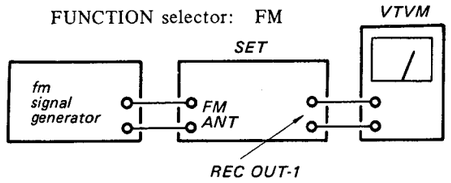

FM Signal Generator Setting:

Carrier frequency:	98 MHz
Modulation:	400 Hz, 75 kHz deviation (100%)
Output level:	12μV (23 dB)

Procedure:

Tune the set to 98 MHz and adjust IFT101 for maximum reading on the VTVM.

Signal Meter Adjustment

Setup:

FUNCTION selector: FM

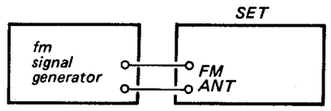

FM Signal Generator Setting:

Carrier frequency:	98 MHz
Modulation:	no modulation
Output level:	1 mV (60 dB)

Procedure:

Tune the set to 98 MHz and adjust RT201 for specified pointer position (See figure below.) on the SIGNAL meter.

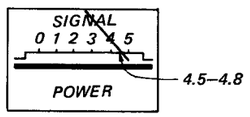

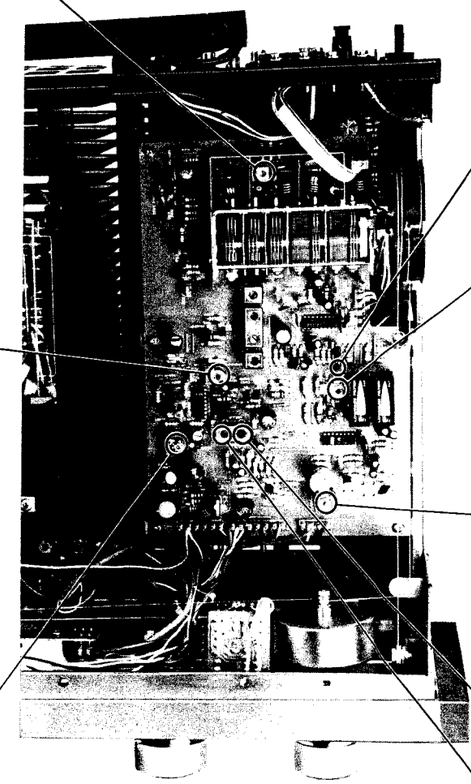

FM Output Level Adjustment

Setup:

FUNCTION selector: FM

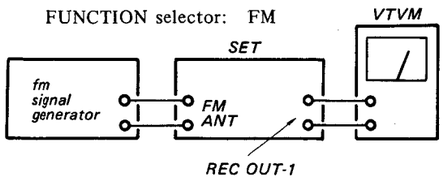

FM Signal Generator Setting:

Carrier frequency:	98 MHz
Modulation:	400 Hz, 75 kHz deviation (100%)
Output level:	1 mV (60 dB)

Procedure:

Adjust RT202 for 0.5 V (-4 dB) on the VTVM.

MPX Adjustment

Setup:

FUNCTION selector: FM

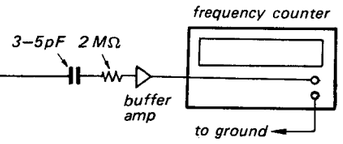

FM Signal Generator Setting:

Carrier frequency:	98 MHz
Modulation:	no modulation
Output level:	1 mV (60 dB)

Procedure:

Adjust RT203 for 76 kHz ± 100 Hz on the counter.

Note: Perform this adjustment after the power switch turned ON and one minute passed.

FM Stereo Separation Adjustment

Setup:

FUNCTION selector: FM

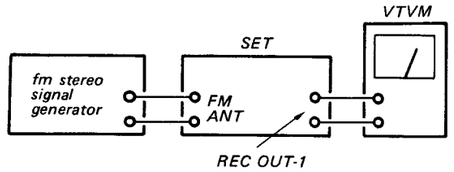

FM Stereo Signal Generator Setting:

Carrier frequency:	98 MHz
Output level:	1 mV (60 dB)
Mode:	Stereo
Audio (400 Hz) mod.:	67.5 kHz (90%)
Pilot (19 kHz) mod.:	7.5 kHz (10%)

Procedure:

FM stereo signal generator modulated channel	VTVM connection	VTVM reading
L-CH	L-CH	Ⓐ
R-CH	L-CH	Ⓑ Adjust R T204 for minimum reading.
R-CH	R-CH	Ⓒ
L-CH	R-CH	Ⓓ Adjust RT204 for minimum reading.

Stereo separation: Ⓐ – Ⓑ, Ⓒ – Ⓓ

The difference of the separations Ⓐ – Ⓑ and Ⓒ – Ⓓ should be within 3 dB.

Discriminator Adjustment

• Secondary-side Adjustment

Setup:

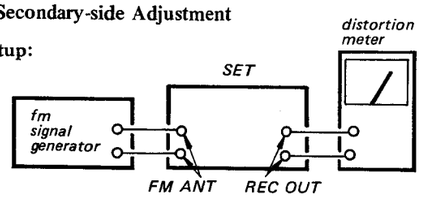

FM Signal Generator Setting:

Carrier frequency:	98 MHz
Output level:	1 mV (60 dB)

Procedure:

1. Tune the set to 98 MHz.
2. Adjust the secondary-side core (black) of IFT201 for a minimum reading on the distortion meter.

• Primary-side Adjustment

Procedure:

1. Detune the set.
2. Adjust the primary-side core (blue) of IFT201 for the center position on the TUNING meter.

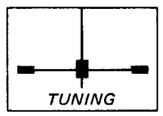

Note: Repeat the secondary-side and primary-side adjustments several times.

1		
2		
3		
4		
5		
6		
7		
8		
9		
10		
11		
12		
13		
14		
15		

16		
17		
18		
19		
20		
21		
22		
23		
24		
25		
26		
27		
28		
29		
30		

1		
2		
3		
4		
5		
6		
7		
8		
9		
10		
11		
12		
13		
14		
15		

16		
17		
18		
19		
20		
21		
22		
23		
24		
25		
26		
27		
28		
29		
30		

1		
2		
3		
4		
5		
6		
7		
8		
9		
10		
11		
12		
13		
14		
15		

16		
17		
18		
19		
20		
21		
22		
23		
24		
25		
26		
27		
28		
29		
30		

1		
2		
3		
4		
5		
6		
7		
8		
9		
10		
11		
12		
13		
14		
15		

16		
17		
18		
19		
20		
21		
22		
23		
24		
25		
26		
27		
28		
29		
30		

SECTION 4
DIAGRAMS

4-1. MOUNTING DIAGRAM — Tuner, Power Amp (L-CH) and Power Amp (R-CH) Board —

— Conductor Side —

Refer to page 19, 20 for the component side.

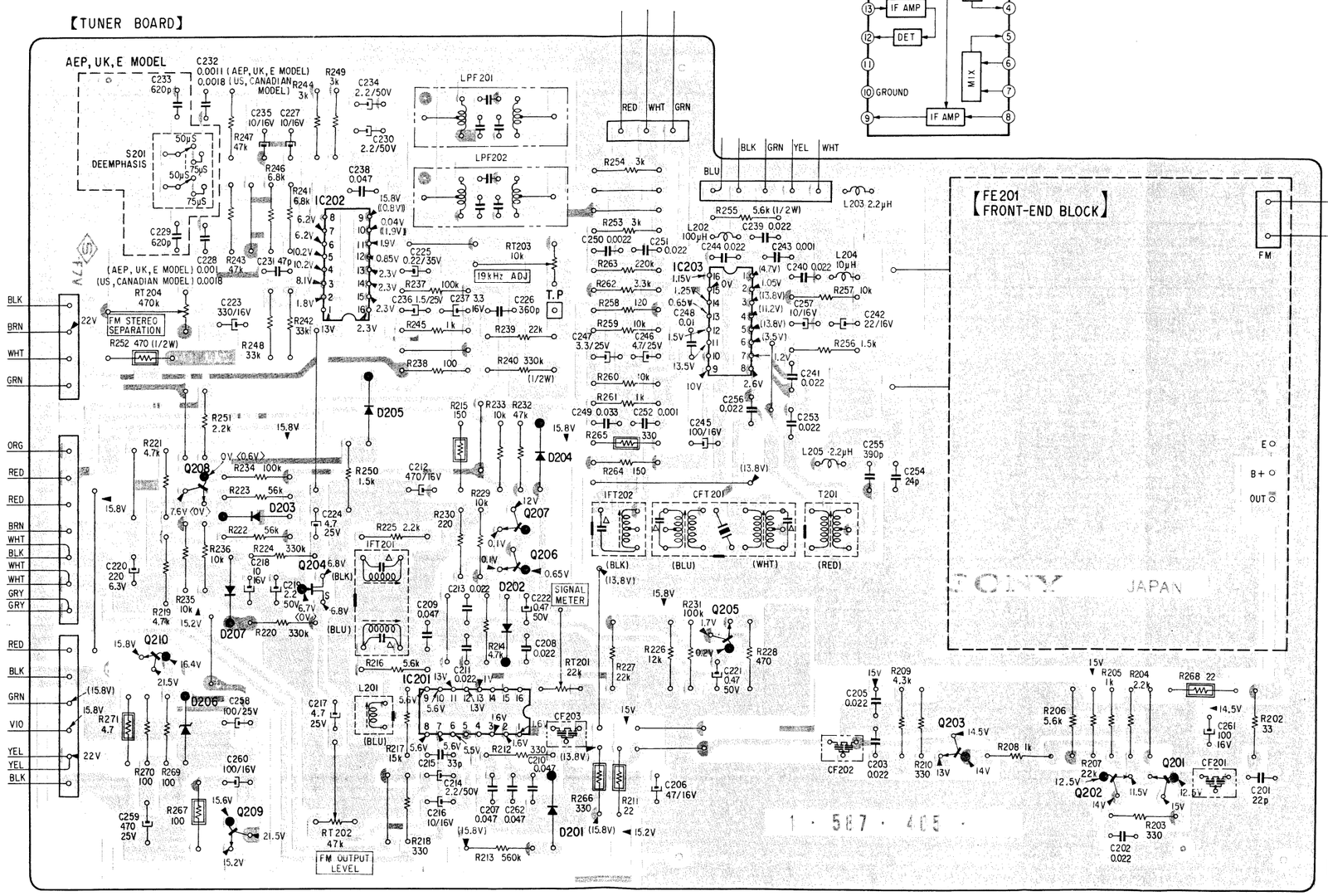

• IC203 LA1240

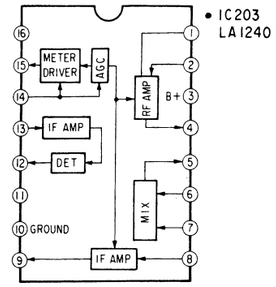

• IC501 HA12002

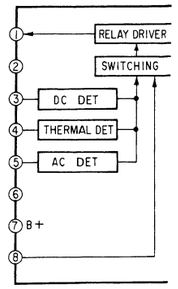

• IC202 HA1196

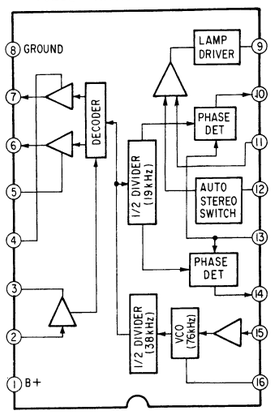

• IC201 HA1137W

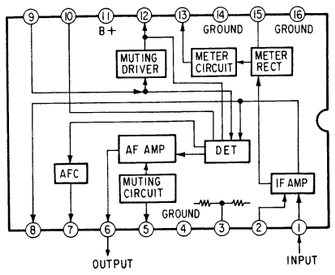

Q IC	210	208 209	204	IC202	IC201	207 206	IC203 205	203	202	201
D	206	207	203	205	202	204 201				

Note:

- ○—: parts extracted from the cor
- ⊡: indicates side identified wit
- : B+ pattern.
- Readings are taken under no-sig VOM (20 kΩ/V).
  ( ): FUNCTION (S302) — AM
  〈 〉: FM MUTING (S202) ON (
  (( )): FM STEREO (Tuned in FM
  no mark: FUNCTION (S302) — F
- Color code of sleeving over the en

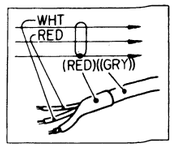

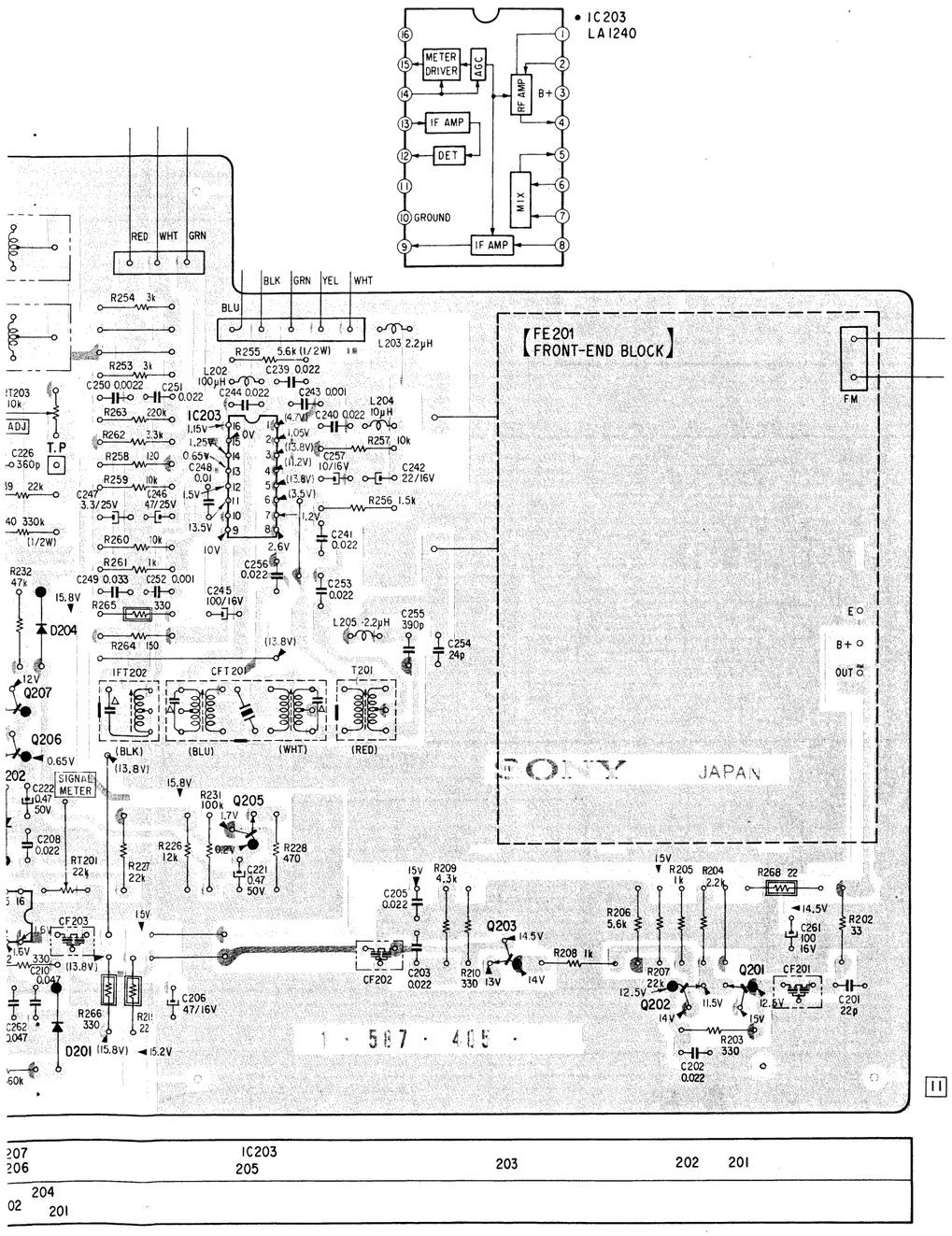

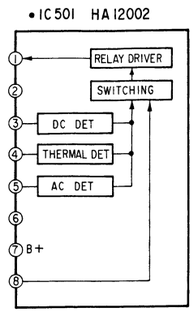

Refer to page 24, 25 for the component side.

【POWER AMP BOARD (L-CH)】

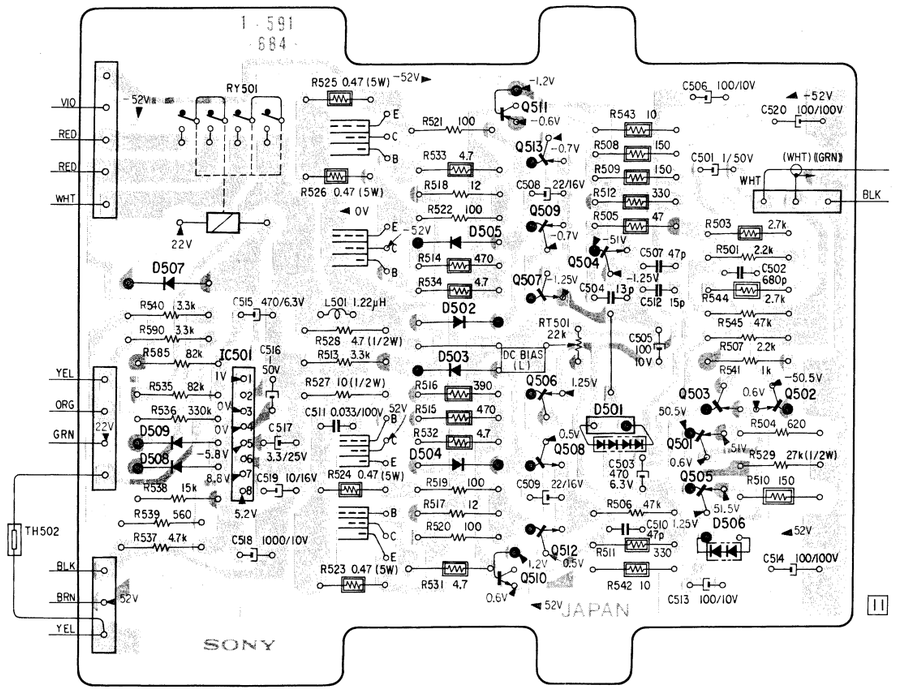

Q, IC	D
511	
513	
509	505
504	
507	507
	502
	503
506	
503	
502	
IC501	509
501	501
508	508
	504
505	
512	506
510	

【POWER AMP BOARD (R-CH)】

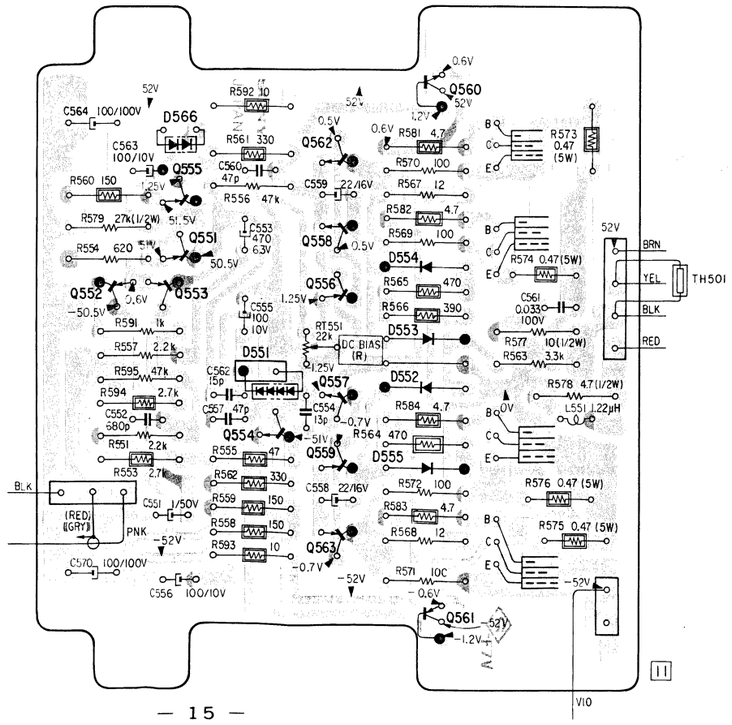

Q	D
560	
	566
562	
555	
558	
551	554
552,553 556	
	553
	552 551
557	
554	
559	555
563	
561	

Note:

- ○—: parts extracted from the component side.
- [-]-: indicates side identified with part number.
- ▒: B+ pattern.
- Readings are taken under no-signal conditions with a VOM (20 kΩ/V).
  - ( ): FUNCTION (S302) – AM
  - 〈 〉: FM MUTING (S202) ON (no signal input)
  - (( )): FM STEREO (Tuned in FM signal)
  - no mark: FUNCTION (S302) – FM
- Color code of sleeving over the end of the jacket.

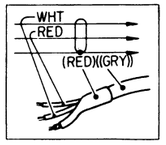

4-2. SCHEMATIC DIAGRAM — Tuner Section —

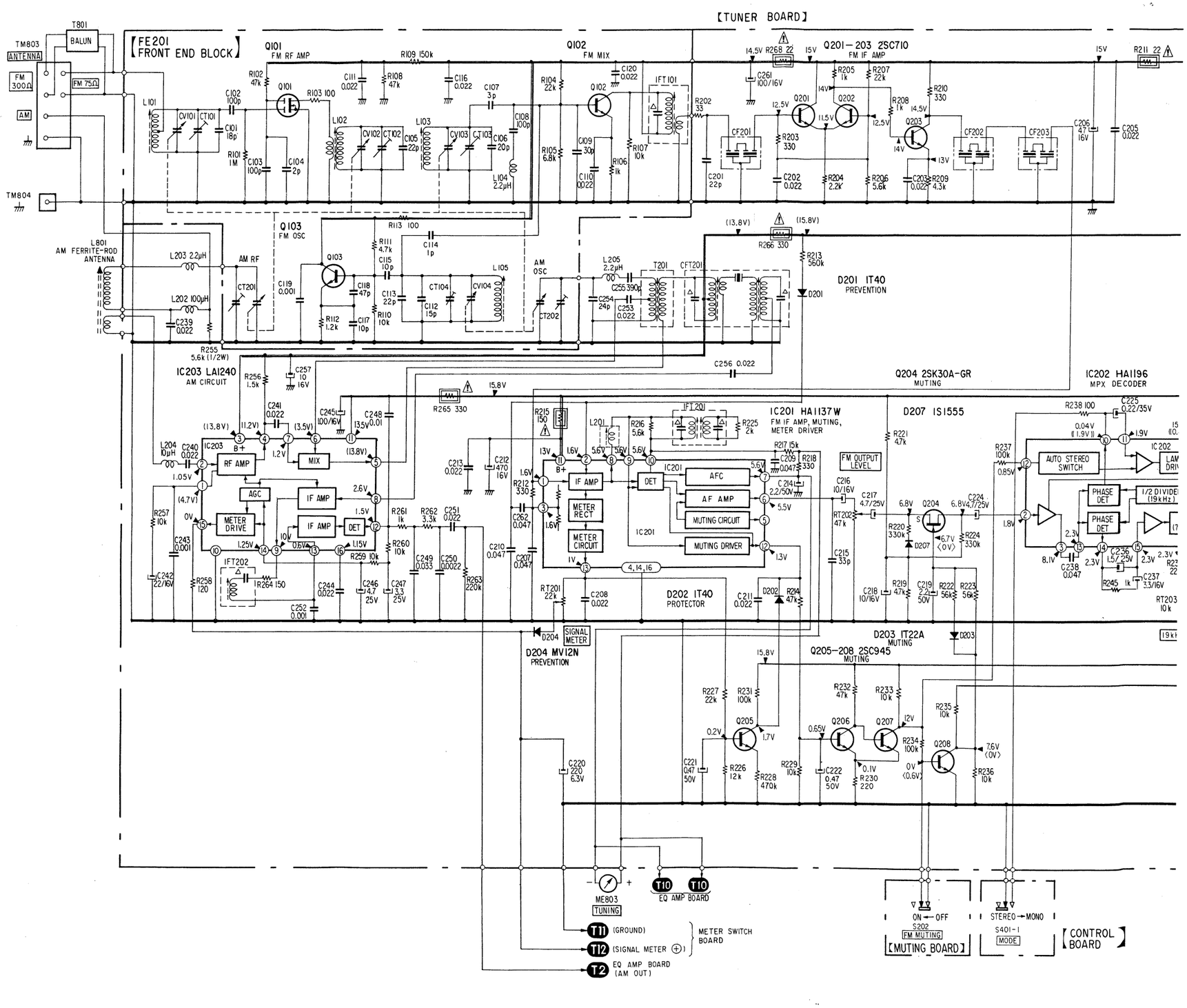

Note:

- All capacitors are in μF unless otherwise noted. pF: μμF 50WV or less are not indicated except for electrolytics.
- All resistors are in ohms, ¼W unless otherwise noted. kΩ: 1000Ω; MΩ: 1000kΩ
- Voltage variations may be noted due to normal production tolerances.
- ▭ : nonflammable resistor.
- △: internal component.
- ▭ : panel designation.
- ▭ : adjustment for repair.
- Readings are taken under no-signal conditions with a VOM (20kΩ/V).
  ( ) : FUNCTION (S302) — AM
  〈 〉: FM MUTING (S202) ON (no signal input)
  (( )) : FM STEREO (Tuned in FM signal)
  no mark: FUNCTION (S302) — FM
- ——: B+ bus.
- Switch

Ref. No.	Switch	Position
S201	DEEMPHASIS	50μs
S202	FM MUTING	OFF
S401-1	MODE	STEREO

Note: The components identified by shading and mark ⚠ are critical for safety. Replace only with part number specified.

Note: Les composants identifiés par un tramé et une marque ⚠ sont critiques pour la sécurité. Ne les remplacer que par une pièce portant le numéro spécifié.

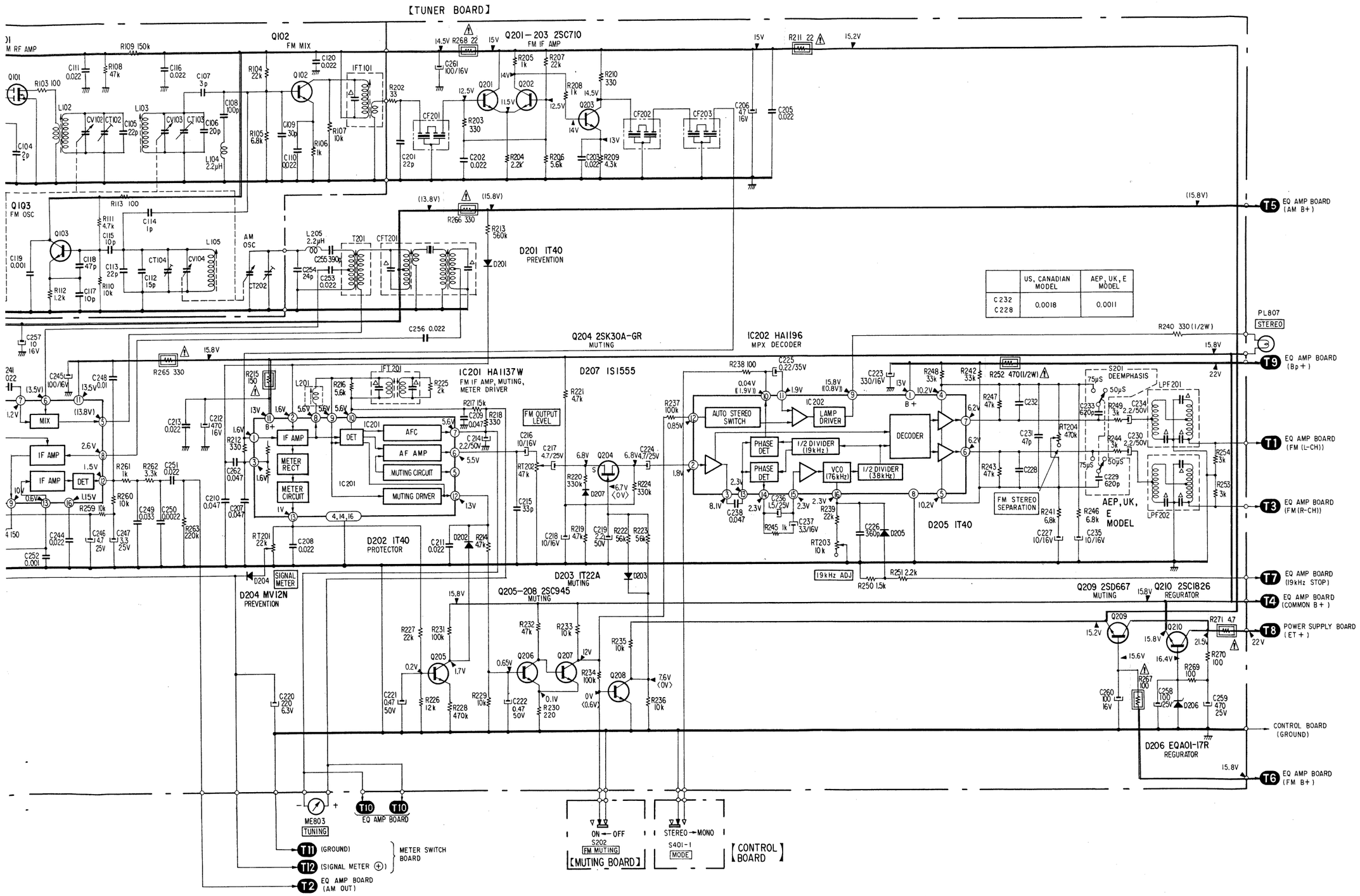

	US, CANADIAN MODEL	AEP, UK, E MODEL
C232 C228	0.0018	0.0011

4-3. MOUNTING DIAGRAM
– Tuner, Muting and Meter Switch Board –

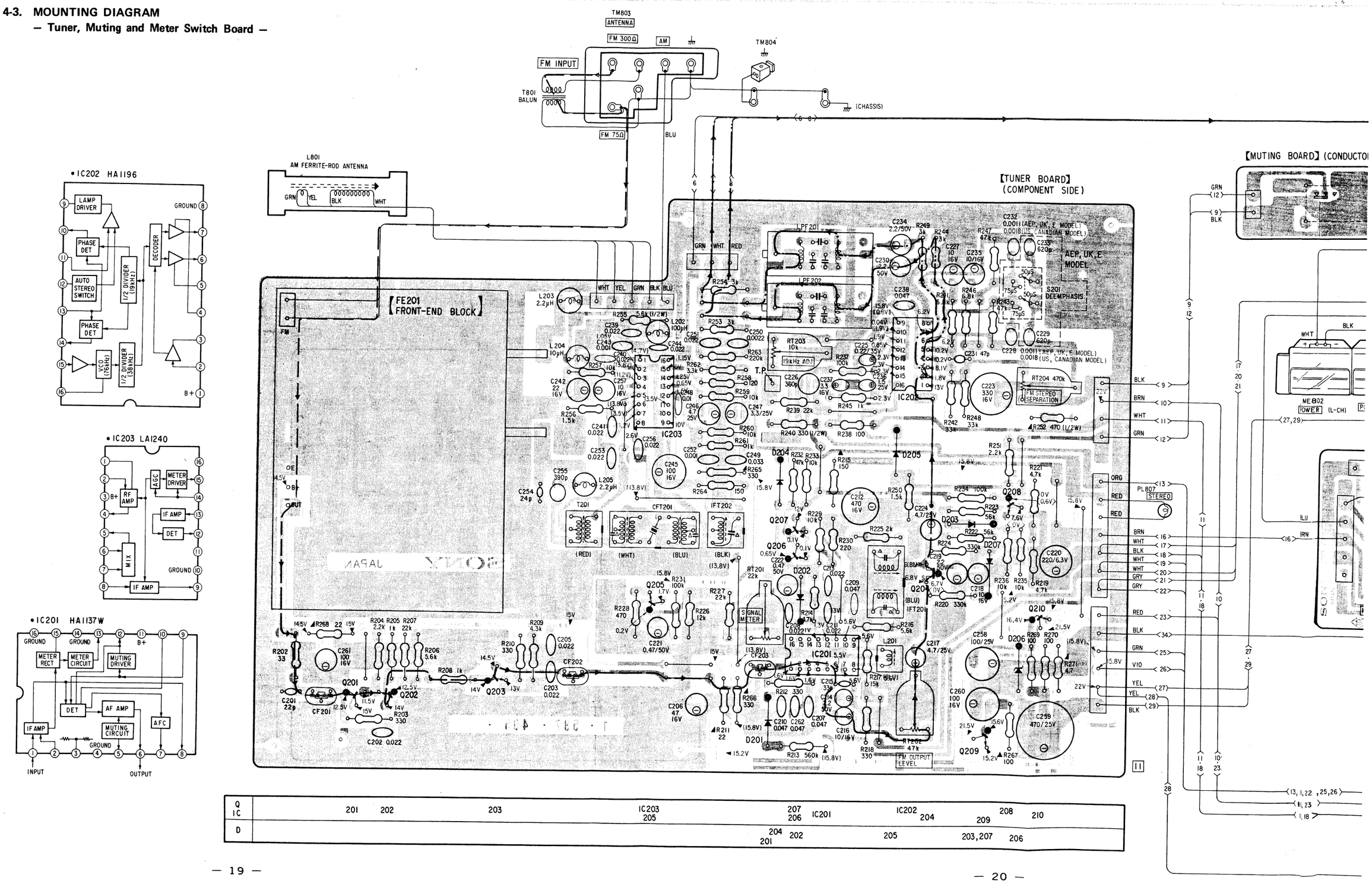

Q IC		201	202	203	IC203 205	207 206	IC201	IC202	204	209	208	210				
D						204 201	202	205	203,207	206						

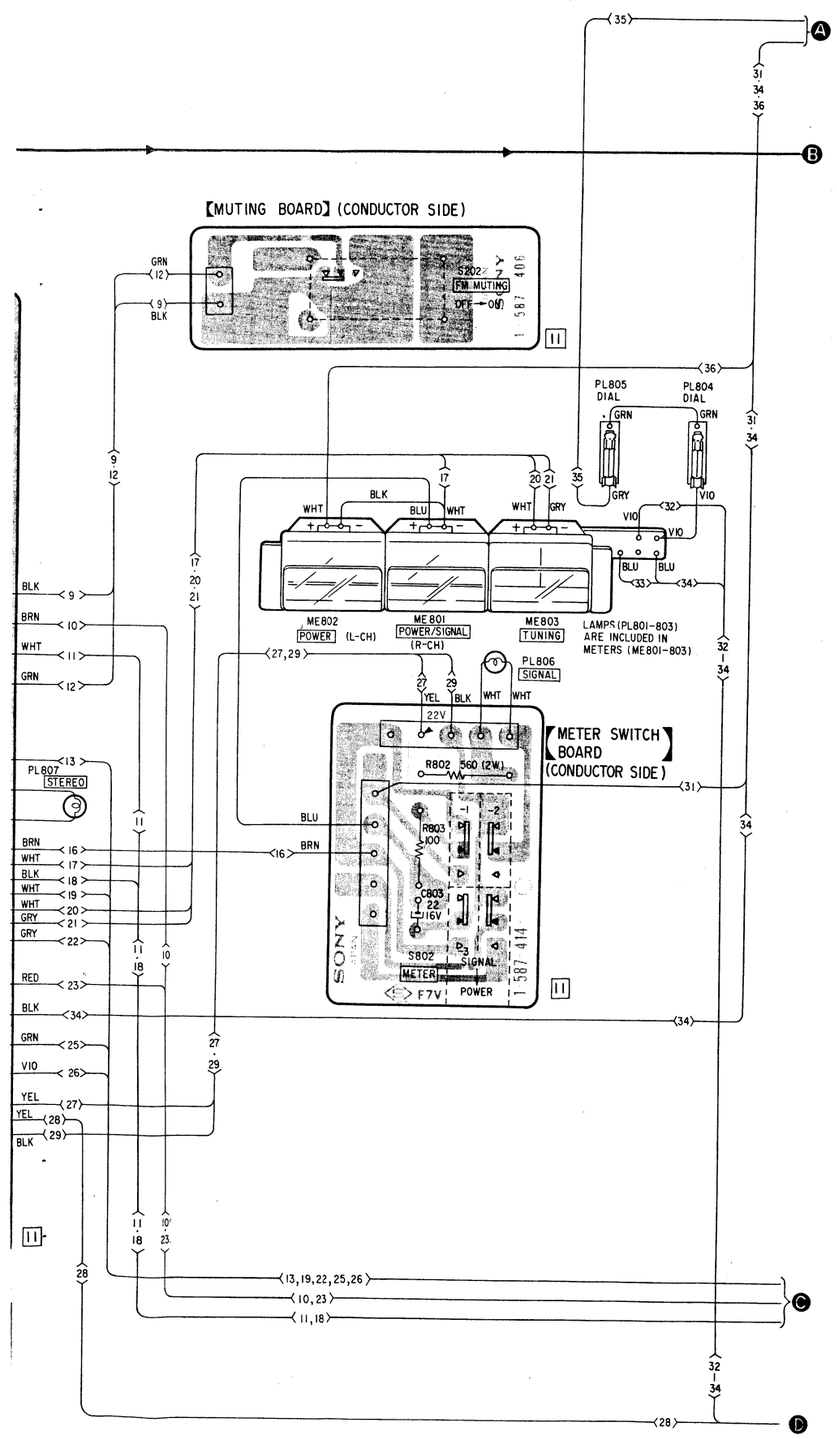

Note:

- ○—: parts extracted from the component side.
- [▯]→ : indicates side identified with part number.
- Color code of sleeving over the end of the jacket.

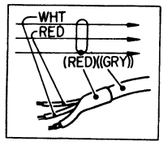

- ▲: nonflammable resistor.
- ▒ : B+ pattern.
- ▬▬▶▬ : Signal path
  - —·—▶ : L-CH
  - —--▶ : R-CH
  - ——▶ : Common
- Readings are taken under no-signal conditions with a VOM (20 kΩ/V).
  - ( ): FUNCTION (S302) – AM
  - 〈 〉: FM MUTING (S202) ON (no signal input)
  - (( )): FM STEREO (Tuned in FM signal)
  - no mark: FUNCTION (S302) – FM

Replacement Semiconductors

For replacement, use semiconductors except in ( ).

Q201–203: 2SC710

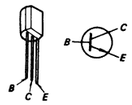

Q204: 2SK30A (2SK30A-GR)

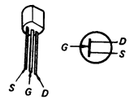

Q205–208, Q605: 2SC1364 (2SC945)
Q303, 353: 2SC1775-E (2SC1775)

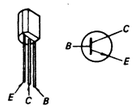

Q210: 2SD476A (2SC1826)

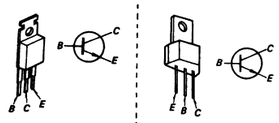

Q301, 302, Q351, 352: 2SA872-D (2SA872)

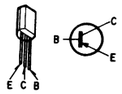

Q501–503, Q551–553: 2SA872D (2SA893)

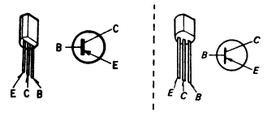

Q505, 555: 2SA896
Q602: 2SB647

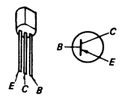

Q504, 554: 2SC1811
Q209, 601: 2SD667

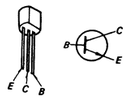

Q506, 509, 513, Q556, 559, 563: 2SA678 (2SA844)
Q604: 2SA678

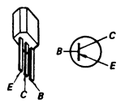

Q510, 560: 2SD669 (2SD669A)

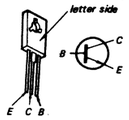

Q507, 508, 512, Q557, 558, 562, Q603: 2SC1364 (2SC634A)

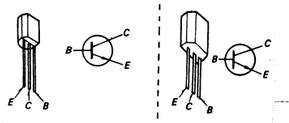

Q511, 561: 2SB649 (2SB649A)

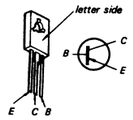

Q514, 516, Q564, 566: 2SD736

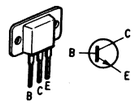

Q515, 517, Q565, 567: 2SB700

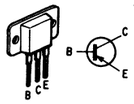

IC201: HA1137W

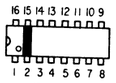

IC202: HA1196
IC203: LA1240

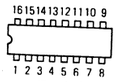

IC401, 451: HA1457
IC501: HA12002

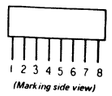

D201, 202, 205, D502–505, 507–509, D552–555, 606, D203, D701, 702, 751, 752, D209:

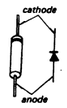

D204, D506, 556: MV12N

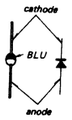

D206: EQB01-16 (E
D603, 604: EQB01-26
D605: EQB01-10 (E

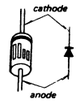

D501, 551: SV04S

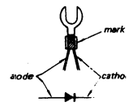

D601: S5151

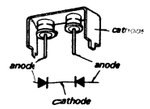

D602: S5151R

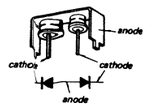

D607: SIR310

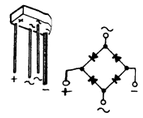

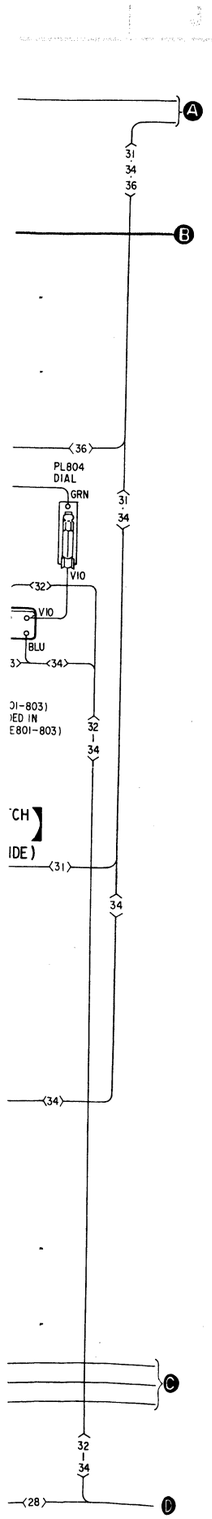

Note:

- ○—: parts extracted from the component side.
- [▯]→ : indicates side identified with part number.
- Color code of sleeving over the end of the jacket.

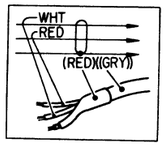

- ▲: nonflammable resistor.
- ▒ : B+ pattern.
- ▬▬▶▬ : Signal path
  - —·—▶ : L-CH
  - —--—▶ : R-CH
  - ——▶ : Common
- Readings are taken under no-signal conditions with a VOM (20 kΩ/V).
  - ( ) : FUNCTION (S302) – AM
  - 〈 〉: FM MUTING (S202) ON (no signal input)
  - (( )) : FM STEREO (Tuned in FM signal)
  - no mark: FUNCTION (S302) – FM

Replacement Semiconductors

For replacement, use semiconductors except in ( ).

Q201–203: 2SC710

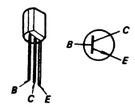

Q204: 2SK30A (2SK30A-GR)

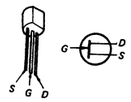

Q205–208, Q605: 2SC1364 (2SC945)
Q303, 353: 2SC1775-E (2SC1775)

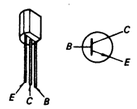

Q210: 2SD476A (2SC1826)

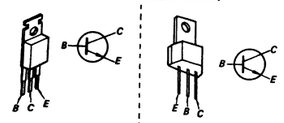

Q301, 302, Q351, 352: 2SA872-D (2SA872)

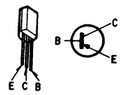

Q501–503, Q551–553: 2SA872D (2SA893)

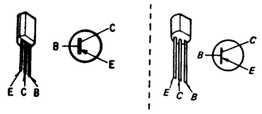

Q505, 555: 2SA896
Q602: 2SB647

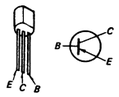

Q504, 554: 2SC1811
Q209, 601: 2SD667

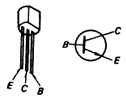

Q506, 509, 513, Q556, 559, 563, Q604: 2SA678 (2SA844)
2SA678

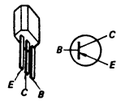

Q510, 560: 2SD669 (2SD669A)

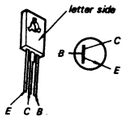

Q507, 508, 512, Q557, 558, 562, Q603: 2SC1364 (2SC634A)

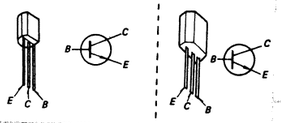

Q511, 561: 2SB649 (2SB649A)

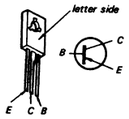

Q514, 516, Q564, 566: 2SD736

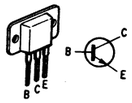

Q515, 517, Q565, 567: 2SB700

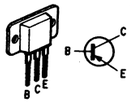

IC201: HA1137W

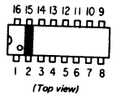

IC202: HA1196
IC203: LA1240

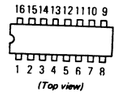

IC401, 451: HA1457
IC501: HA12002

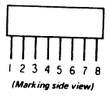

D201, 202, 205, D502–505, 507–509, D552–555, 606: 1S1555 (1T40)
D203, D701, 702, 751, 752: 1T22AM (1T22A)
D209: 1S1555

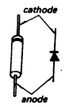

D204, D506, 556: MV12N

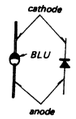

D206: EQB01-16 (EQA01-17R)
D603, 604: EQB01-26
D605: EQB01-10 (EQA01-10R)

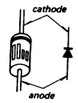

D501, 551: SV04S

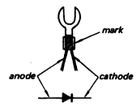

D601: S5151

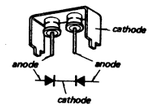

D602: S5151R

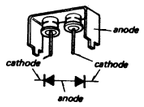

D607: SIRB10

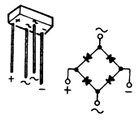

4-4. MOUNTING DIAGRAM — EQ Amp, Control, Power Amp (L-CH), Power Amp (R-CH), Transistor, Headphones and Power Supply Board —

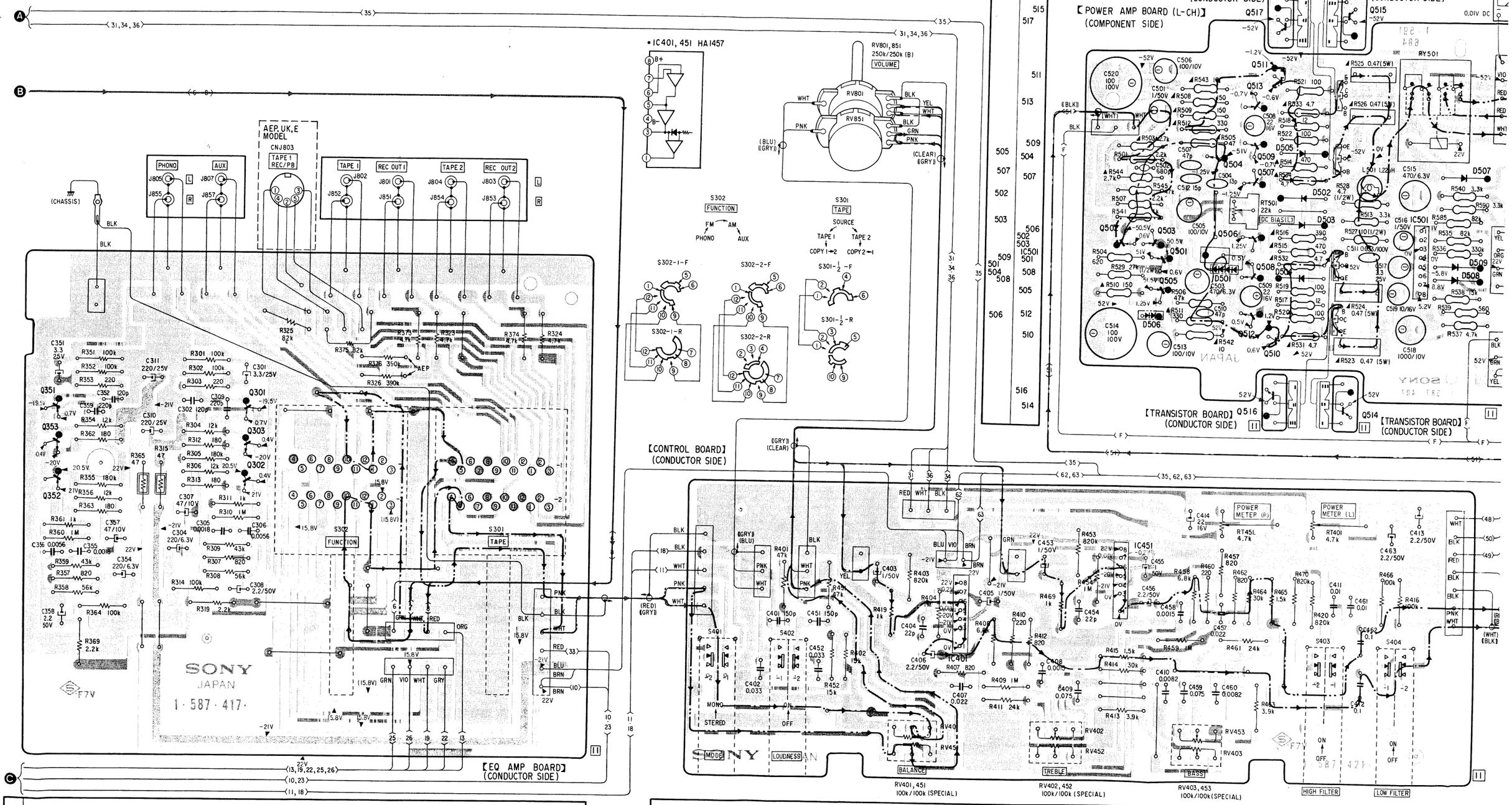

Q	
351	301
353	303
352	302

D	Q, IC
	515
	517
	511
	513
	509
505	504
507	507
502	
503	506
	502
	503
	IC501
509	501
501	
504	
508	508
	505
506	512
	510
	516
	514

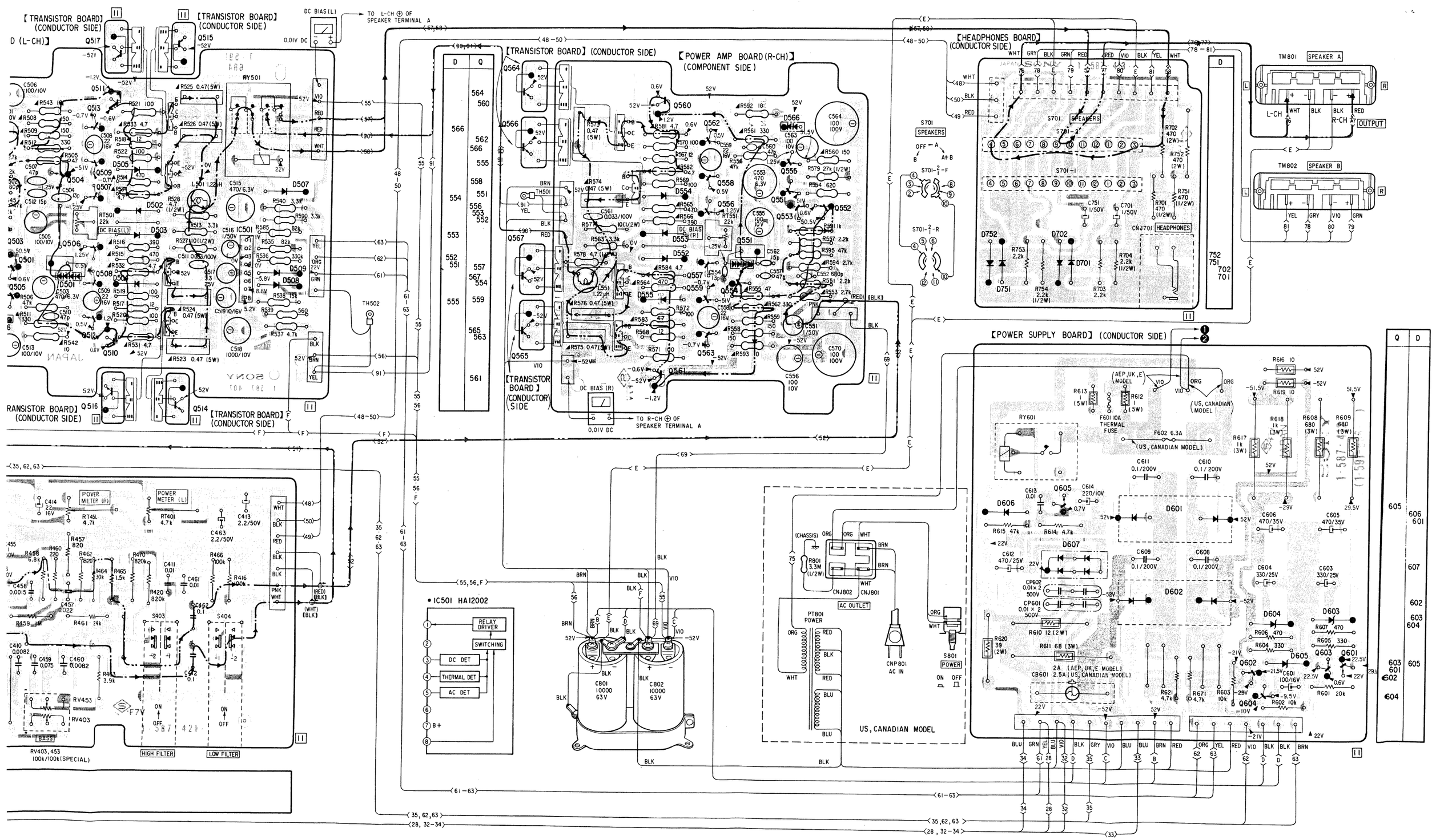
【TRANSISTOR BOARD】 (CONDUCTOR SIDE)
D (L-CH)】
【TRANSISTOR BOARD】 (CONDUCTOR SIDE)
【TRANSISTOR BOARD】 (CONDUCTOR SIDE)
【TRANSISTOR BOARD】 (CONDUCTOR SIDE)
【POWER AMP BOARD (R-CH)】 (COMPONENT SIDE)
【HEADPHONES BOARD】 (CONDUCTOR SIDE)
【POWER SUPPLY BOARD】 (CONDUCTOR SIDE)
TO L-CH ⊕ OF SPEAKER TERMINAL A
TO R-CH ⊕ OF SPEAKER TERMINAL A
DC BIAS (L)
DC BIAS (R)
0.01V DC
TM801 SPEAKER A
TM802 SPEAKER B
L-CH
R-CH
OUTPUT
S701 SPEAKERS
CNJ701 HEADPHONES
POWER METER (P)
POWER METER (L)
BASS
HIGH FILTER
LOW FILTER
RV403,453 100k/100k(SPECIAL)
• IC501 HA12002
RELAY DRIVER
SWITCHING
DC DET
THERMAL DET
AC DET
C801 10000 63V
C802 10000 63V
(CHASSIS)
CNJ802
CNJ801
AC OUTLET
PT801 POWER
CNP801 AC IN
S801 POWER
US, CANADIAN MODEL
(AEP, UK, E MODEL)
(US, CANADIAN MODEL)
F601 10A THERMAL FUSE
F602 6.3A
2A (AEP, UK, E MODEL)
CB601 2.5A (US, CANADIAN MODEL)

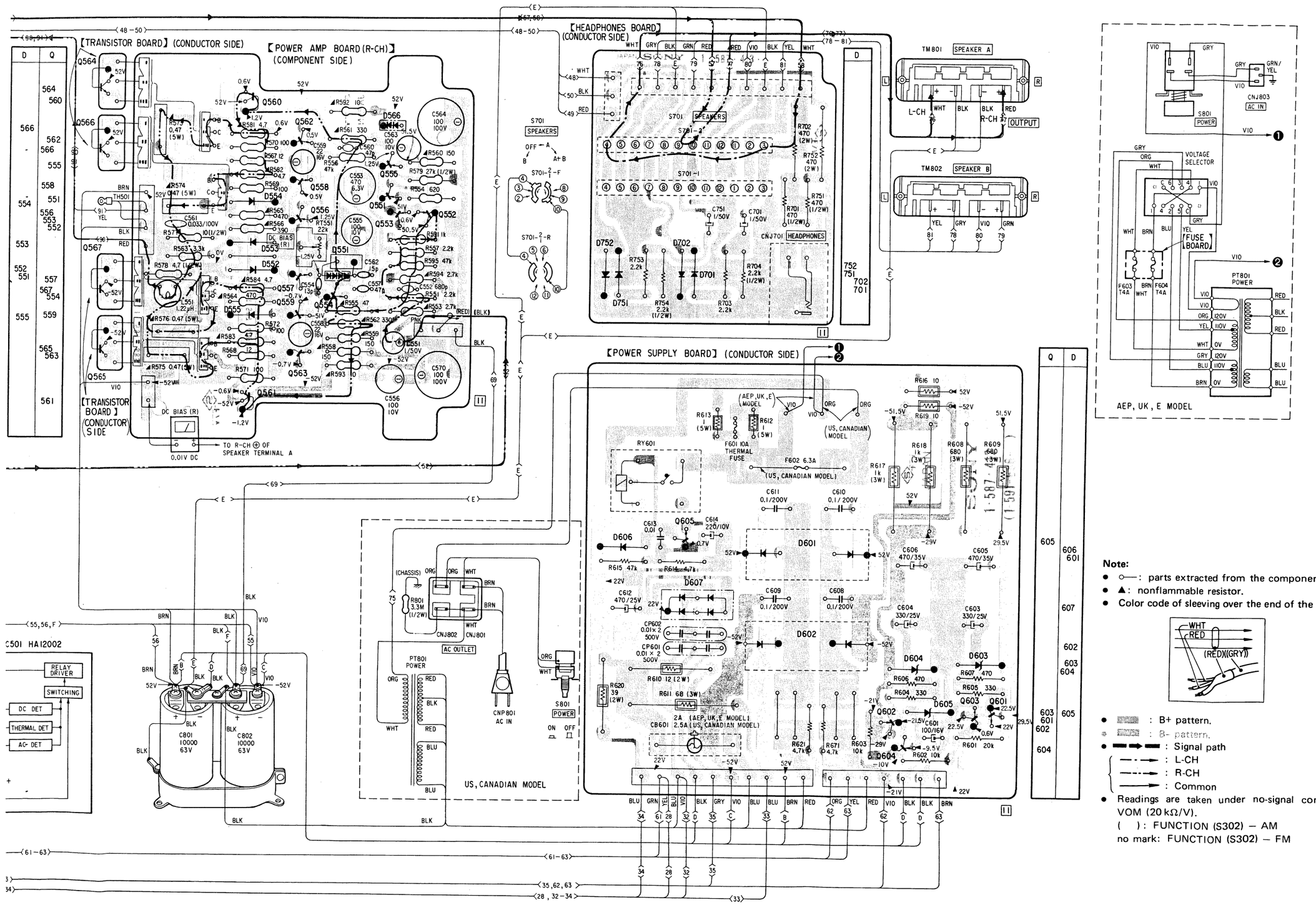

Note:

- ○—: parts extracted from the component side.
- ▲: nonflammable resistor.
- Color code of sleeving over the end of the jacket.

- : B+ pattern.
- : B- pattern.
- : Signal path
  - : L-CH
  - : R-CH
  - : Common
- Readings are taken under no-signal conditions with a VOM (20 kΩ/V).
  ( ): FUNCTION (S302) – AM
  no mark: FUNCTION (S302) – FM

4-5. SCHEMATIC DIAGRAM — Amplifier Section —

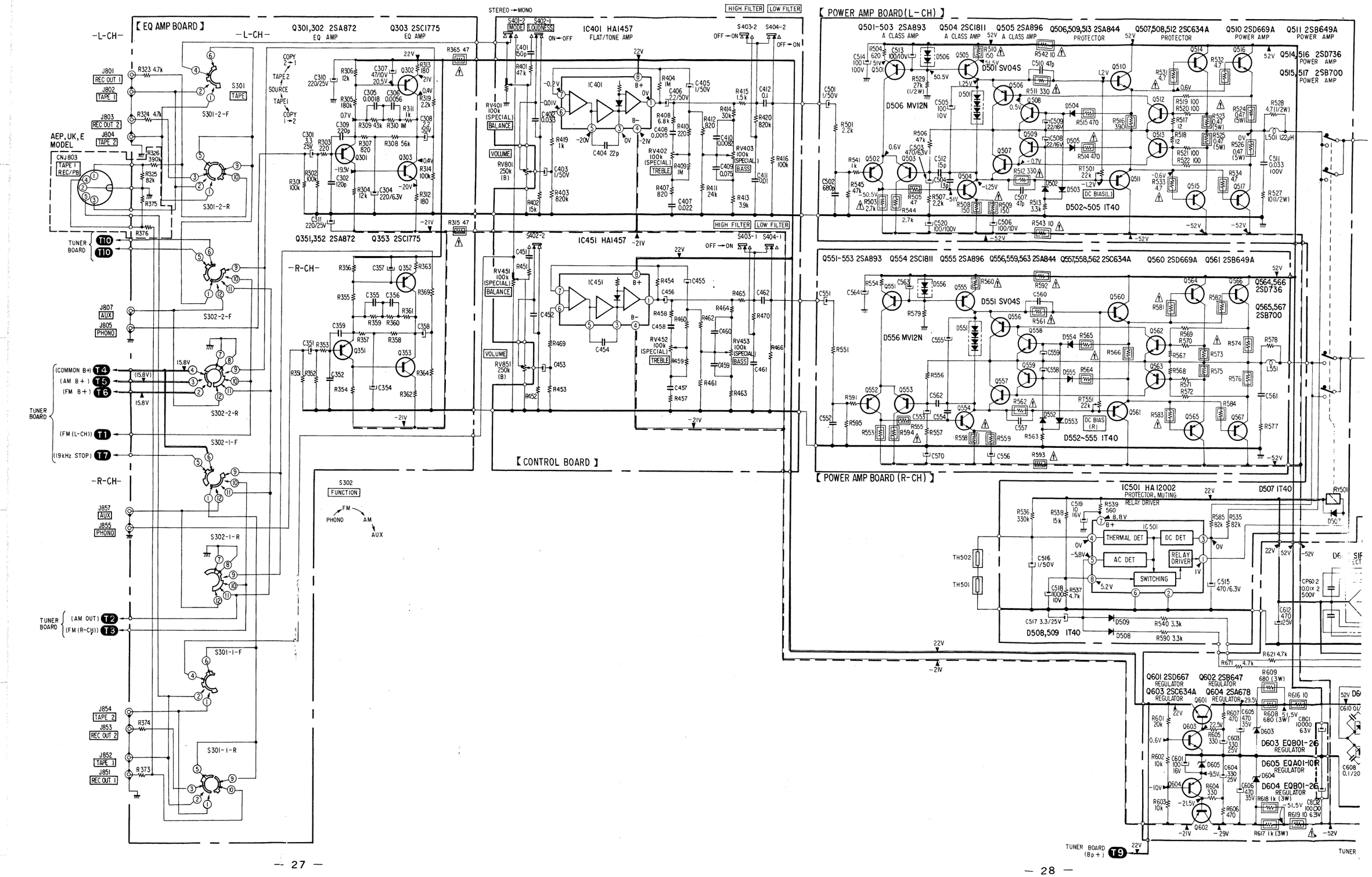

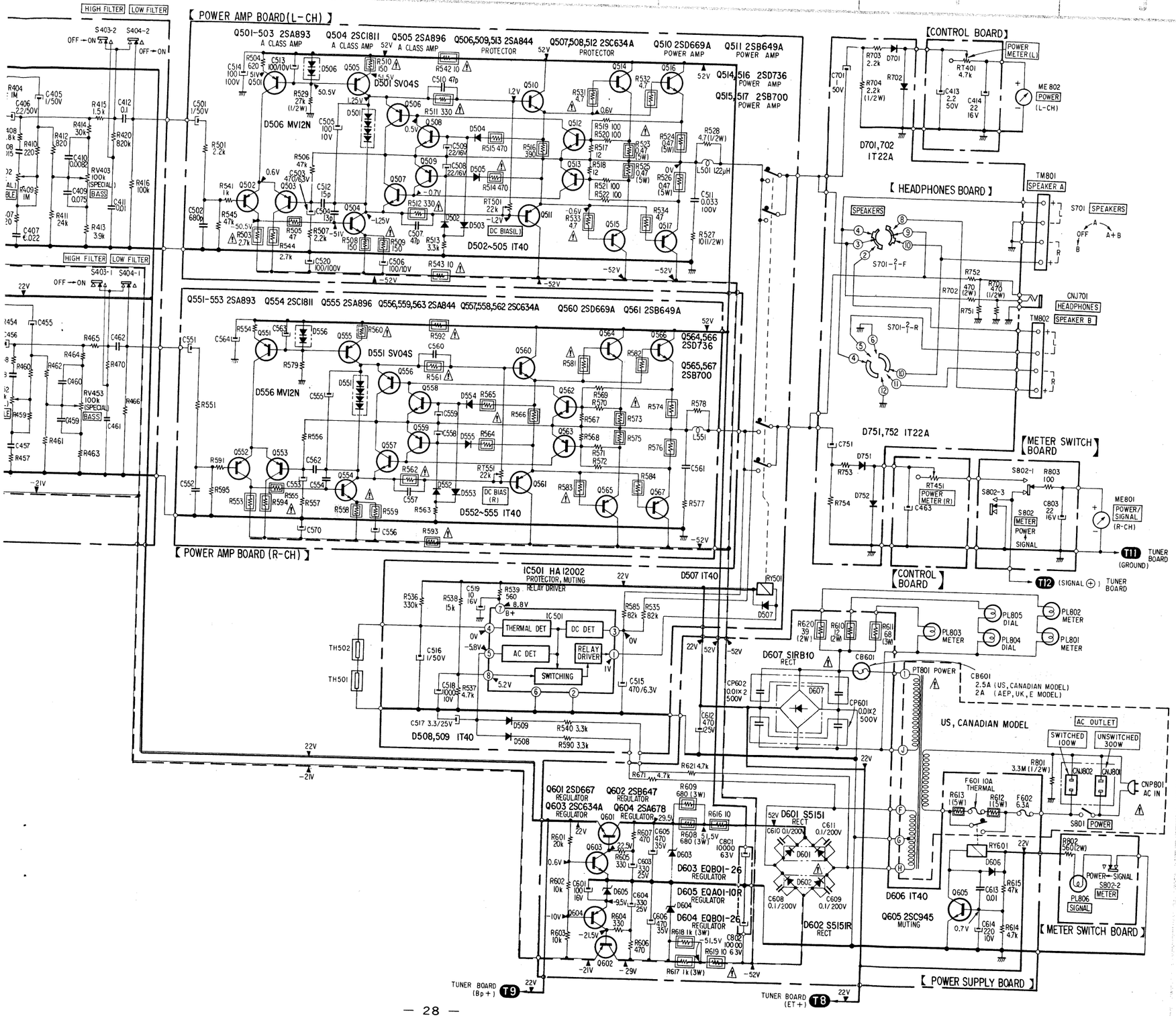

Note:

- Components for right channel have same values as for left channel.
- All capacitors are in μF unless otherwise noted. pF: μμF 50WV or less are not indicated except for electrolytics.
- All resistors are in ohms, ¼W unless otherwise noted. kΩ: 1000Ω; MΩ: 1000kΩ
- Voltage variations may be noted due to normal production tolerances.
- ▭ : nonflammable resistor.
- ⏚ : direct connection to points marked ⏚ on the chassis.
- ▭ : panel designation.
- ▭ : adjustment for repair.
- Readings are taken under no-signal conditions with a VOM (20kΩ/V).
  ( ): FUNCTION (S302) — AM
  no mark: FUNCTION (S302) — FM
- ——— : B+ bus.
- - - - : B- bus.
- Switch

Ref. No.	Switch	Position
S301-1, 2	TAPE	SOURCE
S302-1, 2	FUNCTION	PHONO
S401-1, 2	MODE	STEREO
S402-1, 2	LOUDNESS	OFF
S403-1, 2	HIGH FILTER	OFF
S404-1, 2	LOW FILTER	OFF
S701-1, 2	SPEAKERS	A
S801	POWER	OFF
S802-1 to -3	METER	SIGNAL

Note: The components identified by shading and mark ⚠ are critical for safety. Replace only with part number specified.

Note: Les composants identifiés par un tramé et une marque ⚠ sont critiques pour la sécurité. Ne les remplacer que par une pièce portant le numéro spécifié.

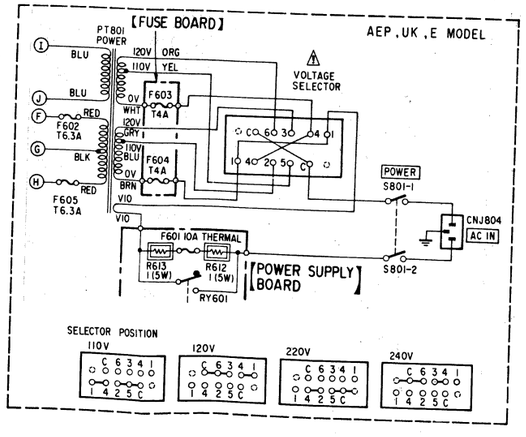

SECTION 5 EXPLODED VIEWS

(1)

Note:

- Items with no part number and/or no description are not stocked because they are seldom required for routine service.
- All screws are Phillips (cross recess) type unless otherwise noted. (–) = slotted head
- Circled letters (Ⓐ to Ⓩ) are applicable to European models only.

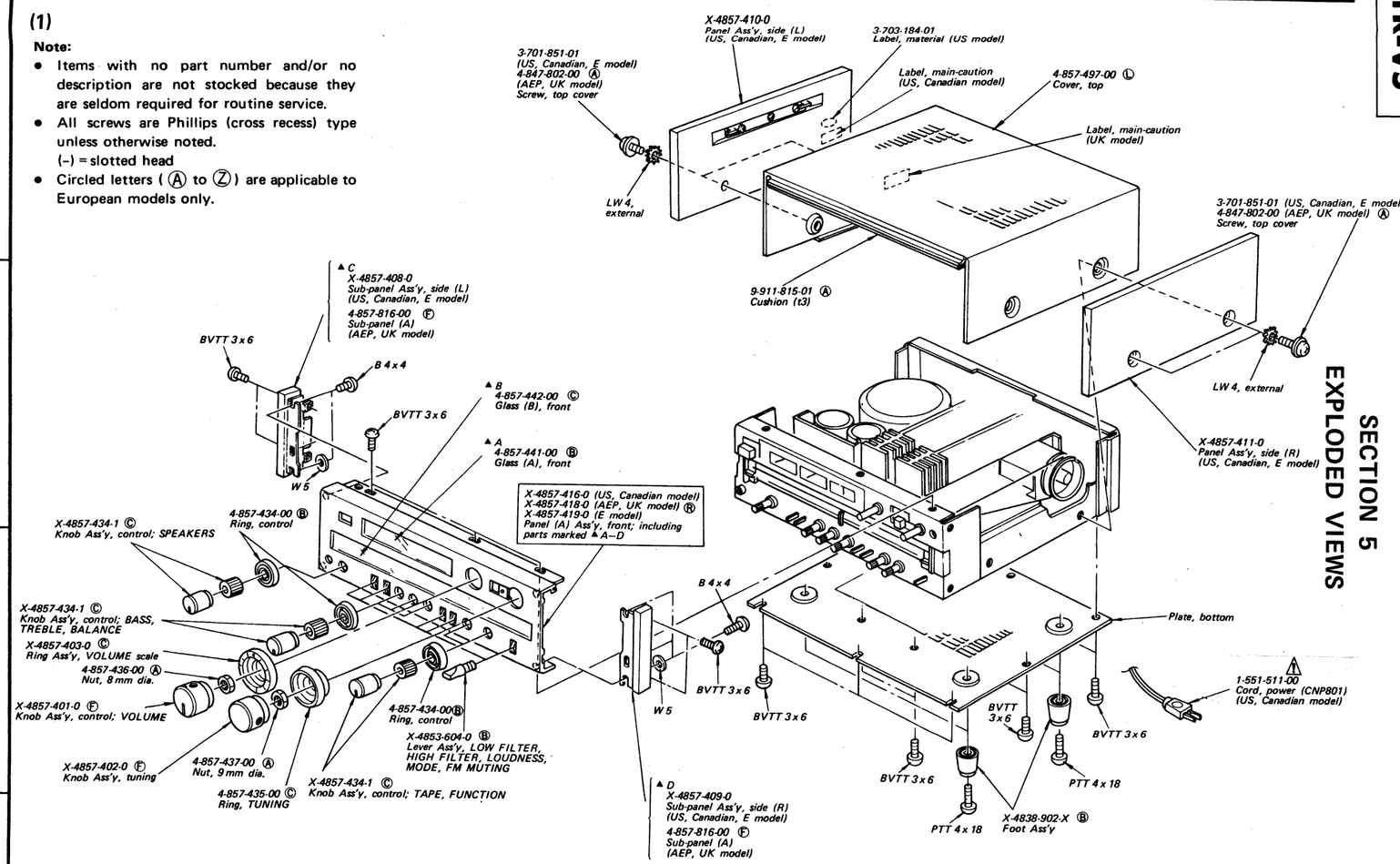

Note: The components identified by shading and mark ⚠ are critical for safety. Replace only with part number specified.

Note: Les composants identifiés par un tramé et une marque ⚠ sont critiques pour la sécurité. Ne les remplacer que par une pièce portant le numéro spécifié.

(2)

Note:

- Items with no part number and/or no description are not stocked because they are seldom required for routine service.
- All screws are Phillips (cross recess) type unless otherwise noted. (–) = slotted head
- Circled letters (Ⓐ to Ⓩ) are applicable to European models only.

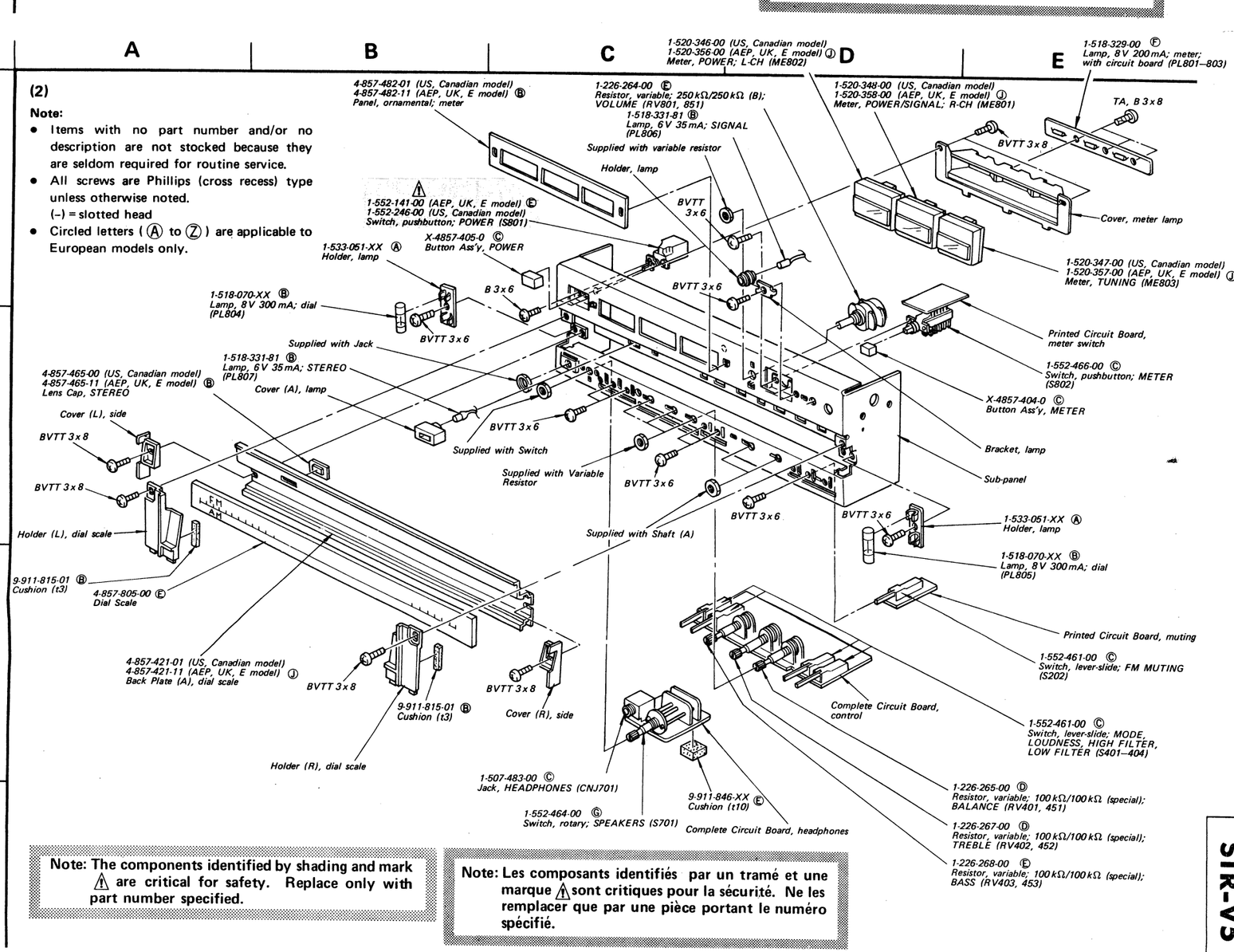

Note: The components identified by shading and mark ⚠ are critical for safety. Replace only with part number specified.

Note: Les composants identifiés par un tramé et une marque ⚠ sont critiques pour la sécurité. Ne les remplacer que par une pièce portant le numéro spécifié.

(3)

Note:

US, Canadian model	3-703-081-21 Label, sub-caution

(2)

Note:

- Items with no part number and/or no description are not stocked because they are seldom required for routine service.
- All screws are Phillips (cross recess) type unless otherwise noted.
  (–) = slotted head
- Circled letters (Ⓐ to Ⓩ) are applicable to European models only.

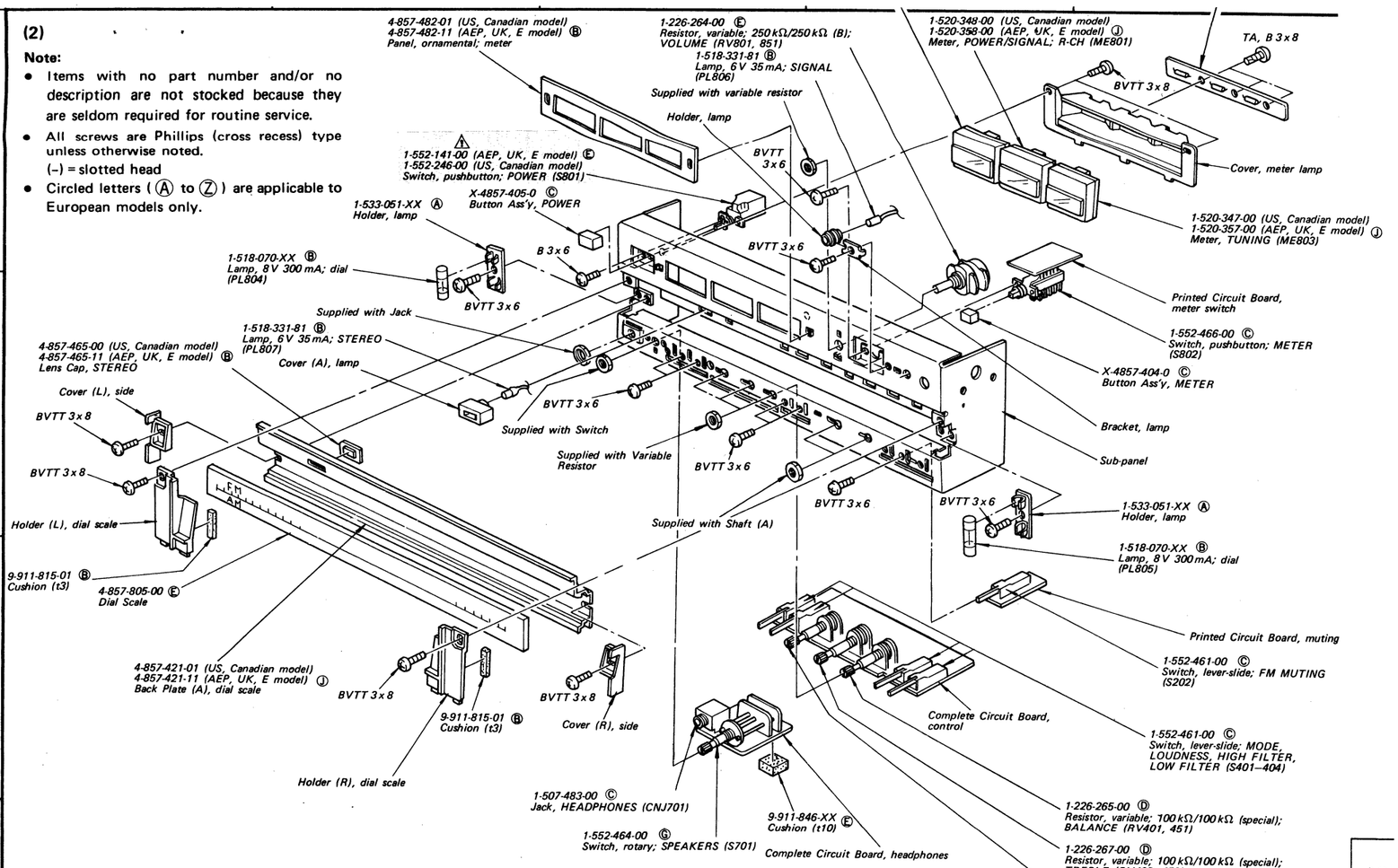

Note: The components identified by shading and mark ⚠ are critical for safety. Replace only with part number specified.

Note: Les composants identifiés par un tramé et une marque ⚠ sont critiques pour la sécurité. Ne les remplacer que par une pièce portant le numéro spécifié.

(3)

Note:

- Items with no part number and/or no description are not stocked because they are seldom required for routine service.
- All screws are Phillips (cross recess) type unless otherwise noted.
  (–) = slotted head
- Circled letters (Ⓐ to Ⓩ) are applicable to European models only.

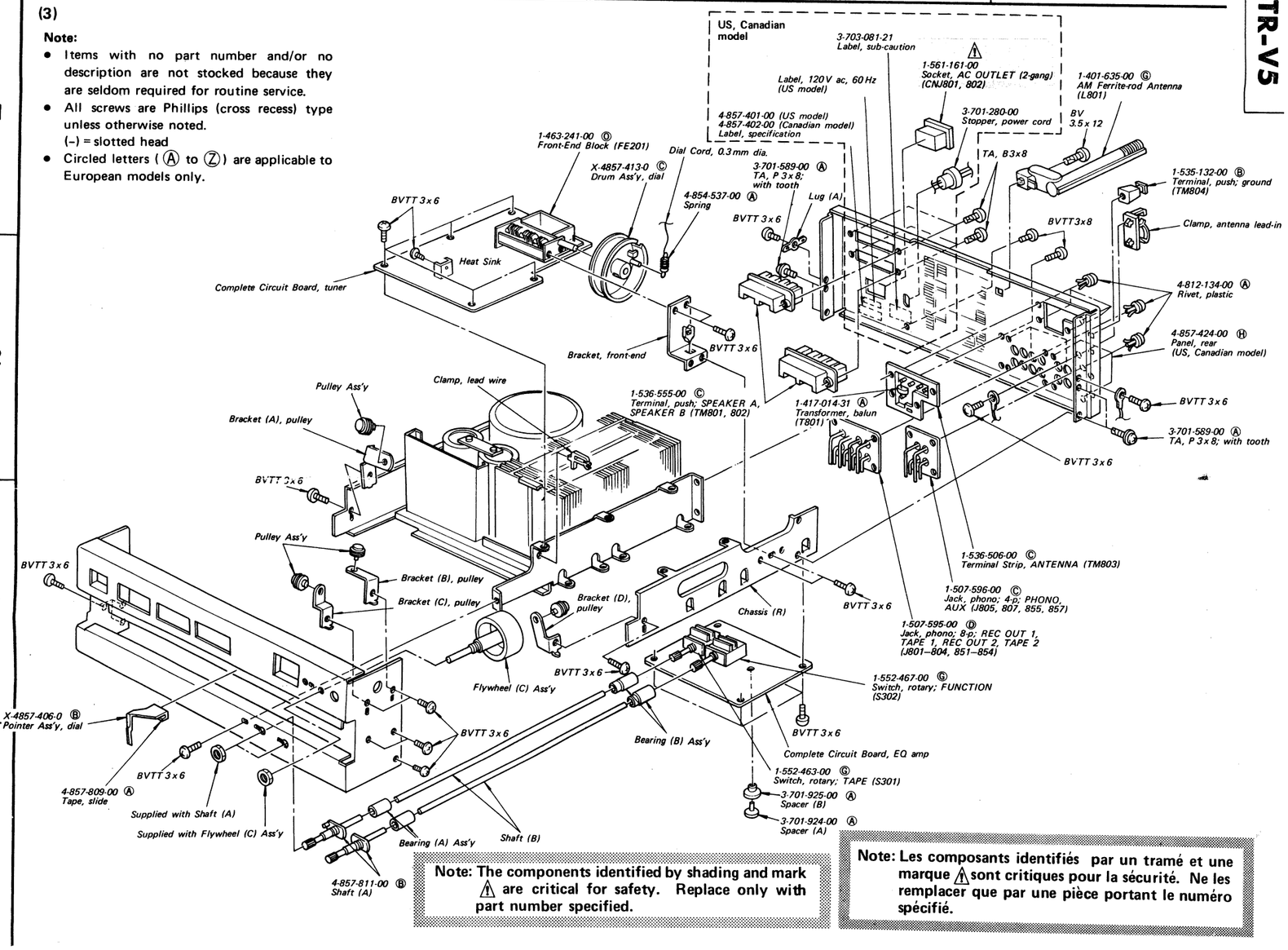

Note: The components identified by shading and mark ⚠ are critical for safety. Replace only with part number specified.

Note: Les composants identifiés par un tramé et une marque ⚠ sont critiques pour la sécurité. Ne les remplacer que par une pièce portant le numéro spécifié.

(4)

Note:

- Items with no part number and/or no description are not stocked because they are seldom required for routine service.
- All screws are Phillips (cross recess) type unless otherwise noted.
  (-) = slotted head
- Circled letters (Ⓐ to Ⓩ) are applicable to European models only.

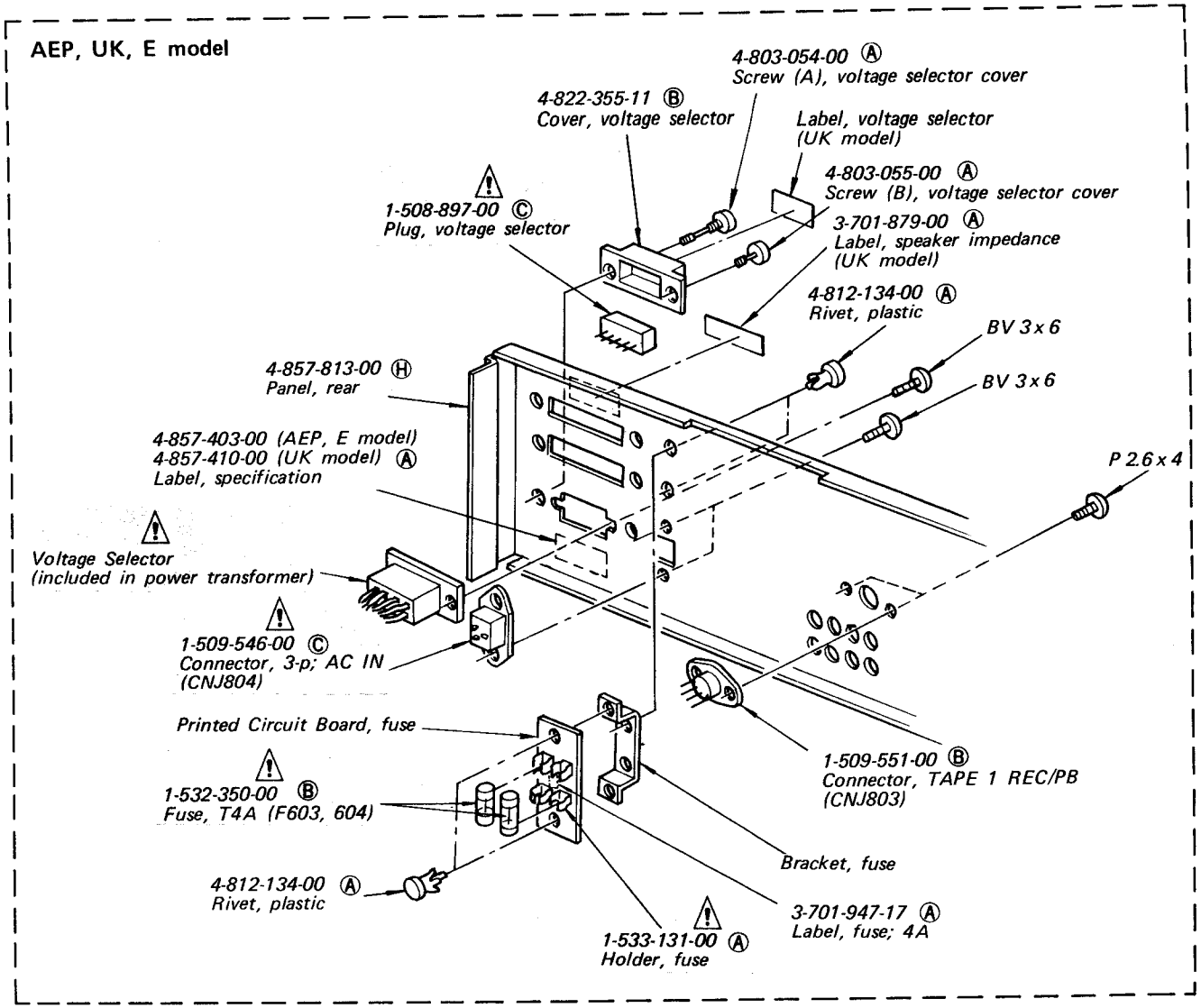

Note: The components identified by shading and mark ⚠ are critical for safety. Replace only with part number specified.

Note: Les composants identifiés par un tramé et une marque ⚠ sont critiques pour la sécurité. Ne les remplacer que par une pièce portant le numéro spécifié.

(5)

Note:

- Items with no part number and/or no description are not stocked because they are seldom required for routine service.
- All screws are Phillips (cross recess) type unless otherwise noted.
  (–) = slotted head
- Circled letters (Ⓐ to Ⓩ) are applicable to European models only.

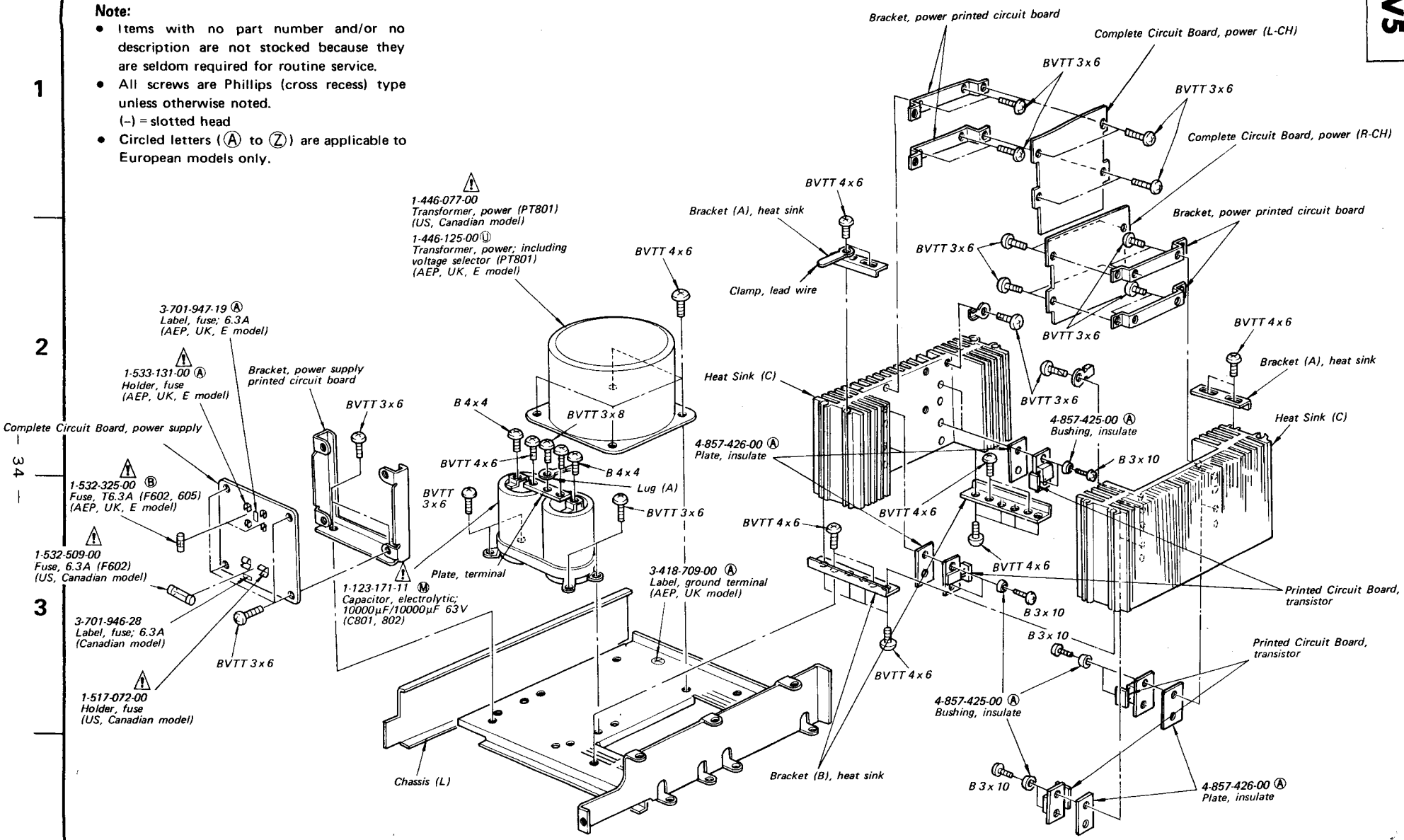

Note: The components identified by shading and mark ⚠ are critical for safety. Replace only with part number specified.

Note: Les composants identifiés par un tramé et une marque ⚠ sont critiques pour la sécurité. Ne les remplacer que par une pièce portant le numéro spécifié.

SECTION 6
ELECTRICAL PARTS LIST

Note: Circled letters (Ⓐ to Ⓩ) are applicable to European models only.

Ref. No.	Part No.	Description
		SEMICONDUCTORS
		Transistors
Q201–203	8-729-671-13	Ⓑ 2SC710
⇒ Q204	8-729-203-04	Ⓑ 2SK30A
⇒ Q205–208	8-729-663-47	Ⓑ 2SC1364
Q209	8-729-366-71	Ⓑ 2SD667
⇒ Q210	8-729-307-62	Ⓓ 2SD476A
⇒ Q301,351 ⇒ Q302,352	8-729-387-27	Ⓑ 2SA872-D
⇒ Q303,353	8-729-377-58	Ⓑ 2SC1775-E
⇒ Q501–503 ⇒ Q551–553	8-729-387-27	Ⓑ 2SA872-D
Q504,554	8-765-012-00	Ⓒ 2SC1811
Q505,555	8-765-082-20	Ⓒ 2SA896
⇒ Q506,556	8-727-788-00	Ⓑ 2SA678
⇒ Q507,557 ⇒ Q508,558	8-729-663-47	Ⓑ 2SC1364
⇒ Q509,559	8-727-788-00	Ⓑ 2SA678
⇒ Q510,560	8-729-366-92	Ⓒ 2SD669
⇒ Q511,561	8-729-364-92	Ⓑ 2SB649
⇒ Q512,562	8-729-663-47	Ⓑ 2SC1364
⇒ Q513,563	8-727-788-00	Ⓑ 2SA678
Q514,564	8-729-373-63	Ⓕ 2SD736
Q515,565	8-729-370-03	Ⓕ 2SB700
Q516,566	8-729-373-63	Ⓕ 2SD736
Q517,567	8-729-370-03	Ⓕ 2SB700
Q601	8-729-366-71	Ⓑ 2SD667
Q602	8-729-364-71	Ⓑ 2SB647
⇒ Q603	8-729-663-47	Ⓑ 2SC1364
Q604	8-727-788-00	Ⓑ 2SA678
⇒ Q605	8-729-663-47	Ⓑ 2SC1364
		ICs
IC201	8-759-310-37	Ⓗ HA1137W
IC202	8-759-311-96	Ⓖ HA1196
IC203	8-759-812-40	Ⓕ LA1240
IC401,451	8-759-314-57	Ⓒ HA1457
IC501	8-759-320-02	Ⓔ HA12002
		Diodes
⇒ D201,202	8-719-815-55	Ⓑ 1S1555
⇒ D203	8-719-422-21	Ⓐ 1T22AM
D204	8-719-912-00	Ⓑ MV12N
⇒ D205	8-719-815-55	Ⓑ 1S1555
⇒ D206	8-719-931-16	Ⓑ EQB01-16
D207	8-719-815-55	Ⓑ 1S1555
D501,551	8-719-300-11	Ⓑ SV04S
⇒ D502–505 ⇒ D552–555	8-719-815-55	Ⓑ 1S1555
D506,556	8-719-912-00	Ⓑ MV12N
⇒ D507–509	8-719-815-55	Ⓑ 1S1555
D601	⚠ 8-719-851-51	Ⓕ S5151
D602	⚠ 8-719-801-51	Ⓕ S5151R
D603,604	8-719-931-26	Ⓑ EQB01-26
⇒ D605	8-719-931-10	Ⓑ EQB01-10
⇒ D606	8-719-815-55	Ⓑ 1S1555
D607	⚠ 8-719-510-10	Ⓒ SIRB10
⇒ D701,751 ⇒ D702,752	8-719-422-21	Ⓑ 1T22AM
		Thermistors
TH501,502	1-800-427-00	Ⓑ Positive
		COILS
L201	1-459-152-00	Ⓑ With Core
L202	1-407-169-XX	Ⓐ 100μH, microinductor
L203	1-407-182-XX	Ⓐ 2.2μH, microinductor
L204	1-407-157-XX	Ⓐ 10μH, microinductor
L205	1-407-182-XX	Ⓐ 2.2μH, microinductor
L801	1-401-635-00	Ⓖ AM Ferrite-rod Antenna
		TRANSFORMERS
CFT201	1-404-086-00	AM IFT (US, Canadian model)

⇒: Due to standardization, interchangeable replacements may be substituted for parts specified in the diagrams.

Note: The components identified by shading and mark ⚠ are critical for safety. Replace only with part number specified.

Note: Les composants identifiés par un tramé et une marque ⚠ sont critiques pour la sécurité. Ne les remplacer que par une pièce portant le numéro spécifié.

Note: Circled letters (Ⓐ to Ⓩ) are applicable to European models only.

Ref. No.	Part No.	Description
CFT201	1-404-087-00	Ⓓ AM IFT (AEP, UK, E model)
IFT201	1-404-011-00	Ⓒ FM Discriminator
IFT202	1-404-085-00	Ⓑ AM IFT
PT801	⚠ 1-446-077-00	Power (US, Canadian model)
PT801	⚠ 1-446-125-00	Ⓤ Power, including voltage selector (AEP, UK, E model)
T201	1-405-779-00	Ⓑ Osc
T801	1-417-014-31	Ⓑ Balun

CAPACITORS

All capacitors are in μF and ceramic unless otherwise noted.
50WV or less are not indicated except for electrolytics. p: μμF, elect: electrolytic

Ref. No.	Part No.	Description		
C201	1-102-967-11	Ⓐ 22p		
C202,203, C205	1-101-924-11	Ⓐ 0.022		
C206	1-121-409-11	Ⓐ 47	16V	elect
C207	1-101-925-11	Ⓐ 0.047		
C208	1-101-924-11	Ⓐ 0.022		
C209,210	1-101-925-11	Ⓐ 0.047		
C211	1-101-924-11	Ⓐ 0.022		
C212	1-121-426-11	Ⓑ 470	16V	elect
C213	1-101-924-11	Ⓐ 0.022		
C214	1-121-450-11	Ⓐ 2.2	50V	elect
C215	1-102-969-11	Ⓐ 33p		
C216	1-121-651-11	Ⓐ 10	16V	elect
C217	1-121-395-11	Ⓐ 4.7	25V	elect
C218	1-121-651-11	Ⓐ 10	16V	elect
C219	1-121-450-11	Ⓐ 2.2	50V	elect
C220	1-121-419-11	Ⓑ 220	6.3V	elect
C221,222	1-121-726-11	Ⓐ 0.47	50V	elect
C223	1-123-069-11	Ⓐ 330	16V	elect
C224	1-121-395-11	Ⓐ 4.7	25V	elect
C225	1-131-211-11	Ⓑ 0.22	35V	tantalum
C226	1-104-066-11	Ⓐ 360p		polystyrol
C227	1-121-651-11	Ⓐ 10	16V	elect
C228	1-108-556-12	Ⓐ 0.0011 (AEP, UK, E model)		mylar
C228	1-108-561-11	0.0018 (US, Canadian model)		mylar
C229	1-104-072-11	Ⓐ 620p (AEP, UK, E model)		polystyrol
C230	1-121-450-11	Ⓐ 2.2	50V	elect
C231	1-101-881-11	Ⓐ 47p		
C232	1-108-556-12	Ⓐ 0.0011 (AEP, UK, E model)		mylar
C232	1-108-561-12	0.0018 (US, Canadian model)		mylar
C233	1-104-072-11	Ⓐ 620p (AEP, UK, E model)		polystyrol
C234	1-121-450-11	Ⓐ 2.2	50V	elect
C235	1-121-651-11	Ⓐ 10	16V	elect
C236	1-131-237-11	Ⓑ 1.5	25V	tantalum
C237	1-131-197-11	Ⓑ 3.3	16V	tantalum
C238	1-108-246-12	Ⓐ 0.047		mylar
C239–241	1-101-924-11	Ⓐ 0.022		
C242	1-121-479-11	Ⓐ 22	16V	elect
C243	1-101-918-11	Ⓐ 0.001		
C244	1-101-924-11	Ⓐ 0.022		
C245	1-123-193-11	Ⓐ 100	16V	elect
C246	1-121-395-11	Ⓐ 4.7	25V	elect
C247	1-121-392-11	Ⓐ 3.3	25V	elect
C248	1-101-923-11	Ⓐ 0.01		
C249	1-108-244-12	Ⓐ 0.033		mylar
C250	1-108-230-12	Ⓐ 0.0022		mylar
C251	1-108-242-12	Ⓐ 0.022		mylar
C252	1-101-918-11	Ⓐ 0.001		
C253	1-101-924-11	Ⓐ 0.022		
C254	1-102-960-11	Ⓐ 24p		
C255	1-104-067-11	Ⓐ 390p		polystyrol
C256	1-101-924-11	Ⓐ 0.022		
C257	1-121-651-11	Ⓐ 10	16V	elect
C258	1-121-416-11	Ⓑ 100	25V	elect
C259	1-121-733-11	Ⓑ 470	25V	elect
C260	1-123-193-11	Ⓐ 100	16V	elect
C261	1-121-415-11	Ⓐ 100	16V	elect

Note: The components identified by shading and mark ⚠ are critical for safety. Replace only with part number specified.

Note: Les composants identifiés par un tramé et une marque ⚠ sont critiques pour la sécurité. Ne les remplacer que par une pièce portant le numéro spécifié.

Note: Circled letters (Ⓐ to Ⓩ) are applicable to European models only.

Ref. No.	Part No.	Description			
C262	1-101-925-11	Ⓐ 0.047			
C301,351	1-121-913-11	Ⓐ 3.3	25V	elect	
C302,352	1-102-816-11	Ⓐ 120p			
C304,354	1-121-419-11	Ⓑ 220	6.3V	elect	
C305,355	1-108-561-12	Ⓐ 0.0018		mylar	
C306,356	1-108-573-12	Ⓐ 0.0056		mylar	
C307,357	1-121-352-11	Ⓐ 47	10V	elect	
C308,358	1-123-050-11	Ⓐ 2.2	50V	elect	
C310,311	1-121-936-11	Ⓑ 220	25V	elect	
C401,451	1-101-361-11	Ⓐ 150p			
C402,452	1-108-591-12	Ⓐ 0.033		mylar	
C403,453	1-121-912-11	Ⓐ 1	50V	elect	
C404,454	1-102-959-11	Ⓐ 22p			
C405,455	1-121-912-11	Ⓐ 1	50V	elect	
C406,456	1-123-050-11	Ⓐ 2.2	50V	elect	
C407,457	1-108-587-12	Ⓐ 0.022		mylar	
C408,458	1-108-559-12	Ⓐ 0.0015		mylar	
C409,459	1-108-600-12	Ⓑ 0.075		mylar	
C410,460	1-108-577-12	Ⓐ 0.0082		mylar	
C411,461	1-108-579-12	Ⓐ 0.01		mylar	
C412,462	1-108-603-12	Ⓑ 0.1		mylar	
C413,463	1-121-450-11	Ⓐ 2.2	50V	elect	
C414	1-121-479-11	Ⓐ 22	16V	elect	
C501,551	1-121-391-11	Ⓐ 1	50V	elect	
C502,552	1-102-116-11	Ⓐ 680p			
C503,553	1-121-424-11	Ⓑ 470	6.3V	elect	
C504,554	1-102-950-11	Ⓐ 13p			
C505,555, C506,556	1-121-414-11	Ⓐ 100	10V	elect	
C507,557	1-101-880-11	Ⓐ 47p			
C508,558, C509,559	1-121-479-11	Ⓐ 22	16V	elect	
C510,560	1-101-880-11	Ⓐ 47p			
C511,561	1-106-208-12	Ⓐ 0.033	100V	mylar	
C512,562	1-102-951-11	Ⓐ 15p			
C513,563	1-121-414-11	Ⓐ 100	10V	elect	
C514,564	1-123-084-11	Ⓒ 100	100V	elect	
C515	1-121-424-11	Ⓑ 470	6.3V	elect	
C516	1-121-391-11	Ⓐ 1	50V	elect	

Note: The components identified by shading and mark ⚠ are critical for safety. Replace only with part number specified.

Ref. No.	Part No.	Description			
C517	1-121-392-11	Ⓐ 3.3	25V	elect	
C518	1-121-736-11	Ⓑ 1000	10V	elect	
C519	1-121-651-11	Ⓐ 10	16V	elect	
C520,570	1-123-084-11	Ⓒ 100	100V	elect	
C601	1-123-193-11	Ⓐ 100	16V	elect	
C603,604	1-123-065-11	Ⓑ 330	25V	elect	
C605,606	1-121-941-11	Ⓑ 470	35V	elect	
C608–611	1-108-433-12	Ⓑ 0.1	200V	mylar	
C612	1-121-940-11	Ⓑ 470	25V	elect	
C613	1-102-129-11	Ⓐ 0.01			
C614	1-123-072-11	Ⓑ 220	10V	elect	
C701,751	1-121-391-11	Ⓐ 1	50V	elect	
C801,802 ⚠	1-123-171-11	Ⓜ 10000/10000	63V	elect	
C803	1-121-479-11	Ⓐ 22	16V	elect	
CP601,602	1-102-355-11	Ⓐ 0.01/0.01	500V		

RESISTORS

All resistors are in ohms. Common ¼W carbon resistors are omitted.
Refer to the list on page 41 for their part numbers.

R211	⚠ 1-211-506-11	Ⓐ 22	¼W	carbon (nonflammable)
R215	⚠ 1-211-526-11	Ⓒ 150	¼W	carbon (nonflammable)
R240	1-244-861-11	Ⓐ 330	½W	carbon
R252	⚠ 1-211-630-11	Ⓑ 470	½W	carbon (nonflammable)
R255	1-244-891-11	Ⓐ 5.6 k	½W	carbon
R265,266	⚠ 1-211-534-11	Ⓒ 330	¼W	carbon (nonflammable)
R267	⚠ 1-211-522-11	Ⓒ 100	¼W	carbon (nonflammable)
R268	⚠ 1-211-506-11	Ⓐ 22	¼W	carbon (nonflammable)
R271	⚠ 1-211-490-11	Ⓐ 4.7	¼W	carbon (nonflammable)
R315,365	⚠ 1-211-514-11	Ⓐ 47	¼W	carbon (nonflammable)

Note: Les composants identifiés par un tramé et une marque ⚠ sont critiques pour la sécurité. Ne les remplacer que par une pièce portant le numéro spécifié.

STR-V5

Note: Circled letters (Ⓐ to Ⓩ) are applicable to European models only.

Ref. No.	Part No.		Description		
R503,553	⚠1-211-553-11	Ⓒ	2.7 k	¼W	carbon (nonflammable)
R505,555	⚠1-211-514-11	Ⓐ	47	¼W	carbon (nonflammable)
R508–510, R558–560	⚠1-211-526-11	Ⓒ	150	¼W	carbon (nonflammable)
R511,561, R512,562	⚠1-211-534-11	Ⓒ	330	¼W	carbon (nonflammable)
R514,564, R515,565	⚠1-211-538-11	Ⓐ	470	¼W	carbon (nonflammable)
R516,566	⚠1-211-536-11	Ⓑ	390	¼W	carbon (nonflammable)
R523–526, R573–576	⚠1-217-158-11	Ⓐ	0.47	5W	metal oxide (nonflammable)
R527,577	1-244-825-11	Ⓐ	10	½W	carbon
R528,578	1-244-817-11	Ⓐ	4.7	½W	carbon
R529,579	1-244-907-11	Ⓐ	27 k	½W	carbon
R531–534, R581–584	⚠1-211-490-11	Ⓐ	4.7	¼W	carbon (nonflammable)
R542,592, R543,593	⚠1-211-498-11	Ⓐ	10	¼W	carbon (nonflammable)
R544,594	⚠1-211-553-11	Ⓒ	2.7 k	¼W	carbon (nonflammable)
R608,609	⚠1-206-721-11	Ⓑ	680	3W	metal oxide (nonflammable)
R610	⚠1-206-465-11	Ⓐ	12	2W	metal oxide (nonflammable)
R611	⚠1-206-531-11	Ⓑ	68	3W	metal oxide (nonflammable)
R612,613	⚠1-217-160-11	Ⓑ	1	5W	metal oxide (nonflammable)
R616	⚠1-211-498-11	Ⓐ	10	¼W	carbon (nonflammable)
R617,618	⚠1-206-725-11	Ⓑ	1 k	3W	metal oxide (nonflammable)
R619	⚠1-211-498-11	Ⓐ	10	¼W	carbon (nonflammable)
R620	⚠1-206-477-11	Ⓐ	39	2W	metal oxide (nonflammable)
R701,751	1-244-865-11	Ⓐ	470	½W	carbon
R702,752	1-206-656-11	Ⓐ	470	2W	metal oxide

Note: The components identified by shading and mark ⚠ are critical for safety. Replace only with part number specified.

Ref. No.	Part No.		Description		
R704,754	1-244-881-11	Ⓐ	2.2 k	½W	carbon
R801	⚠1-202-725-11		3.3 M (US, Canadian model)	½W	composition
R802	1-206-658-11	Ⓐ	560	2W	metal oxide
RT201	1-224-646-XX	Ⓑ	22 k (B), adjustable; signal meter		
RT202	1-224-647-XX	Ⓑ	47 k (B), adjustable; FM output level		
RT203	1-224-645-XX	Ⓑ	10 k (B), adjustable; 19 kHz adj		
RT204	1-224-552-31	Ⓑ	470 k (B), adjustable; FM stereo separation		
RT401,451	1-224-644-XX	Ⓑ	4.7 k (B), adjustable; power meter (L), power meter (R)		
RT501,551	1-224-491-00	Ⓑ	22 k (B), adjustable; dc bias (L), dc bias (R)		
RV401,451	1-226-265-00	Ⓓ	100 k/100 k (special), variable; BALANCE		
RV402,452	1-226-267-00	Ⓓ	100 k/100 k (special), variable; TREBLE		
RV403,453	1-226-268-00	Ⓔ	100 k/100 k (special), variable; BASS		
RV801,851	1-226-264-00	Ⓔ	250 k/250 k (B), variable; VOLUME		

SWITCHES

S201	1-552-130-00	Ⓑ	Deemphasis (AEP, UK, E model)
S202	1-552-461-00	Ⓒ	Lever-slide, FM MUTING
S301	1-552-463-00	Ⓖ	Rotary, TAPE
S302	1-552-467-00	Ⓖ	Rotary, FUNCTION
S401	1-552-461-00	Ⓒ	Lever-slide, MODE
S402	1-552-461-00	Ⓒ	Lever-slide, LOUDNESS
S403	1-552-461-00	Ⓒ	Lever-slide, HIGH FILTER
S404	1-552-461-00	Ⓒ	Lever-slide, LOW FILTER
S701	1-552-464-00	Ⓖ	Rotary, SPEAKERS
S801	⚠1-552-141-00	Ⓔ	Pushbutton, POWER (AEP, UK, E model)
S801	⚠1-552-246-00		Pushbutton, POWER (US, Canadian model)
S802	1-552-466-00	Ⓒ	Pushbutton, METER

Note: Les composants identifiés par un tramé et une marque ⚠ sont critiques pour la sécurité. Ne les remplacer que par une pièce portant le numéro spécifié.

Note: Circled letters (Ⓐ to Ⓩ) are applicable to European models only.

Ref. No.	Part No.		Description
			JACKS & CONNECTORS
CNJ701	1-507-483-00	Ⓒ	Jack, HEADPHONES
CNJ801,802	⚠1-561-161-00		Socket, AC OUTLET (2-gang) (US, Canadian model)
CNJ803	1-509-551-00	Ⓑ	Connector, TAPE 1 REC/PB (AEP, UK, E model)
CNJ804	⚠1-509-546-00	Ⓒ	Connector, 3p; AC IN (AEP, UK, E model)
J801–804, J851–854	1-507-595-00	Ⓓ	Jack, phono; 8p; REC OUT 1, TAPE 1, REC OUT 2, TAPE 2
J805,807, J855,857	1-507-596-00	Ⓒ	Jack, phono; 4p; PHONO, AUX
			FUSES
F601	⚠1-532-496-00	Ⓒ	10A, thermal
F602	⚠1-532-325-00	Ⓑ	T6.3A (AEP, UK, E model)
F602	⚠1-532-509-00		6.3A (US, Canadian model)
F603,604	⚠1-532-350-00	Ⓑ	T4A (AEP, UK, E model)
F605	⚠1-532-325-00	Ⓑ	T6.3A (AEP, UK, E model)
			METERS
ME801	1-520-348-00		POWER/SIGNAL, R-CH (US, Canadian model)
ME801	1-520-358-00	Ⓙ	POWER/SIGNAL, R-CH (AEP, UK, E model)
ME802	1-520-346-00		POWER, L-CH (US, Canadian model)
ME802	1-520-356-00	Ⓙ	POWER, L-CH (AEP, UK, E model)
ME803	1-520-347-00		TUNING (US, Canadian model)
ME803	1-520-357-00	Ⓙ	TUNING (AEP, UK, E model)
			LAMPS
PL801–803	1-518-329-00	Ⓕ	8V 200mA, meter; with circuit board
PL804,805	1-518-070-XX	Ⓑ	8V 300mA, dial
PL806	1-518-331-81	Ⓑ	6V 35mA, SIGNAL
PL807	1-518-331-81	Ⓑ	6V 35mA, STEREO

Ref. No.	Part No.		Description
			MISCELLANEOUS
CB601	⚠1-532-531-00	Ⓒ	Circuit Breaker, 2A (AEP, UK, E model)
CB601	⚠1-532-521-00		Circuit Breaker, 2.5A (US, Canadian model)
CF201–203	1-527-307-XX	Ⓑ	Filter, ceramic
CNP801	⚠1-551-511-00		Cord, power (US, Canadian model)
FE201	1-463-241-00	Ⓞ	Front End Block
LPF201,202	1-231-360-00	Ⓔ	Filter, low-pass
RY501	1-515-302-00	Ⓕ	Relay
RY601	⚠1-515-278-00	Ⓕ	Relay
TM801,802	1-536-555-00	Ⓒ	Terminal, push; SPEAKER A, SPEAKER B
TM803	1-536-506-00	Ⓒ	Terminal Strip, ANTENNA
TM804	1-535-132-00	Ⓑ	Terminal, push; ground
	⚠1-508-897-00	Ⓒ	Plug, voltage selector (AEP, UK, E model)
	⚠1-517-072-00		Holder, fuse (US, Canadian model)
	1-533-051-XX	Ⓐ	Holder, lamp
	⚠1-533-131-00	Ⓐ	Holder, fuse (AEP, UK, E model)

Note: The components identified by shading and mark ⚠ are critical for safety. Replace only with part number specified.

Note: Les composants identifiés par un tramé et une marque ⚠ sont critiques pour la sécurité. Ne les remplacer que par une pièce portant le numéro spécifié.

STR-V5

Note: Circled letters (Ⓐ to Ⓩ) are applicable to European models only.

ACCESSORY AND PACKING MATERIALS

Part No.	*Description*
X-4490-002-1	Ⓐ Cloth Ass'y, polishing
1-501-161-00	Ⓕ Antenna, feeder
1-506-113-00	Ⓑ Plug, short
⚠ 1-534-754-00	Cord, power; parallel-blade plug (E2 model)
⚠ 1-534-819-00	Ⓖ Cord, power (UK model)
⚠ 1-551-216-00	Cord, power; euro-plug (E1 model)
3-701-020-00	Ⓐ Bag, check sheet
3-701-622-00	Ⓐ Bag, plastic
3-770-507-11	Ⓕ Manual, instruction (AEP, UK, E model)
3-770-507-21	Manual, instruction (US model)
3-770-507-21 3-794-258-31	Manual, instruction (Canadian model)
3-794-233-21	Separate Sheet, consumer products (US model)
4-857-819-00	Cushion, upper (US, Canadian, E model)
4-857-820-00	Cushion, lower (US, Canadian, E model)
4-857-822-00	Carton (US, Canadian model)
4-857-826-00	Ⓒ Bag, protection
4-857-893-00	Ⓖ Carton (AEP, UK, E model)
4-857-896-00	Ⓒ Cushion, upper (AEP, UK model)
4-857-897-00	Ⓒ Cushion, lower (AEP, UK model)

Note: The components identified by shading and mark ⚠ are critical for safety. Replace only with part number specified.

Note: Les composants identifiés par un tramé et une marque ⚠ sont critiques pour la sécurité. Ne les remplacer que par une pièce portant le numéro spécifié.

1/4 WATT CARBON RESISTORS Ⓐ

Note: Circled letter Ⓐ is applicable to European models only.

Ω	Part No.	Ω	Part No.	Ω	Part No.	Ω	Part No.	Ω	Part No.	Ω	Part No.	Ω	Part No.
1.0	1-244-601-11	10	1-244-625-11	100	1-244-649-11	1.0k	1-244-673-11	10k	1-244-697-11	100k	1-244-721-11	1.0M	1-244-745-11
1.1	1-244-602-11	11	1-244-626-11	110	1-244-650-11	1.1k	1-244-674-11	11k	1-244-698-11	110k	1-244-722-11	1.1M	1-244-746-11
1.2	1-244-603-11	12	1-244-627-11	120	1-244-651-11	1.2k	1-244-675-11	12k	1-244-699-11	120k	1-244-723-11	1.2M	1-244-747-11
1.3	1-244-604-11	13	1-244-628-11	130	1-244-652-11	1.3k	1-244-676-11	13k	1-244-700-11	130k	1-244-724-11	1.3M	1-244-748-11
1.5	1-244-605-11	15	1-244-629-11	150	1-244-653-11	1.5k	1-244-677-11	15k	1-244-701-11	150k	1-244-725-11	1.5M	1-244-749-11
1.6	1-244-606-11	16	1-244-630-11	160	1-244-654-11	1.6k	1-244-678-11	16k	1-244-702-11	160k	1-244-726-11	1.6M	1-244-750-11
1.8	1-244-607-11	18	1-244-631-11	180	1-244-655-11	1.8k	1-244-679-11	18k	1-244-703-11	180k	1-244-737-11	1.8M	1-244-751-11
2.0	1-244-608-11	20	1-244-632-11	200	1-244-656-11	2.0k	1-244-680-11	20k	1-244-704-11	200k	1-244-728-11	2.0M	1-244-752-11
2.2	1-244-609-11	22	1-244-633-11	220	1-244-657-11	2.2k	1-244-681-11	22k	1-244-705-11	220k	1-244-729-11	2.2M	1-244-753-11
2.4	1-244-610-11	24	1-244-634-11	240	1-244-658-11	2.4k	1-244-682-11	24k	1-244-706-11	240k	1-244-730-11	2.4M	1-244-754-11
2.7	1-244-611-11	27	1-244-635-11	270	1-244-659-11	2.7k	1-244-683-11	27k	1-244-707-11	270k	1-244-731-11	2.7M	1-244-755-11
3.0	1-244-612-11	30	1-244-636-11	300	1-244-660-11	3.0k	1-244-684-11	30k	1-244-708-11	300k	1-244-732-11	3.0M	1-244-756-11
3.3	1-244-613-11	33	1-244-637-11	330	1-244-661-11	3.3k	1-244-685-11	33k	1-244-709-11	330k	1-244-733-11	3.3M	1-244-757-11
3.6	1-244-614-11	36	1-244-638-11	360	1-244-662-11	3.6k	1-244-686-11	36k	1-244-710-11	360k	1-244-734-11	3.6M	1-244-758-11
3.9	1-244-615-11	39	1-244-639-11	390	1-244-663-11	3.9k	1-244-687-11	39k	1-244-711-11	390k	1-244-735-11	3.9M	1-244-759-11
4.3	1-244-616-11	43	1-244-640-11	430	1-244-664-11	4.3k	1-244-688-11	43k	1-244-712-11	430k	1-244-736-11	4.3M	1-244-760-11
4.7	1-244-617-11	47	1-244-641-11	470	1-244-665-11	4.7k	1-244-689-11	47k	1-244-713-11	470k	1-244-737-11	4.7M	1-244-761-11
5.1	1-244-618-11	51	1-244-642-11	510	1-244-666-11	5.1k	1-244-690-11	51k	1-244-714-11	510k	1-244-738-11	5.1M	1-244-762-11
5.6	1-244-619-11	56	1-244-643-11	560	1-244-667-11	5.6k	1-244-691-11	56k	1-244-715-11	560k	1-244-739-11		
6.2	1-244-620-11	62	1-244-644-11	620	1-244-668-11	6.2k	1-244-692-11	62k	1-244-716-11	620k	1-244-740-11		
6.8	1-244-621-11	68	1-244-645-11	680	1-244-669-11	6.8k	1-244-693-11	68k	1-244-717-11	680k	1-244-741-11		
7.5	1-244-622-11	75	1-244-646-11	750	1-244-670-11	7.5k	1-244-694-11	75k	1-244-718-11	750k	1-244-742-11		
8.2	1-244-623-11	82	1-244-647-11	820	1-244-671-11	8.2k	1-244-695-11	82k	1-244-719-11	820k	1-244-743-11		
9.1	1-244-624-11	91	1-244-648-11	910	1-244-672-11	9.1k	1-244-696-11	91k	1-244-720-11	910k	1-244-744-11		

HARDWARE NOMENCLATURE

Screw: P 3 x 10

- *L: Length in mm*
- *D: Diameter in mm*
- *Type of head*
- *Indicated slotted-head only. Unless otherwise indicated, it means cross-recessed head (Phillips type).*

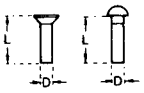

Nut, Washer, Retaining ring: N 3

- *Diameter of usable screw or shaft*
- *Reference designation*

Reference Designation	Shape	Description	Remarks
		SCREWS	
P		pan-head screw	binding-head (B) screw for replacement
PWH		pan-head screw with washer face	binding-head (B) screw and flat washer for replacement
PS PSP		pan-head screw with spring washer	binding-head (B) screw and spring washer for replacement
PSW PSPW		pan-head screw with spring and flat washers	binding-head (B) screw and spring and flat washers for replacement
R		round-head screw	binding-head (B) screw for replacement
K		flat-countersunk-head screw	
RK		oval-countersunk-head screw	
B		binding-head screw	
T		truss-head screw	binding-head (B) screw for replacement
F		flat-fillister-head screw	
RF		fillister-head screw	
BV		braizer-head screw	

Reference Designation	Shape	Description	Remarks
		SELF-TAPPING SCREWS	
TA		self-tapping screw	ex: TA, P 3 x 10
PTP		pan-head self-tapping screw	binding-head self-tapping (TA, B) screw for replacement
PTPWH		pan-head self-tapping screw with washer face	binding-head self tapping (TA, B) screw and flat washer for replacement
PTTWH		pan-head thread-rolling screw with washer face	binding-head (B) screw and flat washer for replacement
		SET SCREWS	
SC		set screw	
SC		hexagon-socket set screw	ex: SC 2.6 x 4, hexagon socket
		NUT	
N		nut	
		WASHERS	
W		flat washer	
SW		spring washer	
LW		internal-tooth lock washer	ex: LW3, internal
LW		external-tooth lock washer	ex: LW3, external
		RETAINING RINGS	
E		retaining ring	
G		grip-type retaining ring	

Sony Corporation
© 1978

9-958-514-01

7810675-1
Printed in Japan

FM STEREO/FM-AM RECEIVER

STR-V5

CORRECTION

Sept., 1978

Please add the following information to the STR-V5 service manual (Part No. 9-958-514-01).

: Added portion (On page 12)

Discriminator Adjustment

• Secondary-side Adjustment

Setup:

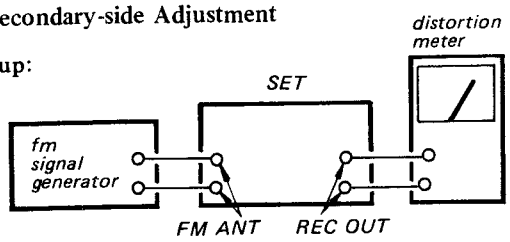

FM Signal Generator Setting:

Carrier frequency:	98 MHz
Output level:	1 mV (60 dB)
Modulation:	400 Hz, 75 kHz deviation (100%)

Procedure:

1. Tune the set to 98 MHz.
2. Adjust the secondary-side core (black) of IFT201 for a minimum reading on the distortion meter.

• Primary-side Adjustment

Procedure:

1. Detune the set.
2. Adjust the primary-side core (blue) of IFT201 for the center position on the TUNING meter.

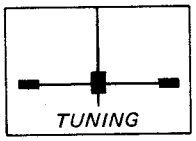

Note: Repeat the secondary-side and primary-side adjustments several times.

SONY®
SERVICE MANUAL

Sony Corporation
© 1978

9-958-514-91

7810675-1
Printed in Japan