STR-V4L

AEP Model
UK Model

FM STEREO/FM-AM RECEIVER

SPECIFICATIONS

GENERAL

Power Requirements:	120 V, 220 V or 240 V ac adjustable, 50/60 Hz
Power Consumption:	290 W (AEP model) 390 W (UK model)
Dimensions:	Approx. 480 (w) x 145 (h) x 400 (d) mm 18 ¾ (w) x 5 ¾ (h) x 15 ¾ (d) inches including projecting parts and controls
Weight:	Approx. 13.3 kg, 29 lb 5 oz (net) Approx. 15.7 kg, 34 lb 9 oz (in shipping carton)

FM SECTION

Frequency Range:	87.5 – 108 MHz
Antenna:	300 Ω balanced 75 Ω unbalanced
Intermediate Frequency:	10.7 MHz
Sensitivity at 46dB Quieting: (at 40kHz deviation)	4.5 μV, 18.3 dBf (MONO) 50 μV, 39.1 dBf (STEREO)
Usable Sensitivity: (at 40kHz deviation)	2 μV, 11.2 dBf; IHF 1.6 μV (4 dB), S/N=26 dB
Limiting Threshold:	1.4 μV (2.8 dB)
S/N Ratio: (at 40kHz deviation)	67 dB (MONO) 63 dB (STEREO)
Harmonic Distortion: (at 40kHz deviation)	At 100 Hz 0.15 % (MONO) 0.25 % (STEREO) At 1 kHz 0.15 % (MONO) 0.25 % (STEREO) At 10 kHz 0.2 % (MONO) 0.5 % (STEREO)
IM Distortion: (at 40kHz deviation)	0.15 % (MONO) 0.25 % (STEREO)
Separation:	40 dB at 100 Hz 45 dB at 1 kHz 32 dB at 10 kHz
Frequency Response:	40 – 12,500 Hz $^{+0.5}_{-1.0}$ dB 30 – 15,000 Hz $^{+1.0}_{-2.0}$ dB

– Continued on page 2 –

SAFETY-RELATED COMPONENT WARNING!!

COMPONENTS IDENTIFIED BY SHADING AND MARK ⚠ ON THE SCHEMATIC DIAGRAMS, EXPLODED VIEWS AND IN THE PARTS LIST ARE CRITICAL TO SAFE OPERATION. REPLACE THESE COMPONENTS WITH SONY PARTS WHOSE PART NUMBERS APPEAR AS SHOWN IN THIS MANUAL OR IN SUPPLEMENTS PUBLISHED BY SONY.

SONY®
SERVICE MANUAL

Selectivity:	45 dB (300 kHz) 70 dB (400 kHz)
Capture Ratio:	1.0 dB
AM Suppression Ratio:	55 dB
Image Response Ratio:	45 dB
IF Response Ratio:	95 dB
Spurious Response Ratio:	75 dB
RF Intermodulation:	60 dB
Muting Threshold:	Approx. 5 μV
Sub-carrier Product Ratio:	40 dB

AM (MW/LW) SECTION

Frequency Range:	MW: 530 – 1,605 kHz LW: 150 – 350 kHz
Antenna:	Built-in ferrite-rod antenna External antenna terminal
Intermediate Frequency:	468 kHz
Usable Sensitivity:	MW: 200 μV/m (46 dB/m), built-in antenna (1,000 kHz) 100 μV (40 dB), external antenna (1,000 kHz) LW: 450 μV/m (52.8 dB/m), built-in antenna (250 kHz) 100 μV (40 dB) external antenna (250 kHz)
S/N Ratio:	50 dB (50 mV/m)
Harmonic Distortion:	0.5 % (50 mV/m, 400 Hz)
Selectivity:	35 dB (10 kHz)
Image Response Ratio:	MW: 40 dB (1,000 kHz) LW: 75 dB (250 kHz)

AUDIO AMPLIFIER SECTION

Continuous RMS Power Output: Less than 0.1 % THD, both channels driven simultaneously

At 20 – 20,000 Hz
- 50 W + 50 W (8 Ω)
- 50 W + 50 W (4 Ω)

At 1 kHz
- 53 W + 53 W (8 Ω)
- 50 W + 50 W (4 Ω)

According to DIN 45500
- 50 W + 50 W (8 Ω)

Dynamic Power Output:	IHF constant power supply method 150 W (8 Ω)
Power Bandwidth:	10 – 35,000 Hz, IHF
Damping Factor:	40 at 1 kHz (8 Ω)
Harmonic Distortion:	Less than 0.1 % at rated output Less than 0.05 % at 1 W output
IM Distortion: (60Hz : 7kHz = 4 : 1)	Less than 0.1 % at rated output Less than 0.05 % at 1W output
Residual Noise:	Less than 0.3 mV (–70.6 dB) (A-network)
Frequency Response:	PHONO: RIAA equalization curve ± 0.8 dB TAPE1, 2 REC/PB): 5 – 50,000 Hz $^{+0.5\ dB}_{-2\ dB}$

Inputs:

	Sensitivity	Impedance	S/N	Weighting network
PHONO	2.5 mV (–50 dB)	50 kΩ	75 dB	A
TAPE 1, 2 REC/PB	150 mV (–14.5 dB)	50 kΩ	100 dB	A

Measured with rated output power into 8 Ω loads (both channels driven simultaneously) at 1 kHz.

Outputs:
(with rated input, FM 30 % modulation, speaker rated output)

	Voltage	Impedance
REC OUT 1, 2	150 mV (–14.5 dB)	4.7 kΩ
REC/PB	40 mV (–28 dB)	82 kΩ

Headphones:	Accepts 8 – 10 Ω impedance headphones
Speaker:	4 – 16 Ω speakers are suitable.
Tone Controls:	BASS: ± 10 dB at 100 Hz TREBLE: ± 10 dB at 10 kHz
Loudness Control: (att. 30 dB)	+10 dB at 50 Hz +3 dB at 10 kHz
High Filter:	6 dB/oct. above 6 kHz

0dB = 0.775V

MODEL IDENTIFICATION

Specification Label

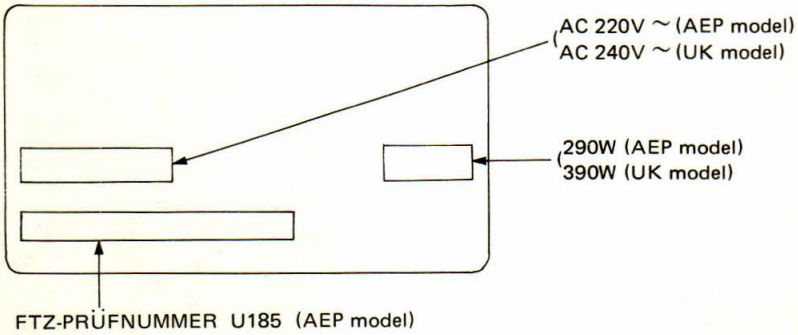

SECTION 1
BLOCK DIAGRAM

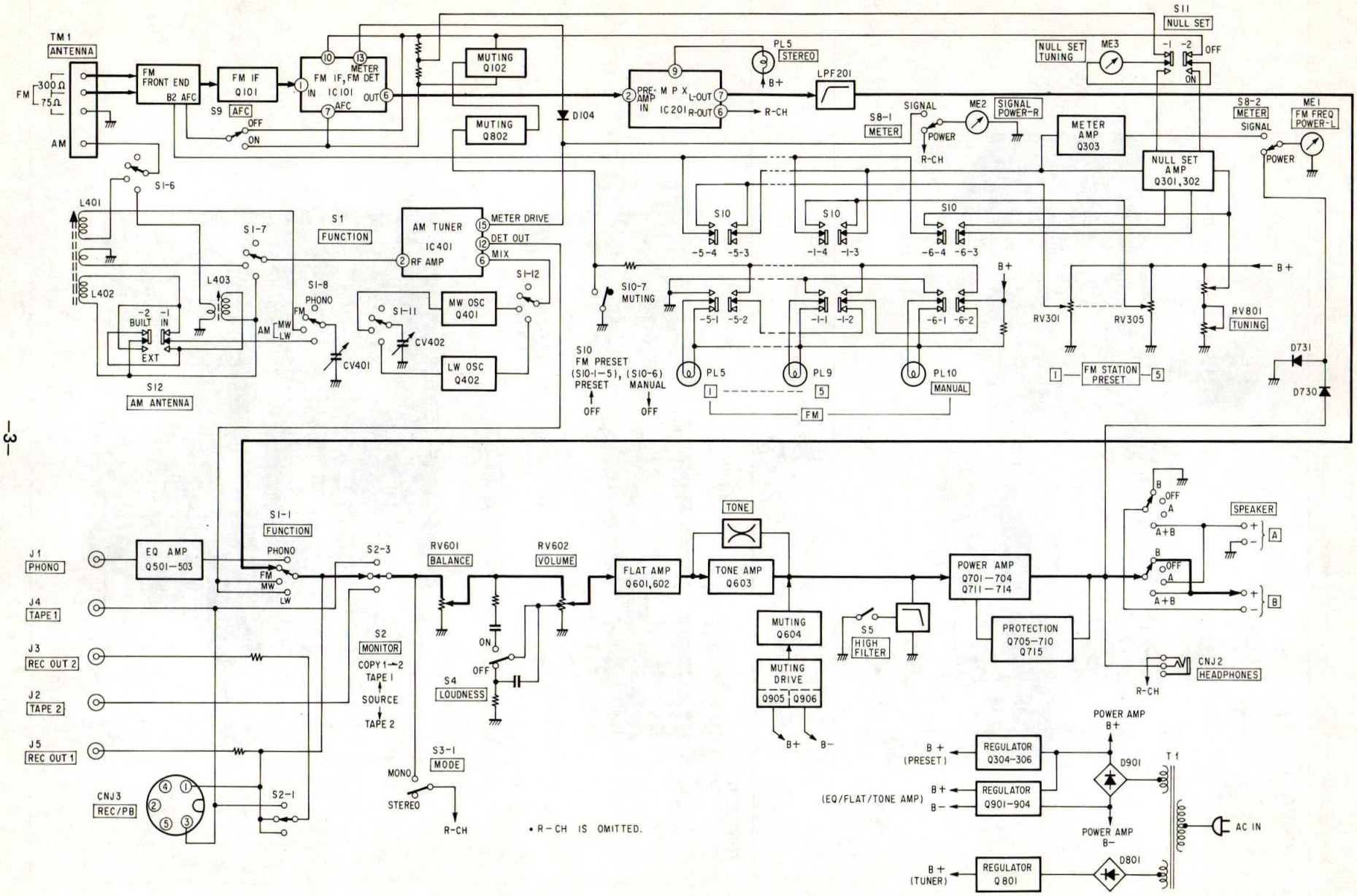

STR-V4L

SECTION 2
DISASSEMBLY AND REPLACEMENT

Note: • Follow the disassembly procedure in the numerical order given.

CASE REMOVAL

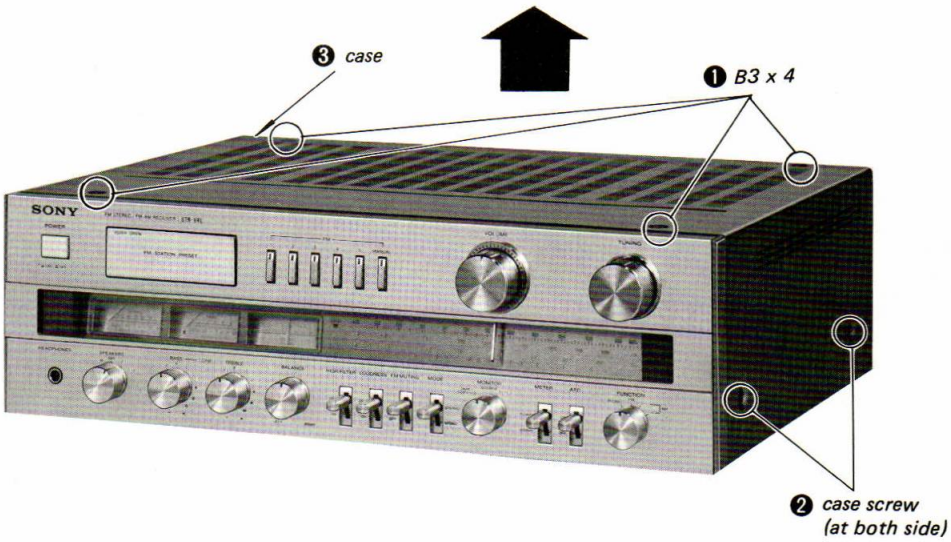

PANEL REMOVAL

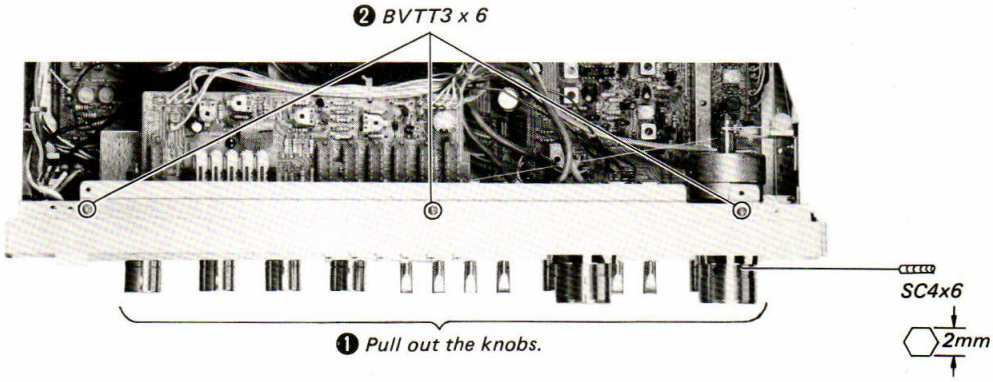

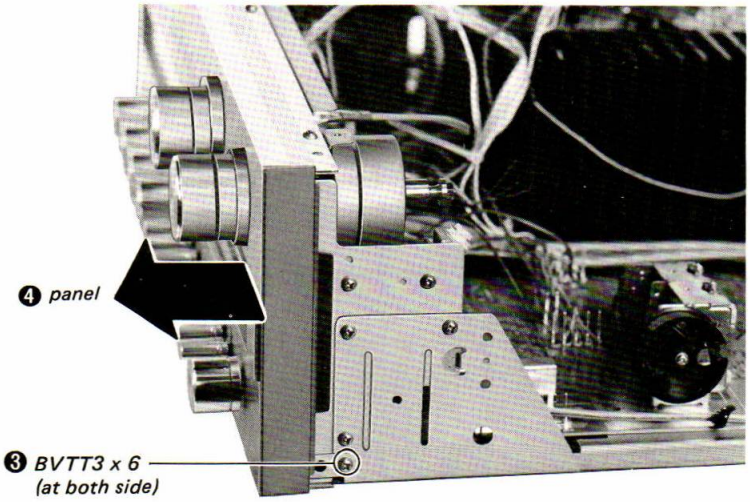

STR-V4L STR-V4L

BOTTOM PLATE REMOVAL

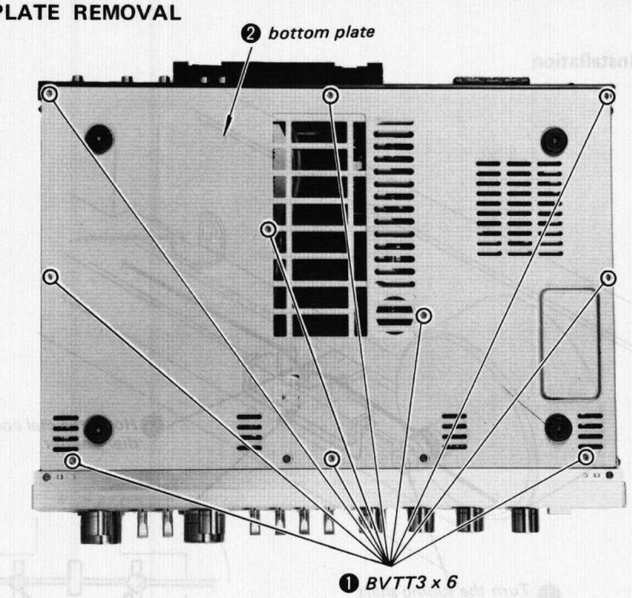

CIRCUIT BOARDS LOCATION

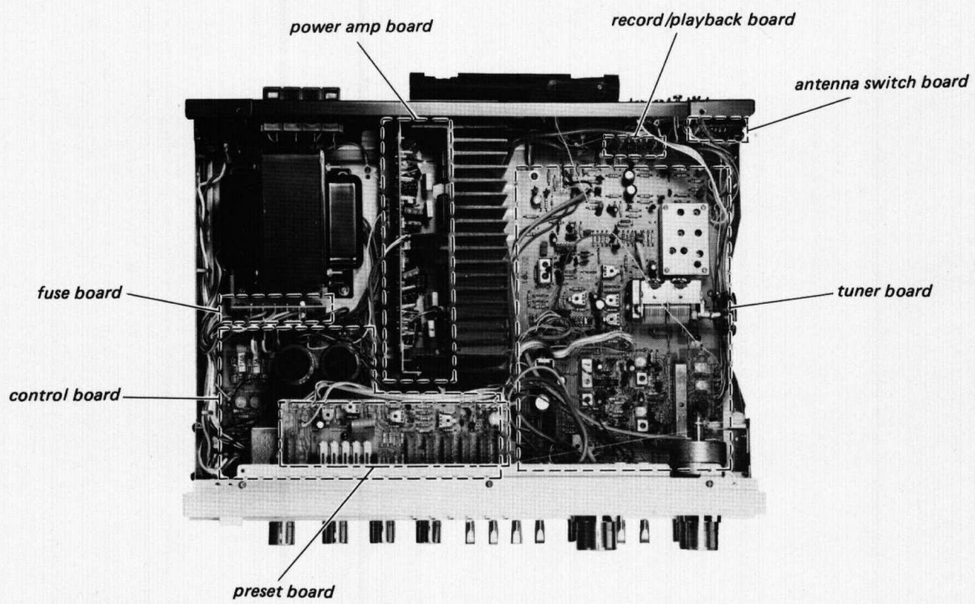

1/4 WATT CARBON RESISTORS Ⓐ

Note: Circled letter Ⓐ is applicable to European models only.

Ω	Part No.	Ω	Part No.	Ω	Part No.	Ω	Part No.	Ω	Part No.	Ω	Part No.	Ω	Part No.
1.0	1-246-401-00	10	1-246-425-00	100	1-246-449-00	1.0k	1-246-473-00	10k	1-246-497-00	100k	1-246-521-00	1.0M	1-246-545-00
1.1	1-246-402-00	11	1-246-426-00	110	1-246-450-00	1.1k	1-246-474-00	11k	1-246-498-00	110k	1-246-522-00	1.1M	1-210-814-00
1.2	1-246-403-00	12	1-246-427-00	120	1-246-451-00	1.2k	1-246-475-00	12k	1-246-499-00	120k	1-246-523-00	1.2M	1-210-815-00
1.3	1-246-404-00	13	1-246-428-00	130	1-246-452-00	1.3k	1-246-576-00	13k	1-246-500-00	130k	1-246-524-00	1.3M	1-210-816-00
1.5	1-246-405-00	15	1-246-429-00	150	1-246-453-00	1.5k	1-246-577-00	15k	1-246-501-00	150k	1-246-525-00	1.5M	1-210-817-00
1.6	1-246-406-00	16	1-246-430-00	160	1-246-454-00	1.6k	1-246-578-00	16k	1-246-502-00	160k	1-246-526-00	1.6M	1-210-818-00
1.8	1-246-407-00	18	1-246-431-00	180	1-246-455-00	1.8k	1-246-579-00	18k	1-246-503-00	180k	1-246-527-00	1.8M	1-210-819-00
2.0	1-246-408-00	20	1-246-432-00	200	1-246-456-00	2.0k	1-246-580-00	20k	1-246-504-00	200k	1-246-528-00	2.0M	1-210-820-00
2.2	1-246-409-00	22	1-246-433-00	220	1-246-457-00	2.2k	1-246-581-00	22k	1-246-505-00	220k	1-246-529-00	2.2M	1-210-821-00
2.4	1-246-410-00	24	1-246-434-00	240	1-246-458-00	2.4k	1-246-582-00	24k	1-246-506-00	240k	1-246-530-00	2.4M	1-244-754-00
2.7	1-246-411-00	27	1-246-435-00	270	1-246-459-00	2.7k	1-246-583-00	27k	1-246-507-00	270k	1-246-531-00	2.7M	1-244-755-00
3.0	1-246-412-00	30	1-246-436-00	300	1-246-460-00	3.0k	1-246-584-00	30k	1-246-508-00	300k	1-246-532-00	3.0M	1-244-756-00
3.3	1-246-413-00	33	1-246-437-00	330	1-246-461-00	3.3k	1-246-585-00	33k	1-246-509-00	330k	1-246-533-00	3.3M	1-244-757-00
3.6	1-246-414-00	36	1-246-438-00	360	1-246-462-00	3.6k	1-246-586-00	36k	1-246-510-00	360k	1-246-534-00	3.6M	1-244-758-00
3.9	1-246-415-00	39	1-246-439-00	390	1-246-463-00	3.9k	1-246-587-00	39k	1-246-511-00	390k	1-246-535-00	3.9M	1-244-759-00
4.3	1-246-416-00	43	1-246-440-00	430	1-246-464-00	4.3k	1-246-488-00	43k	1-246-512-00	430k	1-246-536-00	4.3M	1-244-760-00
4.7	1-246-417-00	47	1-246-441-00	470	1-246-465-00	4.7k	1-246-489-00	47k	1-246-513-00	470k	1-246-537-00	4.7M	1-244-761-00
5.1	1-246-418-00	51	1-246-442-00	510	1-246-466-00	5.1k	1-246-490-00	51k	1-246-514-00	510k	1-246-538-00	5.1M	1-244-762-00
5.6	1-246-419-00	56	1-246-443-00	560	1-246-467-00	5.6k	1-246-491-00	56k	1-246-515-00	560k	1-246-539-00		
6.2	1-246-420-00	62	1-246-444-00	620	1-246-468-00	6.2k	1-246-492-00	62k	1-246-516-00	620k	1-246-540-00		
6.8	1-246-421-00	68	1-246-445-00	680	1-246-469-00	6.8k	1-246-493-00	68k	1-246-517-00	680k	1-246-541-00		
7.5	1-246-422-00	75	1-246-446-00	750	1-246-470-00	7.5k	1-246-494-00	75k	1-246-518-00	750k	1-246-542-00		
8.2	1-246-423-00	82	1-246-447-00	820	1-246-471-00	8.2k	1-246-495-00	82k	1-246-519-00	820k	1-246-543-00		
9.1	1-246-424-00	91	1-246-448-00	910	1-246-472-00	9.1k	1-246-496-00	91k	1-246-520-00	910k	1-246-544-00		

PRESET BOARD REMOVAL

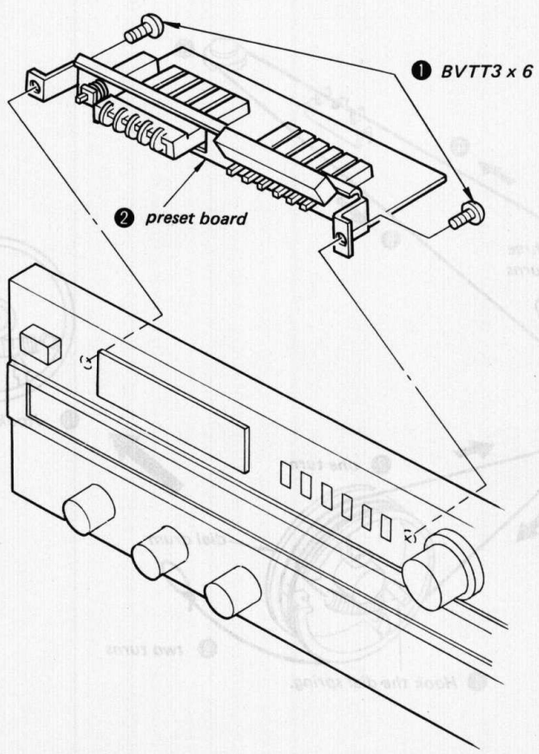

DIAL CORD STRINGING

1. Dial Cord Preparation

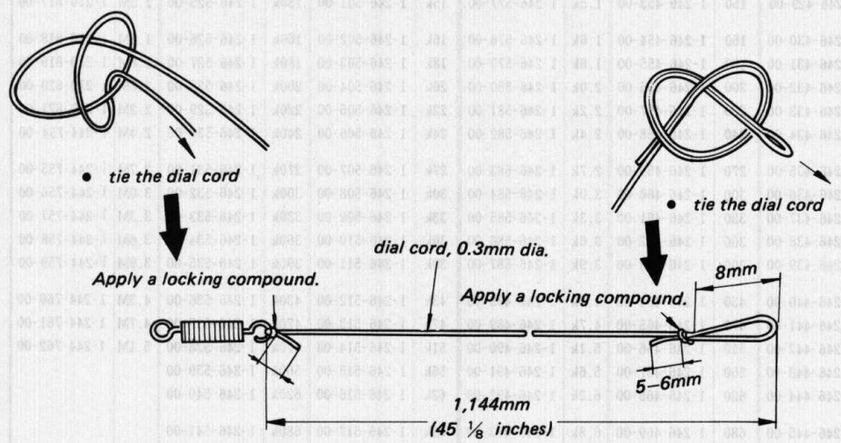

2. Dial Cord Stringing

- *Turn the dial drum fully counterclockwise.*

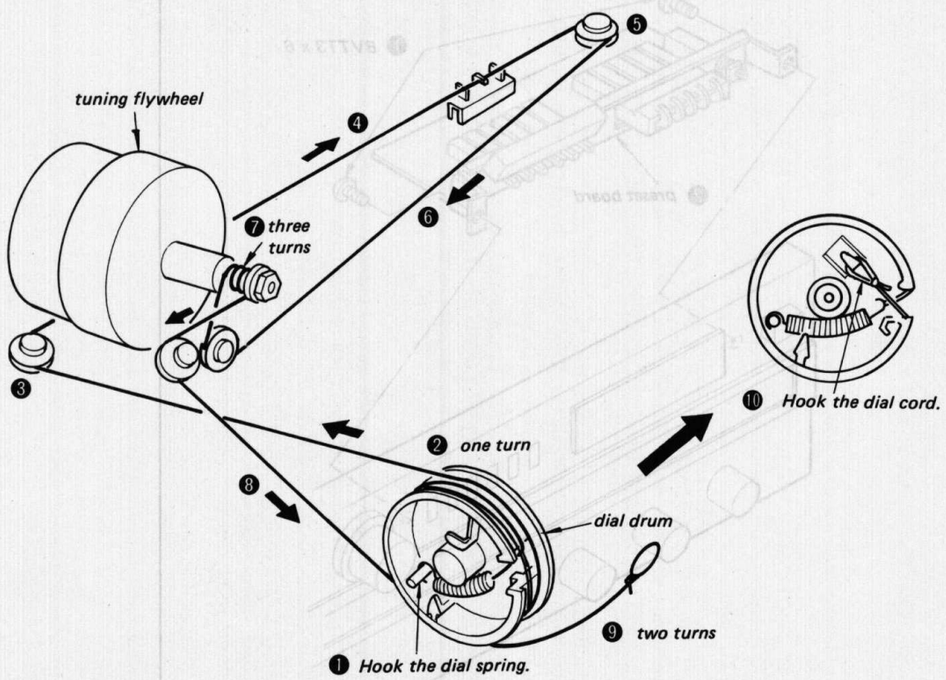

3. Dial Pointer Installation

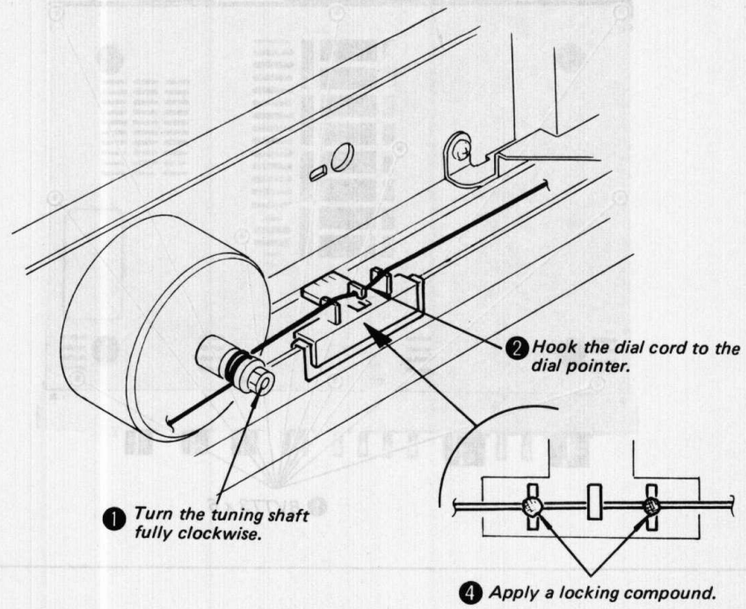

❸ *Set the dial pointer at "108.4 MHz.*

SECTION 3
ELECTRICAL ADJUSTMENTS

Bias Adjustment

Setup:

1. Detune the set.
2. Perform this adjustment in one minute or more after turning the power switch on.

Procedure:

1. Adjust RT701 (L-CH) and RT751 (R-CH) for a 50 mV reading on the VTVM.

Adjustment Location: *– power amp board –*

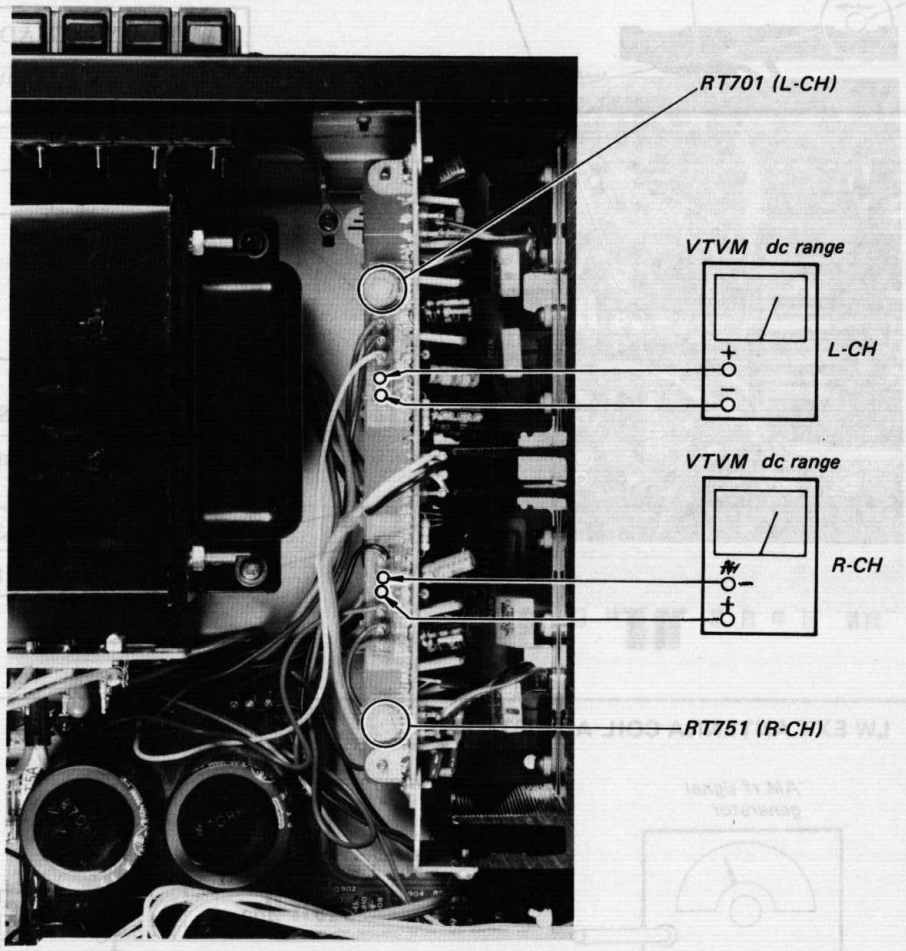

LW SECTION

Setup: FUNCTION switch: LW
AM ANTENNA switch: BUILT-IN

Note: Repeat the LW and MW Tracking Adjustment alternately.

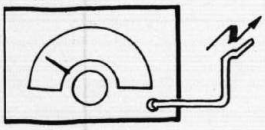

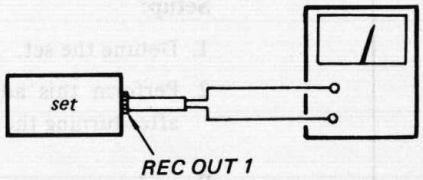

- Repeat the procedures in each adjustment several times, and the frequency coverage and tracking adjustments should be finally done by the trimmer capacitors.

IFT401 and CFT401 are adjusted in the factory, so no adjustment of AM IF is necessary.

IFT401	CFT401

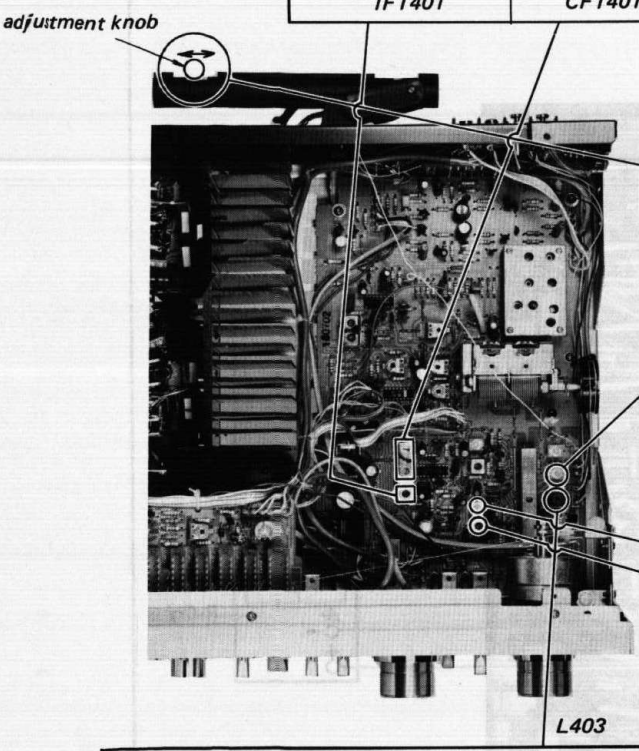

LW TRACKING ADJUSTMENT	
Adjust for a maximum reading on VOM.	
L402 (LW)	170 kHz
CT402	310 kHz

LW FREQUENCY COVERAGE ADJUSTMENT	
Adjust for a maximum reading on VOM.	
CT404	365 kHz
L408	145 kHz

LW EXT ANTENNA COIL ADJUSTMENT

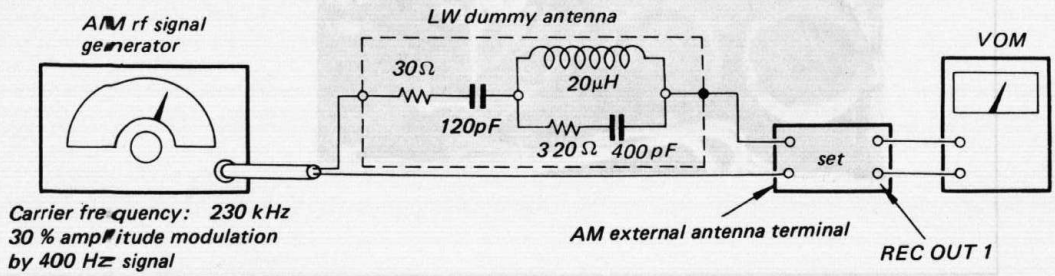

1. Set the AM ANTENNA switch to EXT position.
2. Tune the set to 230 kHz and adjust L403 for a maximum reading on VOM.

MW SECTION

Setup: FUNCTION switch MW
AM ANTENNA switch: BUILT-IN

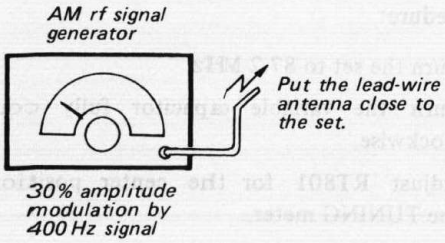

Note: Repeat the LW and MW Tracking Adjustment alternately.

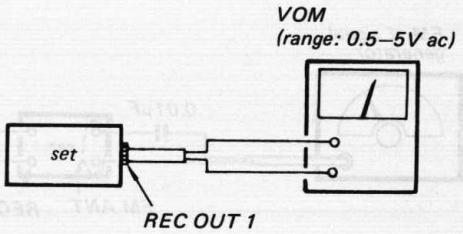

- Repeat the procedures in each adjustment several times, and the frequency coverage and tracking adjustments should be finally done by the trimmer capacitors.

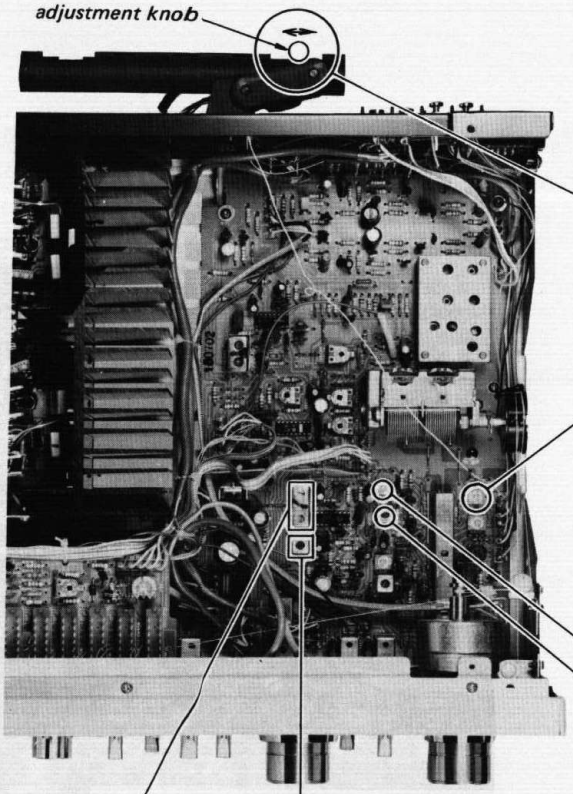

MW TRACKING ADJUSTMENT	
Adjust for a maximum reading on VOM.	
L401 (MW)	600 kHz
CT401	1,350 kHz

MW FREQUENCY COVERAGE ADJUSTMENT	
Adjust for a maximum reading on VOM.	
CT403	1,680 kHz
L407	520 kHz

CFT401	IFT401
IFT401 and CFT401 are adjusted in the factory, so no adjustment of AM IF is necessary.	

FM SECTION

High Frequency and Low Frequency Adjustment

Setup: PRESET switch: MANUAL

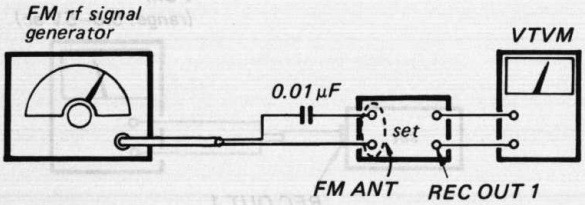

FM Signal Generator Setting:

Carrier frequency: 108.4 MHz, 87.2 MHz
Output level: 1 mV (60 dB)
Modulation: 400 Hz, 75 kHz deviation (100 %)

- **High Frequency Adjustment**

Procedure:

1. Tune the set to 108.4 MHz.
2. Turn the variable capacitor fully clockwise.
3. Adjust RT303 for the center position on the TUNING meter.

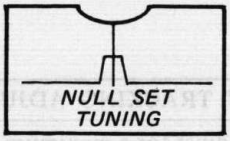

Adjustment Location: *– preset board –*

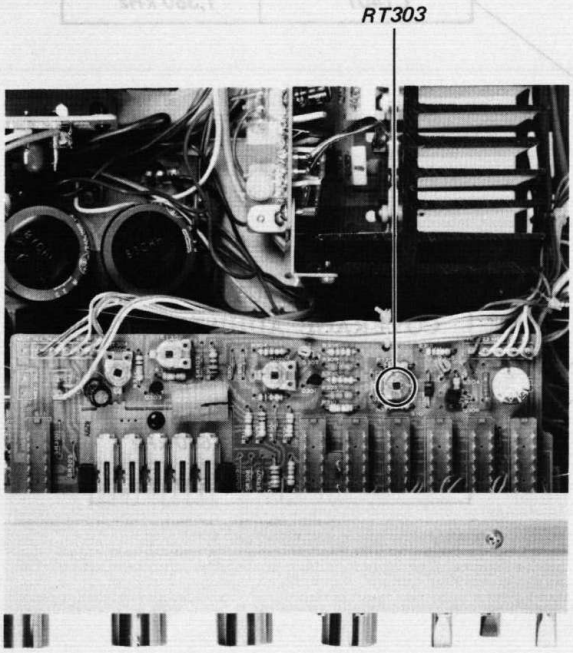

- **Low Frequency Adjustment**

Procedure:

1. Turn the set to 87.2 MHz.
2. Turn the variable capacitor fully counter-clockwise.
3. Adjust RT801 for the center position on the TUNING meter.

Note: Repeat the high frequency and low frequency adjustment several times.

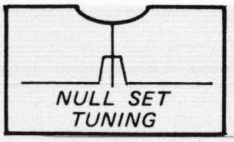

Adjustment Location: – tuner board –

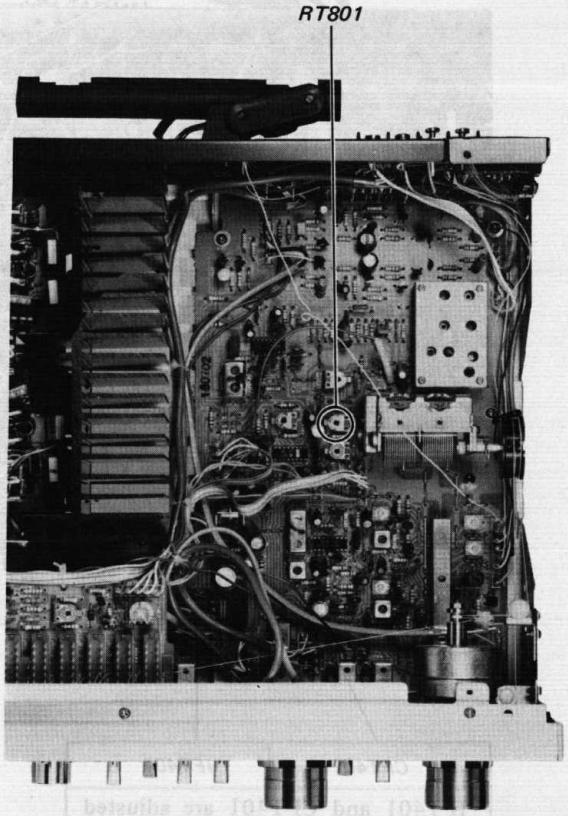

FM SECTION

Discriminator Adjustment

- **Secondary-side Adjustment**

Setup:

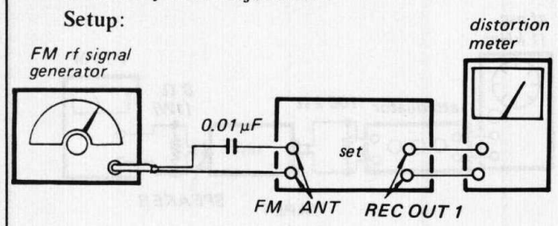

FM Signal Generator Setting:

Carrier frequency:	98 MHz
Output level:	1 mV (60 dB)
Modulation:	400 Hz, 75 kHz deviation (100 %)

Procedure:

1. Tune the set to 98 MHz.
2. Adjust the secondary-side core (black) of IFT101 for a minimum reading on the distortion meter.

- **Primary-side Adjustment**

Procedure:

1. Detune the set.
2. Adjust the primary-side core (blue) of IFT101 for the center position on the TUNING meter.

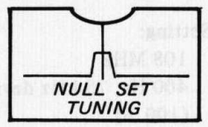

Note: Repeat the secondary-side and primary-side adjustments several times.

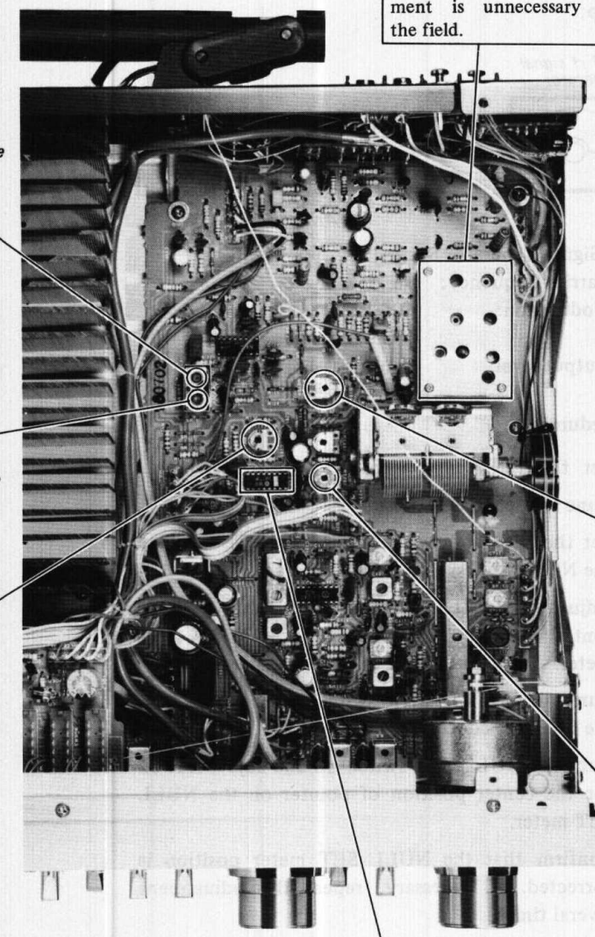

FRONT-END SECTION

The front-end section has been carefully adjusted at the factory, so the adjustment is unnecessary in the field.

Signal Meter Adjustment

Setup:

FUNCTION switch: FM

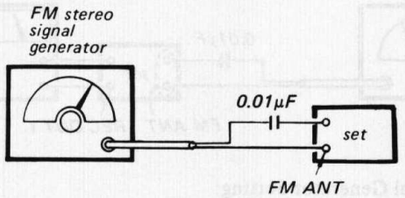

FM Signal Generator Setting:

Carrier frequency:	98 MHz
Modulation:	no modulation
Output level:	3.2 mV (70 dB)

Procedure:

Tune the set to 98 MHz and adjust RT101 for specified pointer position (See figure below.) on the SIGNAL meter.

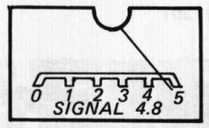

FM Stereo Separation Adjustment

Setup:

MODE switch: FM STEREO

Procedure:

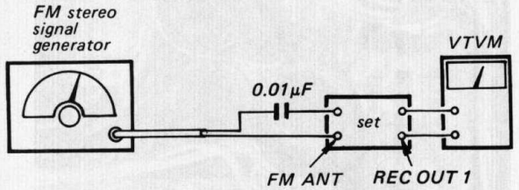

FM Signal Generator Setting:

Carrier frequency:	98 MHz
Output level:	1 mV (60 dB)
Mode:	Stereo
Modulation:	
Audio (400 Hz):	33.75 kHz deviation (45 %)
Pilot (19 kHz):	7.5 kHz deviation (10 %)

FM stereo signal generator output channel	VTVM connection	VTVM reading (dB)
L-CH	L-CH	Ⓐ
R-CH	L-CH	Ⓑ Adjust RT202 for Minimum reading.
R-CH	R-CH	Ⓒ
L-CH	R-CH	Ⓓ Adjust RT202 for minimum reading.

L-CH Stereo separation: Ⓐ – Ⓑ
R-CH Stereo separation: Ⓒ – Ⓓ

The difference between separations of both channels should be equal.

VCO Adjustment

A) With Frequency Counter

Setup:

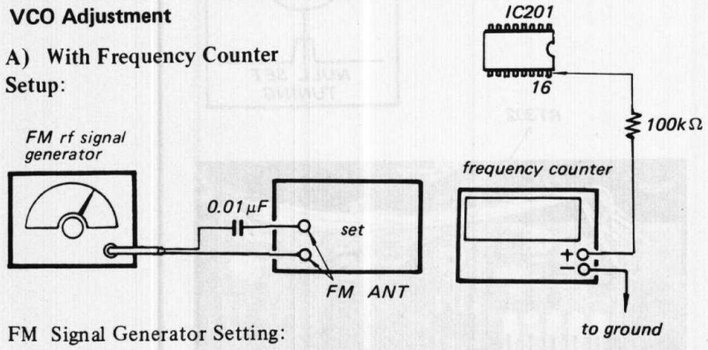

FM Signal Generator Setting:

Carrier frequency:	98 MHz
Modulation:	no modulation
Output level:	1 mV (60 dB)

Procedure:

1. Tune the set to 98 MHz.
2. Adjust RT201 for 76kHz ±100Hz on the counter.

B) Without Frequency Counter

1. Tune the set to FM stereo signals.
2. Turn RT201 clockwise or counterclockwise and secure RT201 at the center in lighting-up range of stereo lamp as shown below.

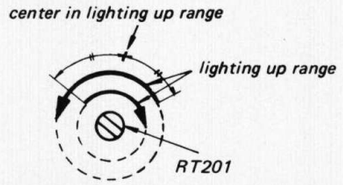

PRESET BOARD ADJUSTMENTS

1. Low Frequency Adjustment

Setup: PRESET switch [1] (S10-1): ON

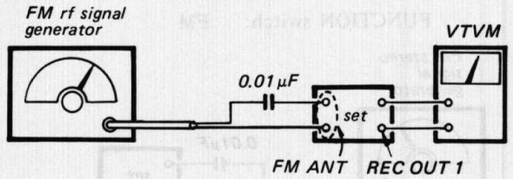

FM Signal Generator Setting:

Carrier frequency:	87.2 MHz
Modulation:	400 Hz, 75 kHz deviation (100 %)
Output level:	1 mV (60 dB)

Procedure:

1. Tune the set to 87.2 MHz.
2. Turn the PRESET control (RV301) fully counter-clockwise.
3. Adjust RT301 to receive the signal.

Adjustment Location:

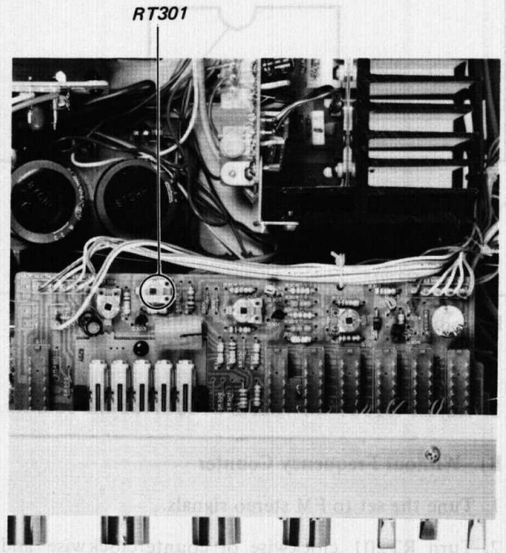

2. DC Balance Adjustment

Setup:

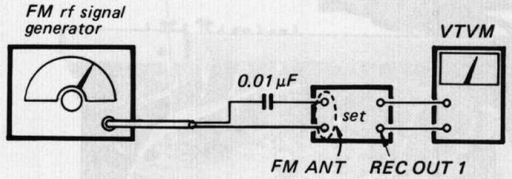

FM Signal Generator Setting:

Carrier frequency:	98 MHz
Modulation:	400 Hz, 75 kHz deviation (100 %)
Output level:	1 mV (60 dB)

Procedure:

1. Set the PRESET switch (S10-6) to MANUAL.
2. Tune the set to 98 MHz.
3. Set the PRESET switch to [1] (S10-1) and turn the NULL SET switch (S11) on.
4. Adjust the PRESET control (RV301) for the center position of pointer on the NULL SET meter.
5. Turn the NULL SET switch off and readjust the PRESET control.
6. Turn the NULL SET switch on and adjust RT302 for the center position of pointer on the NULL SET meter.
7. Confirm that the NULL SET meter position is corrected. If necessary, repeat this adjustment several times.

Adjustment Location:

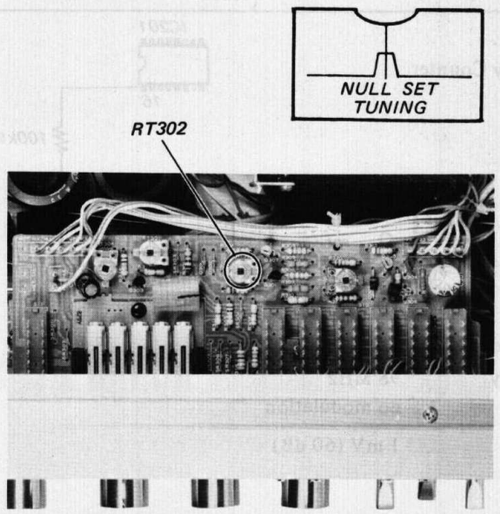

POWER AMP BOARD ADJUSTMENT

3. Meter Adjustment (FM FREQ)

Setup:

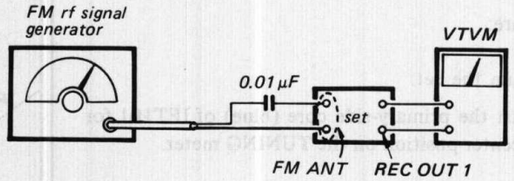

FM Signal Generator Setting:

Carrier frequency:	108 MHz
Modulation:	400 Hz, 75 kHz deviation (100 %)
Output level:	1 mV (60 dB)

Procedure:

1. Set the PRESET switch (S10-6) to MANUAL.
2. Tune the set to 108 MHz.
3. Set the PRESET switch to [1] (S10-1) and turn the NULL SET switch (S11) on.
4. Adjust the PRESET control for the center position of pointer on the NULL SET meter.
5. Turn the NULL SET switch off and readjust the PRESET control.
6. Turn the NULL SET switch on and adjust RT303 for specified pointer position on the FM FREQ meter.

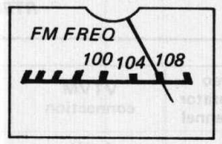

Adjustment Location:

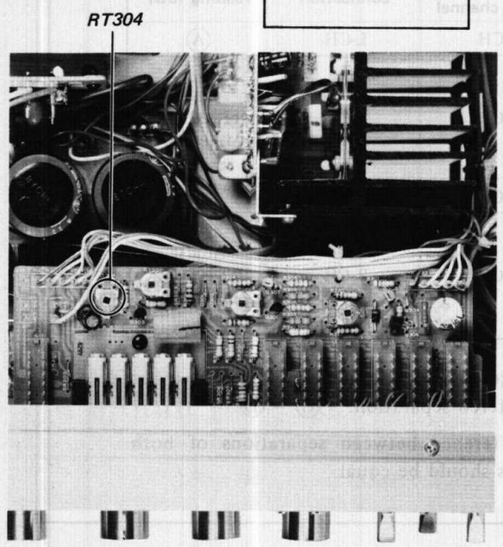

Power Meter Level Adjustment

Setup:

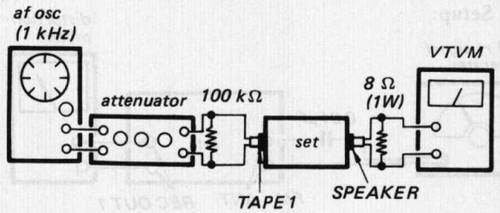

Procedure:

1. Turn the VOLUME control fully clockwise.
2. Adjust input level of the attenuator for 1W (2.83V) reading on the VTVM.
3. Adjust RT730 (L-CH) and RT780 (R-CH) for 1W reading on the POWER meter.

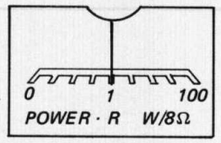

Adjustment Location: – power amp board –

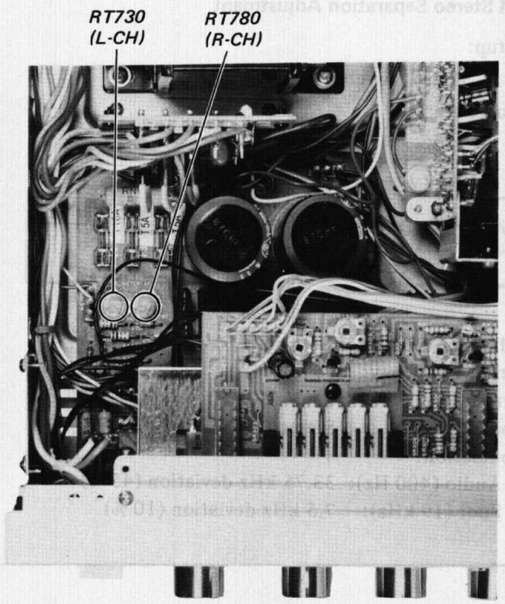

SECTION 4
DIAGRAMS

4-1. CONTROL BOARD MOUNTING DIAGRAM
– Conductor Side –

Note:
- [ ]← : indicates side identified with part number.
- Color code of sleeving over the end of the jacket.

- : B+ pattern
- : B– pattern

【CONTROL BOARD】—CONDUCTOR SIDE—

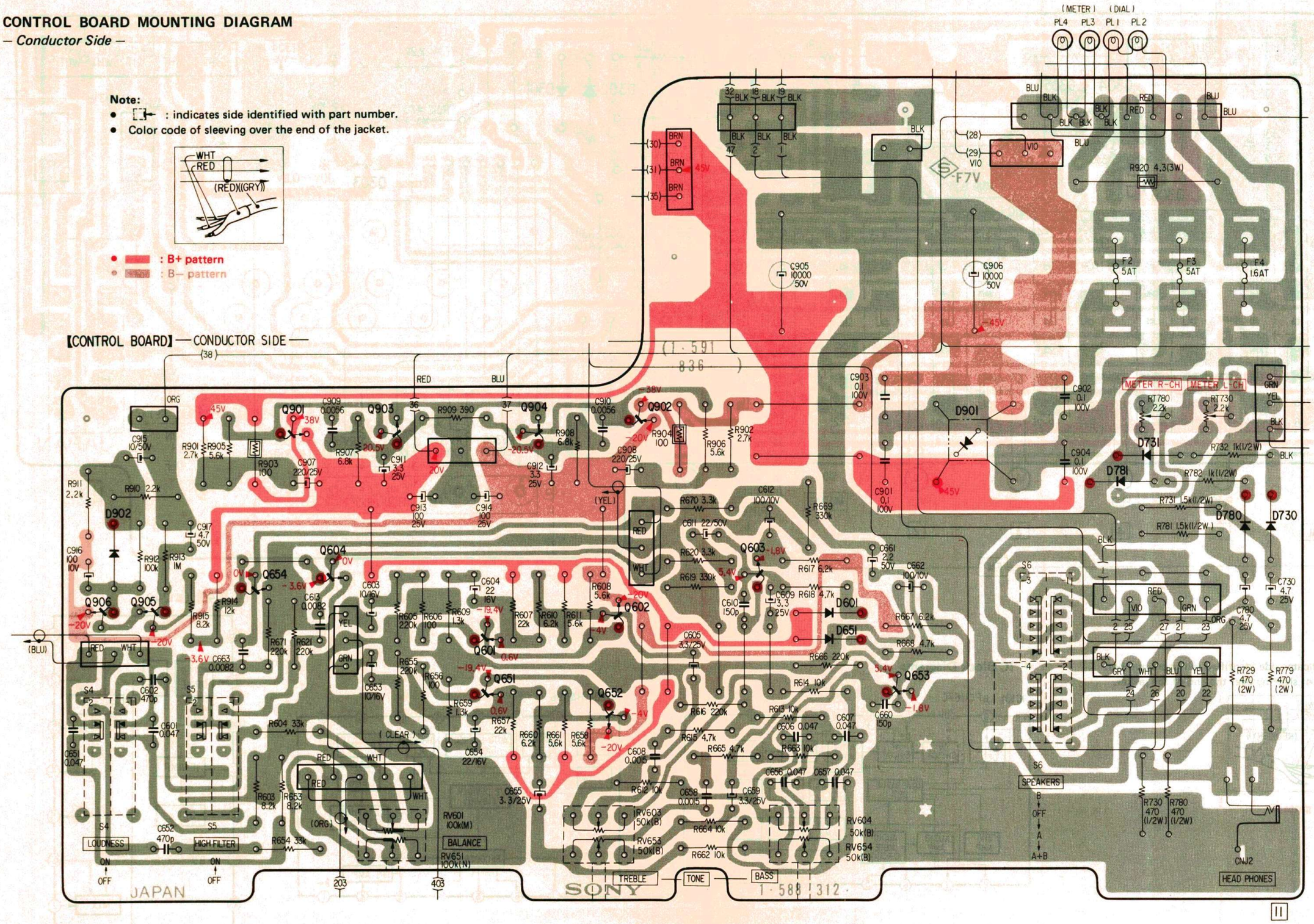

4-2. PRESET BOARD MOUNTING DIAGRAM
– Conductor Side –

【PRESET BOARD】

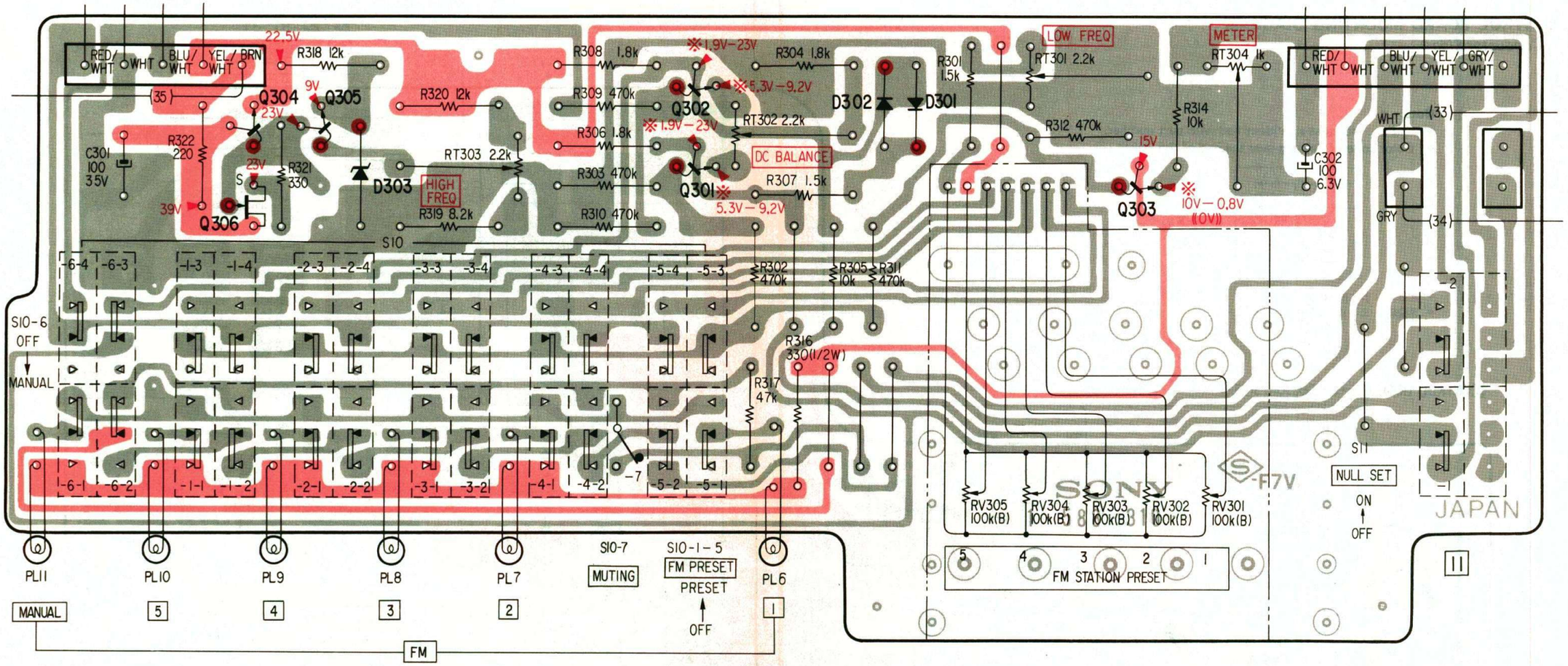

Note:
- [ ]← : indicates side identified with part number.
- Color code of sleeving over the end of the jacket.

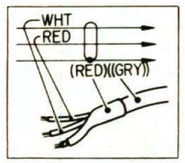

- ▬ : B+ pattern

- **IC Block Diagrams**

·IC101 μPC1167C

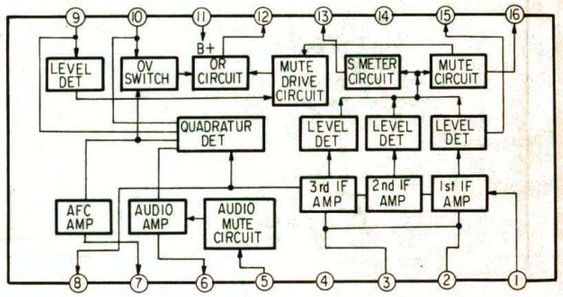

·IC201 HA1196

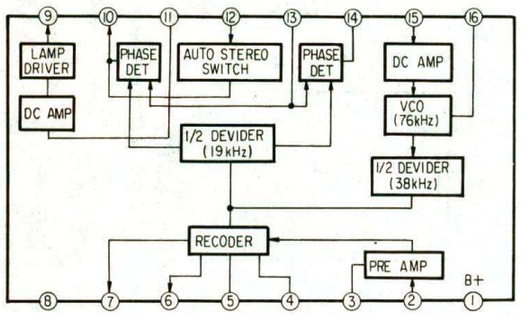

·IC401 LA1240

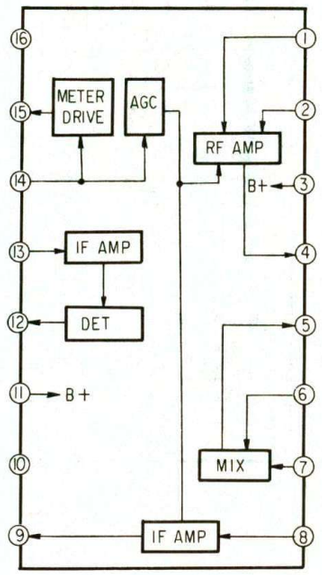

Replacement Semiconductor

For replacement, use semiconductors except in ( ).

Q101 : 2SC710 Q401, 402 : 2SC710-15 (2SC710)	Q102, 301–305, Q802, Q706, 707, 709, Q756, 757, 759 : 2SC1364 (2SC945) : 2SC1364	Q306 : 2SK30A
Q501, 551 : 2SA872-D (2SA872)	Q502, 552, Q601, 651 : 2SA678 (2SA844)	Q503, 553 : 2SC1362 (2SC458A)
Q602–604, Q652–654, Q903, 905, 906 : 2SC1364 (2SC1634)	Q701, 751 : 2SA884	Q702, 705, 708, Q710, 752, 755, Q758, 760, 904 : 2SA678 (2SA733)
Q703, 753 : 2SA896 (2SB646A) Q712, 762 : 2SB647A Q765 : 2SB647 Q902 : 2SA684 (2SB647)	Q704, 754 : 2SC1811 (2SD666A) Q711, 761 : 2SD667A Q715 : 2SD667 Q901 : 2SC1475 (2SD667)	
Q713, 763 : 2SD735	Q714, 764 : 2SB699	Q801 : 2SC1826
IC101 : μPC1167C IC201 : HA1196 IC401 : LA1240	D101–104, 201, D301, 302, 401, D402, 601, 651, D756–759, 706–709, D703–705, D753–755 : 1S1555 D730, 731, 780, D781, 902 : 10E2 (10E1) : 1T22AM (1T22)	D303 : EQB01-09 (EQA01-09S) D802 : EQB01-16 (EQA01-16R)
D701, 751 : MV12N	D702, 752 : SV04S (SV04ES)	D801 : SIRB10 D901 : S5VB20

4-3. MOUNTING DIAGRAM (1)

Note:
- : indicates side identified with part number.
- Color code of sleeving over the end of the jacket.
- : B+ pattern
- : B− pattern
- Signal Path:
  - : L-CH
  - : R-CH

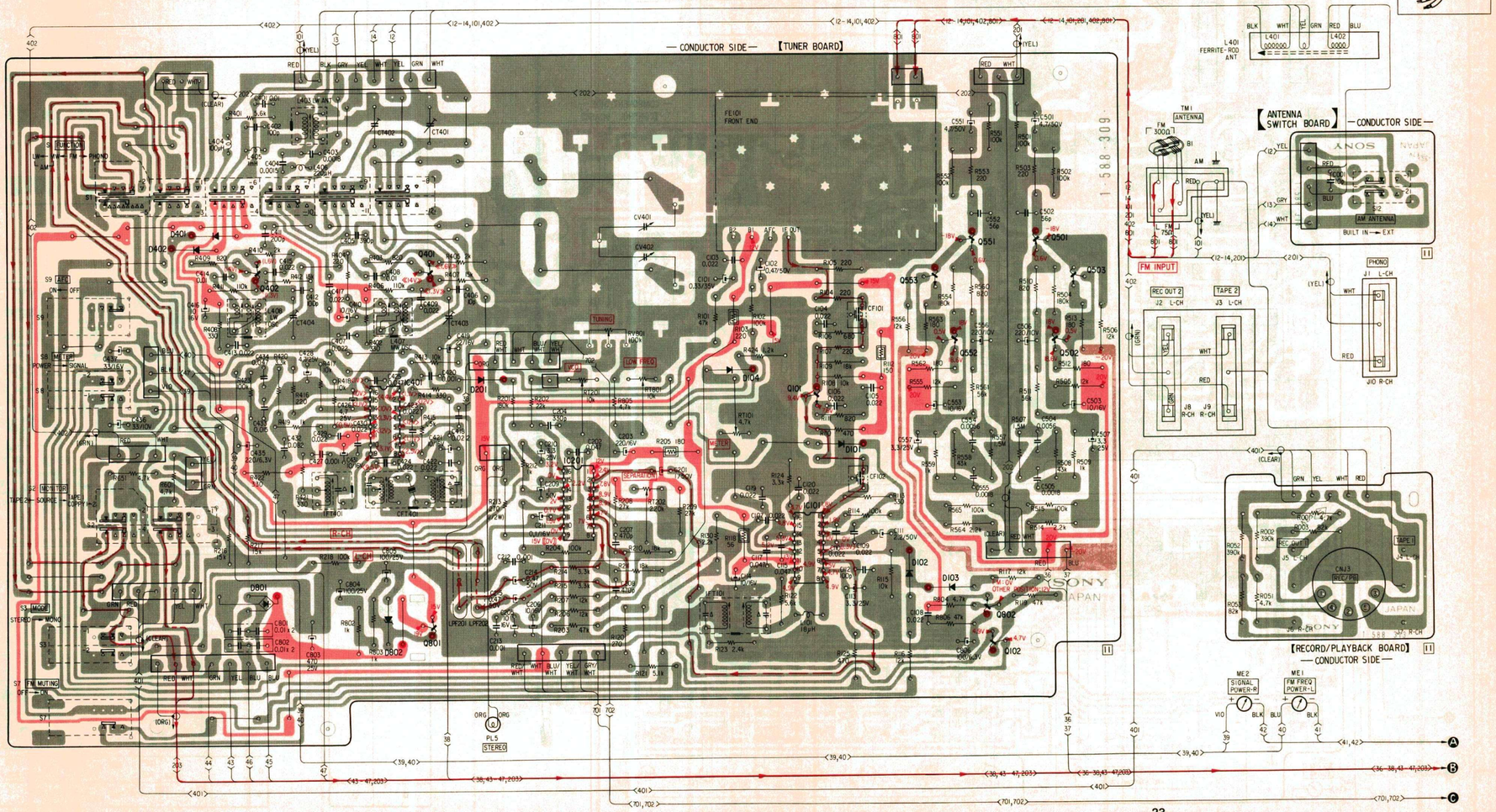

4-4. MOUNTING DIAGRAM (2)

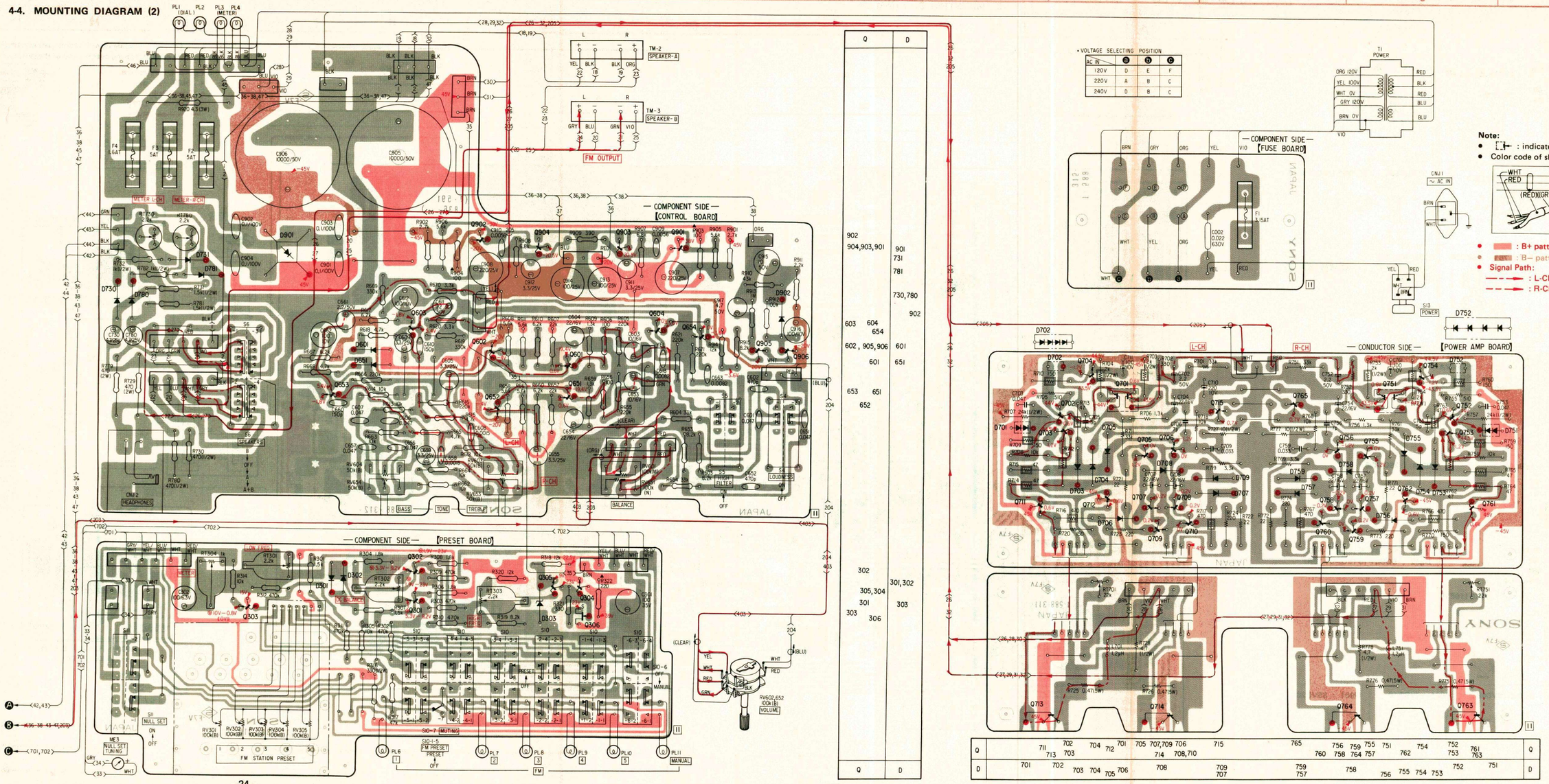

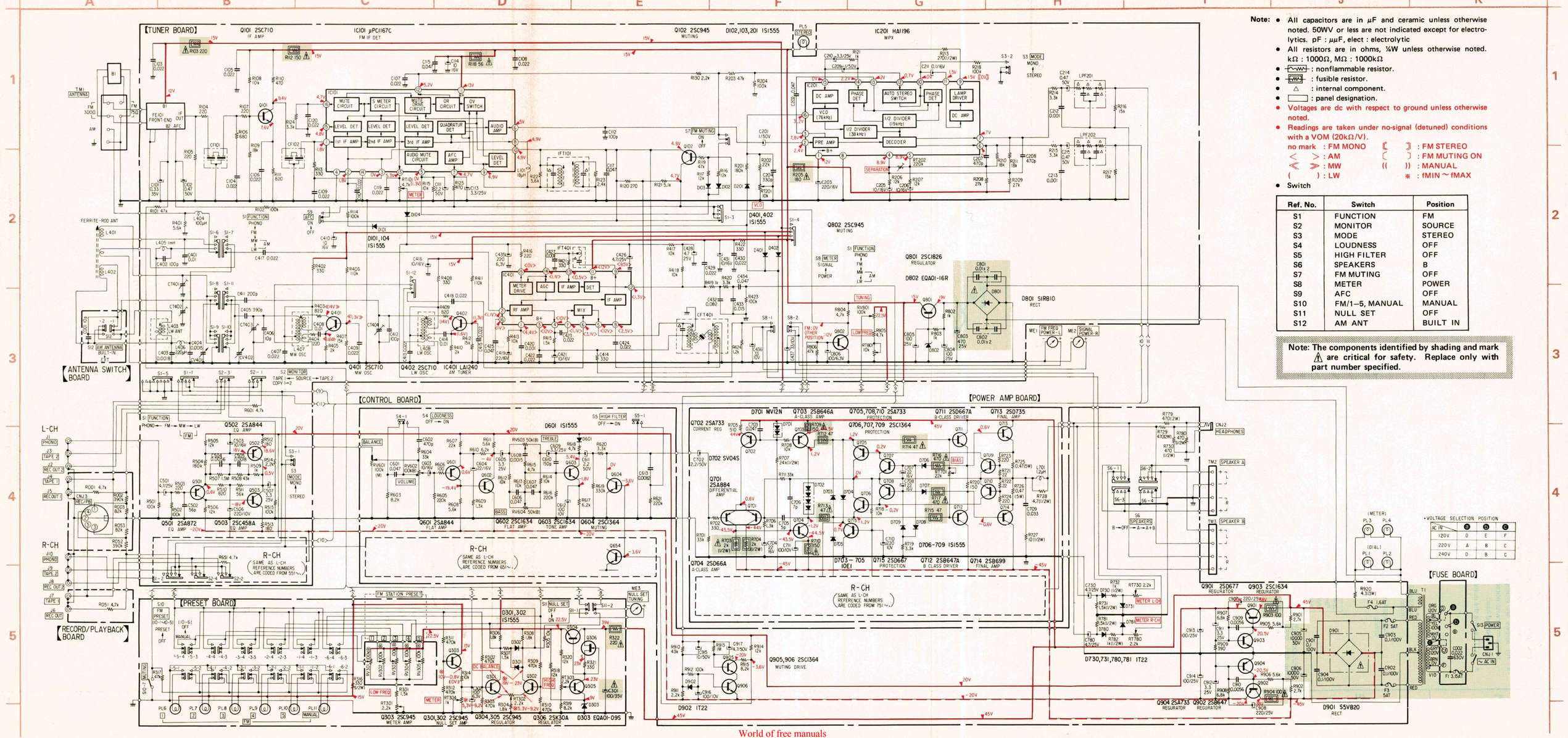

Note:

- All capacitors are in μF and ceramic unless otherwise noted. 50WV or less are not indicated except for electrolytics. pF : μμF, elect : electrolytic
- All resistors are in ohms, ¼W unless otherwise noted. kΩ : 1000Ω, MΩ : 1000kΩ
- : nonflammable resistor.
- : fusible resistor.
- △ : internal component.
- ▭ : panel designation.
- Voltages are dc with respect to ground unless otherwise noted.
- Readings are taken under no-signal (detuned) conditions with a VOM (20kΩ/V).
  - no mark : FM MONO
  - 〈 〉 : AM
  - 《 》 : MW
  - ( ) : LW
  - ⟨ ⟩ : FM STEREO
  - [ ] : FM MUTING ON
  - (( )) : MANUAL
  - ✱ : fMIN ~ fMAX
- Switch

Ref. No.	Switch	Position
S1	FUNCTION	FM
S2	MONITOR	SOURCE
S3	MODE	STEREO
S4	LOUDNESS	OFF
S5	HIGH FILTER	OFF
S6	SPEAKERS	B
S7	FM MUTING	OFF
S8	METER	POWER
S9	AFC	OFF
S10	FM/1–5, MANUAL	MANUAL
S11	NULL SET	OFF
S12	AM ANT	BUILT IN

Note: The components identified by shading and mark ⚠ are critical for safety. Replace only with part number specified.

SECTION 5 EXPLODED VIEWS

(1)

- Items with no part number and/or no description are not stocked because they are seldom required for routine service.
- All screws are Phillips (cross recess) type unless otherwise noted.
  (–) = slotted head
- (□□T) shows the number of coils in spring.
- Circled letters (Ⓐ to Ⓩ) are applicable to European models only.

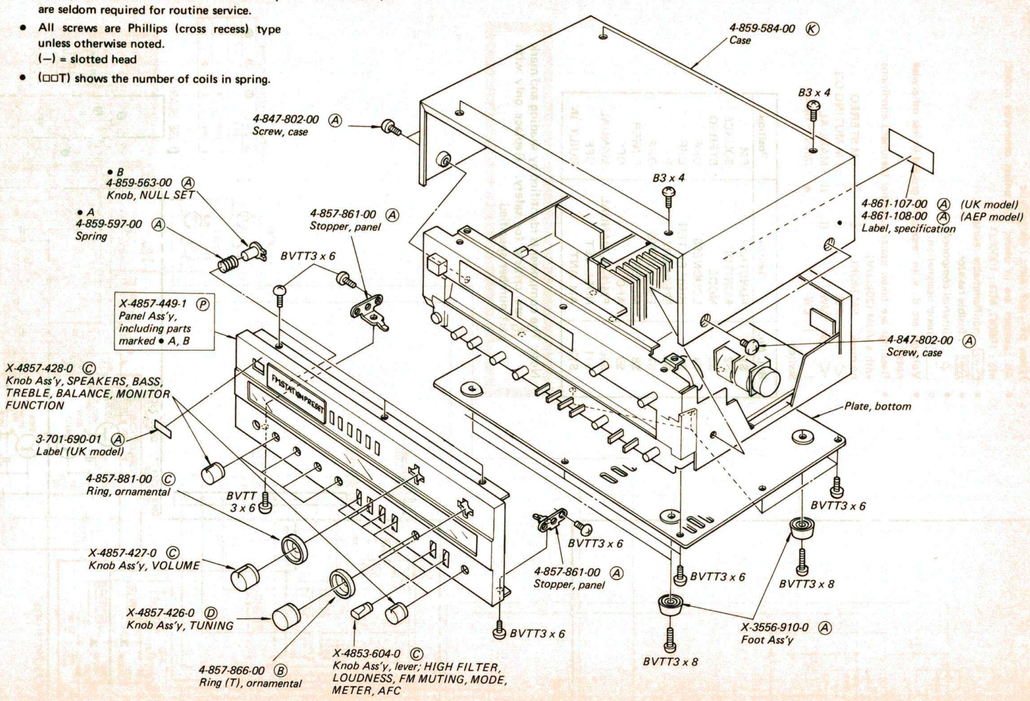

(2)

- Items with no part number and/or no description are not stocked because they are seldom required for routine service.
- All screws are Phillips (cross recess) type unless otherwise noted.
  (–) = slotted head
- (□□T) shows the number of coils in spring.
- Circled letters (Ⓐ to Ⓩ) are applicable to European models only.

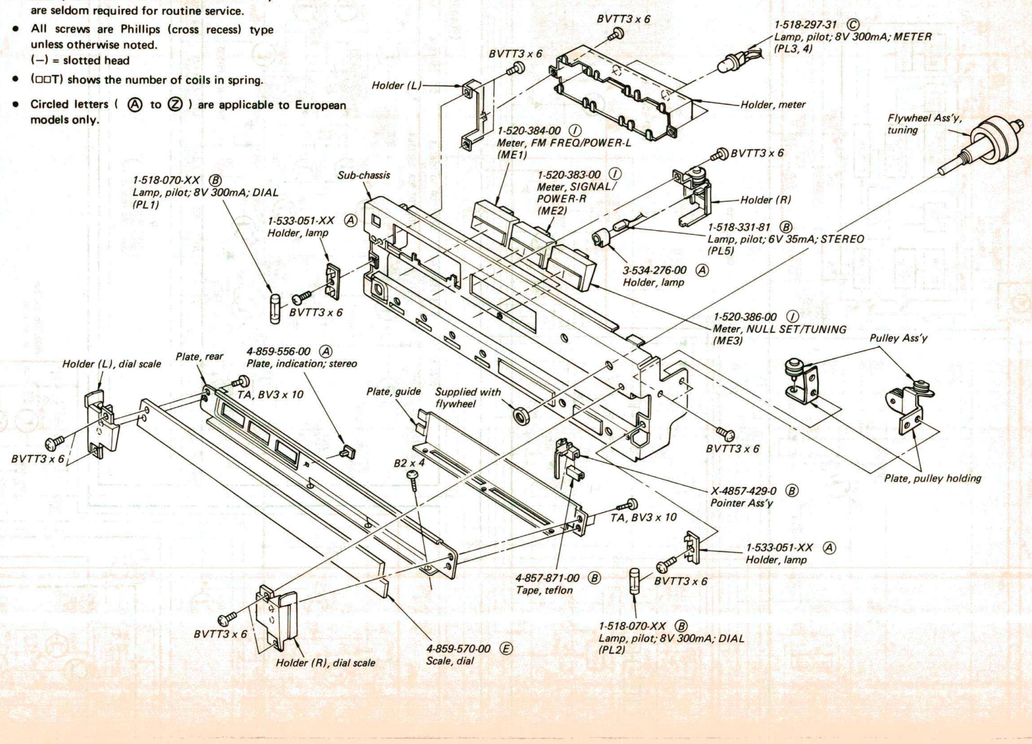

(3)

- Items with no part number and/or no description are not stocked because they are seldom required for routine service.
- All screws are Phillips (cross recess) type unless otherwise noted.
  (–) = slotted head
- (□□T) shows the number of coils in spring.
- Circled letters (Ⓐ to Ⓩ) are applicable to European models only.

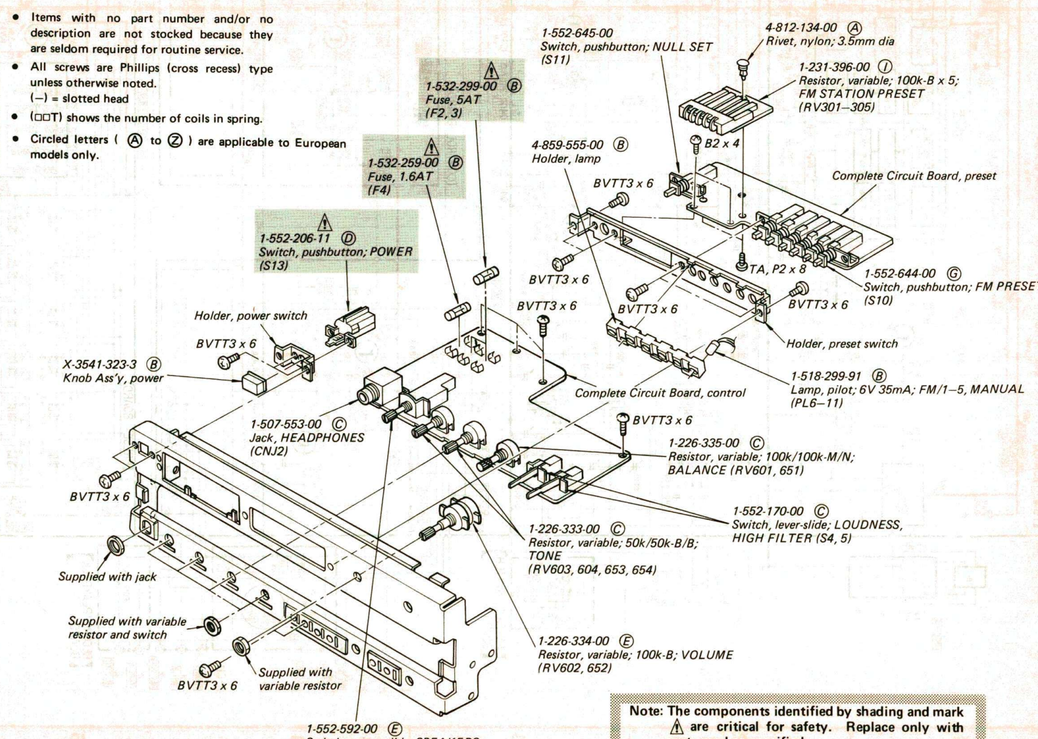

Note: The components identified by shading and mark ⚠ are critical for safety. Replace only with part number specified.

- Items with no part number and/or no description are not stocked because they are seldom required for routine service.
- All screws are Phillips (cross recess) type unless otherwise noted.
  (–) = slotted head
- (□□T) shows the number of coils in spring.
- Circled letters (Ⓐ to Ⓩ) are applicable to European models only.

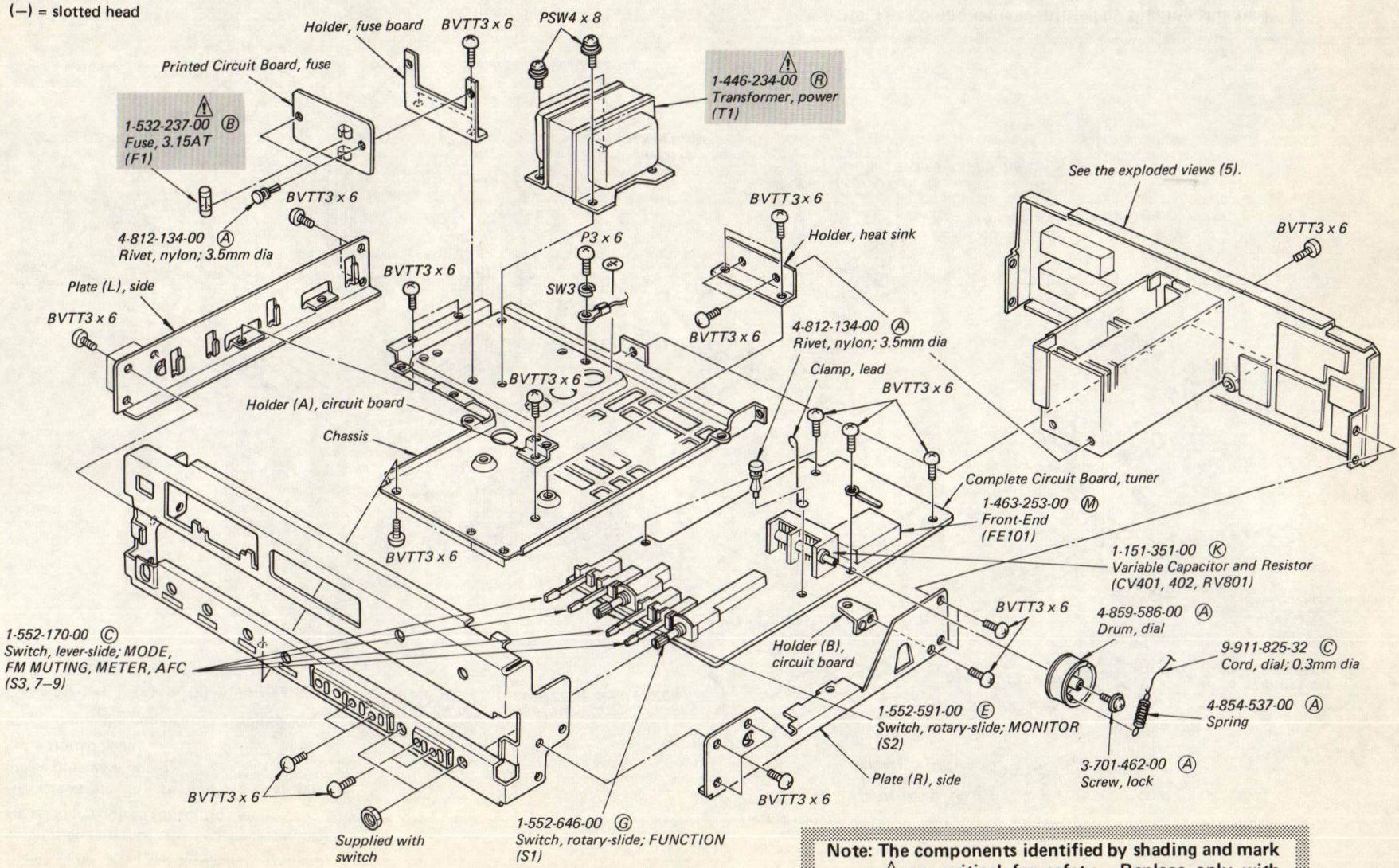

Note: The components identified by shading and mark ⚠ are critical for safety. Replace only with part number specified.

- Items with no part number and/or no description are not stocked because they are seldom required for routine service.
- All screws are Phillips (cross recess) type unless otherwise noted.
  (—) = slotted head
- (□□T) shows the number of coils in spring.
- Circled letters (Ⓐ to Ⓩ) are applicable to European models only.

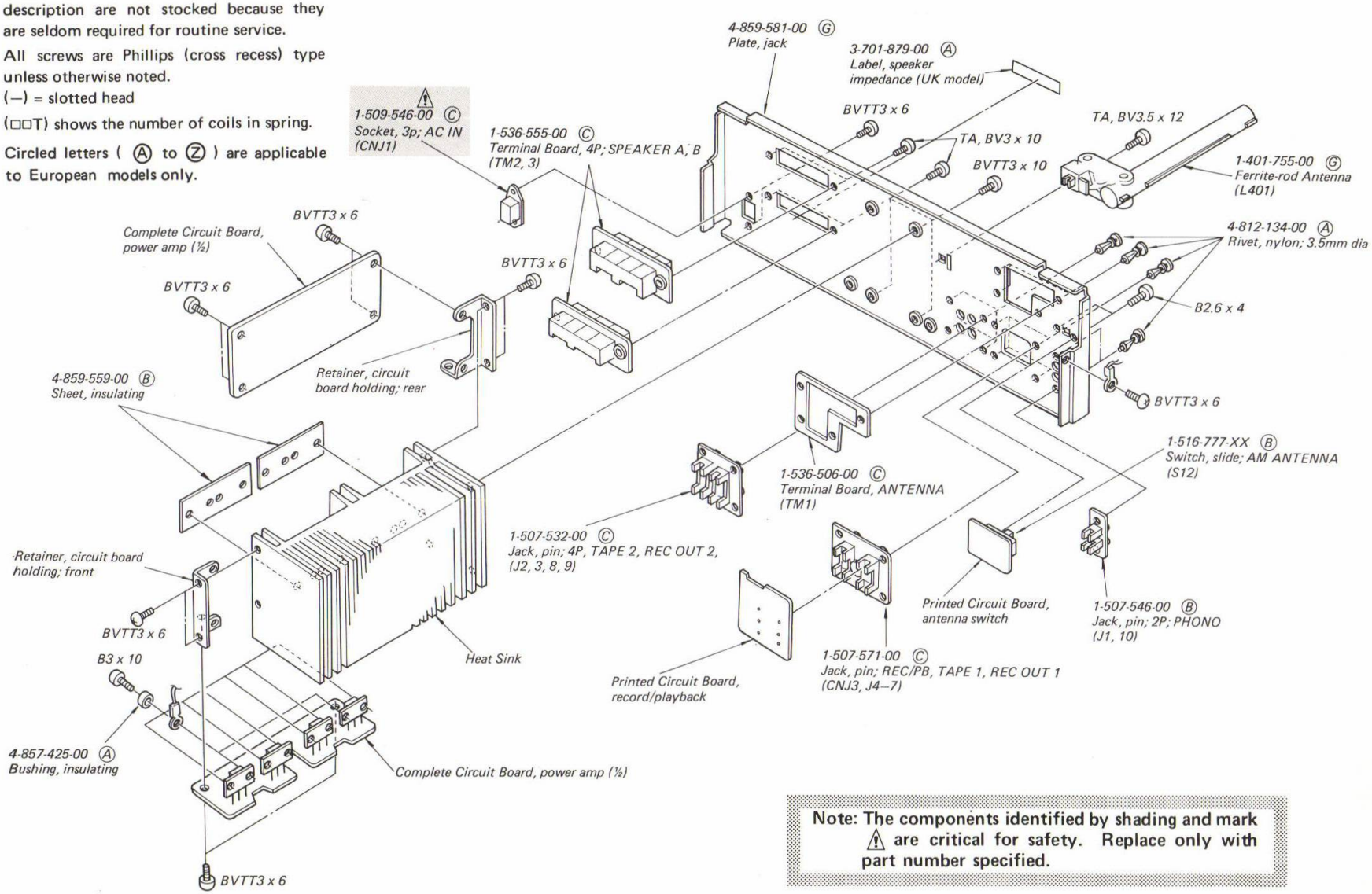

Note: The components identified by shading and mark ⚠ are critical for safety. Replace only with part number specified.

SECTION 6
ELECTRICAL PARTS LIST

- Circled letters (Ⓐ to Ⓩ) are applicable to European models only.

Ref. No.	Part No.	Description
		SEMICONDUCTORS
		Transistors
Q101	8-729-671-13	Ⓑ 2SC710
⇒ Q102	8-729-663-47	Ⓑ 2SC1364
⇒ Q301–305	8-729-663-47	Ⓑ 2SC1364
Q306	8-729-203-04	Ⓒ 2SK30A
⇒ Q401, 402	8-729-671-15	Ⓑ 2SC710-15
⇒ Q501, 551	8-729-387-27	Ⓑ 2SA872-D
⇒ Q502, 552	8-727-788-00	Ⓑ 2SA678
⇒ Q503, 553	8-729-665-47	Ⓑ 2SC1362
⇒ Q601, 651	8-727-788-00	Ⓑ 2SA678
⇒ Q602–604, Q652–654	8-729-663-47	Ⓑ 2SC1364
Q701, 751	8-765-020-00	Ⓓ 2SA884
⇒ Q702, 752	8-727-788-00	Ⓑ 2SA678
⇒ Q703, 753	8-765-082-20	Ⓒ 2SA896
⇒ Q704, 754	8-765-012-20	Ⓒ 2SC1811
⇒ Q705, 755	8-727-788-00	Ⓑ 2SA678
Q706, 756, Q707, 757	8-729-663-47	Ⓑ 2SC1364
⇒ Q708, 758	8-727-788-00	Ⓑ 2SA678
Q709, 759	8-729-663-47	Ⓑ 2SC1364
⇒ Q710, 760	8-727-788-00	Ⓑ 2SA678
Q711, 761	8-729-306-72	Ⓑ 2SD667A
Q712, 762	8-729-300-72	Ⓑ 2SB647A
Q713, 763	8-729-303-52	Ⓘ 2SD735
Q714, 764	8-729-309-92	Ⓕ 2SB699
Q715	8-729-366-71	Ⓑ 2SD667
Q765	8-729-364-71	Ⓒ 2SB647
Q801	8-729-382-62	Ⓒ 2SC1826
⇒ Q802	8-729-663-47	Ⓑ 2SC1364
⇒ Q901	8-760-413-10	Ⓒ 2SC1475
⇒ Q902	8-729-468-43	Ⓒ 2SA684
⇒ Q903	8-729-663-47	Ⓑ 2SC1364
⇒ Q904	8-727-788-00	Ⓑ 2SA678
⇒ Q905, 906	8-729-663-47	Ⓑ 2SC1364

- ⇒: Due to standardization, interchangeable replacements may be substituted for parts specified in the diagrams.

Ref. No.	Part No.	Description
		ICs
IC101	8-759-111-67	Ⓕ μPC1167C
IC201	8-759-311-96	Ⓖ HA1196
IC401	8-759-812-40	Ⓕ LA1240
		Diodes
D101–104	8-719-815-55	Ⓐ 1S1555
D201	8-719-815-55	Ⓐ 1S1555
D301, 302	8-719-815-55	Ⓐ 1S1555
⇒ D303	8-719-931-01	Ⓒ EQB01-09
D401, 402	8-719-815-55	Ⓐ 1S1555
D601, 651	8-719-815-55	Ⓐ 1S1555
D701, 751	8-719-912-00	Ⓑ MV12N
D702, 752	8-719-930-11	Ⓒ SV04S
⇒ D703–705, D753–755	8-719-200-02	Ⓑ 10E2
D706–709, D756–759	8-719-815-55	Ⓐ 1S1555
⇒ D730, 780, D731, 781	8-719-422-21	Ⓐ 1T22AM
D801	⚠ 8-719-510-10	Ⓒ SIRB10
⇒ D802	8-719-931-16	Ⓒ EQB01-16
D901	⚠ 8-719-505-20	Ⓕ S5VB20
⇒ D902	8-719-422-21	Ⓐ 1T22AM
		COILS
L101	1-407-741-00	Ⓑ 18μH, microinductor
L401	1-401-755-00	Ⓖ Ferrite-rod Antenna
L403	1-401-664-00	Ⓑ LW ANT
L404	1-401-169-XX	Ⓐ 100μH, microinductor
L405	1-401-195-XX	Ⓑ 1mH, microinductor
L406	1-401-173-XX	Ⓑ 220μH, microinductor
L407	1-405-826-00	Ⓑ MW OSC
L408	1-405-827-00	Ⓑ LW OSC

Note: The components identified by shading and mark ⚠ are critical for safety. Replace only with part number specified.

- Circled letters (Ⓐ to Ⓩ) are applicable to European models only.

TRANSFORMERS AND FILTERS

Ref. No.	Part No.	Description
B1	1-417-014-31	Ⓑ Transformer, antenna matching
CF101,102	1-527-344-00	Ⓑ Filter, ceramic
CFT401	1-404-087-00	Ⓓ AM IFT
IFT101	1-404-011-00	Ⓒ FM IFT
IFT401	1-404-085-00	Ⓑ AM IFT
LPF201,202	1-231-224-00	Ⓑ Filter, low-pass
T1	⚠1-446-234-00	Ⓡ Transformer, power

CAPACITORS

All capacitors are in μF and ceramic unless otherwise noted.
50WV or less are not indicated except for electrolytics.
pF : μμF, elect : electrolytic

Ref. No.	Part No.	Description		
C001	1-102-947-61	Ⓐ 10p		
C002	⚠1-129-718-11	Ⓐ 0.022	630V	polyethylene
C101	1-131-212-61	Ⓐ 0.33	35V	tantalum
C102	1-121-911-00	Ⓑ 0.47	50V	elect
C103–108	1-101-924-00	Ⓐ 0.022		
C109, 110	1-101-924-00	Ⓐ 0.022		
C111	1-121-450-00	Ⓐ 2.2	50V	elect
C112	1-102-973-00	Ⓐ 100p		
C113	1-121-392-00	Ⓐ 3.3	25V	elect
C114	1-121-651-00	Ⓐ 10	16V	elect
C115	1-101-925-00	Ⓐ 0.047		
C117	1-101-925-00	Ⓐ 0.047		
C119, 120	1-101-924-00	Ⓐ 0.022		
C201	1-121-391-00	Ⓐ 1	50V	elect
C202	1-108-246-00	Ⓐ 0.047		mylar
C203	1-123-421-00	Ⓑ 220	16V	elect
C204	1-104-065-00	Ⓐ 330p		polyethylene
C205, 206	1-121-651-00	Ⓐ 10	16V	elect
C207, 208	1-102-824-00	Ⓐ 470p		
C209	1-121-391-00	Ⓐ 1	50V	elect
C210	1-121-392-00	Ⓐ 3.3	25V	elect
C211	1-131-451-00	Ⓐ 0.1	16V	tantalum
C212, 213	1-108-227-00	Ⓐ 0.001		mylar
C214, 215	1-121-911-00	Ⓐ 0.47	50V	elect
C301	⚠1-121-357-00	Ⓑ 100	35V	elect
C302	1-121-413-00	Ⓐ 100	6.3V	elect
C401	1-108-239-00	Ⓐ 0.01		mylar
C402	1-102-973-00	Ⓐ 100p		
C403	1-108-352-00	Ⓑ 0.0018		mylar
C404	1-108-228-00	Ⓐ 0.0015		mylar
C405	1-104-067-00	Ⓐ 390p		polystyrol
C406	1-102-947-00	Ⓐ 10p		
C407	1-108-242-00	Ⓐ 0.022		mylar
C408	1-108-239-00	Ⓐ 0.01		mylar
C409	1-108-242-00	Ⓐ 0.022		mylar
C410	1-121-651-00	Ⓐ 10	16V	elect
C411	1-104-060-00	Ⓐ 200p		polystyrol
C412	1-102-973-00	Ⓐ 100p		
C413	1-108-242-00	Ⓐ 0.022		mylar
C414	1-108-239-00	Ⓐ 0.01		mylar
C415	1-108-242-00	Ⓐ 0.022		mylar
C416	1-121-651-00	Ⓐ 10	16V	elect
C417, 418	1-101-924-00	Ⓐ 0.022		
C419	1-121-479-00	Ⓐ 22	16V	elect
C420	1-102-074-00	Ⓐ 0.001		
C421	1-121-651-00	Ⓐ 10	16V	elect
C422–424	1-101-924-00	Ⓐ 0.022		
C425	1-101-925-00	Ⓐ 0.047		
C426	1-121-395-00	Ⓐ 4.7	25V	elect
C427	1-108-227-00	Ⓐ 0.001		
C428	1-121-395-00	Ⓐ 4.7	25V	elect
C429, 430	1-101-924-00	Ⓐ 0.022	25V	elect
C431	1-121-651-00	Ⓐ 10	16V	elect
C432	1-108-362-00	Ⓐ 0.082		mylar
C433	1-108-240-00	Ⓐ 0.015		mylar
C434	1-108-246-00	Ⓐ 0.047		mylar
C435	1-121-419-00	Ⓑ 220	6.3V	elect
C436, 437	1-121-402-00	Ⓐ 33	10V	elect
C501, 551	1-121-450-00	Ⓐ 4.7	25V	elect
C502, 552	1-101-884-00	Ⓐ 56p		
C503, 553	1-121-651-00	Ⓐ 10	16V	elect
C504, 554	1-108-573-00	Ⓐ 0.0056		mylar
C505, 555	1-108-561-00	Ⓐ 0.0018		mylar
C506, 556	1-121-420-00	Ⓐ 220	10V	elect

Note: The components identified by shading and mark ⚠ are critical for safety. Replace only with part number specified.

• Circled letters (Ⓐ to Ⓩ) are applicable to European models only.

Ref. No.	Part No.	Description			
C507, 557	1-121-913-00	Ⓐ 3.3	25V	elect
C601, 651	1-108-595-00	Ⓐ 0.047		mylar
C602, 652	1-102-824-00	Ⓐ 470p		
C603, 653	1-121-651-00	Ⓐ 10	16V	elect
C604, 654	1-121-479-00	Ⓐ 22	16V	elect
C605, 655	1-121-392-00	Ⓐ 3.3	25V	elect
C606, 656, C607, 657	1-108-595-00	Ⓐ 0.047		mylar
C608, 658	1-108-559-00	Ⓐ 0.0015		mylar
C609, 659	1-121-392-00	Ⓐ 3.3	25V	elect
C610, 660	1-101-361-51	Ⓐ 150p		
C611, 661	1-121-450-00	Ⓐ 2.2	50V	elect
C612, 662	1-121-414-00	Ⓐ 100	10V	elect
C613, 663	1-108-577-00	Ⓐ 0.0082		mylar
C702, 752	1-121-450-00	Ⓐ 2.2	50V	elect
C703, 753	1-108-246-00	Ⓐ 0.047		mylar
C704, 754	1-121-479-00	Ⓐ 22	16V	elect
C705, 755	1-102-807-00	Ⓐ 5p		
C706, 756	1-102-809-00	Ⓐ 7p		
C707, 757, C708, 758	1-121-479-00	Ⓐ 22	16V	elect
C709, 759	1-108-244-00	Ⓐ 0.033		mylar
C710	1-121-420-00	Ⓐ 220	10V	elect
C711, 761	1-121-414-00	Ⓐ 100	10V	elect
C730, 780	1-121-395-00	Ⓐ 4.7	25V	elect
C801, 802	⚠1-102-355-00	Ⓐ 0.01/0.01	500V	
C803	⚠1-121-733-00	Ⓑ 470	25V	elect
C804, 805	1-121-417-00	Ⓑ 100	25V	elect
C806	1-121-413-00	Ⓐ 100	6.3V	elect
C901–904	⚠1-108-389-00	Ⓑ 0.1	100V	elect
C905, 906	⚠1-123-257-00	Ⓘ 10,000	50V	elect
C907, 908	1-121-422-00	Ⓑ 220	25V	elect
C909, 910	1-108-355-00	Ⓐ 0.0056		mylar
C911, 912	1-121-392-00	Ⓐ 3.3	25V	elect
C913, 914	1-121-416-00	Ⓑ 100	25V	elect
C915	1-121-738-00	Ⓐ 10	50V	elect
C916	1-121-414-00	Ⓐ 100	10V	elect
C917	1-121-396-00	Ⓐ 4.7	50V	elect

Ref. No.	Part No.	Description
CT401	1-141-178-00	Ⓑ Trimmer
CT402–404	1-141-171-00	Ⓑ Trimmer
CV401,402, RV801	1-151-351-00	Ⓚ Variable Capacitor and Resistor, TUNING

RESISTORS

All resistors are in ohms. Common ¼W carbon resistors are omitted. Refer to the list on page 6 for their part numbers.

R103	⚠1-211-530-00	Ⓒ 220	¼W	carbon (nonflammable)
R112	⚠1-211-526-00	Ⓒ 150	¼W	carbon (nonflammable)
R118	⚠1-211-516-00	Ⓑ 56	¼W	carbon (nonflammable)
R205	⚠1-211-528-00	Ⓐ 180	¼W	carbon (nonflammable)
R213	1-244-859-00	Ⓐ 270	½W	carbon
R316	1-244-861-00	Ⓐ 330	½W	carbon
R322	⚠1-211-530-00	Ⓒ 220	¼W	carbon (nonflammable)
R703,753, R704,754	⚠1-211-551-00	Ⓐ 2k	½W	carbon (nonflammable)
R707, 757	1-244-906-00	Ⓐ 24k	½W	carbon
R709,759, R710,760	⚠1-211-526-00	Ⓒ 150	¼W	carbon (nonflammable)
R712–715, R762–765	⚠1-211-514-00	Ⓐ 47	¼W	carbon (nonflammable)
R716,766, R717,767	⚠1-211-538-00	Ⓐ 470	¼W	carbon (nonflammable)
R725,775, R726,776	1-217-158-00	Ⓐ 0.47	5W	metal oxide
R727, 777	1-244-825-00	Ⓐ 10	½W	
R728, 778	1-244-817-00	Ⓐ 4.7	½W	
R729, 779	1-206-656-00	Ⓐ 470	2W	metal oxide
R730, 780	1-244-865-00	Ⓐ 470	½W	
R731, 781	1-244-877-00	Ⓐ 1.5k	½W	
R732, 782	1-244-873-00	Ⓐ 1k	½W	
R903, 904	⚠1-211-522-00	Ⓒ 100	¼W	carbon (nonflammable)

Note: The components identified by shading and mark ⚠ are critical for safety. Replace only with part number specified.

- Circled letters (Ⓐ to Ⓩ) are applicable to Europen models only.

Ref. No.	Part No.	Description
R920	1-206-502-00	Ⓑ 4.3 3W metal oxide
RT101	1-224-644-XX	Ⓑ Adjustable, 4.7k; METER
RT201	1-224-645-XX	Ⓑ Adjustable, 10k; VCO
RT202	1-224-649-XX	Ⓑ Adjustable, 220k; SEPARATION
RT301	1-224-643-XX	Ⓑ Adjustable, 2.2k; LOW FREQ
RT302	1-224-643-XX	Ⓑ Adjustable, 2.2k; DC BALANCE
RT303	1-224-643-XX	Ⓑ Adjustable, 2.2k; HIGH FREQ
RT304	1-224-642-XX	Ⓑ Adjustable, 1k; METER
RT701,751	1-224-253-XX	Ⓒ Adjustable, 22k; BIAS
RT730,780	1-224-250-XX	Ⓒ Adjustable, 2.2k; METER-L, R
RT801	1-224-645-XX	Ⓑ Adjustable, 10k; LOW FREQ
RV301–305	1-231-396-00	Ⓘ Variable, 100k (B) x 5; FM STATION PRESET
RV601,651	1-226-335-00	Ⓒ Variable, 100k/100k (M/N); BALANCE
RV602,652	1-226-334-00	Ⓔ Variable, 100k (B); VOLUME
RV603,653 RV604,654	1-226-333-00	Ⓒ Variable, 50k/50k (B/B); TONE (BASS, TREBLE)

SWITCHES

S1	1-552-646-00	Ⓖ Rotary-slide, FUNCTION
S2	1-552-591-00	Ⓔ Rotary-slide, MONITOR
S3	1-552-170-00	Ⓒ Lever-slide, MODE
S4, 5	1-552-170-00	Ⓒ Lever-slide, LOUDNESS, HIGH FILTER
S6	1-552-592-00	Ⓔ Rotary-slide, SPEAKERS
S7–9	1-552-170-00	Ⓒ Lever-slide, FM MUTING, METER, AFC
S10	1-552-644-00	Ⓖ Pushbutton, FM PRESET
S11	1-552-645-00	Ⓑ Pushbutton, NULL SET
S12	1-516-777-XX	Ⓑ Slide, AM ANTENNA
S13	⚠1-552-206-11	Ⓓ Pushbutton, POWER

JACKS

J1, 10	1-507-546-00	Ⓑ Pin, 2P; PHONO
J2, 3 J8, 9	1-507-532-00	Ⓒ Pin, 4P; TAPE 2, REC OUT 2
CNJ1	⚠1-509-546-00	Ⓒ Socket, 3P; AC IN
CNJ2	1-507-553-00	Ⓒ HEADPHONES
CNJ3 (J4–7)	1-507-571-00	Ⓒ Pin, REC/PB, TAPE 1, REC OUT 1

FUSES

F1	⚠1-532-237-00	Ⓑ Fuse, 3.15AT
F2, 3	⚠1-532-299-00	Ⓑ Fuse, 5AT
F4	⚠1-532-259-00	Ⓑ Fuse, 1.6AT

MISCELLANEOUS

FE101	1-463-253-00	Ⓜ Front-end
ME1	1-520-384-00	Ⓘ Meter, FM FREQ/POWER-L
ME2	1-520-383-00	Ⓘ Meter, SIGNAL/POWER-R
ME3	1-520-386-00	Ⓘ Meter, NULL SET/TUNING
PL1, 2	1-518-070-XX	Ⓑ Lamp, pilot; 8V 300mA; DIAL
PL3, 4	1-518-297-31	Ⓒ Lamp, pilot; 8V 300mA; METER
PL5	1-518-331-81	Ⓑ Lamp, pilot; 6V 35mA; STEREO
PL6–11	1-518-299-91	Ⓑ Lamp, pilot; 6V 35mA; FM/1–5, MANUAL
TM1	1-536-506-00	Ⓒ Terminal Board, ANTENNA
TM2, 3	1-536-555-00	Ⓒ Terminal Board, 4P; SPEAKER A, B
	1-533-051-XX	Ⓐ Holder, lamp

ACCESSORIES & PACKING MATERIAL

Part No.	Description
1-501-161-00	Ⓕ Antenna, feeder
⚠1-534-819-00	Ⓖ Cord, power (UK model)
3-701-020-00	Ⓐ Bag, polyethylene
3-701-300-00	Ⓐ Polyethylene
3-701-690-01	Ⓐ Label (UK model)
3-701-879-00	Ⓐ Label, speaker impedance (UK model)
3-770-670-11	Ⓕ Manual, instruction
4-859-501-00	Ⓒ Cushion, lower
4-861-111-00	Ⓕ Carton
4-861-112-00	Ⓒ Cushion, upper

Note: The components identified by shading and mark ⚠ are critical for safety. Replace only with part number specified.

Sony Corporation

9-958-584-01

78K0474-1
Printed in Japan