STR-AV270X/AV370X

SERVICE MANUAL

AEP Model
STR-AV270X/AV370X
UK Model
E Model
STR-AV370X

Photo: STR-AV370X

SPECIFICATIONS

Amplifier section
Continuous RMS power output (8 ohms, at 1 kHz less than 0.8% total harmonic distortion)
STR-AV270X : 30W+30W
STR-AV370X : 50W+50W
Dynamic power (at 1 kHz IHF)
55W+55W (8 ohms)
Harmonic distortion
Less than 0.8% at rated output
Frequency response
PHONO: RIAA equalization curve ± 0.5 dB
CD, VIDEO, TAPE: 10Hz – 50kHz +0 −3 dB

Inputs

	Sensitivity	Inpedance	S/N (weighting network, input level)
PHONO	2.5mV	50 kilohms	74 dB 72 dB* (A, 2.5 mV)
CD VIDEO TAPE	150mV	50 kilohms	95 dB 80 dB* (A, 150 mV)

* '78 IHF

Outputs

REC OUT, VIDEO (AUDIO) OUT	Voltage 150 mV Impedance 10 kilohms
SPEAKER A, B	Accepts speakers of 8 – 16 ohoms
HEADPHONES	Accepts low and high impedance headphones

Tone controls
BASS: ± 10 dB at 100 Hz
TREBLE: ± 10 dB at 10 kHz
Muting
– 20 dB
DBFB
+12 dB at 70Hz

Tuner section

	FM tuner section	AM tuner section
Tuning rage	87.5 – 108 MHz	531 – 1,602 kHz (with the AM tuning interval set at 9 kHz) 530 – 1,710 kHz (with the AM tuning interval set at 10 kHz) (E model)
Antenna terminals	300 ohms, balanced 75 ohms, unbalanced	External atenna terminal

– Continued on next page –

MICROFILM

FM STEREO/FM-AM RECEIVER

SONY®

Sensitivity at 50 dB quieting	18.3 dBf, 4.5 μV (mono) 38.3 dBf, 45 μV (stereo)	–
Usable sensitivity	11.2 dBf, 2 μV (IHF)	Loop antenna: 500 μV (at 1,000 kHz)
Signal-to-noise ratio	76 dB (mono) 70 dB (stereo)	54 dB (at 50 mV/m)
Harmonic distortion	0.3% (mono), 0.5% (stereo) at 1 kHz	0.5% (at 50 mV/m, 400 Hz)
Selectivity	60 dB at 400 kHz	40 dB at 10 kHz
Separation	45 dB at 1 kHz	–
Frequency response	30 Hz – 15 kHz $^{+0.5}_{-2}$ dB	–

General

System
- Tuner section: PLL quart-locked digital synthesizer system
- Preanplifier section: low-noise NF type equalizer amp
- Power amlifier section: quasi-complementary SEPP

Power requirements
- AEP, Germany models: 220V AC, 50/60 Hz
- UK model: 240V AC, 50/60 Hz
- E model: 110-120V, 220-230V, 240V AC, adjustable, 50/60 Hz

Power consumption
- STR-AV270X: 60W
- STR-AV370X: 115W
- In standby condition: 5W (STR-AV370X)

AC outlets
- One switched (100W) (STR-AV370X)

Dimensions
- Approx. 430 × 122.5 × 300mm (w/h/d)
- (17 × 4 7/8 × 11 7/8 inches)
- including projecting parts and controls

Weight
- STR-AV270X: Approx. 5.5 kg (12 lb 2 oz)
- STR-AV370X: Approx. 6.5 kg (14 lb 5 oz)

Accessories supplied
- FM wire antenna (1)
- AM loop antenna (1)
- Remote Commander (1) (STR-AV370X)
- Sony batteries SUM 3(NS) (2)

Design and specifications subject to change without notice.

TABLE OF CONTENTS

Section	Title	Page
	Specifications	1
	Model Identification	2
1.	**GENERAL**	
	Location and Function of Controls	3
	Receiving FM/AM Broardcasts	4
2.	**ELECTRICAL ADJUSTMENTS**	6
3.	**DIAGRAMS**	
3-1.	Block Diagram	7
3-2.	Printed Wiring Boards – Main Section –	11
3-3.	Schematic Diagram – Main Section –	15
3-4.	Printed Wiring Boards – Tuner Section –	19
3-5.	Schematic Diagram – Tuner Section –	20
3-6.	Explanation of IC301 (μPD75206)	23
4.	**EXPLODED VIEWS**	25
5.	**ELECTRICAL PARTS LIST**	27

MODEL IDENTIFICATION

– Specification Labels –

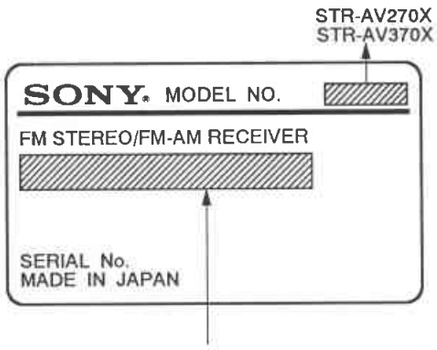

AEP, Germany model:	AC:	220 – 230 V~50/60Hz
UK model:	AC:	240 V ~50/60 Hz
E model:	AC:	120/220/240 V ~50/60 Hz 115 W

SAFETY-RELATED COMPONENT WARNING!!

COMPONENTS IDENTIFIED BY MARK ⚠ OR DOTTED LINE WITH MARK ⚠ ON THE SCHEMATIC DIAGRAMS AND IN THE PARTS LIST ARE CRITICAL TO SAFE OPERATION. REPLACE THESE COMPONENTS WITH SONY PARTS WHOSE PART NUMBERS APPEAR AS SHOWN IN THIS MANUAL OR IN SUPPLEMENTS PUBLISHED BY SONY.

This section is extracted from instruction manual.

SECTION 1
GENERAL

Location and Function of Controls

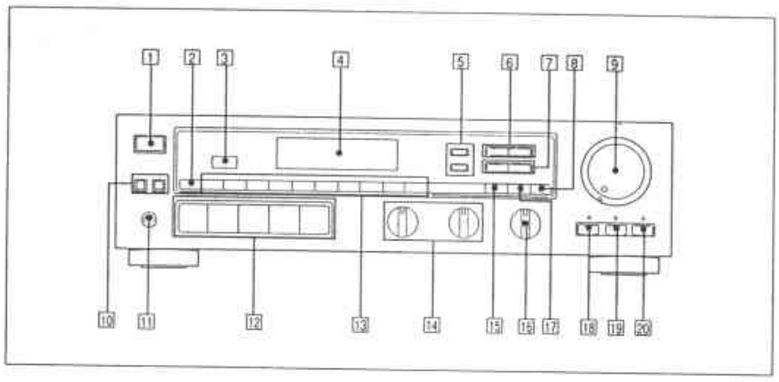

1 **POWER switch**

2 **SHIFT button**

3 **Remote sensor (STR-AV23/AV370X/AV570X)**

4 **Display window**

5 **BAND selectors**

6 **TUNING +/– buttons**

7 **PRESET +/– buttons**

8 **FM MODE button**
When an FM stereo program is noisy or hard to receive, press this button. The STEREO indicator goes out (the sound is heard in monaural, but the reception will be improved). To return to the stereo mode, press again or change the frequency.

9 **VOLUME control and indicator (STR-AV370X)**

10 **SPEAKERS selectors**
Depress to select which speaker system to drive. For both speaker systems, depress A and B.

11 **HEADPHONES jack (stereo phone jack)**
Connect the headphones to this jack for private listening.

12 **Function selectors**

13 **Numeric buttons**

14 **TONE controls**
Turn the TREBLE control to adjust the high frequency sound. Turn BASS control to adjust the low frequency sound.

15 **MEMORY button**

16 **BALANCE control**
Adjust to correct stereo imaging, when the speaker position is not symmetrical.

17 **DIRECT TUNING button**

18 **DBFB (Dynamic Bass Feed Back) button and indicator**
To reinforce the bass frequency sound, press this button.

19 **MUTING button and indicator (STR-AV370X)**
Press to attenuate the sound level immediately (-20 dB attenuation). Pressing this button makes the indicator be lighted. To restore the sound level, press again.

20 **SURROUND button and indicator**
To obtain the surround effect, press this button.

Remote Commander RM-S103 (STR- AV370X)

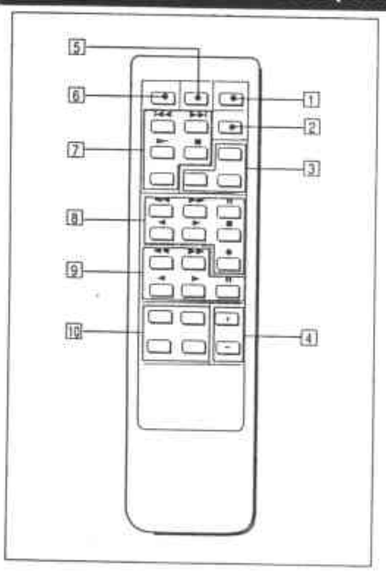

1 **POWER button**

2 **DBFB button**

3 **TUNER PRESET +/– and SHIFT buttons**

4 **VOLUME +/– buttons**

5 **SURROUND button**

6 **MUTING button**

7 **CD player operation buttons**
D. (disc) SKIP: When your CD player is equipped with a multi-disc changer, use this button to select loaded disc.
CD ►: Selects the CD function and starts CD playback.

8 **DECK B operation buttons** (also for single tape deck)
DECK B ◄/► Select tape function and start tape playback on deck B.

9 **DECK A operation buttons**
DECK A ◄/► Select tape function and start tape playback on deck A.

10 **Function select buttons**

Notes on the remote commander
For the functions other than the receiver's own ones, the remote commander is effective only with Sony components having a remote sensor with a ▣ mark.

Receiving FM/AM Broadcasts

How to receive a broadcast

When you know the frequency	See "Direct Access Tuning".
When you do not know the frequency	FM: See "Automatic Tuning". AM: See "Manual Tuning".
Tuning in a preset frequency	See "Preset Tuning".

Direct Access Tuning

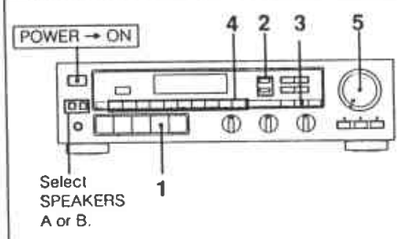

1 **Press TUNER.**
2 **Select FM or AM.**
3 **Press TUNING DIRECT.**
4 **Press the appropriate numeric buttons to enter the frequency.** (See examples below.)
5 **Adjust the volume.**

Example 1: FM 108.00 MHz

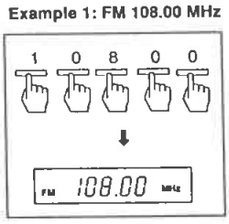

Example 2: AM 1350 kHz

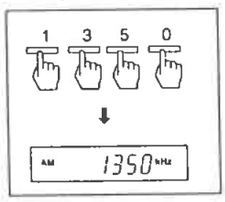

For entering AM frequencies
You do not need to enter the last "0".

Correcting the entered frequency
Repeat the above steps from the beginning.

If the frequency figures flash in the display window
The entered number is outside the receiver's frequency range (FM 87.5 to 108 MHz; AM 530 to 1710 kHz).
Enter the correct frequency.

Changing the AM tuning interval
The AM tuning interval is preset to 9 kHz. To use the receiver where the frequency allocation system is based on a 10 kHz interval, make the following adjustments.
1 Turn on the power and tune in any AM station.
2 Turn off the power.
3 Press POWER while pressing PRESET "+" or "–".
To reset the AM tuning interval, repeat the above steps.
Caution
When the interval is changed, all preset stations which you have memorized will be erased. After changing the interval, be sure to preset the stations again.

Automatic Tuning (for FM reception)

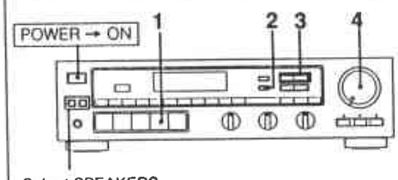

1 **Press TUNER.**
2 **Select FM.**
3 **Press + or – TUNING.**

When a station is received, automatic tuning stops automatically. To change the station, press + or - again.

4 **Adjust the volume.**

When sweeping does not stop at the desired station
The signal strength is weak. Tune in the station as described in "Direct Access Tuning".

Manual Tuning (for AM reception)

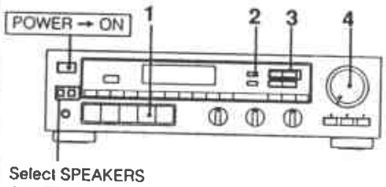

Select SPEAKERS A or B.

1 **Press TUNER.**
2 **Select AM.**
3 **Press + or – TUNING.**

Each time + or – is pressed, the frequency will change by 10 kHz. To change the frequency continuously, keep the button pressed.

4 **Adjust the volume.**

Quickly tuning in a roughly known frequency
Proceed as the following example.
Example: The station between AM 700 and AM 800 kHz.

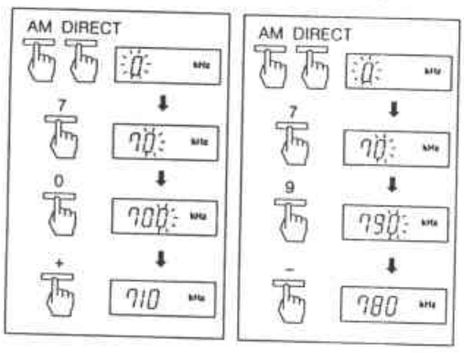

Preset Tuning

A total of 30 FM/AM stations can be memorized in any desired sequence.

Memorizing a Station

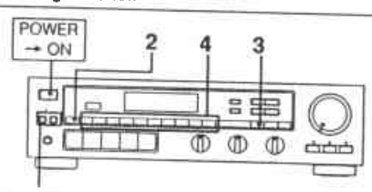

Select SPEAKERS A or B.

1 **Tune in the desired station.** (See "Automatic Tuning", "Manual Tuning" or "Direct Access Tuning".)
2 **Press SHIFT to select the memory page (A, B or C).**
3 **Press MEMORY.**
Memory indicator appears for a few seconds.
4 **Press the desired numeric button (1 to 0), while the MEMORY indicator is displayed.**

Repeat above steps for presetting other desired stations.

Use of memory pages
The memory pages (A, B and C) can be used to classify stations according to the music category, station band, etc.

Replacing a preset station
Preset another station on the number of the station to be replaced. The previously preset station will be erased.

Tuning in a Preset Station

Method A: Direct
1 **Press TUNER.**
2 **Press SHIFT to select memory page (A, B or C).**
3 **Press the preset numeric button.**
4 **Adjust the volume.**

Method B: Scan
1 **Press TUNER.**
2 **Press + or – PRESET.**
Each time you press + or –, the preset station of the next higher or lower number is tuned in.

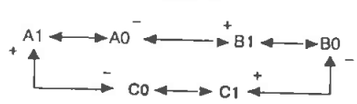

- If you keep pressing + or –, preset stations are successively tuned in. Release the button when the desired preset station is tuned in.

3 **Adjust the volume.**

SECTION 2
ELECTRICAL ADJUSTMENTS

FM SECTION

• FM Discriminator (NULL) Adjustment

Setting :

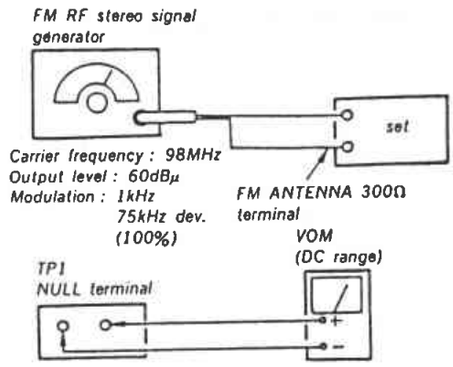

Procedure :

1. Tune the set to 98MHz.
2. Adjust T21 for 0V reading on the VOM.

Note : FM Tuning Level adjustment should be made after FM discriminator adjustment.

• FM Stereo Operation Level Adjustment

Setting :

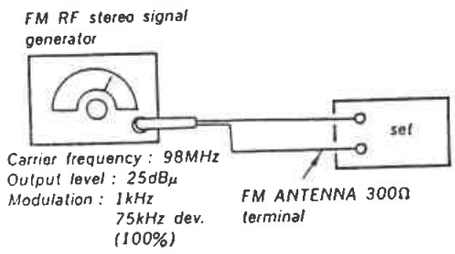

Procedure :

1. Tune the set to 98MHz.
2. Adjust RV24 so that the STEREO LED goes on.

• FM Stereo Separation Adjustment

Setting :

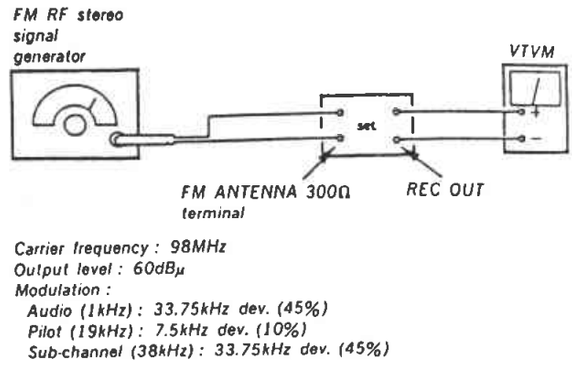

Procedure :

Tune the set to 98MHz.

FM stereo signal generator output channel	VTVM connection	VTVM reading (dB)
L-CH	L-CH	Ⓐ
R-CH	L-CH	Ⓑ Adjust RV21 for minimum reading.
R-CH	R-CH	Ⓒ
L-CH	R-CH	Ⓓ Adjust RV21 for minimum reading.

L-CH Stereo separation : Ⓐ−Ⓑ

R-CH Stereo separation : Ⓒ−Ⓓ

The separations of both channels should be equal.

Note on Ceramic Filter (CF1, 2, 3) Replacement.

This set employs two ceramic filters (CF1, 2, 3) which should have tha same color marking to identify their center frequency. Therefore FM IF offset adjustment by (* A, * B) connection is necessary to match the center frequency of the ceramic filters used with FM intermediate frequency.

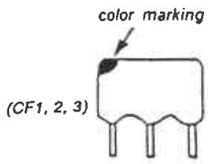

○ : short
× : open

Ceramic filter		Connection		FM intermediate frequency (MHz)
Color mark	Center frequency (MHz)	* A (D326)	* B (D327)	
White	10.750	×	○	10.750
Red	10.700	×	×	10.700
Black	10.650	○	○	10.650

SECTION 3
DIAGRAMS

3-1. BLOCK DIAGRAM

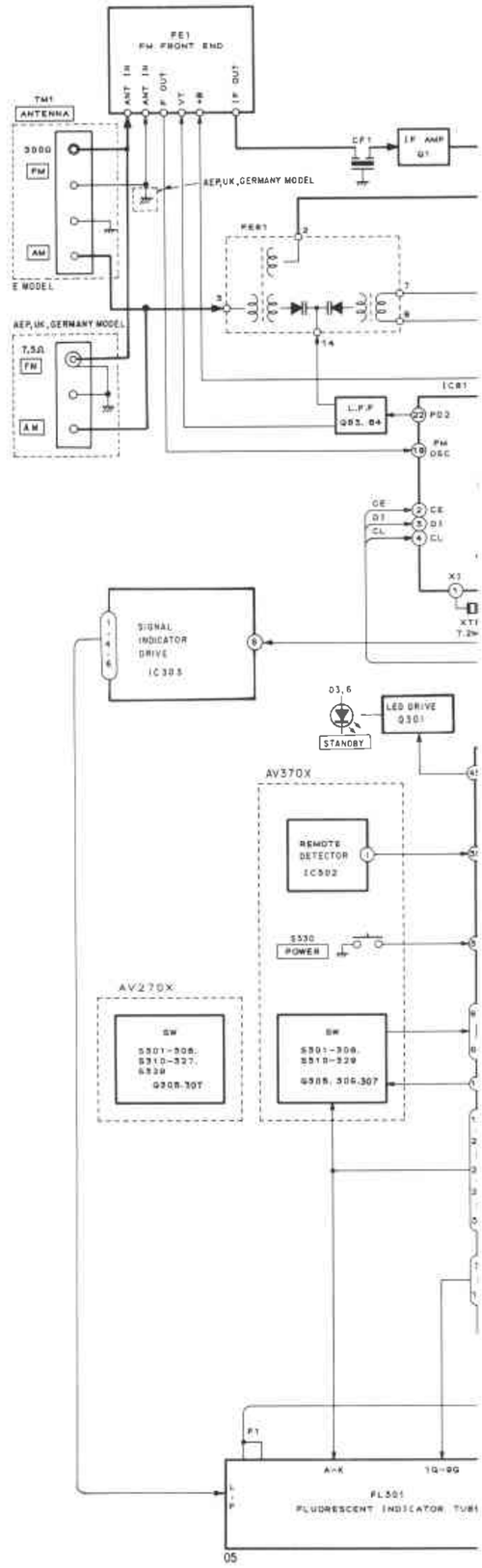

AM SECTION

• AM Meter Adjustment

Setting :

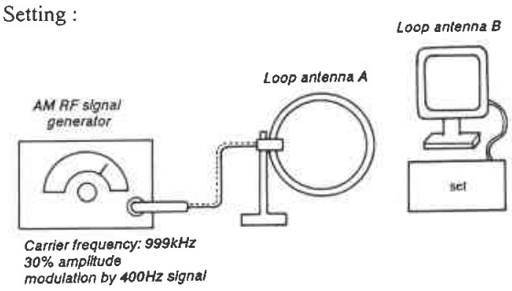

Procedure :

1. Set loop antenna A so that the loop antenna B input level becomes 50.1mV (94dB/m)
2. Tune the set to 999kHz.
3. Adjust the RV23 so that the 5 point segment of the signal meter goes on.

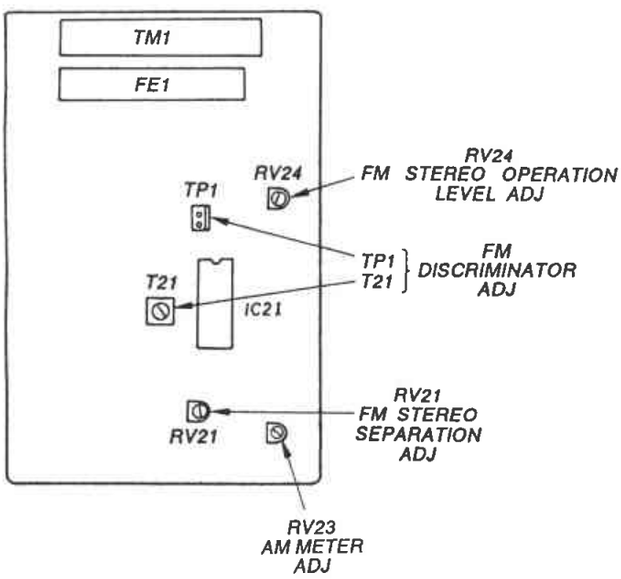

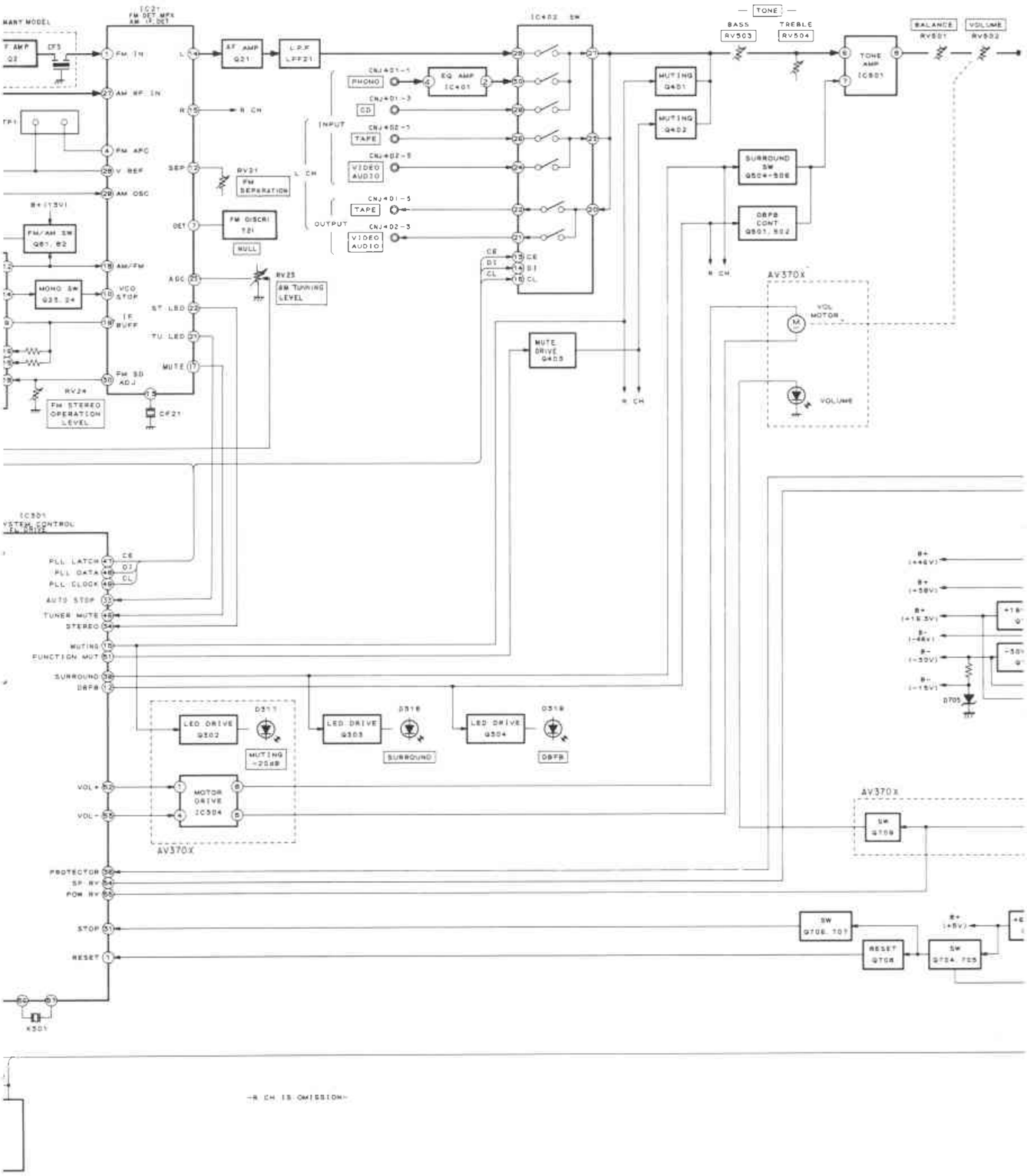
IC2
FM DET MPX
AM IF DET
FM IN
AM RF IN
FM AFC
V REF
AM OSC
AM/FM
VCO STOP
IF BUFF
FM SD ADJ
AF AMP Q21
LPF LPF21
R CH
SEP
RV21
FM SEPERATION
L CH
DET
FM DISCRI T21
NULL
ADC
RV23
AM TUNING LEVEL
ST LED
TU LED
MUTE
RV24
FM STEREO OPERATION LEVEL
CF21
FM/AM SW Q61, 62
MONO SW Q23, 24
IC402 SW
INPUT
OUTPUT
PHONO
CD
TAPE
VIDEO AUDIO
EQ AMP IC401
MUTING Q401
MUTING Q402
SURROUND SW Q504~506
DBFB CONT Q501, 502
MUTE DRIVE Q403
TONE
BASS RV503
TREBLE RV504
TONE AMP IC601
BALANCE RV501
VOLUME RV502
AV370X
VOL MOTOR
VOLUME
IC301
SYSTEM CONTROL
PLL LATCH
PLL DATA
PLL CLOCK
AUTO STOP
TUNER MUTE
STEREO
MUTING
FUNCTION MUT
SURROUND
DBFB
LED DRIVE Q302
D317
MUTING
LED DRIVE Q303
D318
SURROUND
LED DRIVE Q304
D319
DBFB
VOL +
VOL -
MOTOR DRIVE IC304
PROTECTOR
SP RY
POW RY
STOP
RESET
SW Q708, 707
RESET Q706
SW Q704, 705
X301
D705
-R CH IS OMISSION-

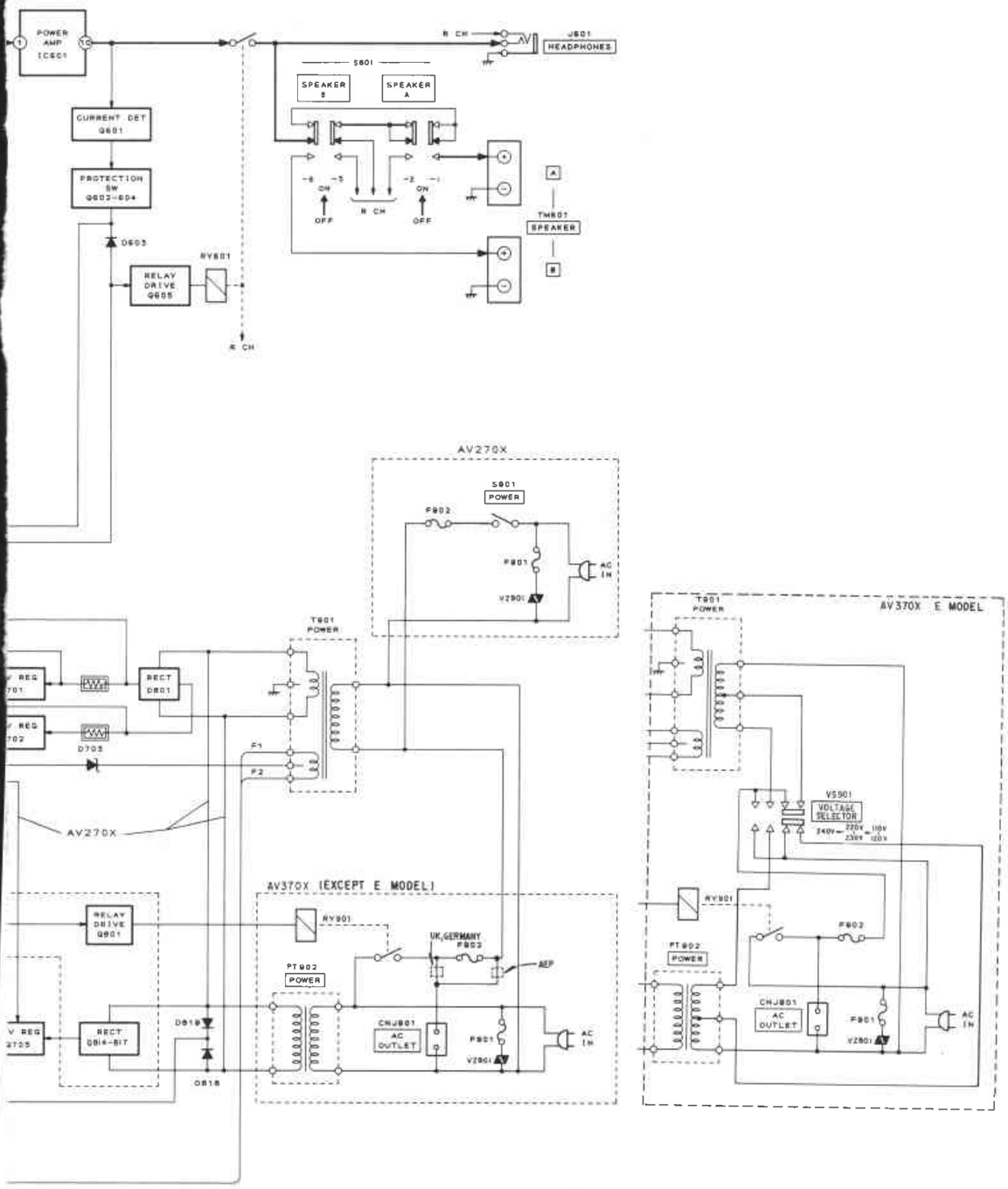
POWER AMP IC601
CURRENT DET Q601
PROTECTION SW Q602-604
D603
RELAY DRIVE Q605
RY601
R CH
R CH
J601 HEADPHONES
S601
SPEAKER B
SPEAKER A
ON
OFF
TM601 SPEAKER
AV270X
S901 POWER
F902
F901
VZ901
AC IN
T901 POWER
RECT D801
D703
F1
F2
AV270X
AV370X (EXCEPT E MODEL)
RELAY DRIVE Q901
RY901
UK,GERMANY F903
AEP
PT902 POWER
CNJ901 AC OUTLET
F901
VZ901
AC IN
RECT D814-817
D818
D817
AV370X E MODEL
T901 POWER
VS901 VOLTAGE SELECTOR
240V 220V 230V 110V 120V
RY901
F902
PT902 POWER
CNJ901 AC OUTLET
F901
VZ901
AC IN

• CIRCUIT BOARDS LOCATION

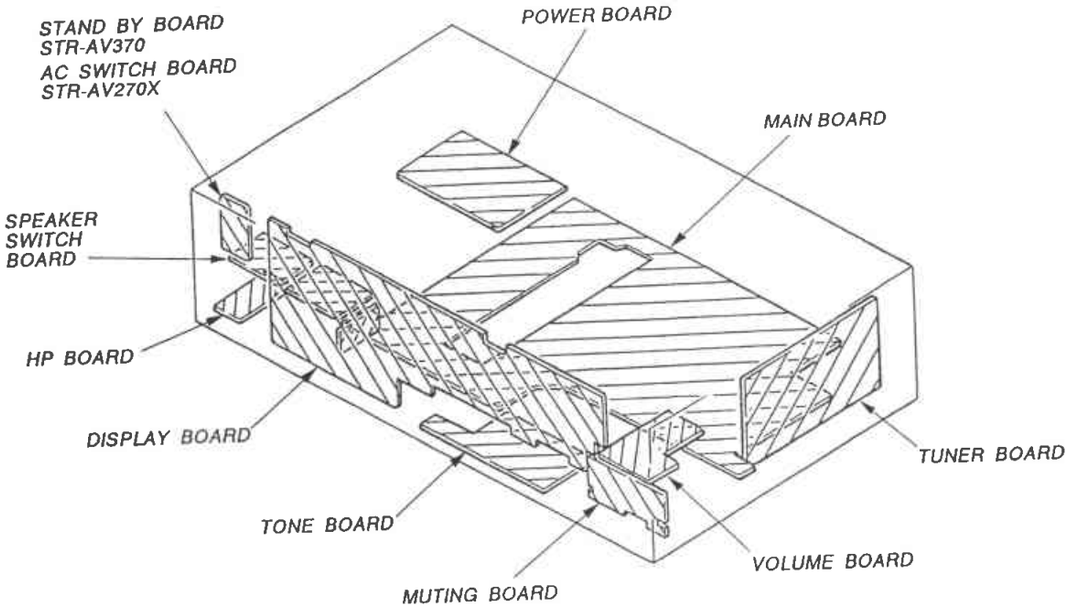

• Semiconductor Lead Layouts

STK4162MK2
STK4192MK2

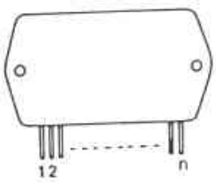

LB1493
μPC4570HA-1

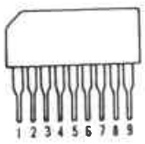

μPD75206GF-715-3BE

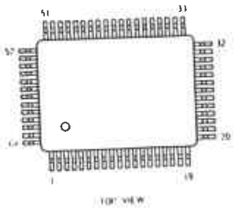

DTA114ES
DTA124ES
DTC114ES
DTC124ES
2SC2603-EF
2SC2669-OY
2SC3623A-LK

2SA988-FA

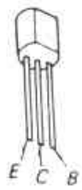

2SA1175-HFE
2SC2785-HFE

2SB734-34

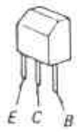

2SC3113-AB

2SD809-K

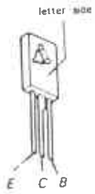

2SD2012

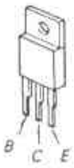

2SK246-GR3

HZS4ALL
HZS6C3L
RD27ESB2
UZ-4.3BSB
UZ-6.2BSC
UZ-15BSB
UZ-16BSB
1N4148M
11ES2

RBA-402

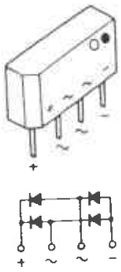

SEL3810A-C

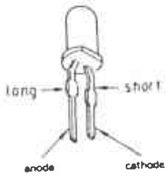

3-2. PRINTED WIRING BOARDS

– MAIN SECTION –

• Semiconductor Location

Ref. No.	Location	Ref. No.	Location
D301	D-3	IC301	E-8
D302	D-3	IC302	E-3
D303	D-3	IC303	E-6
D304	D-3	IC304	E-13
D305	D-3	IC401	C-17
D306	D-3	IC402	C-18
D307	D-3	IC501	I-6
D308	D-4	IC601	F-23
D309	D-4		
D311	F-13	Q301	E-2
D312	F-12	Q302	B-10
D313	F-7	Q303	B-11
D314	F-11	Q304	B-10
D315	F-11	Q305	D-11
D316	E-3	Q306	D-11
D317	B-10	Q307	D-11
D318	B-11	Q401	C-20
D319	B-9	Q402	D-20
D322	D-4	Q403	C-20
D323	D-4	Q451	C-20
D324	D-4	Q452	D-20
D326	D-12	Q501	I-7
D327	D-11	Q502	J-7
D328	F-11	Q504	I-7
D401	C-22	Q505	J-7
D402	C-22	Q506	J-7
D403	H-19	Q551	I-7
D502	J-6	Q552	I-8
D601	G-20	Q601	G-20
D602	K-22	Q602	G-20
D603	H-20	Q603	H-20
D604	H-19	Q604	H-20
D605	G-16	Q605	H-21
D651	G-20	Q651	G-20
D702	E-17	Q701	F-17
D703	G-17	Q702	E-18
D704	E-19	Q703	B-23
D705	E-18	Q704	B-23
D706	B-23	Q705	B-23
D707	B-24	Q706	B-22
D708	B-23	Q707	B-22
D709	B-22	Q708	B-22
D801	D-22	Q709	H-18
D803	C-23	Q801	C-22
D814	C-23		
D815	C-23		
D816	C-22		
D817	C-23		
D818	C-23		
D819	C-23		

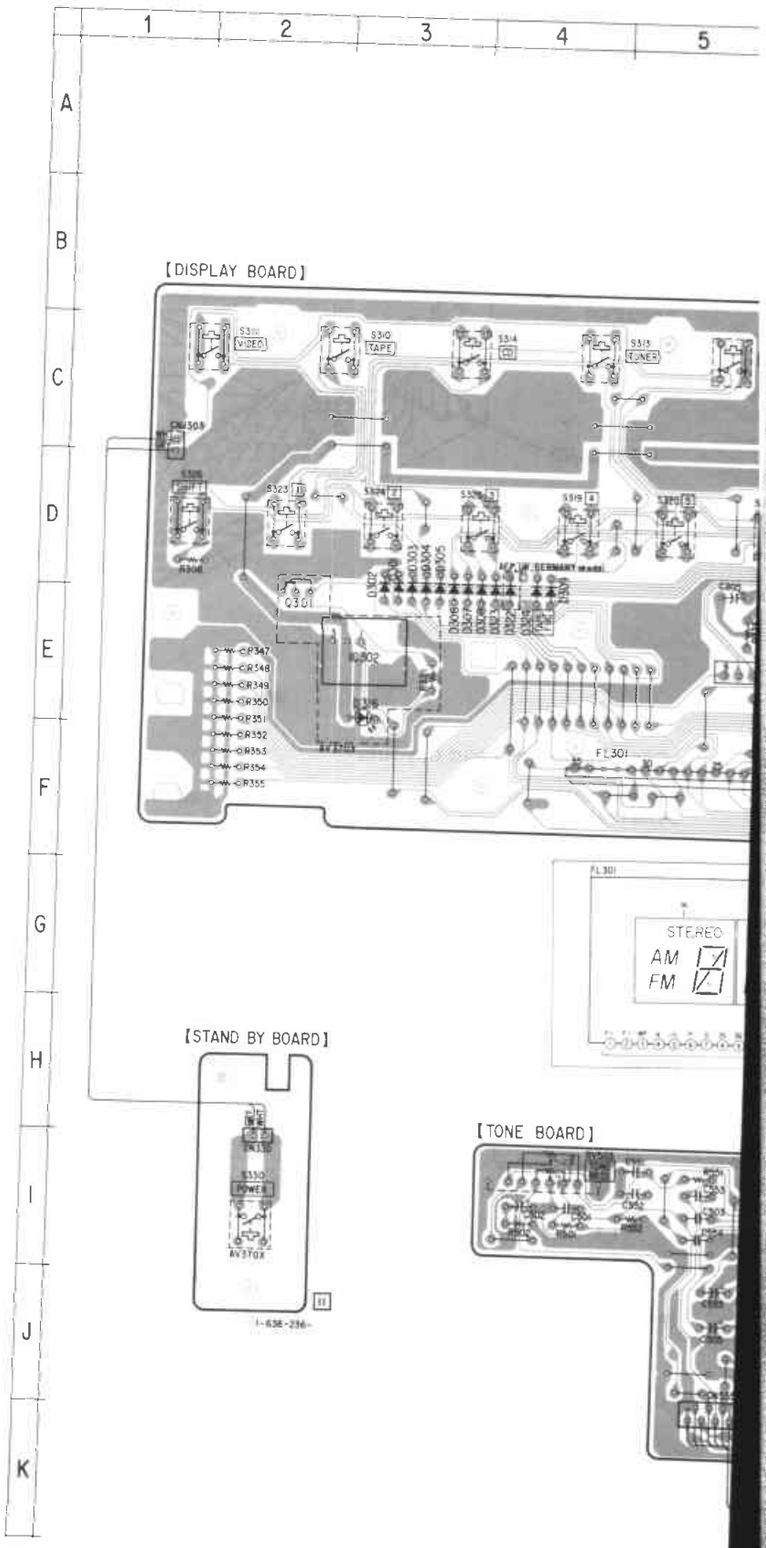

Note:

- ○——— : parts extracted from the component side.
- ■ : parts mounted on the conductor side.
- ⊡← : indicates side identified with part number.
- ∗, ∗A, ∗B: See page 6 for Note on Ceramic Filter (CF1, 2, 3) Replacement.

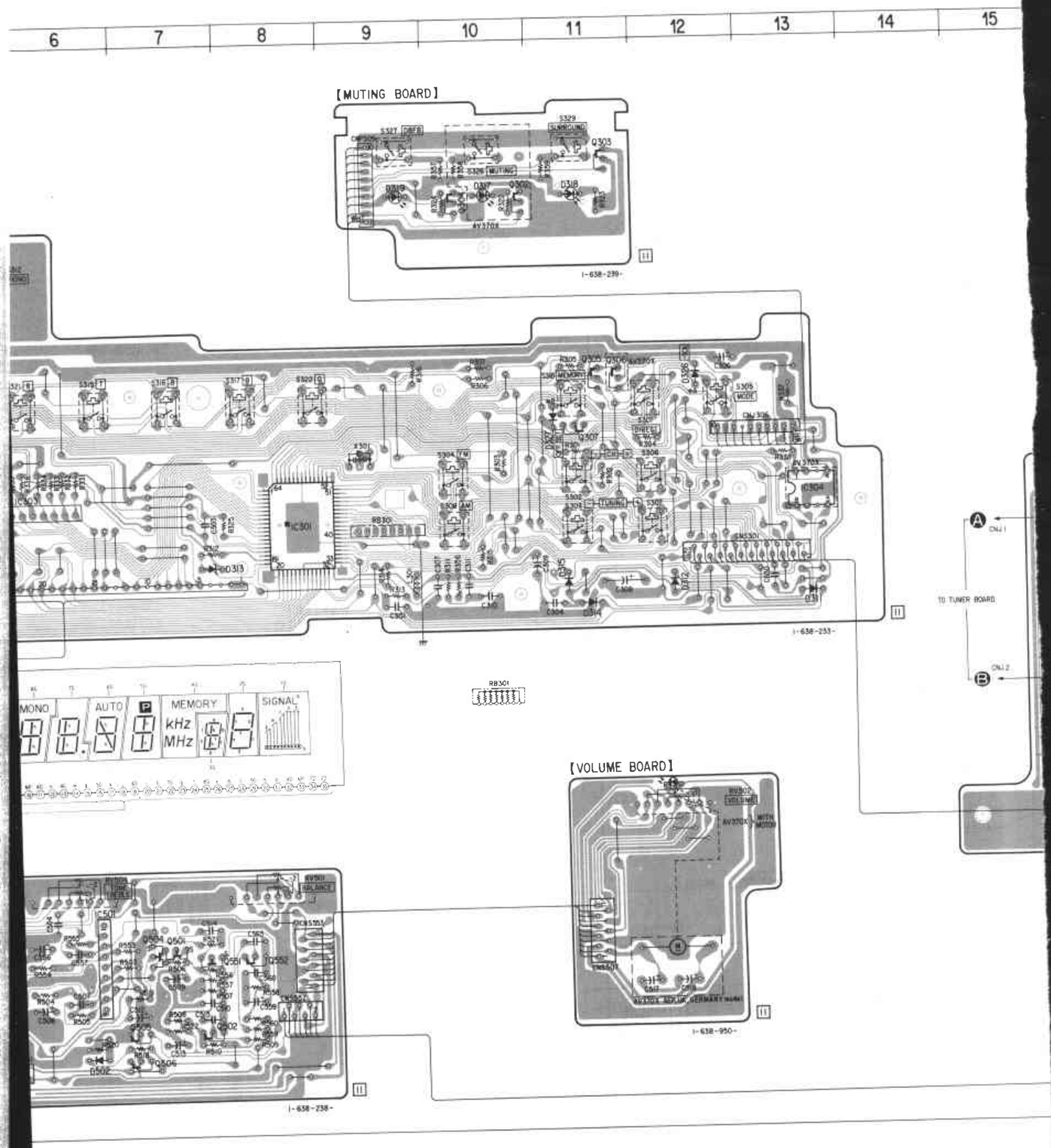
6
7
8
9
10
11
12
13
14
15
【MUTING BOARD】
1-638-239-
1-638-253-
TO TUNER BOARD
MONO
AUTO
MEMORY
kHz
MHz
SIGNAL
RB301
【VOLUME BOARD】
1-638-950-
1-638-238-

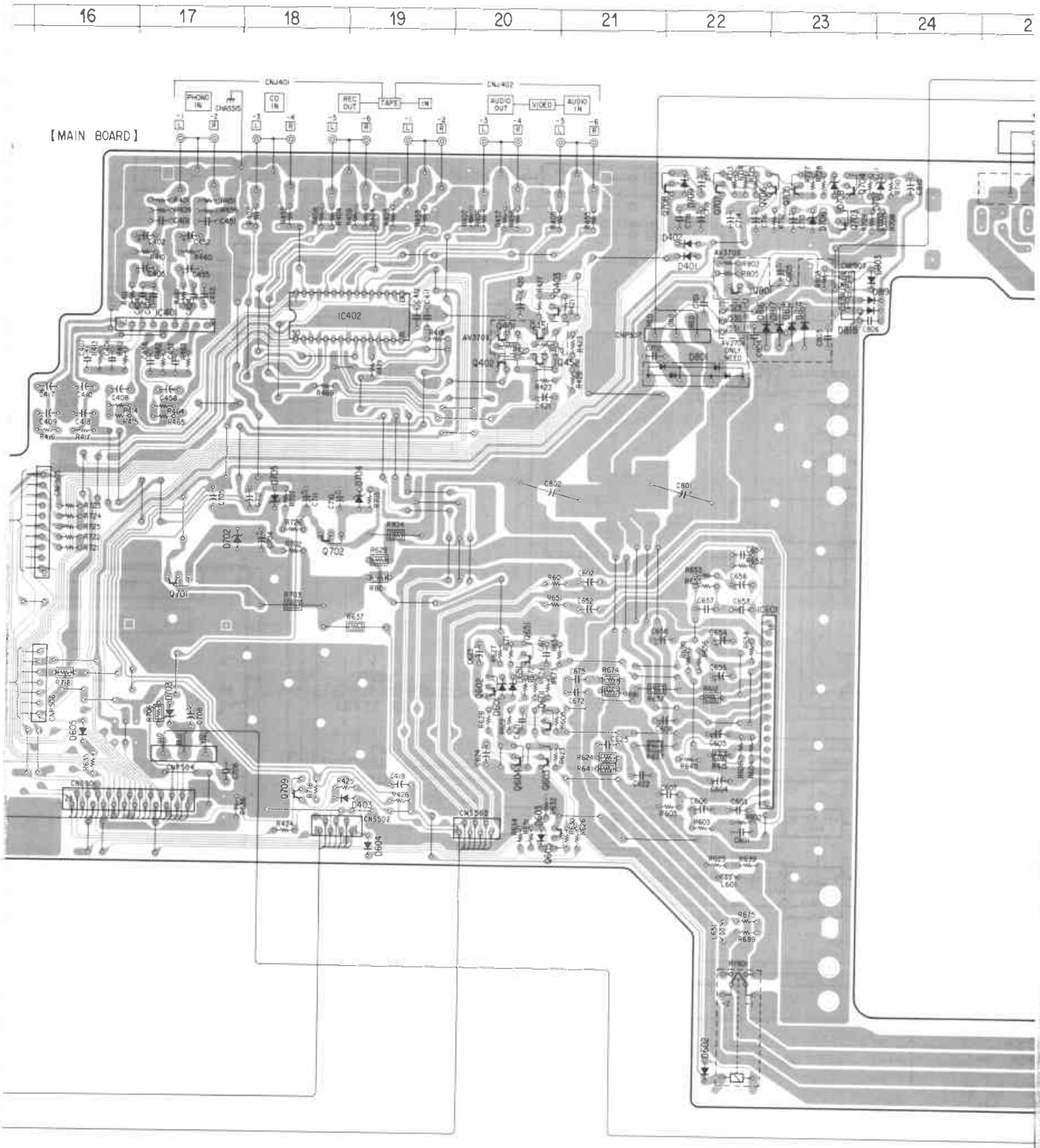
16
17
18
19
20
21
22
23
24
2
[MAIN BOARD]
CNJ401
CNJ402
PHONO IN
CHASSIS
CD IN
REC OUT
TAPE
IN
AUDIO OUT
VIDEO
AUDIO IN
IC402
IC401
Q702
Q701
Q709
D403
D604
D605
D401
D801
D802
IC601
CN5502
CN5503
CN5504
CN5506
CNP506
CNP507
CNP508

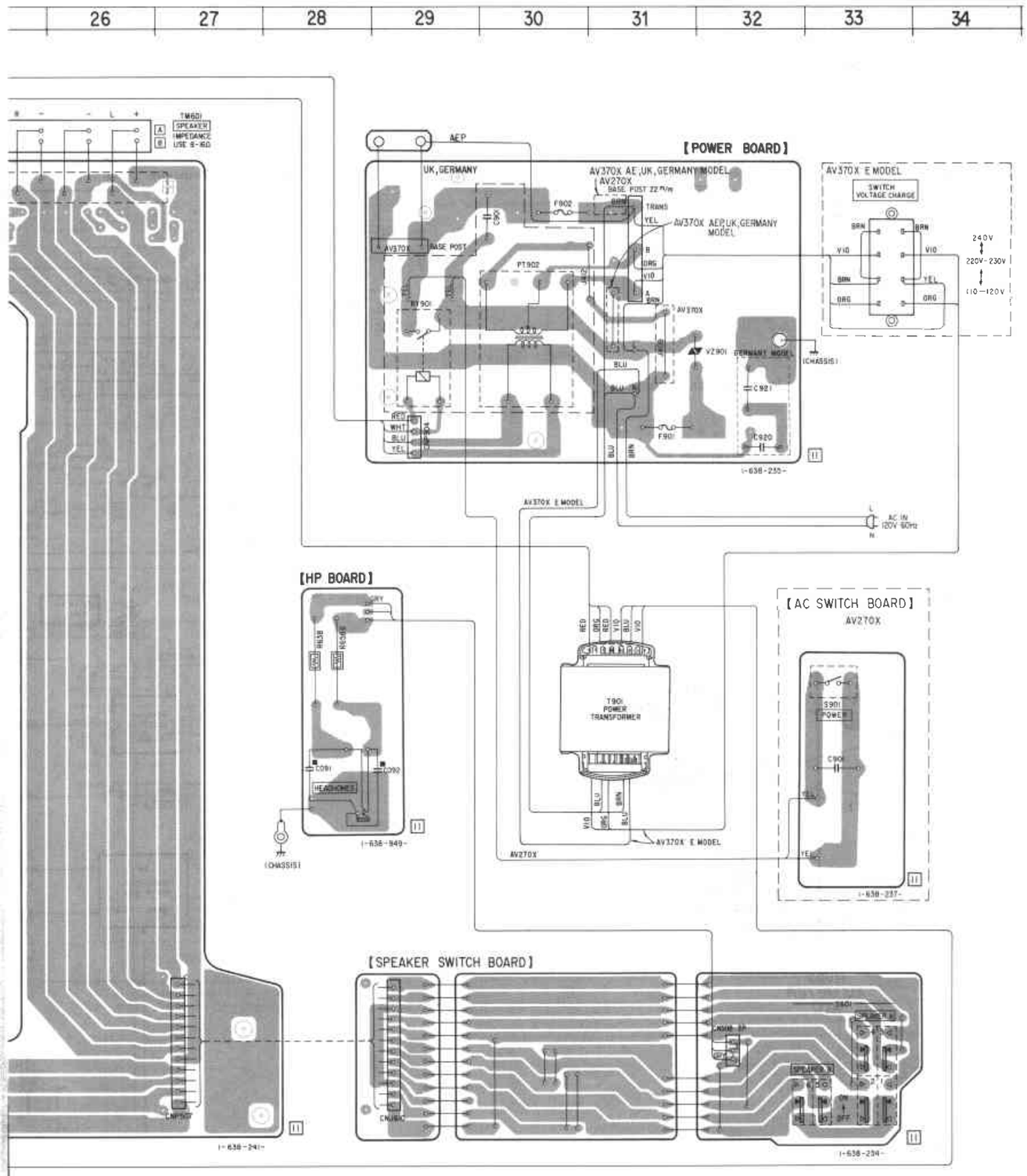
26
27
28
29
30
31
32
33
34
【POWER BOARD】
AEP
UK,GERMANY
AV370X AE,UK,GERMANY MODEL
AV270X
AV370X AEP,UK,GERMANY MODEL
AV370X E MODEL
SWITCH VOLTAGE CHARGE
240V
220V-230V
110-120V
(CHASSIS)
AC IN 120V 60Hz
【HP BOARD】
HEADPHONES
【AC SWITCH BOARD】
AV270X
POWER
T901 POWER TRANSFORMER
【SPEAKER SWITCH BOARD】
TM601 SPEAKER IMPEDANCE USE 6-16Ω

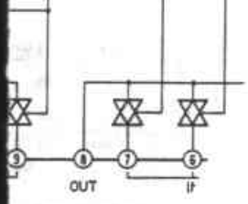
OUT
IF

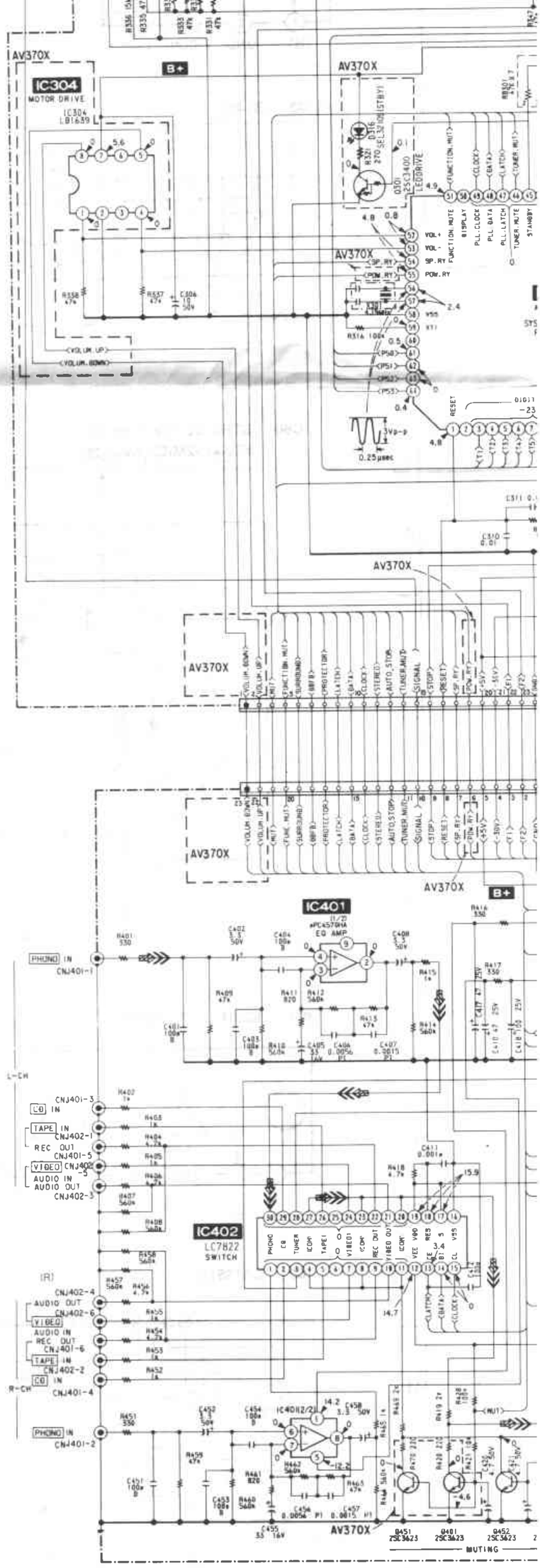
IC304
MOTOR DRIVE
IC401
EQ AMP
IC402
LC7822
SWITCH
AV370X
B+
PHONO IN
CD IN
TAPE IN
REC OUT
VIDEO
AUDIO IN
AUDIO OUT
L-CH
R-CH
MUTING

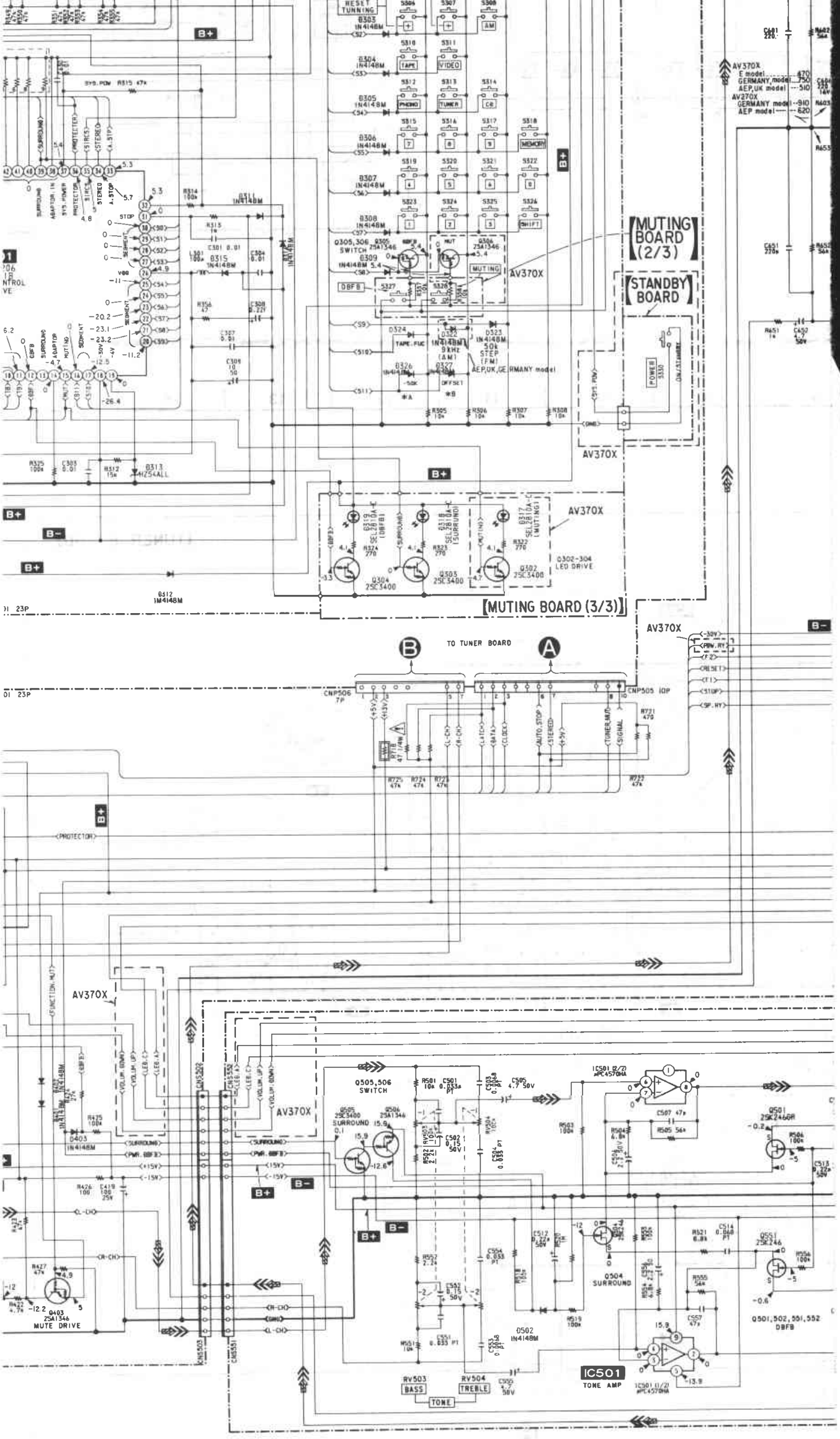
MUTING BOARD (2/3)
STANDBY BOARD
MUTING BOARD (3/3)
AV370X
TO TUNER BOARD
CNP506 7P
CNP505 10P
Q505,506 SWITCH
Q505 2SC3400 SURROUND
Q506 2SA1346
Q403 2SA1346 MUTE DRIVE
Q504 SURROUND
Q501,502,551,552 DBFB
IC501 TONE AMP
RV503 BASS
RV504 TREBLE
TONE
Q502 1N4148M
Q501 2SK246GR
Q551 2SK246
Q302-304 LED DRIVE
Q304 2SC3400
Q303 2SC3400
Q502 2SC3400
Q312 1N4148M
Q313 HZ54ALL
Q315 1N4148M
Q403 1N4148M
Q324 TAPE.FUC
Q326 -50K
Q327 OFFSET
Q322 9KHZ (AM)
Q323 50K STEP (FM)
AEP,UK,GERMANY model
AV370X E model 470 GERMANY,model 750 AEP,UK model 510
AV370X GERMANY model 910 AEP model 620
B+
B-

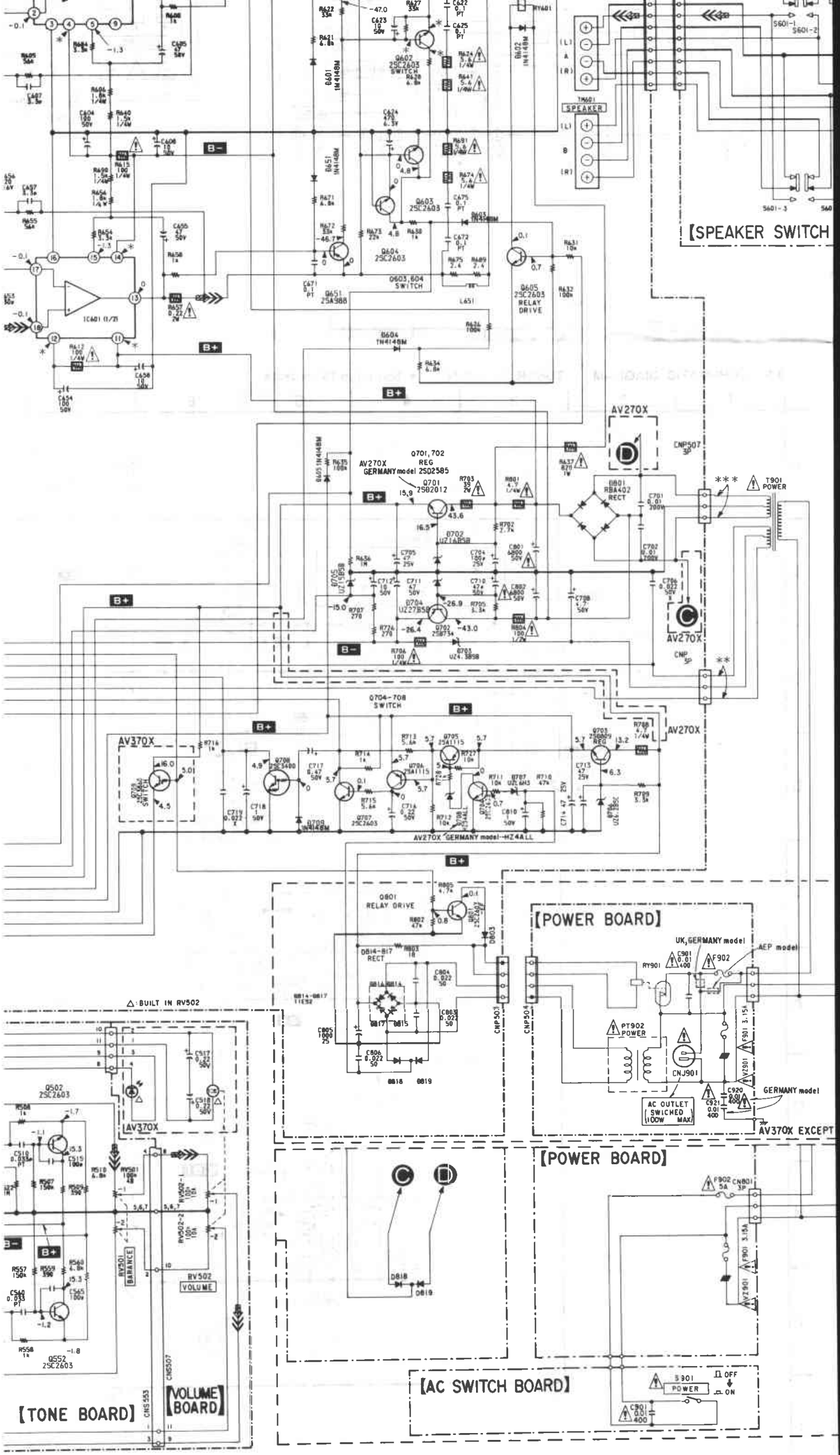
【SPEAKER SWITCH
SPEAKER
AV270X
AV370X
AV270X GERMANY model 2SD2585
Q701, 702 REG
Q704-708 SWITCH
AV270X GERMANY model--HZ4ALL
T901 POWER
△:BUILT IN RV502
【POWER BOARD】
UK, GERMANY model
AEP model
GERMANY model
AV370X EXCEPT
AC OUTLET (SWICHED 100W MAX)
【AC SWITCH BOARD】
【TONE BOARD】
【VOLUME BOARD】
RV501 BALANCE
RV502 VOLUME

3-4. PRINTED WIRING BOARDS – TUNER SECTION – • See page 11 for Note.

• **Semiconductor Location**

Ref. No.	Location	Ref. No.	Location
IC21	I-3	Q23	I-5
IC81	F-7	Q24	I-5
		Q81	H-6
Q1	F-5	Q82	H-6
Q2	F-4	Q83	H-6
Q21	M-6	Q84	F-6
Q22	M-6		

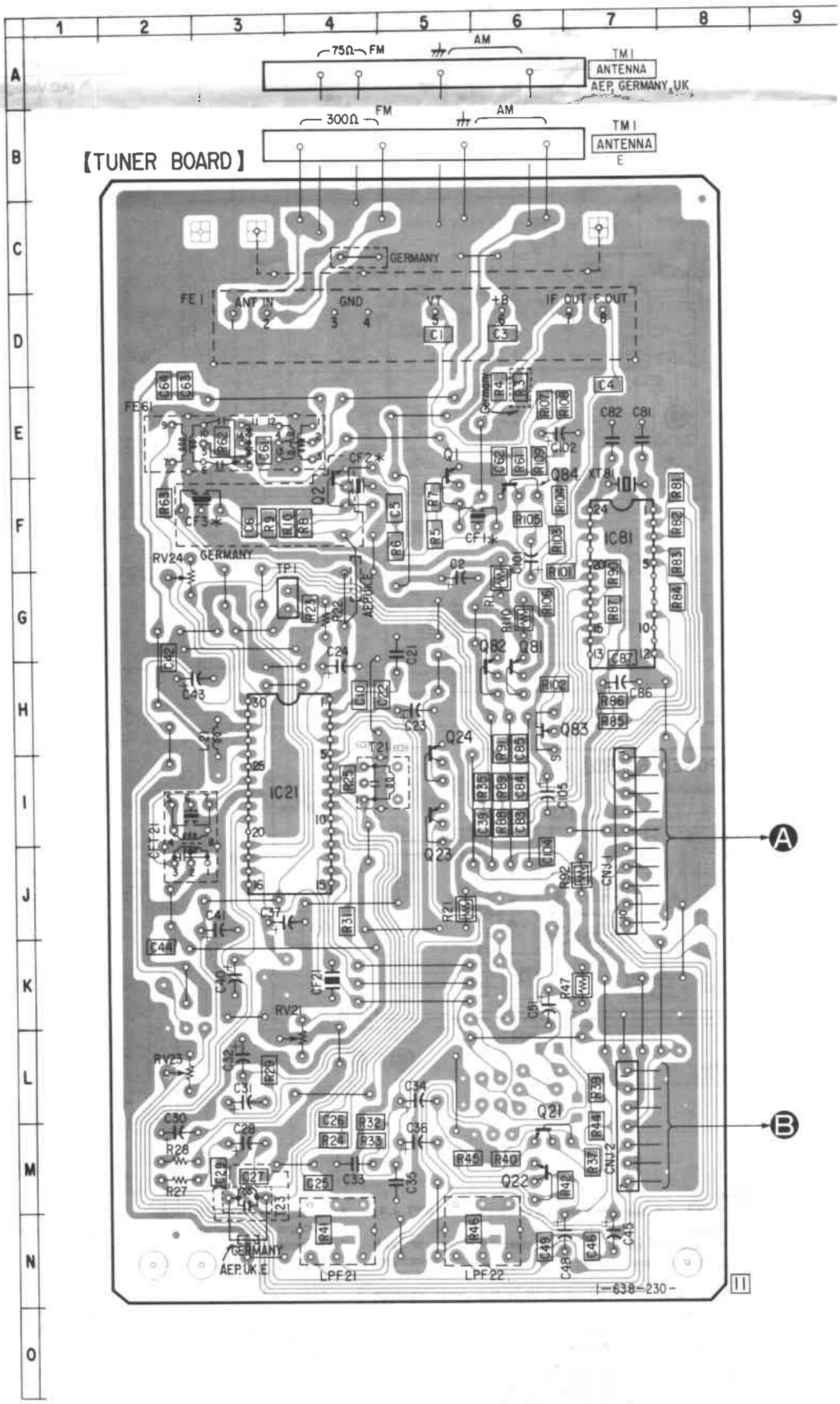

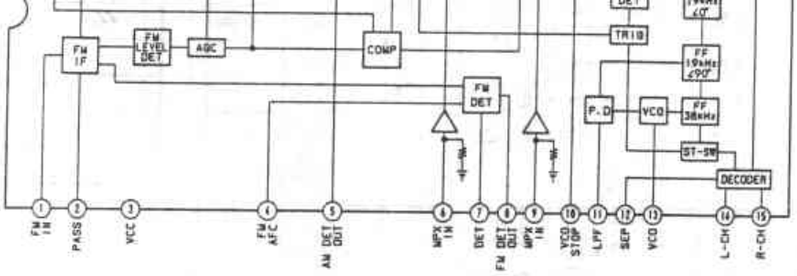

3-5. SCHEMATIC DIAGRAM – TUNER SECTION – • See page 18 for Note.

	Germany	AEP,UK,E
R3	330	
R4	330	33
R5	330	33

FE1 FM FRONT END

Q1 2SC2669 IF AMP

E model

TM1 ANTENNA

4P PUSH

AEP, UK, GERMANY model

AEP, UK, E model

GERMANY model

FE61

IC81 LC7218 PLL

Q83 2SK246GR3 LPF

Q84 2SC3113-AB LPF

CN1 10P

LATCH
DATA
CLOCK
NC
GND
AUTO STOP
STEREO
TUNER MUTE

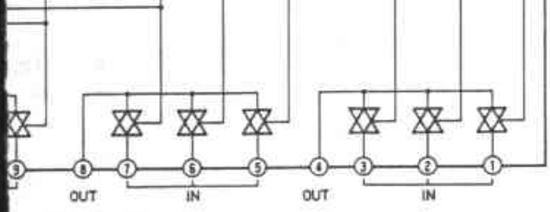

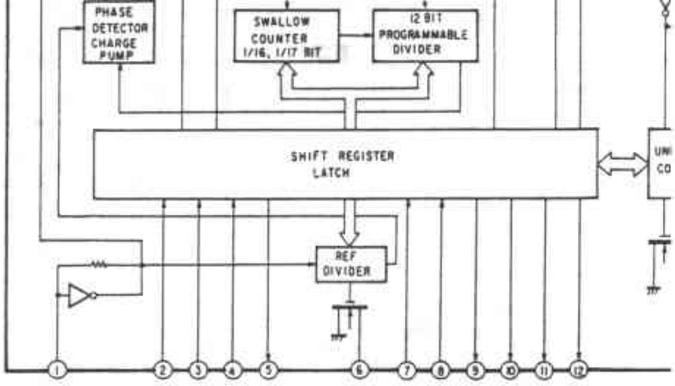

8 | 9 | 10 | 11 | 12 | 13 | 14 | 15

[TUNER BOARD]

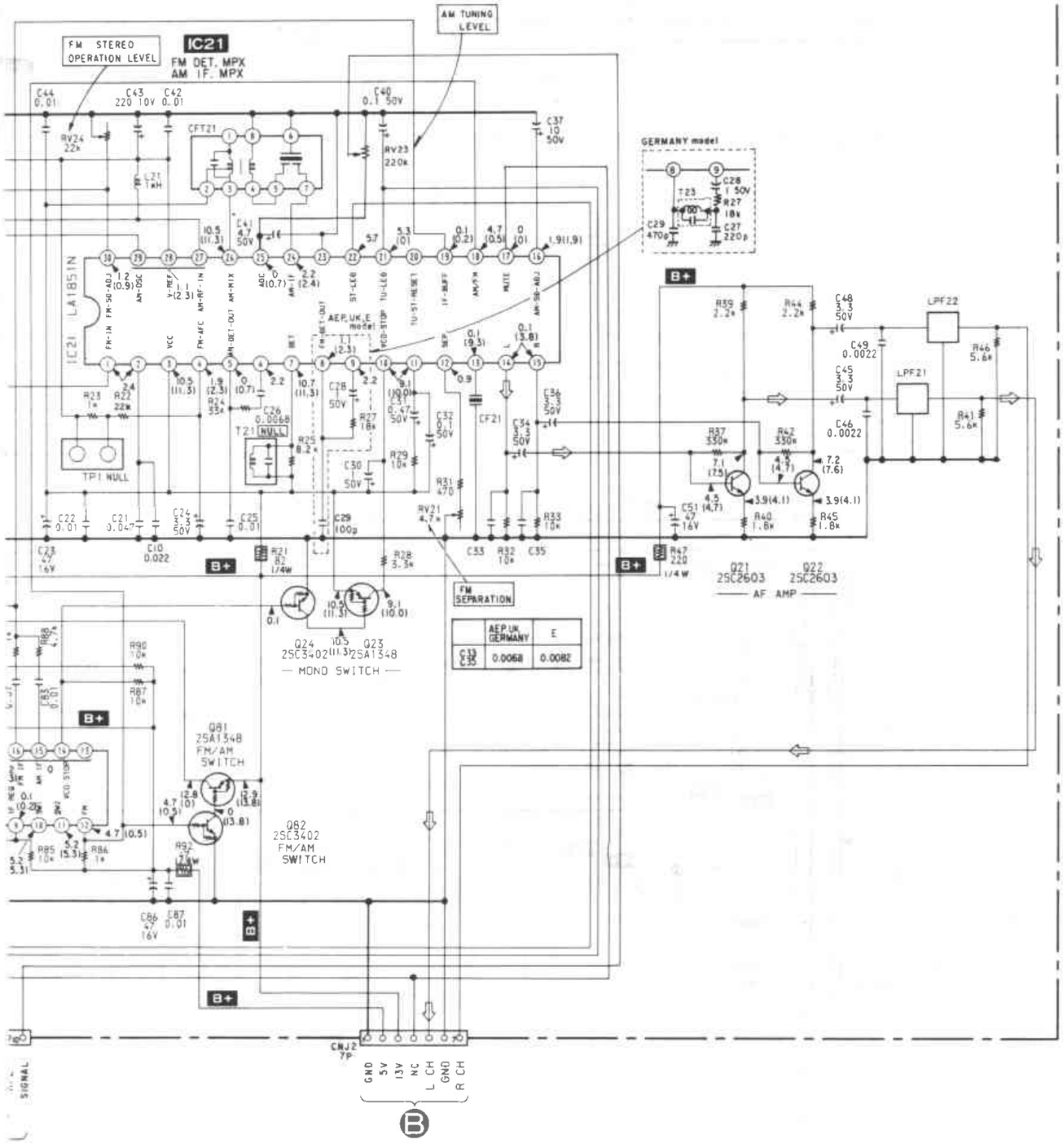

	AEP,UK GERMANY	E
C33 C35	0.0068	0.0082

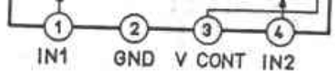

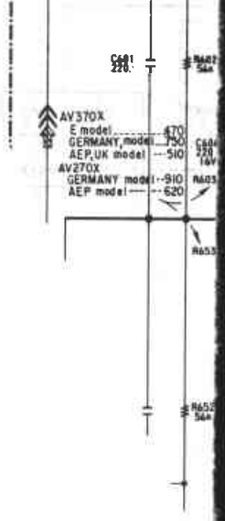

IC303 LB1493

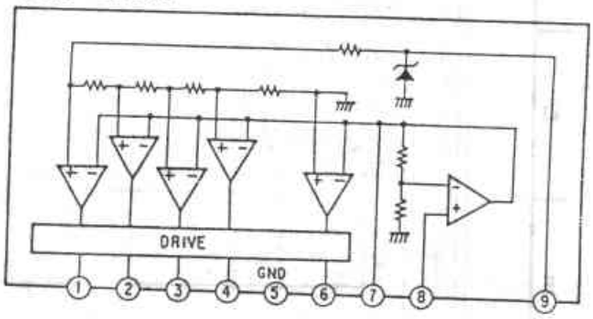

16

IC601 STR4162MK2 (AV270X)
STK4192MK2 (AV370X)

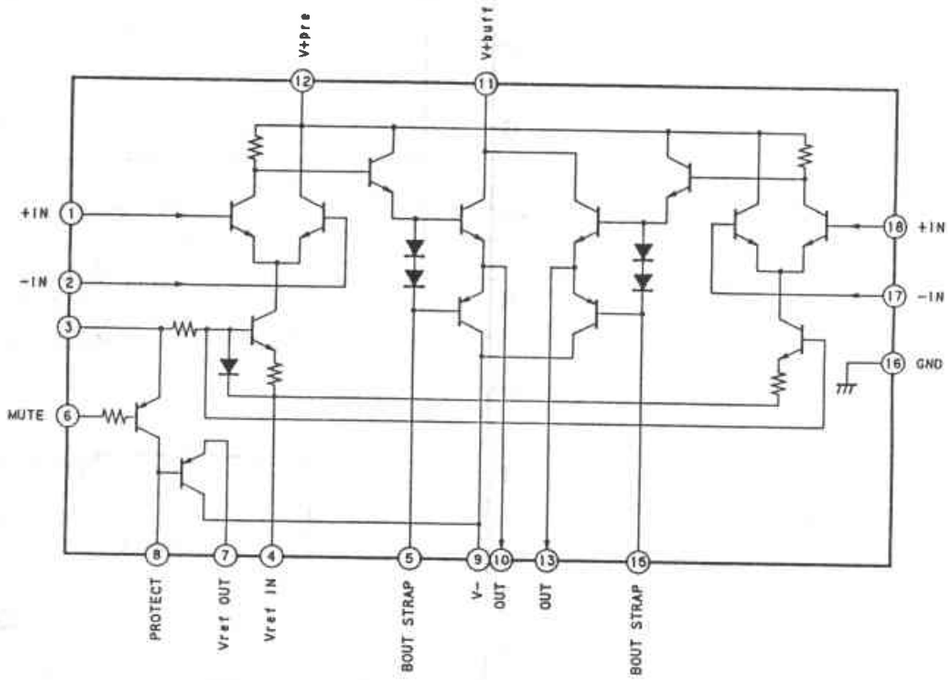

IC401, IC501 μPC4570HA

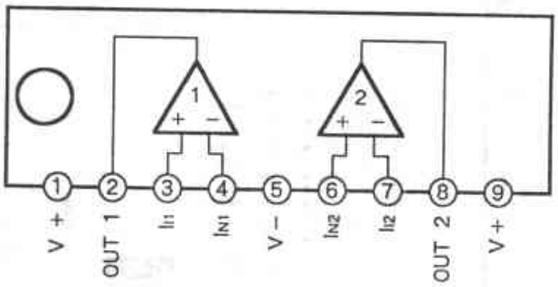

IC21 LA1851N

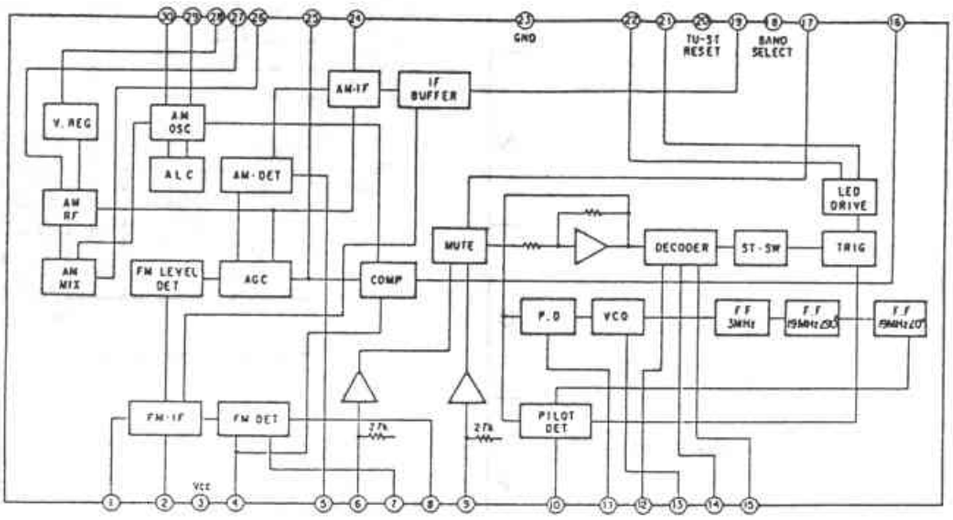

• IC BLOCK DIAGRAMS

IC301 μPD75206

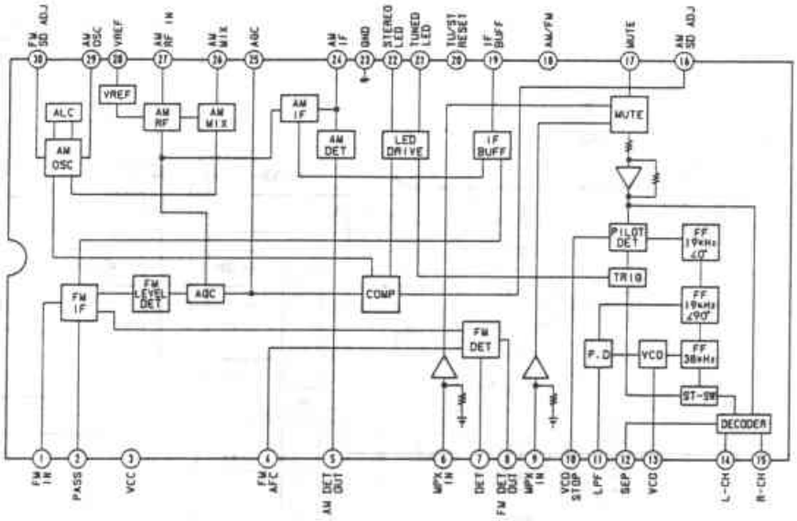

IC402 LC7822

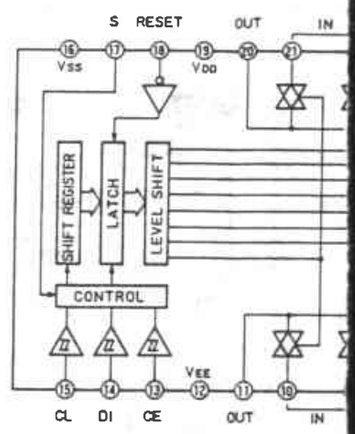

3-5. SCHEMATIC DIAGRAM – TUNER SECTION – • See page 18 for Note.

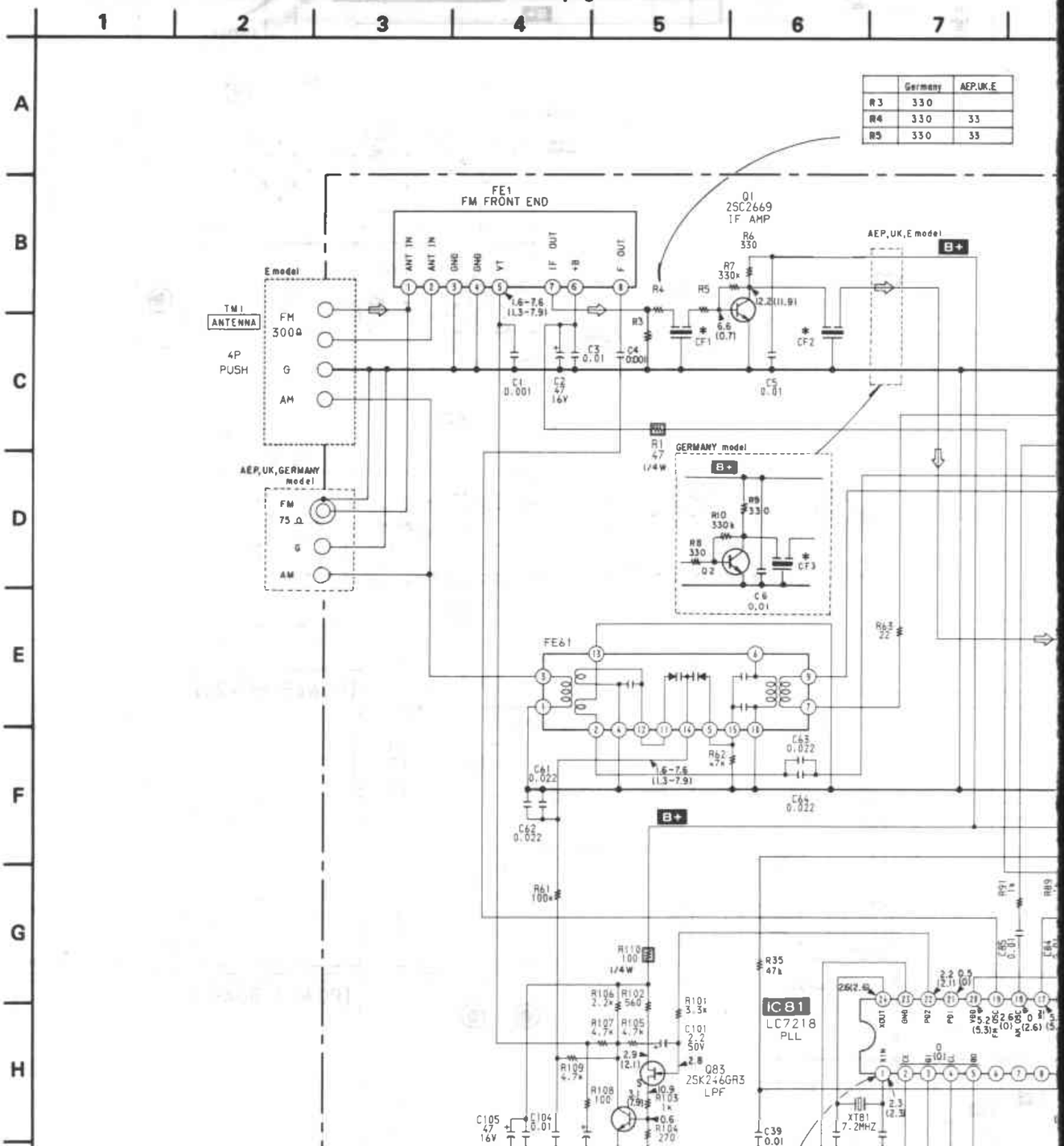

	Germany	AEP,UK,E
R3	330	
R4	330	33
R5	330	33

3-4. PRINTED WIRING BOARDS – TUNER SECTION – • See page 11 for Note.

• **Semiconductor Location**

Ref. No.	Location	Ref. No.	Location
IC21	I-3	Q23	I-5
IC81	F-7	Q24	I-5
		Q81	H-6
Q1	F-5	Q82	H-6
Q2	F-4	Q83	H-6
Q21	M-6	Q84	F-6
Q22	M-6		

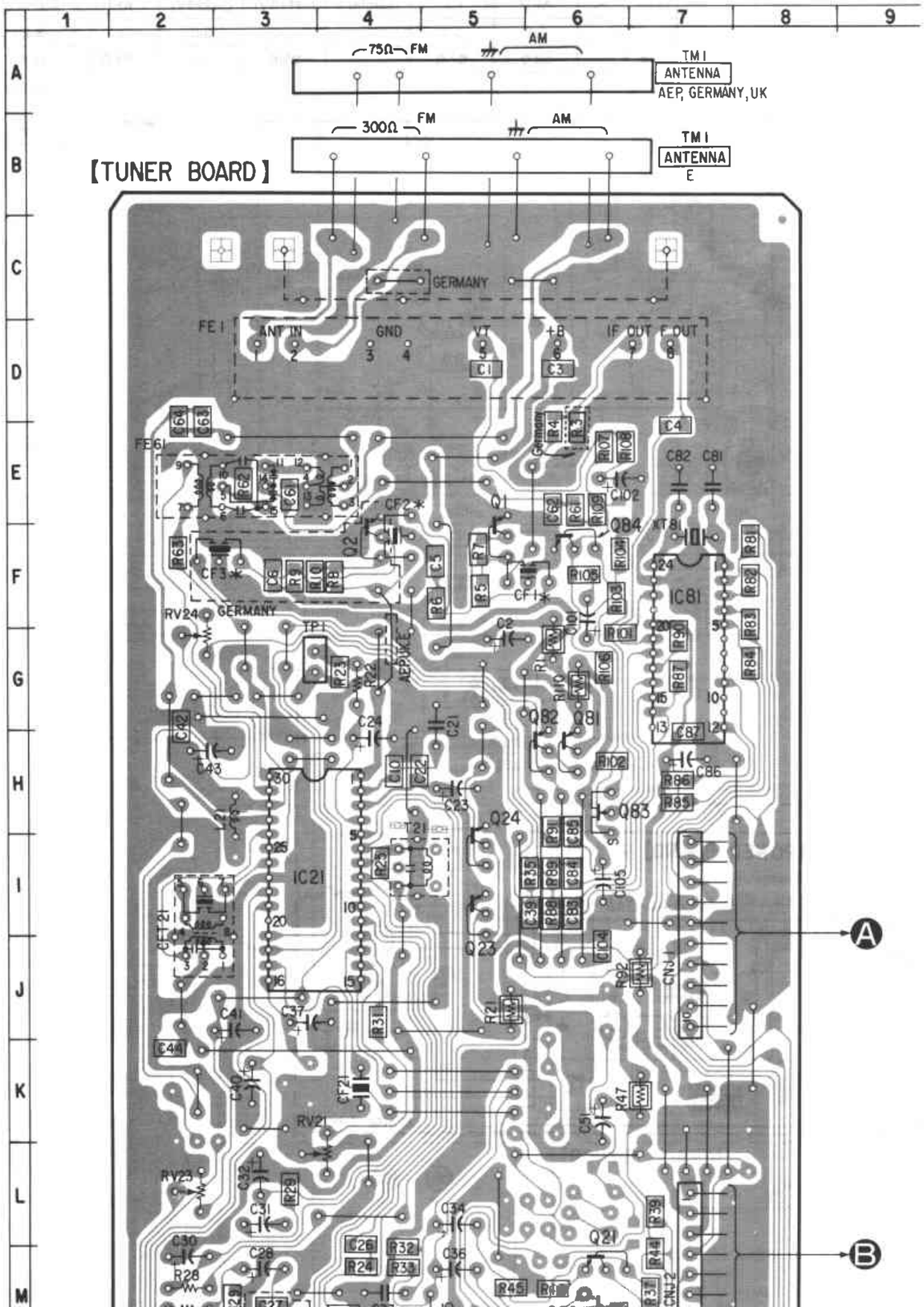

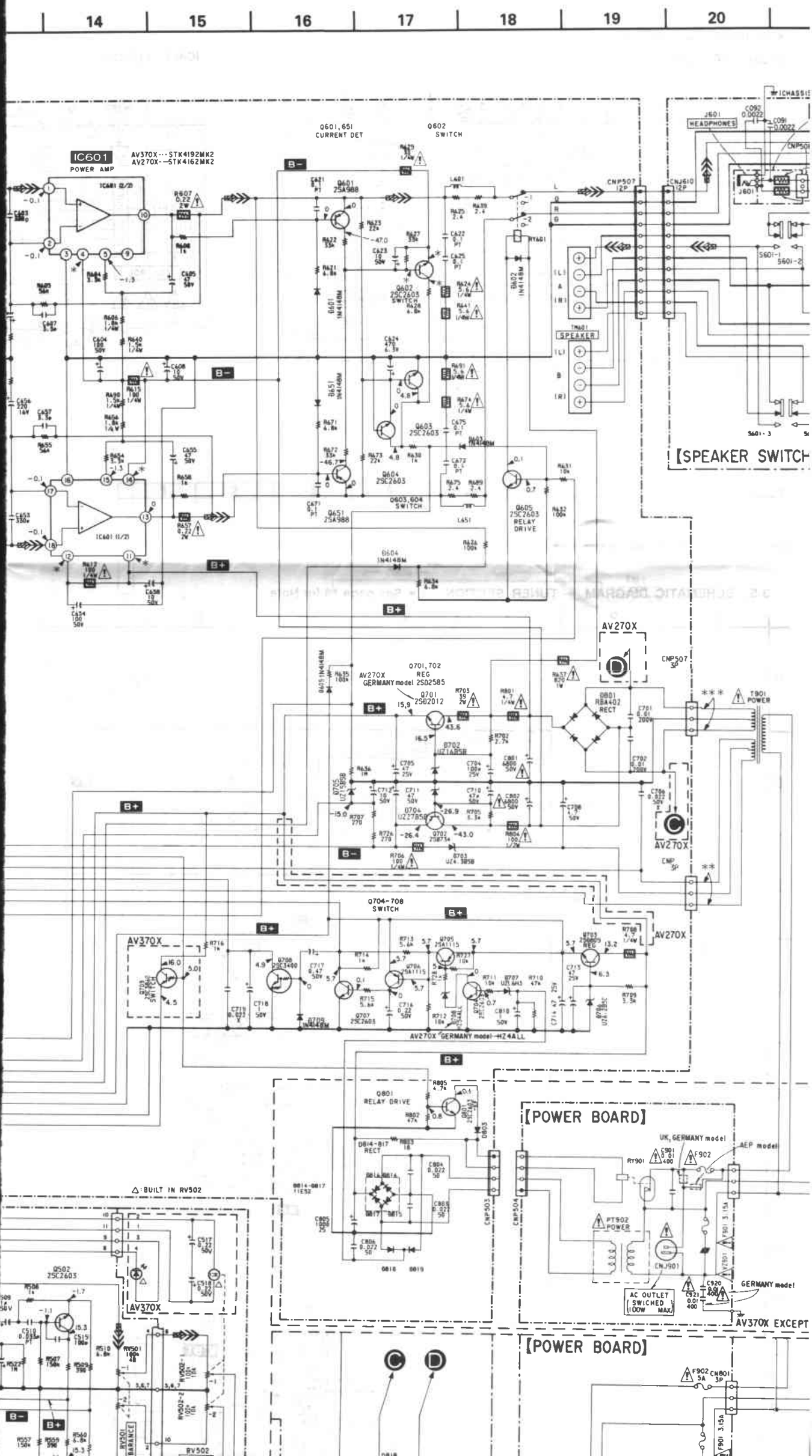
14
15
16
17
18
19
20
IC601
POWER AMP
AV370X---STK4192MK2
AV270X---STK4162MK2
Q601,651
CURRENT DET
Q602
SWITCH
Q603,604
SWITCH
Q604
2SC2603
Q605
2SC2603
RELAY DRIVE
Q701,702
REG
AV270X
GERMANY model 2SD2585
Q704-708
SWITCH
AV370X
AV270X GERMANY model-HZ4ALL
Q801
RELAY DRIVE
△:BUILT IN RV502
Q502
2SC2603
AV370X
RV501
BALANCE
RV502
HEADPHONES
SPEAKER
【SPEAKER SWITCH
【POWER BOARD】
UK, GERMANY model
AEP model
GERMANY model
AC OUTLET
SWICHED
100W MAX
AV370X EXCEPT
【POWER BOARD】
CNP503
CNP504
CNP507
CNP507 3P
T901
POWER
B-
B+

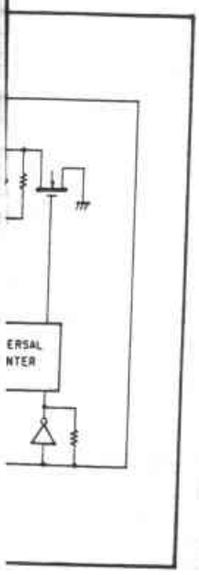

IC304 LB1639

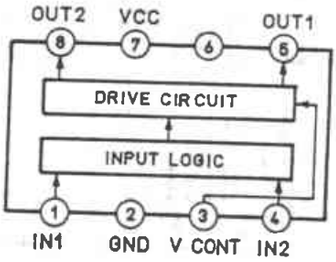

IC303 LB1493

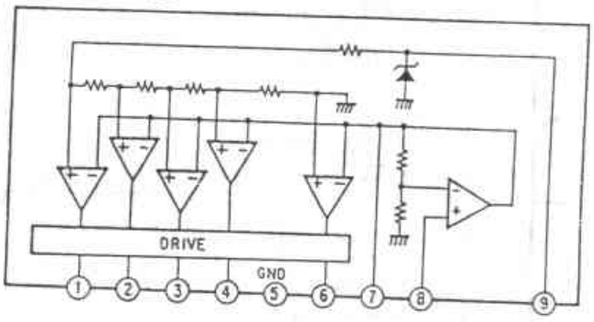

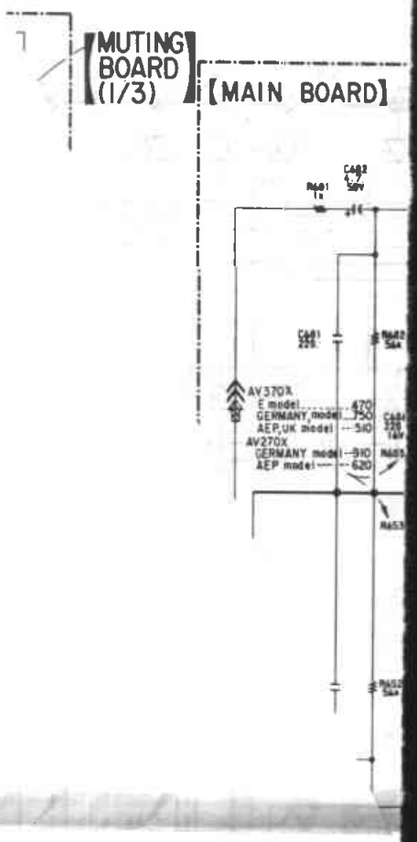

IC601 STR4162MK2 (AV270X)
STK4192MK2 (AV370X)

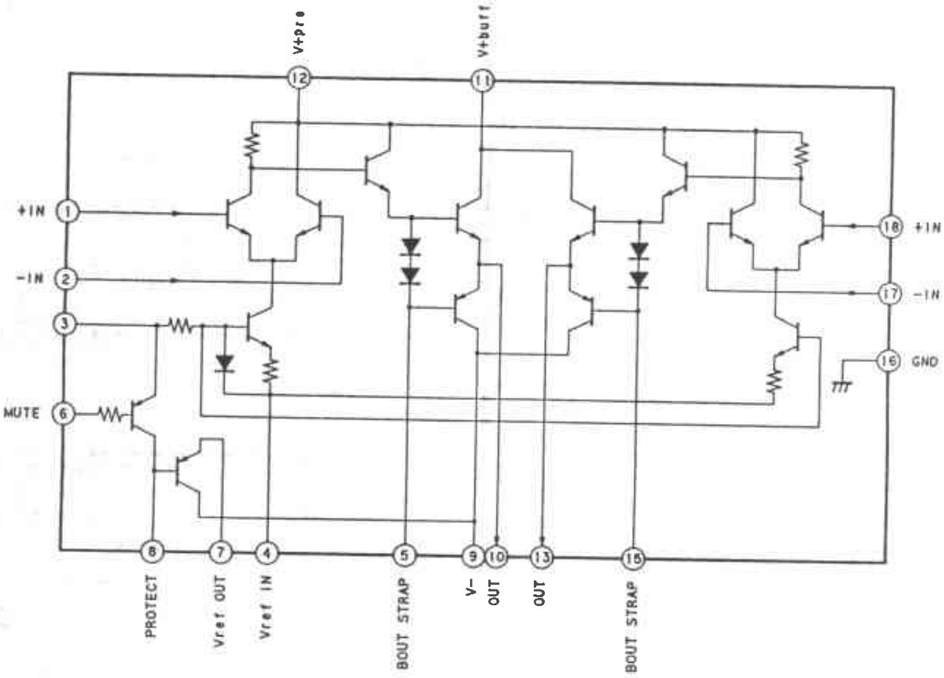

IC401, IC501 μPC4570HA

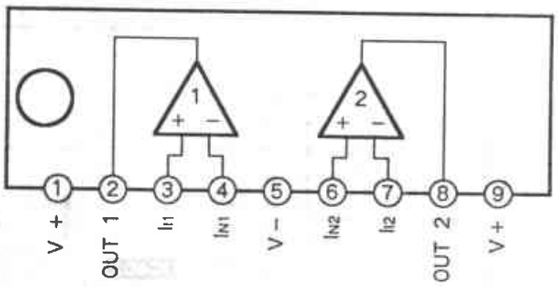

IC21 LA1851N

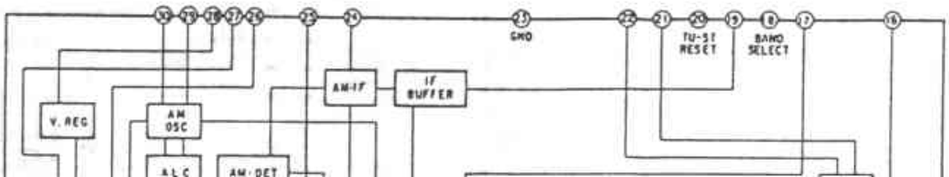

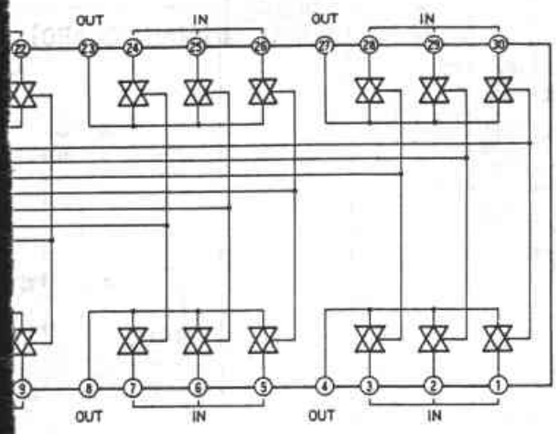

IC81 LC7218

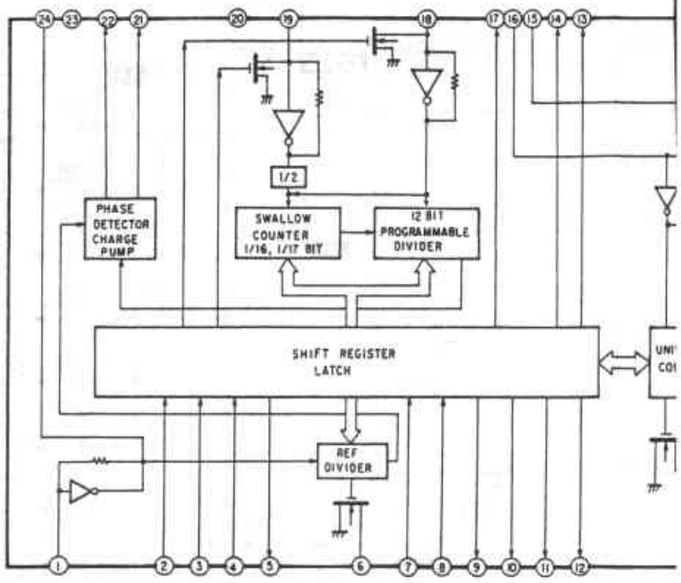

8	9	10	11	12	13	14	15

[TUNER BOARD]

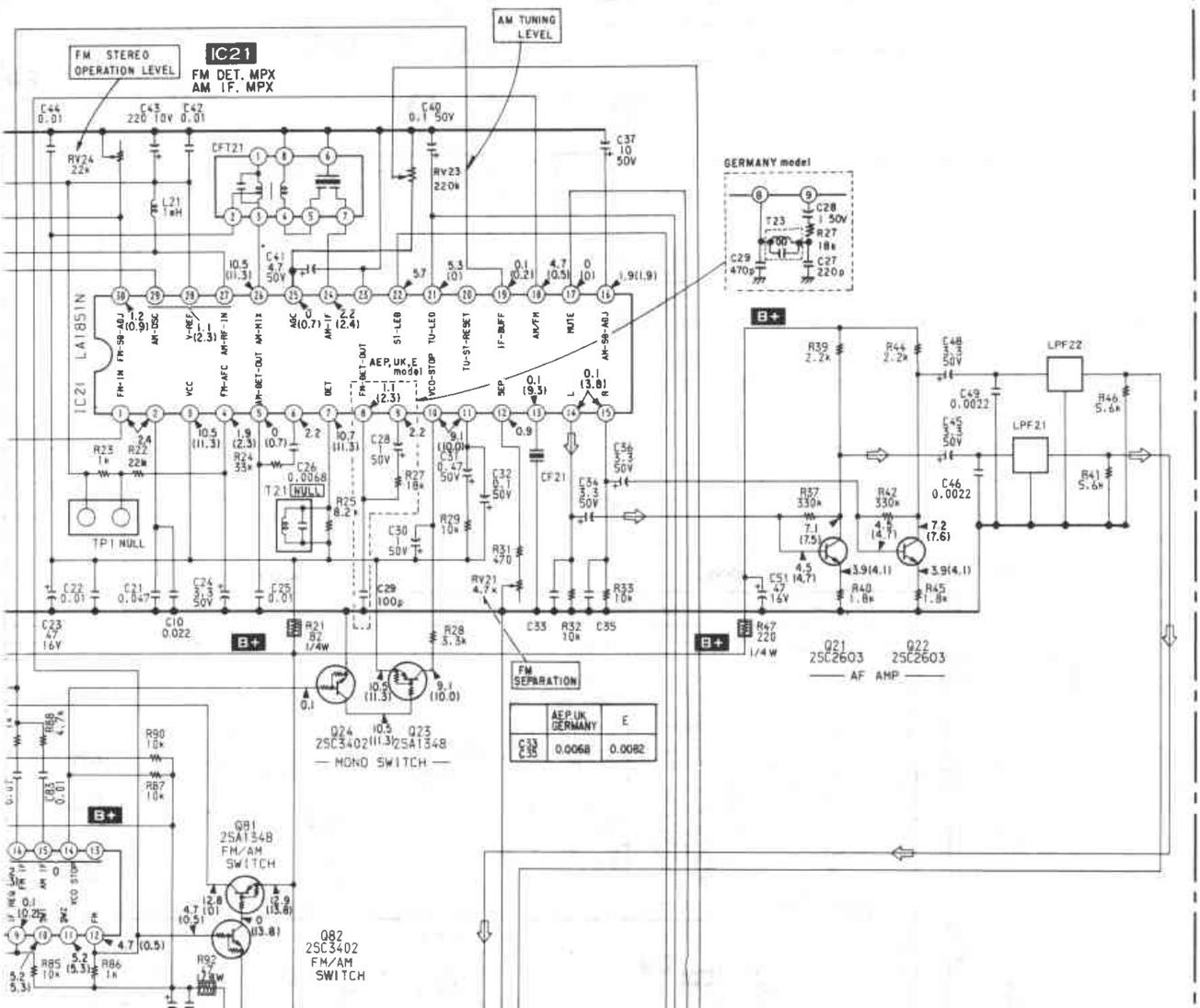

	AEP UK GERMANY	E
C33 C35	0.0068	0.0082

3-3. SCHEMATIC DIAGRAM – MAIN SECTION –

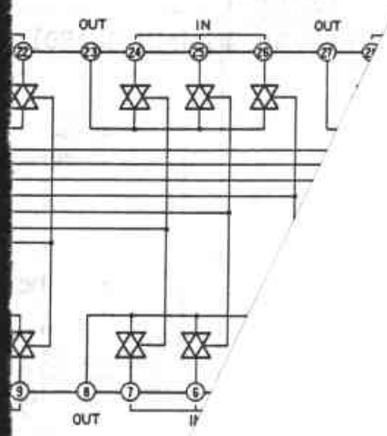

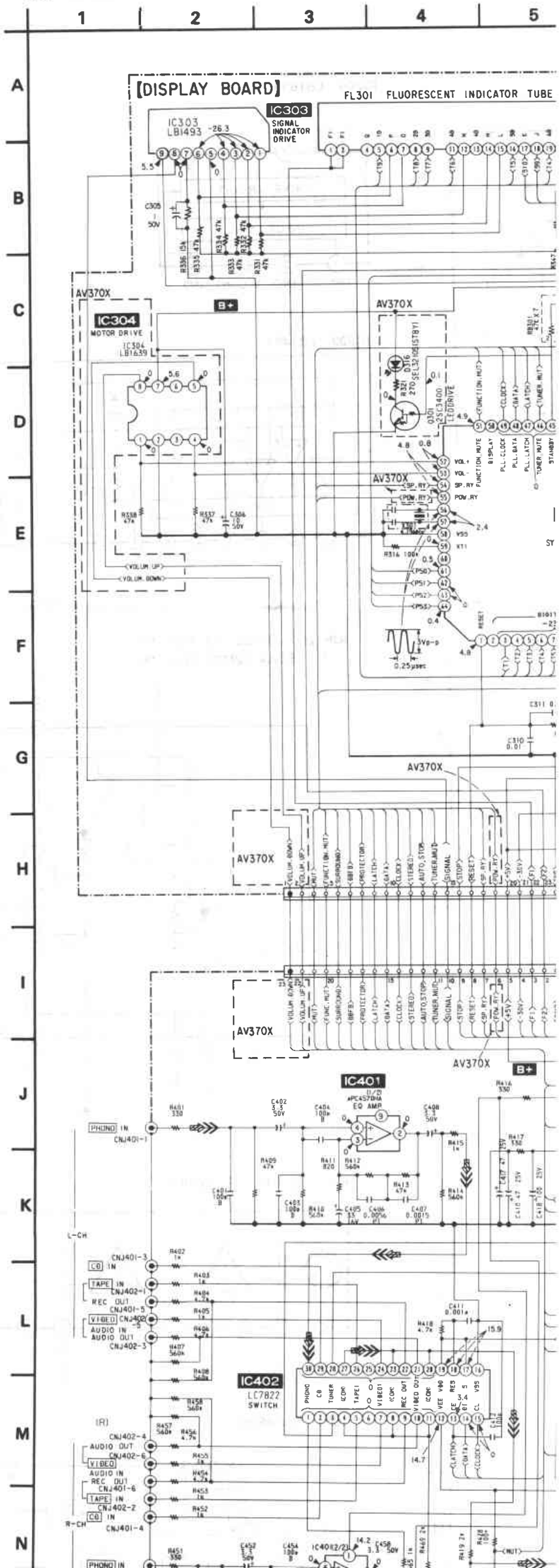

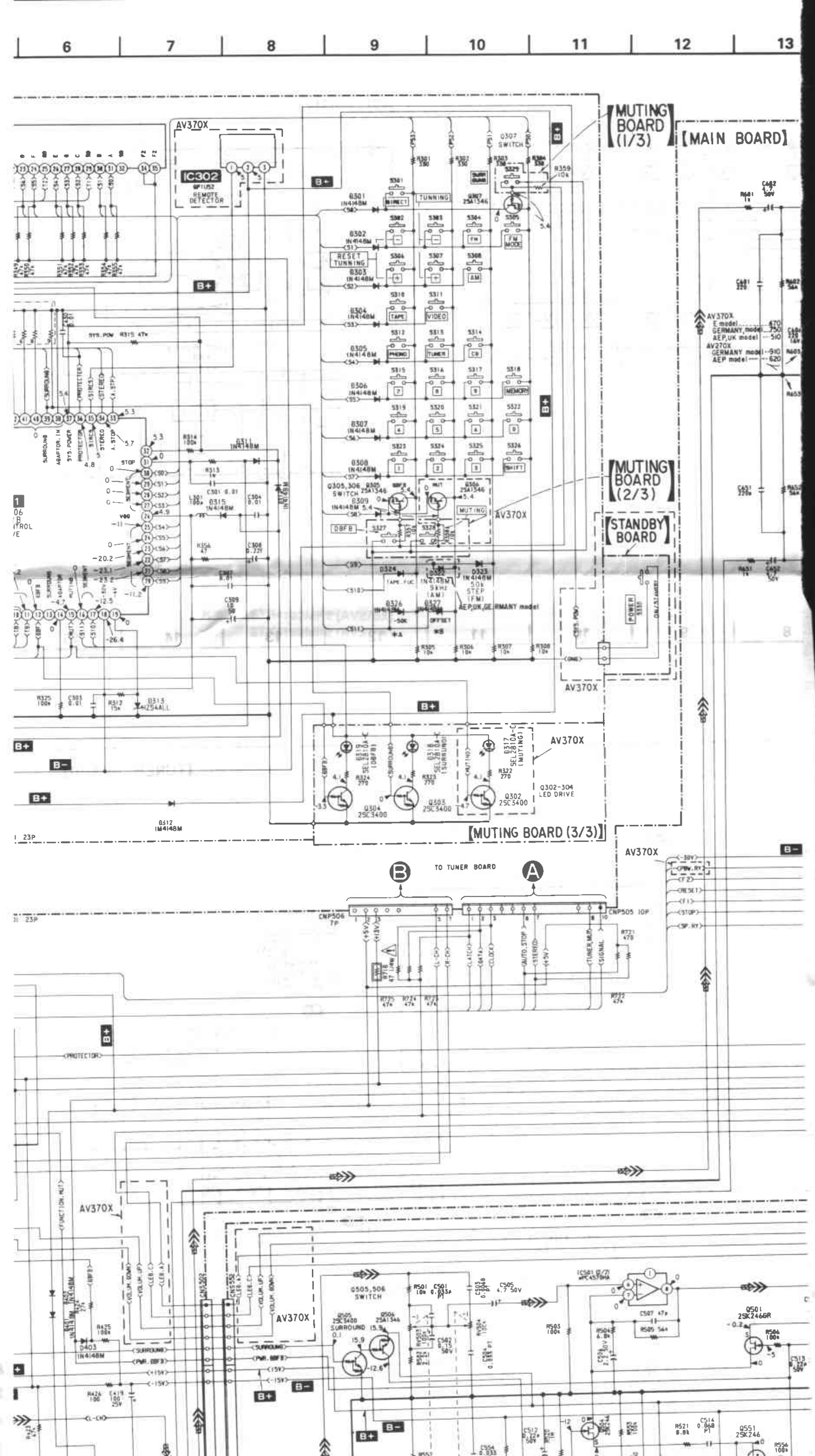
6
7
8
9
10
11
12
13
[MUTING BOARD (1/3)]
[MAIN BOARD]
[MUTING BOARD (2/3)]
[STANDBY BOARD]
[MUTING BOARD (3/3)]
AV370X
IC302
REMOTE DETECTOR
TO TUNER BOARD
Q302-304 LED DRIVE
Q505,506 SWITCH
Q501 2SK246GR
Q551 2SK246
Q403 1N4148M
SYS.POW
SURROUND
ABAPTOR.IN
PROTECTOR
STEREO
A.STOP
STOP
TUNNING
RESET TUNNING
FM MODE
AM
TAPE
VIDEO
PHONO
TUNER
CD
MEMORY
SHIFT
MUTING
DBFB
AEP,UK,GERMANY model
E model
GERMANY model
AEP,UK model
AEP model
POWER SW
ON/STANDBY

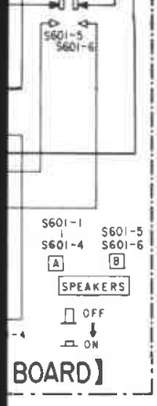

*	IC601	④	− 43.8	− 42.8		− 45.7	**− 33.1**	− 30.4
		⑪	45.6	44.3		47.6	34.1	31.4
		⑫	43.6	43.0		45.8	32.8	29.8
		⑭	− 45.8	− 44.8		− 47.5	− 34.7	− 31.5
	Q602	Ⓔ	− 45.8	− 44.8		− 48.4	− 34.7	− 31.2
		Ⓒ	4.8	4.9		4.9	4.8	4.8
		Ⓑ	− 45.3	− 44.5		− 47.5		− 31.3

(DC Voltage)

UNIT: V

Mark \ Model	STR-AV370X					STR-AV270X	
	AEP	UK	Germany	E (110V)	E (220V)	AEP	Germany
**	3.2	3.2		3.6	3.8	3.2	3.2
***	**69.0**	**67.0**		**65.6**	70.4	51.0	47.8

(AC Voltage)

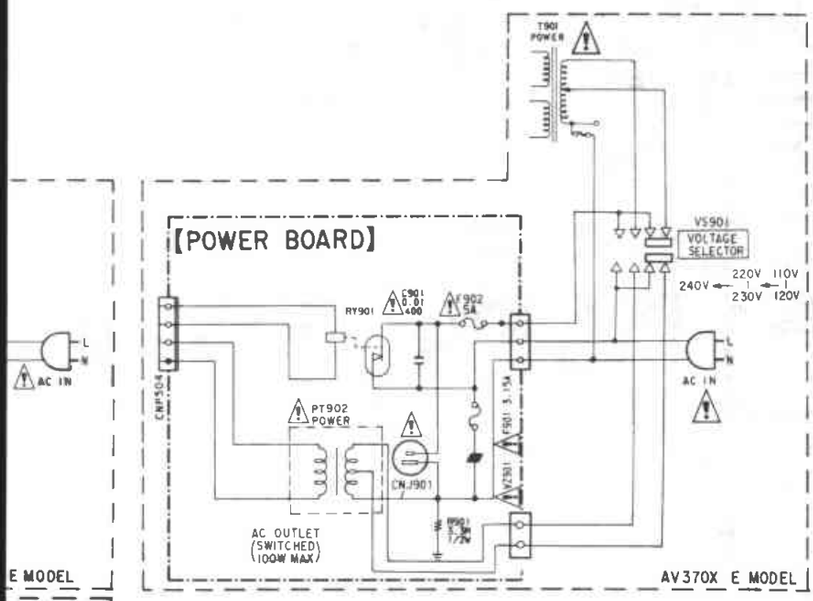

Note:

- *, *A, *B: See page 6 for Note on Ceramic Filter (CF1, 2, 3) Replacement.
- All capacitors are in μF unless otherwise noted. pF: μμF 50 WV or less are not indicated except for electrolytics and tantalums.
- All resistors are in Ω and ¼ W or less unless otherwise specified.
- △ : internal component.
- ▭ : nonflammable resistor.

Note: The components identified by mark ⚠ or dotted line with mark ⚠ are critical for safety.
Replace only with part number specified.

- ▭ : adjustment for repair.
- Voltages and waveforms are dc with respect to ground under no-signal (detuned) conditions.
  no mark : PHONO (Main Section)
  : FM (Tuner Section)
  ( ) : AM (Tuner Section)
- Voltages are taken with a VOM (Input impedance 10 MΩ).
  Voltage variations may be noted due to normal production tolerances.
- Signal path.
  ⇒ : PHONO
  ⇨ : FM

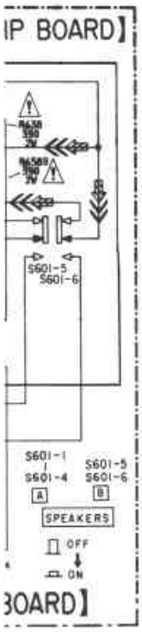

UNIT: V

Mark	Point	Model	STR-AV370X AEP	STR-AV370X UK	STR-AV370X Germany	STR-AV370X E	STR-AV270X AEP	STR-AV270X Germany
*	IC601	④	− 43.8	− 42.8		− 45.7	− 33.1	− 30.4
		⑪	45.6	44.3		47.6	34.1	31.4
		⑫	43.6	43.0		45.8	32.8	29.8
		⑭	− 45.8	− 44.8		− 47.5	− 34.7	− 31.5
	Q602	Ⓔ	− 45.8	− 44.8		− 48.4	− 34.7	− 31.2
		Ⓒ	4.8	4.9		4.9	4.8	4.8
		Ⓑ	− 45.3	− 44.5		− 47.5		− 31.3

(DC Voltage)

UNIT: V

Mark	Model	STR-AV370X AEP	STR-AV370X UK	STR-AV370X Germany	STR-AV370X E (110V)	STR-AV370X E (220V)	STR-AV270X AEP	STR-AV270X Germany
**		3.2	3.2		3.6	3.8	3.2	3.2
***		69.0	67.0		65.6	70.4	51.0	47.8

(AC Voltage)

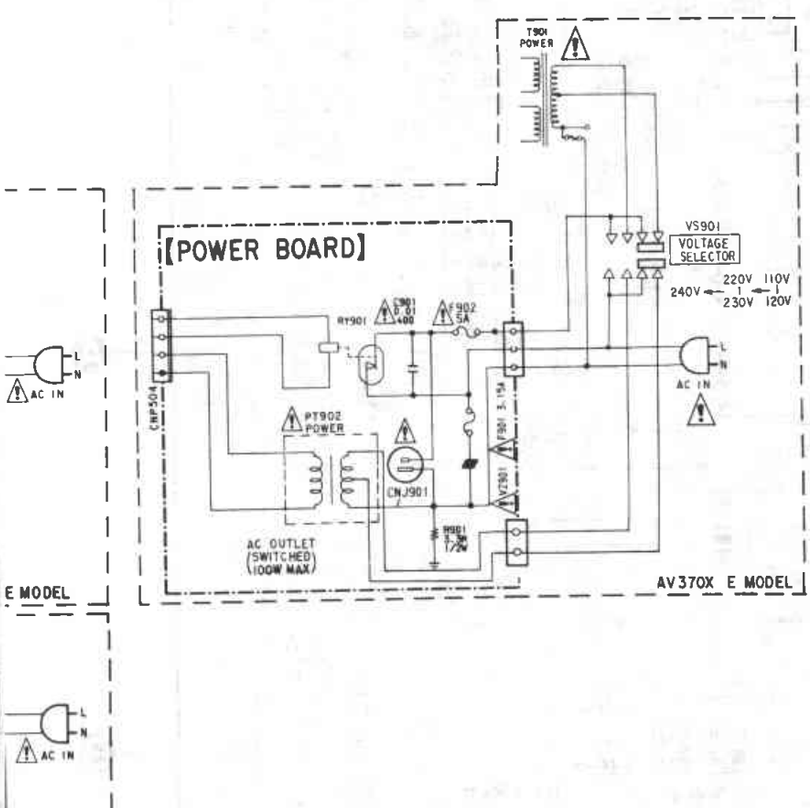

3-6. EXPLANATION OF IC301 (μPD75206)

PIN No.	SIGNAL NAME	FUNCTION		I/O	ACTIVE
1	RESET	Micro Computer RESET		I	L
2	T0	FL tube indication (invalid) digit		O	H
3	T1	FL tube indication digit	T1	O	H
4	T2	FL tube indication digit	T2	O	H
5	T3	FL tube indication digit	T3	O	H
6	T4	FL tube indication digit	T4	O	H
7	T5	FL tube indication digit	T5	O	H
8	T6	FL tube indication digit	T6	O	H
9	T7	FL tube indication digit	T7	O	H
10	T8	FL tube indication digit	T8	O	H
11	T9	FL tube SIGNAL indication digit	T9	O	H
12	T10/PH3	DBFB Output		O	H
13	T11/PH2	IF WIDE/NARROW Output		O	H
14	T12/PH1	Adapter Output		O	H
15	T13/PH0	−20dB Muting Output		O	H
16	T14/S11	FL tube indication Segment/Diode	S11	O	H
17	T15/S10	FL tube indication Segment/Diode	S10	O	H
18	V road	FL tube pulldown power supply		−	−
19	V pre	FL tube driver power supply		−	−
20	S9	FL tube indication Segment/Diode	S9	O	H
21	S8	FL tube indication Segment/Key Scan	S8	O	H
22	S7	FL tube indication Segment/Key Scan	S7	O	H
23	S6	FL tube indication Segment/Key Scan	S6	O	H
24	S5	FL tube indication Segment/Key Scan	S5	O	H
25	S4	FL tube indication Segment/Key Scan	S4	O	H
26	Vdd	Micro Computer power supply		−	−
27	S3	FL tube indication Segment/Key Scan	S3	O	H
28	S2	FL tube indication Segment/Key Scan	S2	O	H
29	S1	FL tube indication Segment/Key Scan	S1	O	H
30	S0	FL tube indication Segment/Key Scan	S0	O	H
31	P00/INT4	Signal to cut power supply	STOP	I	L
32	P01/SCK	Serial latch for electrical adjustment use	SI. LAT	I	L

PIN No.	SIGNAL NAME	FUNCTION		I/O	ACTIVE
33	P02/S0	Tuner Auto Stop input	ASTP	I	L
34	P03/S1	Tuner Stereo input	STEREO	I	L
35	P10/INT0	Remote Control Signal input	SIRCS	I	L
36	P11/INT1	Protector input	PROTECT	I	L
37	P12/INT2	System Power Key input	PKEY	I	L
38	P13/TI0	Adapter Mechanical Switch input	AKEY	I	H
39	P20	Surround output	SURROUND	O	H
40	P21	Video Control A	VCRA	O	H
41	P22	Video Control B	VCRB	O	H
42	P23/BUZ	Video Inhibit	VCRI	O	H
43	P30	Protector Muting	PMUT	O	L
44	P31	Source Direct Output		O	H
45	P32	Standby LED Output	STANBY	O	H
46	P33	Tuner Muting	TMUTE	O	H
47	P60	PLL/7822 Latch	PLAT	O	H
48	P61	PLL/7822/SI Data	DATA	I/O	H
49	P62	PLL/7822/SI Clock	CLOK	I/O	H
50	P63	IF WIDE/NARROW Display output		O	H
51	P40	Function Muting	FMUTE	O	L
52	P41	Motor Volume UP	VOL+	O	H
53	P42	Motor Volume DOWN	VOL−	O	H
54	P43	Speaker Relay	SP. RY	O	H
55	PP0	Power Relay	POW. RY	O	H
56	X1	Ceramic Oscillator		−	−
57	X2	Ceramic Oscillator		−	−
58	Vss	Micro Computer GND		−	−
59	XT1	−		−	−
60	XT2	−		−	−
61	P50	P50	Key Scan Input	I	H
62	P51	P51	Key Scan Input	I	H
63	P52	P52	Key Scan Input	I	H
64	P53	P53	Key Scan Input	I	H

SECTION 4
EXPLODED VIEWS

NOTE:

- -XX and -X mean standardized parts, so they may have some difference from the original one.
- Color Indication of Appearance Parts Example:
  KNOB, BALANCE (WHITE) . . . (RED)
  ↑ Parts Color ↑ Cabinet's Color
- Items marked "*" are not stocked since they are seldom required for routine service. Some delay should be anticipated when ordering these items.
- The mechanical parts with no reference number in the exploded views are not supplied.
- Hardware (# mark) list is given in the last of this parts list.

The components identified by mark ⚠ or dotted line with mark ⚠ are critical for safety.
Replace only with part number specified.

- G: Germany model.

(1) FRONT PANEL ASSEMBLY SECTION

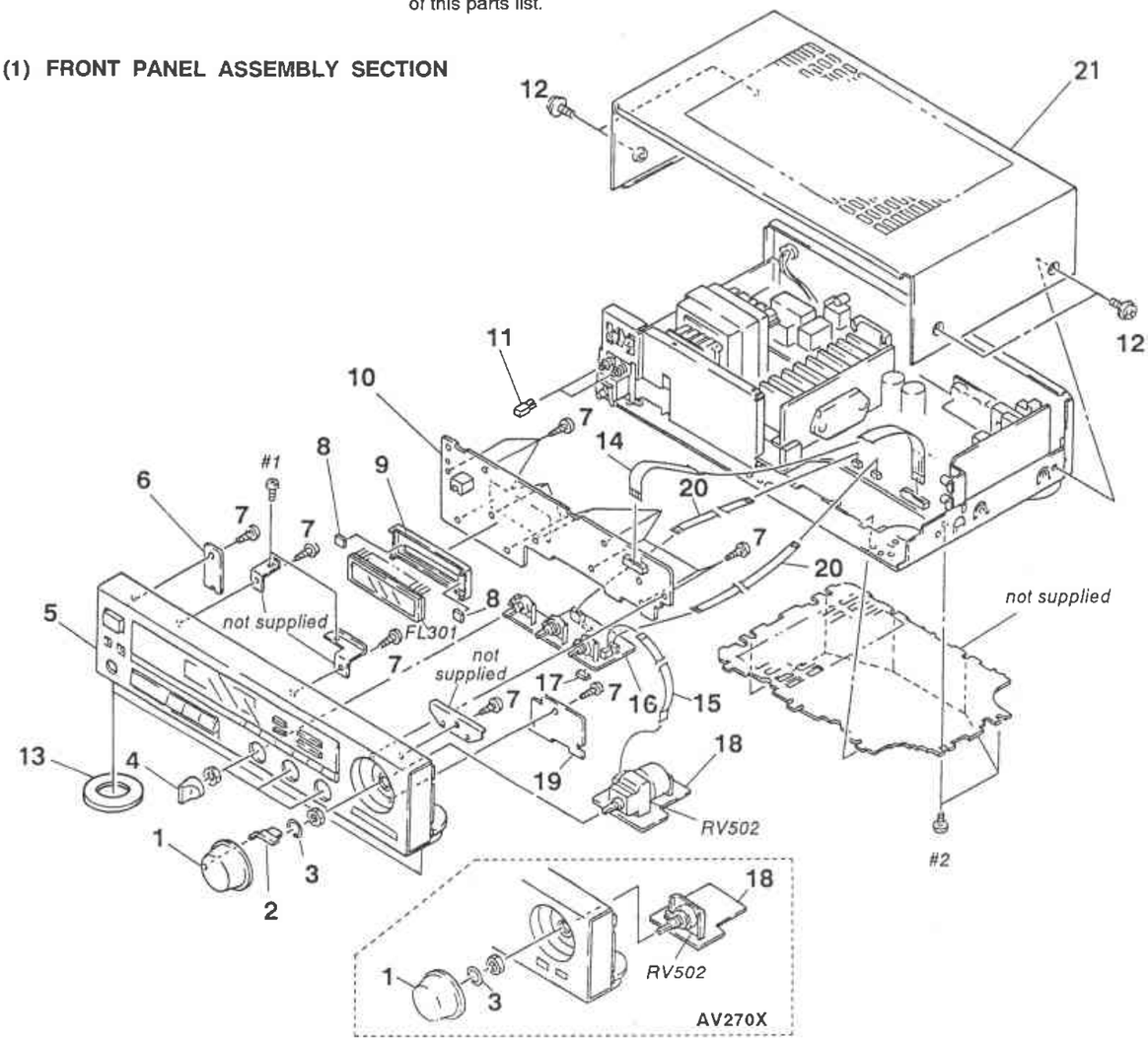

Ref. No.	Part No.	Description	Remark
1	4-943-091-01	KNOB (VOL)	
2	4-943-092-01	PLATE(VOL), LIGHT GUIDE (AV370X)	
3	3-350-426-01	SPRING, RING	
4	4-916-745-11	KNOB (DIA. 21)	
5	A-4323-872-A	PANEL ASSY, FRONT (AV370X)	
5	A-4323-909-A	PANEL ASSY, FRONT (AV270X)	
6	1-638-236-11	STANDBY BOARD (AV370X)	
7	4-928-635-01	SCREW, +BV (2.6X8) TAPPING	
8	4-921-941-01	CUSIHON (FL)	
9	4-943-107-01	HOLDER (FL TUBE)	
10	* A-4341-721-A	DISPLAY BOARD, COMPLETE (AV270X)	
10	* A-4341-730-A	DISPLAY BOARD, COMPLETE (AV370X)	
11	4-943-087-01	BUTTON (S)	
12	3-704-366-01	SCREW (CASE) (M3X8)	
13	4-923-836-11	CUSHION	
14	* 1-590-499-11	WIRE, FLAT TYPE (23 CORE)	
15	* 1-590-770-11	WIRE, FLAT TYPE (11 CORE)	
16	A-4341-733-A	TONE BOARD, COMPLETE (AEP, UK, E)	
16	* A-4341-734-A	TONE BOARD, COMPLETE (G)	
17	9-911-842-XX	CUSHION (CD), RUBBER	
18	1-638-950-11	VOLUME BOARD	
19	1-638-239-11	MUTING BOARD	
20	* 1-590-769-11	WIRE, FLAT TYPE (7 CORE)	
21	* 4-943-088-01	CASE	

(2) CHASSIS SECTION

The components identified by mark ⚠ or dotted line with mark ⚠ are critical for safety.
Replace only with part number specified.

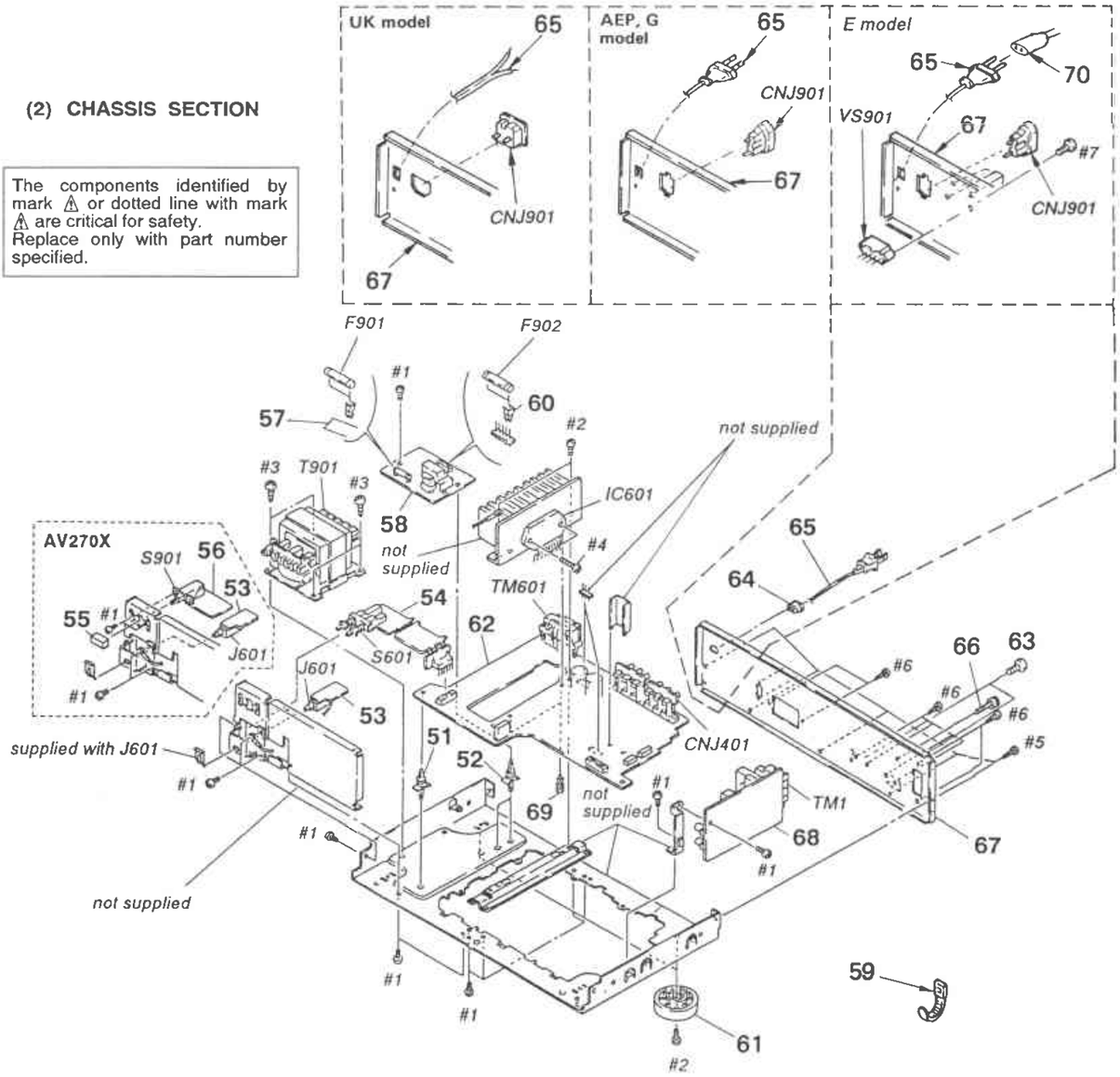

Ref. No.	Part No.	Description	Remark
51	* 4-924-098-11	HOLDER, PC BOARD	
52	* 4-924-098-31	HOLDER, PC BOARD	
53	1-638-949-11	HP BOARD	
54	1-638-234-11	SPEAKER BOARD	
55	4-917-460-01	KNOB, POWER (AV270X)	
56	1-638-237-11	AC SWITCH BOARD (AV270X)	
57	3-701-947-15	LABEL (T2.5A), FUSE	
58	1-638-235-11	POWER BOARD	
59	3-701-748-00	CLAMP	
60	1-533-217-31	HOLDER, FUSE	
61	3-318-688-31	FOOT (F58175S)	
62	* A-4341-719-A	MAIN BOARD, COMPLETE (AV270X G)	
62	* A-4341-726-A	MAIN BOARD, COMPLETE (AV370X E)	
62	* A-4341-727-A	MAIN BOARD, COMPLETE (AV370X G)	
62	* A-4345-738-A	MAIN BOARD, COMPLETE (AV270X AEP, UK)	
62	* A-4345-739-A	MAIN BOARD, COMPLETE (AV270X AEP)	
63	7-621-849-00	SCREW, TAPPING	
64	* 3-703-244-00	BUSHING (2104), CORD	
65	⚠* 1-556-035-00	COAD, POWER (AV370X UK)	
65	⚠ 1-555-750-00	CORD, POWER (AV270X/AV370X AEP, G, E)	
66	3-706-165-00	SCREW	
67	* 4-943-098-21	PANEL, BACK (AV370X AEP)	
67	* 4-943-098-41	PANEL, BACK (AV370X UK)	
67	* 4-943-098-31	PANEL, BACK (AV370X G)	
67	* 4-943-098-51	PANEL, BACK (AV370X E)	
67	* 4-943-109-21	PANEL, BACK (AV270X G)	
67	* 4-943-109-51	PANEL, BACK (AV270X AEP)	
68	* A-4341-740-A	TUNER BOARD, COMPLETE (AV270X AEP/AV370X AEP, UK)	
68	* A-4341-741-A	TUNER BOARD, COMPLETE(AV270X G/AV370X G)	
68	* A-4341-742-A	TUNER BOARD, COMPLETE (AV370X E)	
69	3-698-359-01	RIVET (DIA 3.5), NYLON	
70	⚠ 1-569-008-11	ADAPTER, CONVERSION (AV370X E)	
CNJ901	⚠ 1-526-751-11	OUTLET, AC (AV370X UK)	
CNJ901	⚠ 1-526-794-11	OUTLET, AC (AV370X AEP, G, E)	
F901	⚠ 1-532-286-00	FUSE (2.5A 125V)	
F902	⚠ 1-532-259-00	FUSE (1.6A 125V)(AV370X AEP, UK)	
F902	⚠ 1-532-285-00	FUSE (1.25A 125V)(AV270X)	
F902	⚠ 1-532-286-00	FUSE (2.5A 125V)(AV370X G, E)	
T901	⚠ 1-450-359-11	TRANSFORMER, POWER (AV370X UK)	
T901	⚠ 1-450-360-11	TRANSFORMER, POWER (AV370X E)	
T901	⚠ 1-450-385-11	TRANSFORMER, POWER (AV270X G)	
T901	⚠ 1-450-363-11	TRANSFORMER, POWER (AV370X AEP, G)	
T901	⚠ 1-450-364-11	TRANSFORMER, POWER (AV270X AEP)	
TM601	1-537-341-11	TERMINAL BOARD (8P SPEAKER)	
VS901	⚠ 1-570-307-11	SWITCH, VOLTAGE CHANGE (AV370X E)	

SECTION 5
ELECTRICAL PARTS LIST

AC SWITCH | DISPLAY

NOTE:

- Due to standardization, replacements in the parts list may be different from the parts specified in the diagrams or the components used on the set.
- -XX and -X mean standardized parts, so they may have some difference from the original one.
- RESISTORS
  All resistors are in ohms.
  METAL: Metal-film resistor
  METAL OXIDE: Metal Oxide-film resistor
  F: nonflammable
- Items marked "*" are not stocked since they are seldom required for routine service. Some delay should be anticipated when ordering these items.
- SEMICONDUCTORS
  In each case, u: μ, for example:
  uA...: μA..., uPA...: μPA...,
  uPB...: μPB..., uPC...: μPC...,
  uPD...: μPD...
- CAPACITORS
  uF: μF
- COILS
  uH: μH

The components identified by mark ⚠ or dotted line with mark ⚠ are critical for safety.
Replace only with part number specified.

When including parts by reference number, please include the board name.

- G: Germany model.

Ref. No.	Part No.	Description				Remark
	* 1-638-237-11	AC SWITCH BOARD (AV270X)				
		**********				
		〈 CAPACITOR 〉				
C901	⚠ 1-161-744-00	CERAMIC	0.01		400V	(AV270X)
		〈 SWITCH 〉				
S901	⚠ 1-152-267-21	SWITCH, PUSH (AC POWER)(1 KEY)(POWER) (AV270X)				
**********						
	* A-4341-721-A	DISPLAY BOARD, COMPLETE (AV270X)				
	* A-4341-731-A	DISPLAY BOARD, COMPLETE(AV370X AEP, UK, G)				
	* A-4341-750-A	DISPLAY BOARD, COMPLETE (AV370X E)				
		**********				
	* 1-568-830-11	SOCKET, CONNECTOR 11P				
	* 4-921-941-01	CUSHION (FL)				
	* 4-943-107-01	HOLDER (FL TUBE)				
		〈 CAPACITOR 〉				
C301	1-162-306-11	CERAMIC	0.01uF	20%	16V	
C303	1-162-306-11	CERAMIC	0.01uF	20%	16V	
C304	1-162-306-11	CERAMIC	0.01uF	20%	16V	
C305	1-124-903-11	ELECT	1uF	20%	50V	
C306	1-124-261-00	ELECT	10uF	20%	50V	
C307	1-162-306-11	CERAMIC	0.01uF	20%	16V	
C308	1-125-486-11	DUBLE LAYERS	0.22F		5.5V	
C309	1-124-261-00	ELECT	10uF	20%	50V	
C310	1-162-306-11	CERAMIC	0.01uF	20%	16V	
C311	1-162-306-11	CERAMIC	0.01uF	20%	16V	
C630	1-162-306-11	CERAMIC	0.01uF	20%	16V	
		〈 CONNECTOR 〉				
CNJ306	* 1-568-937-11	PIN, CONNECTOR 10P				
CNP904	* 1-560-062-00	PIN, CONNECTOR 4P				
CNS301	* 1-568-865-11	SOCKET, CONNECTOR 23P				

Ref. No.	Part No.	Description	Remark
		〈 DIODE 〉	
D301	8-719-987-63	DIODE 1N4148M	
D302	8-719-987-63	DIODE 1N4148M	
D303	8-719-987-63	DIODE 1N4148M	
D304	8-719-987-63	DIODE 1N4148M	
D305	8-719-987-63	DIODE 1N4148M	
D306	8-719-987-63	DIODE 1N4148M	
D307	8-719-987-63	DIODE 1N4148M	
D308	8-719-987-63	DIODE 1N4148M	
D309	8-719-987-63	DIODE 1N4148M	
D311	8-719-987-63	DIODE 1N4148M	
D312	8-719-987-63	DIODE 1N4148M	
D313	8-719-985-53	DIODE HZS4ALL-TD	
D314	8-719-987-63	DIODE 1N4148M	
D315	8-719-987-63	DIODE 1N4148M	
D322	8-719-987-63	DIODE 1N4148M	
D323	8-719-987-63	DIODE 1N4148M	
D324	8-719-987-63	DIODE 1N4148M	
D326	8-719-987-63	DIODE 1N4148M	
D327	8-719-987-63	DIODE 1N4148M	
D803	8-719-987-63	DIODE 1N4148M	
		〈 INDICATOR TUBE 〉	
FL301	1-519-509-11	INDICATOR TUBE, FLUORESCENT	
		〈 IC 〉	
IC301	8-759-154-23	IC uPD75206GF-715-3BE	
IC302	8-749-920-83	IC GP1U52XB	
IC303	8-759-800-95	IC LB1493	
IC304	8-759-820-62	IC LB1639 (AV370X)	
		〈 INDICATOR 〉	
L301	1-410-521-11	INDUCTOR 100uH	
		〈 TRANSISTOR 〉	
Q301	8-729-900-36	TRANSISTOR DTC124ES	
Q305	8-729-900-63	TRANSISTOR DTA124ES	

DISPLAY HP MAIN

Ref. No.	Part No.	Description				Remark
Q306	8-729-900-63	TRANSISTOR	DTA124ES			
Q307	8-729-900-63	TRANSISTOR	DTA124ES			
		(RESISTOR)				
R301	1-249-411-11	CARBON	330	5%	1/4W	
R302	1-249-411-11	CARBON	330	5%	1/4W	
R303	1-249-411-11	CARBON	330	5%	1/4W	
R304	1-249-411-11	CARBON	330	5%	1/4W	
R305	1-249-429-11	CARBON	10K	5%	1/4W	
R306	1-249-429-11	CARBON	10K	5%	1/4W	
R307	1-249-429-11	CARBON	10K	5%	1/4W	
R308	1-249-429-11	CARBON	10K	5%	1/4W	
R311	1-249-429-11	CARBON	10K	5%	1/4W	
R312	1-249-431-11	CARBON	15K	5%	1/4W	
R313	1-249-417-11	CARBON	1K	5%	1/4W	
R314	1-249-441-11	CARBON	100K	5%	1/4W	
R315	1-249-437-11	CARBON	47K	5%	1/4W	
R316	1-249-441-11	CARBON	100K	5%	1/4W	
R321	1-249-410-11	CARBON	270	5%	1/4W	(AV370X)
R325	1-249-441-11	CARBON	100K	5%	1/4W	
R331	1-249-437-11	CARBON	47K	5%	1/4W	
R332	1-249-437-11	CARBON	47K	5%	1/4W	
R333	1-249-437-11	CARBON	47K	5%	1/4W	
R334	1-249-437-11	CARBON	47K	5%	1/4W	
R335	1-249-437-11	CARBON	47K	5%	1/4W	
R336	1-249-431-11	CARBON	15K	5%	1/4W	
R337	1-249-437-11	CARBON	47K	5%	1/4W	
R338	1-249-437-11	CARBON	47K	5%	1/4W	
R347	1-249-437-11	CARBON	47K	5%	1/4W	
R348	1-249-437-11	CARBON	47K	5%	1/4W	
R349	1-249-437-11	CARBON	47K	5%	1/4W	
R350	1-249-437-11	CARBON	47K	5%	1/4W	
R351	1-249-437-11	CARBON	47K	5%	1/4W	
R352	1-249-437-11	CARBON	47K	5%	1/4W	
R353	1-249-437-11	CARBON	47K	5%	1/4W	
R354	1-249-437-11	CARBON	47K	5%	1/4W	
R355	1-249-437-11	CARBON	47K	5%	1/4W	
R356	1-249-401-11	CARBON	47	5%	1/4W	
		(COMPOSITION CIRCUIT BLOCK)				
RB301	1-233-081-11	COMPOSITION CIRCUIT BLOCK				
		(SWITCH)				
S301	1-554-303-21	SWITCH, TACTILE (DIRECT)				
S302	1-554-303-21	SWITCH, TACTILE (PRESET TUNING:-)				
S303	1-554-303-21	SWITCH, TACTILE (TUNING:-)				
S304	1-554-303-21	SWITCH, TACTILE (FM)				
S305	1-554-303-21	SWITCH, TACTILE (FM MODE)				
S306	1-554-303-21	SWITCH, TACTILE (PRESET TUNING:+)				
S307	1-554-303-21	SWITCH, TACTILE (TUNING:+)				
S308	1-554-303-21	SWITCH, TACTILE (AM)				
S310	1-554-303-21	SWITCH, TACTILE (TAPE)				
S311	1-554-303-21	SWITCH, TACTILE (VIDEO)				
S312	1-554-303-21	SWITCH, TACTILE (PHONO)				
S313	1-554-303-21	SWITCH, TACTILE (TUNER)				
S314	1-554-303-21	SWITCH, TACTILE (CD)				
S315	1-554-303-21	SWITCH, TACTILE (7)				
S316	1-554-303-21	SWITCH, TACTILE (8)				
S317	1-554-303-21	SWITCH, TACTILE (9)				
S318	1-554-303-21	SWITCH, TACTILE (MEMORY)				
S319	1-554-303-21	SWITCH, TACTILE (4)				
S320	1-554-303-21	SWITCH, TACTILE (5)				
S321	1-554-303-21	SWITCH, TACTILE (6)				
S322	1-554-303-21	SWITCH, TACTILE (0)				
S323	1-554-303-21	SWITCH, TACTILE (1)				
S324	1-554-303-21	SWITCH, TACTILE (2)				
S325	1-554-303-21	SWITCH, TACTILE (3)				
S326	1-554-303-21	SWITCH, TACTILE (SHIFT)				
		(VIBRATOR)				
X301	1-577-101-11	VIBRATOR, CERAMIC (4.19MHz)				

****

* 1-638-949-11 HP BOARD
****

(JACK)

J601	1-568-515-21	JACK (LARGE TYPE)(HEADPHONES)				
		(RESISTOR)				
R638	⚠ 1-216-454-11	METAL OXIDE	390	5%	2W	F
R658	⚠ 1-216-454-11	METAL OXIDE	390	5%	2W	F

****

* A-4341-719-A MAIN BOARD, COMPLETE (AV270X G)

* A-4341-726-A MAIN BOARD, COMPLETE (AV370X E)

* A-4341-727-A MAIN BOARD, COMPLETE (AV370X G)

* A-4341-738-A MAIN BOARD, COMPLETE (AV370X AEP, UK)

* A-4341-739-A MAIN BOARD, COMPLETE (AV270X AEP)
****

* 3-698-359-01 RIVET (DIA. 3.5), NYLON
7-685-650-79 SCREW +BVTP 3X16 TYPE2 IT-3
7-682-548-04 SCREW +BVTT 3X8 (S)

Note: The components identified by mark ⚠ or dotted line with mark ⚠ are critical for safety.
Replace only with part number specified.

Ref. No.	Part No.	Description				Remark
		(CAPACITOR)				
C401	1-162-282-31	CERAMIC	100PF	10%	50V	
C402	1-123-382-00	ELECT	3. 3uF	20%	100V	
C403	1-162-282-31	CERAMIC	100PF	10%	50V	
C404	1-162-282-31	CERAMIC	100PF	10%	50V	
C405	1-124-034-51	ELECT	33uF	20%	16V	
C406	1-130-480-00	MYLAR	0. 0056uF	5%	50V	
C407	1-130-473-00	MYLAR	0. 0015uF	5%	50V	
C408	1-123-382-00	ELECT	3. 3uF	20%	100V	
C409	1-124-477-11	ELECT	47uF	20%	25V	
C410	1-124-477-11	ELECT	47uF	20%	25V	
C411	1-162-294-31	CERAMIC	0. 001uF	10%	50V	
C412	1-162-282-31	CERAMIC	100PF	10%	50V	
C417	1-124-478-11	ELECT	100uF	20%	25V	
C418	1-124-478-11	ELECT	100uF	20%	25V	
C419	1-124-478-11	ELECT	100uF	20%	25V	
C420	1-124-927-11	ELECT	4. 7uF	20%	100V	(AV370X)
C421	1-124-927-11	ELECT	4. 7uF	20%	100V	
C451	1-162-282-31	CERAMIC	100PF	10%	50V	
C452	1-123-382-00	ELECT	3. 3uF	20%	100V	
C453	1-162-282-31	CERAMIC	100PF	10%	50V	
C454	1-162-282-31	CERAMIC	100PF	10%	50V	
C455	1-124-034-51	ELECT	33uF	20%	16V	
C456	1-130-480-00	MYLAR	0. 0056uF	5%	50V	
C457	1-130-473-00	MYLAR	0. 0015uF	5%	50V	
C458	1-123-382-00	ELECT	3. 3uF	20%	100V	
C601	1-162-286-31	CERAMIC	220PF	10%	50V	
C602	1-126-163-11	ELECT	4. 7uF	20%	50V	
C603	1-162-288-31	CERAMIC	330PF	10%	50V	
C604	1-124-122-11	ELECT	100uF	20%	50V	
C605	1-124-910-11	ELECT	47uF	20%	50V	
C606	1-124-120-11	ELECT	220uF	20%	25V	
C607	1-162-193-31	CERAMIC	3. 3PF	10%	50V	
C608	1-126-059-11	ELECT	10uF	20%	50V	
C621	1-130-495-00	MYLAR	0. 1uF	5%	50V	
C622	1-130-495-00	MYLAR	0. 1uF	5%	50V	
C623	1-124-907-11	ELECT	10uF	20%	50V	
C624	1-124-472-11	ELECT	470uF	20%	10V	
C625	1-130-495-00	MYLAR	0. 1uF	5%	50V	
C651	1-162-286-31	CERAMIC	220PF	10%	50V	
C652	1-126-163-11	ELECT	4. 7uF	20%	50V	
C653	1-162-288-31	CERAMIC	330PF	10%	50V	
C654	1-124-122-11	ELECT	100uF	20%	50V	
C655	1-124-910-11	ELECT	47uF	20%	50V	
C656	1-124-120-11	ELECT	220uF	20%	25V	
C657	1-162-193-31	CERAMIC	3. 3PF	10%	50V	
C658	1-126-059-11	ELECT	10uF	20%	50V	
C671	1-130-495-00	MYLAR	0. 1uF	5%	50V	
C672	1-130-495-00	MYLAR	0. 1uF	5%	50V	
C675	1-130-495-00	MYLAR	0. 1uF	5%	50V	

Ref. No.	Part No.	Description				Remark
C701	1-106-367-00	MYLAR	0. 01uF	5%	200V	(UK, E)
C702	1-106-379-00	MYLAR	0. 033uF	5%	200V	(AEP, G)
C704	1-124-478-11	ELECT	100uF	20%	25V	
C705	1-124-477-11	ELECT	47uF	20%	25V	
C706	1-101-005-00	CERAMIC	22000PF		50V	
C708	1-124-927-11	ELECT	4. 7uF	20%	100V	
C710	1-124-910-11	ELECT	47uF	20%	50V	
C711	1-124-910-11	ELECT	47uF	20%	50V	
C712	1-124-907-11	ELECT	10uF	20%	50V	
C713	1-124-477-11	ELECT	47uF	20%	25V	
C714	1-124-477-11	ELECT	47uF	20%	25V	
C716	1-124-464-11	ELECT	0. 22uF	20%	50V	
C717	1-124-902-00	ELECT	0. 47uF	20%	50V	
C718	1-124-903-11	ELECT	1uF	20%	50V	
C719	1-101-005-00	CERAMIC	22000PF		50V	
C801	1-125-614-11	ELECT	6800uF	20%	50V	
C802	1-125-614-11	ELECT	6800uF	20%	50V	
C803	1-101-005-00	CERAMIC	22000PF	50V		(AV370X)
C804	1-101-005-00	CERAMIC	22000PF	50V		(AV370X)
C805	1-124-557-11	ELECT	1000uF	20%	25V	
C810	1-126-301-11	ELECT	1uF	20%	50V	
		(JACK)				
CNJ401 *	1-580-835-11	JACK, PIN 6P				
CNJ402 *	1-580-835-11	JACK, PIN 6P				
CNJ610 *	1-569-507-11	PIN, CONNECTOR 12P				
		(CONNECTOR)				
CNP503 *	1-564-507-11	PLUG, CONNECTOR 4P				
CNP504 *	1-535-116-00	TERMINAL				
CNP505 *	1-580-804-11	PIN, CONNECTOR 10P				
CNP506 *	1-564-903-11	PIN, CONNECTOR (L TYPE) 7P				
CNP507 *	1-535-116-00	TERMINAL				
CNS501 *	1-568-839-11	SOCKET, CONNECTOR 23P				
CNS502 *	1-568-826-11	SOCKET, CONNECTOR 7P				
CNS503 *	1-568-826-11	SOCKET, CONNECTOR 7P				
CNS507 *	1-569-498-11	SOCKET, CONNECTOR 12P				
CNS551 *	1-568-826-11	SOCKET, CONNECTOR 7P				
		(DIODE)				
D401	8-719-987-63	DIODE 1N4148M				
D402	8-719-987-63	DIODE 1N4148M				
D403	8-719-987-63	DIODE 1N4148M				
D601	8-719-987-63	DIODE 1N4148M				
D602	8-719-987-63	DIODE 1N4148M				
D603	8-719-987-63	DIODE 1N4148M				
D604	8-719-987-63	DIODE 1N4148M				
D605	8-719-987-63	DIODE 1N4148M				
D651	8-719-987-63	DIODE 1N4148M				
D702	8-719-010-86	DIODE UZ-16BSB				

MAIN

Ref. No.	Part No.	Description	Remark
D703	8-719-010-29	DIODE UZ-4.3BSB	
D704	8-719-110-67	DIODE RD27ESB2	
D705	8-719-010-82	DIODE UZ-15BSB	
D706	8-719-010-47	DIODE UZ-6.2BSC	
D707	8-719-933-41	DIODE HZS6C3L	
D708	8-719-985-53	DIODE HZS4ALL	
D709	8-719-987-63	DIODE 1N4148M	
D801	8-719-312-09	DIODE RBA-402	
D803	8-719-987-63	DIODE 1N4148M	
D814	8-719-200-82	DIODE 11ES2 (AV370X)	
D815	8-719-200-82	DIODE 11ES2 (AV370X)	
D816	8-719-200-82	DIODE 11ES2 (AV370X)	
D817	8-719-200-82	DIODE 11ES2 (AV370X)	
D818	8-719-987-63	DIODE 1N4148M	
D819	8-719-987-63	DIODE 1N4148M	
		〈 IC 〉	
IC401	8-759-112-93	IC uPC4570HA-1	
IC402	8-759-805-14	IC LC7822	
IC601	8-749-900-24	IC STK4162MK2 (AV270X)	
IC601	8-749-900-78	IC STK4192MK2 (AV370X)	
		〈 COIL 〉	
L601	* 1-420-872-00	COIL, AIR CORE	
L651	* 1-420-872-00	COIL, AIR CORE	
		〈 TRANSISTOR 〉	
Q401	8-729-141-30	TRANSISTOR 2SC3623A-LK (AV370X)	
Q402	8-729-141-30	TRANSISTOR 2SC3623A-LK	
Q403	8-729-900-63	TRANSISTOR DTA124ES	
Q451	8-729-141-30	TRANSISTOR 2SC3623A-LK (AV370X)	
Q452	8-729-141-30	TRANSISTOR 2SC3623A-LK	
Q601	8-729-108-14	TRANSISTOR 2SA988-F	
Q602	8-729-620-05	TRANSISTOR 2SC2603-EF	
Q603	8-729-620-05	TRANSISTOR 2SC2603-EF	
Q604	8-729-620-05	TRANSISTOR 2SC2603-EF	
Q605	8-729-620-05	TRANSISTOR 2SC2603-EF	
Q651	8-729-108-14	TRANSISTOR 2SA988-F	
Q701	8-729-209-15	TRANSISTOR 2SD2012	
Q702	8-729-140-97	TRANSISTOR 2SB734-34	
Q703	8-729-180-92	TRANSISTOR 2SD809-K	
Q704	8-729-620-05	TRANSISTOR 2SC2603-EF	
Q705	8-729-119-76	TRANSISTOR 2SA1175-HFE	
Q706	8-729-119-76	TRANSISTOR 2SA1175-HFE	
Q707	8-729-620-05	TRANSISTOR 2SC2603-EF	
Q708	8-729-900-36	TRANSISTOR DTC124ES	
Q709	8-729-904-39	TRANSISTOR DTC114TS	
Q801	8-729-620-05	TRANSISTOR 2SC2603-EF	

Ref. No.	Part No.	Description	Remark
		〈 RESISTOR 〉	
R401	1-249-411-11	CARBON 330 5% 1/4W	
R402	1-249-417-11	CARBON 1K 5% 1/4W	
R403	1-249-417-11	CARBON 1K 5% 1/4W	
R404	1-249-425-11	CARBON 4.7K 5% 1/4W	
R405	1-249-417-11	CARBON 1K 5% 1/4W	
R406	1-249-425-11	CARBON 4.7K 5% 1/4W	
R407	1-247-897-11	CARBON 560K 5% 1/4W	
R408	1-247-897-11	CARBON 560K 5% 1/4W	
R409	1-249-437-11	CARBON 47K 5% 1/4W	
R410	1-247-897-11	CARBON 560K 5% 1/4W	
R411	1-249-416-11	CARBON 820 5% 1/4W	
R412	1-247-897-11	CARBON 560K 5% 1/4W	
R413	1-249-437-11	CARBON 47K 5% 1/4W	
R414	1-247-897-11	CARBON 560K 5% 1/4W	
R415	1-249-417-11	CARBON 1K 5% 1/4W	
R416	1-249-411-11	CARBON 330 5% 1/4W	
R417	1-249-411-11	CARBON 330 5% 1/4W	
R418	1-249-425-11	CARBON 4.7K 5% 1/4W	
R419	1-247-838-00	CARBON 2K 5% 1/4W	
R420	1-249-409-11	CARBON 220 5% 1/4W (AV370X)	
R421	1-249-429-11	CARBON 10K 5% 1/4W	
R422	1-249-425-11	CARBON 4.7K 5% 1/4W	
R423	1-249-437-11	CARBON 47K 5% 1/4W	
R424	1-249-434-11	CARBON 27K 5% 1/4W	
R425	1-249-441-11	CARBON 100K 5% 1/4W	
R426	1-249-405-11	CARBON 100 5% 1/4W	
R427	1-249-437-11	CARBON 47K 5% 1/4W	
R428	1-249-441-11	CARBON 100K 5% 1/4W	
R451	1-249-411-11	CARBON 330 5% 1/4W	
R452	1-249-417-11	CARBON 1K 5% 1/4W	
R453	1-249-417-11	CARBON 1K 5% 1/4W	
R454	1-249-425-11	CARBON 4.7K 5% 1/4W	
R455	1-249-417-11	CARBON 1K 5% 1/4W	
R456	1-249-425-11	CARBON 4.7K 5% 1/4W	
R457	1-247-897-11	CARBON 560K 5% 1/4W	
R458	1-247-897-11	CARBON 560K 5% 1/4W	
R459	1-249-437-11	CARBON 47K 5% 1/4W	
R460	1-247-897-11	CARBON 560K 5% 1/4W	
R461	1-249-416-11	CARBON 820 5% 1/4W	
R462	1-247-897-11	CARBON 560K 5% 1/4W	
R463	1-249-437-11	CARBON 47K 5% 1/4W	
R464	1-247-897-11	CARBON 560K 5% 1/4W	
R465	1-249-417-11	CARBON 1K 5% 1/4W	
R469	1-247-838-00	CARBON 2K 5% 1/4W	
R470	1-249-409-11	CARBON 220 5% 1/4W (AV370X)	
R601	1-249-417-11	CARBON 1K 5% 1/4W	
R602	1-249-438-11	CARBON 56K 5% 1/4W	
R603	1-247-826-91	CARBON 620 5% 1/4W (AV270X AEP)	
R603	1-247-830-11	CARBON 910 5% 1/4W (AV270X G)	

MAIN MUTING

Ref. No.	Part No.	Description				Remark
R603	1-247-828-11	CARBON	750	5%	1/4W	(AV370X G)
R603	1-249-413-11	CARBON	470	5%	1/4W	(AV370X E)
R603	1-249-442-11	CARBON	510	5%	1/4W	(AV370X AEP, UK)
R604	1-249-423-11	CARBON	3.3K	5%	1/4W	
R605	1-249-438-11	CARBON	56K	5%	1/4W	
R606	1-249-420-11	CARBON	1.8K	5%	1/4W	
R607	1-217-151-00	RES, METAL PLATE	0.22			
R608	1-249-417-11	CARBON	1K	5%	1/4W	
R612	1-249-405-11	CARBON	100	5%	1/4W	
R615	1-249-405-11	CARBON	100	5%	1/4W	
R621	1-249-427-11	CARBON	6.8K	5%	1/4W	
R622	1-249-435-11	CARBON	33K	5%	1/4W	
R623	1-249-433-11	CARBON	22K	5%	1/4W	
R624	1-249-390-11	CARBON	5.6	5%	1/6W	
R625	1-247-768-00	CARBON	2.4	5%	1/4W	
R626	1-249-441-11	CARBON	100K	5%	1/4W	
R627	1-249-435-11	CARBON	33K	5%	1/4W	
R628	1-249-427-11	CARBON	6.8K	5%	1/4W	
R629	1-249-399-11	CARBON	33	5%	1/4W	
R630	1-249-417-11	CARBON	1K	5%	1/4W	
R631	1-249-429-11	CARBON	10K	5%	1/4W	
R632	1-249-441-11	CARBON	100K	5%	1/4W	
R634	1-249-427-11	CARBON	6.8K	5%	1/4W	
R635	1-249-441-11	CARBON	100K	5%	1/4W	
R636	1-247-903-00	CARBON	1M	5%	1/4W	
R637 ⚠	1-216-432-00	METAL OXIDE	820	5%	1W	F
R639	1-247-768-00	CARBON	2.4	5%	1/4W	
R640	1-249-419-11	CARBON	1.5K	5%	1/4W	
R641	1-249-390-11	CARBON	5.6	5%	1/6W	
R651	1-249-417-11	CARBON	1K	5%	1/4W	
R652	1-249-438-11	CARBON	56K	5%	1/4W	
R653	1-247-826-91	CARBON	620	5%	1/4W	(AV270X AEP)
R653	1-247-828-11	CARBON	750	5%	1/4W	(AV370X G)
R653	1-247-830-11	CARBON	910	5%	1/4W	(AV270X G)
R653	1-249-413-11	CARBON	470	5%	1/4W	(AV370X E)
R653	1-249-442-11	CARBON	510	5%	1/4W	(AV370X AEP, UK)
R654	1-249-423-11	CARBON	3.3K	5%	1/4W	
R655	1-249-438-11	CARBON	56K	5%	1/4W	
R656	1-249-420-11	CARBON	1.8K	5%	1/4W	
R657	1-217-151-00	RES, METAL PLATE	0.22			
R658	1-249-417-11	CARBON	1K	5%	1/4W	
R671	1-249-427-11	CARBON	6.8K	5%	1/4W	
R672	1-249-435-11	CARBON	33K	5%	1/4W	
R673	1-249-433-11	CARBON	22K	5%	1/4W	
R674	1-249-390-11	CARBON	5.6	5%	1/6W	
R675	1-247-768-00	CARBON	2.4	5%	1/4W	
R689	1-247-768-00	CARBON	2.4	5%	1/4W	
R690	1-249-419-11	CARBON	1.5K	5%	1/4W	
R691	1-249-390-11	CARBON	5.6	5%	1/6W	
R702	1-249-422-11	CARBON	2.7K	5%	1/4W	
R703 ⚠	1-216-448-11	METAL OXIDE	39	5%	2W	F
R705	1-249-423-11	CARBON	3.3K	5%	1/4W	
R706	1-249-405-11	CARBON	100	5%	1/4W	
R707	1-249-410-11	CARBON	270	5%	1/4W	
R708	1-249-389-11	CARBON	4.7	5%	1/4W	
R709	1-249-423-11	CARBON	3.3K	5%	1/4W	
R710	1-249-437-11	CARBON	47K	5%	1/4W	
R711	1-249-429-11	CARBON	10K	5%	1/4W	
R712	1-249-429-11	CARBON	10K	5%	1/4W	
R713	1-249-426-11	CARBON	5.6K	5%	1/4W	
R714	1-249-417-11	CARBON	1K	5%	1/4W	
R715	1-249-426-11	CARBON	5.6K	5%	1/4W	
R716	1-249-417-11	CARBON	1K	5%	1/4W	
R718	1-249-401-11	CARBON	47	5%	1/4W	
R721	1-249-413-11	CARBON	470	5%	1/4W	
R722	1-249-437-11	CARBON	47K	5%	1/4W	
R723	1-249-437-11	CARBON	47K	5%	1/4W	
R724	1-249-437-11	CARBON	47K	5%	1/4W	
R725	1-249-437-11	CARBON	47K	5%	1/4W	
R726	1-249-410-11	CARBON	270	5%	1/4W	
R727	1-249-429-11	CARBON	10K	5%	1/4W	
R728	1-249-417-11	CARBON	1K	5%	1/4W	
R801	1-249-389-11	CARBON	4.7	5%	1/4W	
R802	1-249-437-11	CARBON	47K	5%	1/4W	(AV370X)
R803	1-249-396-11	CARBON	18	5%	1/6W	(AV370X)
R804	1-247-739-11	CARBON	100	5%	1/2W	
R805	1-249-425-11	CARBON	4.7K	5%	1/4W	(AV370X)
		(RELAY)				
RY601	1-515-533-11	RELAY (DBFB)				
		(SWITCH)				
S601	1-506-468-11	CONNECTOR	3P, MALE			
		(TERMINAL)				
TM601	1-537-341-11	TERMINAL BOARD (8P SP)				

****

* 1-638-239-11 MUTING BOARD
****

(DIODE)

D317	8-719-313-72	DIODE SEL3810A	(AV370X)
D318	8-719-313-72	DIODE SEL3810A	
D319	8-719-313-72	DIODE SEL3810A	

(TRANSISTOR)

Q302	8-729-900-36	TRANSISTOR DTC124ES	
Q303	8-729-900-36	TRANSISTOR DTC124ES	

Note: The components identified by mark ⚠ or dotted line with mark ⚠ are critical for safety.
Replace only with part number specified.

MUTING | POWER | SPEAKER | STAND BY | TONE

Ref. No.	Part No.	Description				Remark
Q304	8-729-900-36	TRANSISTOR DTC124ES				
		(RESISTOR)				
R322	1-249-410-11	CARBON	270	5%	1/4W	
R323	1-249-410-11	CARBON	270	5%	1/4W	(AV370X)
R324	1-249-410-11	CARBON	270	5%	1/4W	
R357	1-249-429-11	CARBON	10K	5%	1/4W	
R358	1-249-429-11	CARBON	10K	5%	1/4W	(AV370X)
R359	1-249-429-11	CARBON	10K	5%	1/4W	
		(SWITCH)				
S327	1-554-303-21	SWITCH, TACTILE (DBFB) (AV370X)				
S328	1-554-303-21	SWITCH, TACTILE (MUTING) (AV370X)				
S329	1-554-303-21	SWITCH, TACTILE (SURROUND) (AV370X)				

****

* 1-638-235-11 POWER BOARD
****

	1-533-217-31	HOLDER, FUSE				
*	1-535-140-00	BASE POST 22MM (10MM PITCH) 3P				
	1-535-416-00	TERMINAL				
		(CAPACITOR)				
C901	⚠ 1-161-744-00	CERAMIC	0.01uF		400V	(AV370X)
C920	⚠ 1-161-744-00	CERAMIC	0.01uF		400V	(G)
C921	⚠ 1-161-744-00	CERAMIC	0.01uF		400V	(G)
		(TRANSFORMER)				
PT902	⚠ 1-450-358-11	TRANSFORMER, POWER (AV370X)				
		(RELAY)				
RY901	⚠ 1-515-720-11	RELAY (AV370X)				
		(VARISTOR)				
VZ901	⚠ 1-807-180-31	VARISTOR SNR-14A471U				

****

* 1-638-234-11 SPEAKER SWITCH BOARD
****

		(CAPACITOR)				
C091	1-164-089-11	CERAMIC	0.0022uF		50V	
C092	1-164-089-11	CERAMIC	0.0022uF		50V	
		(SWITCH)				
S601	1-571-485-11	SWITCH, PUSH (2 KEY) (SPEAKERS)				

****

* 1-638-236-11 STAND BY BOARD (AV370X)
****

Ref. No.	Part No.	Description				Remark
		(CONNECTOR)				
CNS302 *	1-568-951-11	PIN, CONNECTOR 2P (AV370X)				
		(SWITCH)				
S330	1-554-303-21	SWITCH, TACTILE (POWER) (AV370X)				

****

* A-4341-733-A TONE BOARD, COMPLETE (AEP, UK, E)

* A-4341-734-A TONE BOARD, COMPLETE (G)
****

		(CAPACITOR)				
C501	1-130-489-00	MYLAR	0.033uF	5%	50V	
C502	1-124-250-00	ELECT	0.15uF	20%	50V	
C503	1-130-481-00	MYLAR	0.0068uF	5%	50V	
C504	1-130-489-00	MYLAR	0.033uF	5%	50V	
C505	1-126-163-11	ELECT	4.7uF	20%	50V	
C506	1-124-925-11	ELECT	2.2uF	20%	100V	
C507	1-101-880-00	CERAMIC	47PF	5%	50V	
C509	1-124-903-11	ELECT	1uF	20%	50V	
C510	1-130-489-00	MYLAR	0.033uF	5%	50V	
C512	1-124-464-11	ELECT	0.22uF	20%	50V	
C513	1-124-464-11	ELECT	0.22uF	20%	50V	
C514	1-136-163-00	MYLAR	0.068uF	10%	50V	
C515	1-102-106-00	CERAMIC	100PF	10%	50V	
C551	1-130-489-00	MYLAR	0.033uF	5%	50V	
C552	1-124-250-00	ELECT	0.15uF	20%	50V	
C553	1-130-481-00	MYLAR	0.0068uF	5%	50V	
C554	1-130-489-00	MYLAR	0.033uF	5%	50V	
C555	1-126-163-11	ELECT	4.7uF	20%	50V	
C556	1-124-925-11	ELECT	2.2uF	20%	100V	
C557	1-101-880-00	CERAMIC	47PF	5%	50V	
C559	1-124-903-11	ELECT	1uF	20%	50V	
C560	1-130-489-00	MYLAR	0.033uF	5%	50V	
C565	1-102-106-00	CERAMIC	100PF	10%	50V	
		(CONNECTOR)				
CNS552 *	1-568-826-11	SOCKET, CONNECTOR 7P				
CNS553 *	1-568-830-11	SOCKET, CONNECTOR 11P				
		(DIODE)				
D502	8-719-987-63	DIODE 1N4148M				
		(IC)				
IC501	8-759-112-93	IC uPC4570HA-1				

Note: The components identified by mark ⚠ or dotted line with mark ⚠ are critical for safety.
Replace only with part number specified.

TONE TUNER

Ref. No.	Part No.	Description	Remark
		(TRANSISTOR)	
Q501	8-729-202-67	TRANSISTOR 2SK246GR3	
Q502	8-729-620-05	TRANSISTOR 2SC2603-EF	
Q504	8-729-202-67	TRANSISTOR 2SK246GR3	
Q505	8-729-900-36	TRANSISTOR DTC124ES	
Q506	8-729-900-63	TRANSISTOR DTA124ES	
Q551	8-729-202-67	TRANSISTOR 2SK246GR3	
Q552	8-729-620-05	TRANSISTOR 2SC2603-EF	
		(RESISTOR)	
R501	1-249-429-11	CARBON 10K 5% 1/4W	
R502	1-249-421-11	CARBON 2.2K 5% 1/4W	
R503	1-249-441-11	CARBON 100K 5% 1/4W	
R504	1-249-427-11	CARBON 6.8K 5% 1/4W	
R505	1-249-438-11	CARBON 56K 5% 1/4W	
R506	1-249-441-11	CARBON 100K 5% 1/4W	
R507	1-247-883-00	CARBON 150K 5% 1/4W	
R508	1-249-417-11	CARBON 1K 5% 1/4W	
R509	1-249-412-11	CARBON 390 5% 1/4W	
R510	1-249-427-11	CARBON 6.8K 5% 1/4W	
R518	1-249-441-11	CARBON 100K 5% 1/4W	
R519	1-249-441-11	CARBON 100K 5% 1/4W	
R520	1-247-903-00	CARBON 1M 5% 1/4W	
R521	1-249-427-11	CARBON 6.8K 5% 1/4W	
R522	1-247-903-00	CARBON 1M 5% 1/4W	
R551	1-249-429-11	CARBON 10K 5% 1/4W	
R552	1-249-421-11	CARBON 2.2K 5% 1/4W	
R553	1-249-441-11	CARBON 100K 5% 1/4W	
R554	1-249-427-11	CARBON 6.8K 5% 1/4W	
R555	1-249-438-11	CARBON 56K 5% 1/4W	
R556	1-249-441-11	CARBON 100K 5% 1/4W	
R557	1-247-883-00	CARBON 150K 5% 1/4W	
R558	1-249-417-11	CARBON 1K 5% 1/4W	
R559	1-249-412-11	CARBON 390 5% 1/4W	
R560	1-249-427-11	CARBON 6.8K 5% 1/4W	
		(VARIABLE RESISTOR)	
RV501	1-241-407-11	RES, VAR, CARBON 100K/100K (BALANCE)	
RV503	1-241-406-11	RES, VAR, CARBON 100K/100K (BASS)	
RV504	1-241-406-11	RES, VAR, CARBON 100K/100K (TREBLE)	

****

* A-4341-740-A TUNER BOARD, COMPLETE (AEP, UK)

* A-4341-741-A TUNER BOARD, COMPLETE (G)

* A-4341-742-A TUNER BOARD, COMPLETE (E)

****

Ref. No.	Part No.	Description	Remark
		(CAPACITOR)	
C1	1-163-141-00	CERAMIC CHIP 0.001uF 5% 50V	
C2	1-124-477-11	ELECT 47uF 20% 25V	
C3	1-164-232-11	CERAMIC CHIP 0.01uF 50V	
C4	1-163-141-00	CERAMIC CHIP 0.001uF 5% 50V	
C5	1-164-232-11	CERAMIC CHIP 0.01uF 50V	
C6	1-164-232-11	CERAMIC CHIP 0.01uF 50V(G)	
C10	1-163-037-11	CERAMIC CHIP 0.022uF 10% 25V	
C21	1-161-021-11	CERAMIC 0.047uF 10% 25V	
C22	1-164-232-11	CERAMIC CHIP 0.01uF 50V	
C23	1-124-477-11	ELECT 47uF 20% 25V	
C24	1-123-382-00	ELECT 3.3uF 20% 100V	
C25	1-164-232-11	CERAMIC CHIP 0.01uF 50V	
C26	1-163-019-00	CERAMIC CHIP 0.0068uF 10% 50V	
C27	1-163-125-00	CERAMIC CHIP 220PF 5% 50V(G)	
C28	1-124-903-11	ELECT 1uF 20% 50V	
C29	1-163-117-00	CERAMIC CHIP 100PF 5% 50V(AEP, UK, E)	
C29	1-163-133-00	CERAMIC CHIP 470PF 5% 50V(G)	
C30	1-124-903-11	ELECT 1uF 20% 50V	
C31	1-124-902-00	ELECT 0.47uF 20% 50V	
C32	1-124-463-00	ELECT 0.1uF 20% 50V	
C33	1-130-481-00	MYLAR 0.0068uF 5% 50V(AEP, G, UK)	
C33	1-130-482-00	MYLAR 0.0082uF 5% 50V(AV370X E)	
C34	1-123-382-00	ELECT 3.3uF 20% 100V	
C35	1-130-481-00	MYLAR 0.0068uF 5% 50V(AEP, G, UK)	
C35	1-130-482-00	MYLAR 0.0082uF 5% 50V(AV370X E)	
C36	1-123-382-00	ELECT 3.3uF 20% 100V	
C37	1-124-907-11	ELECT 10uF 20% 50V	
C39	1-164-232-11	CERAMIC CHIP 0.01uF 50V	
C40	1-124-463-00	ELECT 0.1uF 20% 50V	
C41	1-124-927-11	ELECT 4.7uF 20% 100V	
C42	1-164-232-11	CERAMIC CHIP 0.01uF 50V	
C43	1-126-176-11	ELECT 220uF 20% 10V	
C44	1-164-232-11	CERAMIC CHIP 0.01uF 50V	
C45	1-123-382-00	ELECT 3.3uF 20% 100V	
C46	1-164-161-11	CERAMIC CHIP 0.0022uF 10% 100V	
C48	1-123-382-00	ELECT 3.3uF 20% 100V	
C49	1-164-161-11	CERAMIC CHIP 0.0022uF 10% 100V	
C51	1-124-477-11	ELECT 47uF 20% 25V	
C61	1-163-037-11	CERAMIC CHIP 0.022uF 10% 25V	
C62	1-163-037-11	CERAMIC CHIP 0.022uF 10% 25V	
C63	1-163-037-11	CERAMIC CHIP 0.022uF 10% 25V	
C64	1-163-037-11	CERAMIC CHIP 0.022uF 10% 25V	
C81	1-102-961-00	CERAMIC 27PF 5% 50V	
C82	1-102-961-00	CERAMIC 27PF 5% 50V	
C83	1-164-232-11	CERAMIC CHIP 0.01uF 50V	
C84	1-164-232-11	CERAMIC CHIP 0.01uF 50V	
C85	1-164-232-11	CERAMIC CHIP 0.01uF 50V	
C86	1-124-477-11	ELECT 47uF 20% 25V	
C87	1-164-232-11	CERAMIC CHIP 0.01uF 50V	

TUNER

Ref. No.	Part No.	Description			Remark
C101	1-124-925-11	ELECT	2.2uF	20%	100V
C102	1-124-463-00	ELECT	0.1uF	20%	50V
C104	1-164-232-11	CERAMIC CHIP	0.01uF		50V
C105	1-124-477-11	ELECT	47uF	20%	25V
		〈 FILTER 〉			
CF1	1-567-389-11	FILTER, CERAMIC			
CF2	1-567-389-11	FILTER, CERAMIC			
CF3	1-567-389-11	FILTER, CERAMIC (G)			
CF21	1-577-075-11	OSCILLATOR, CERAMIC			
		〈 TRANSFORMER 〉			
CFT21	1-404-853-11	TRANSFORMER, IF			
		〈 CONNECTOR 〉			
CNJ1	* 1-569-795-11	HOUSING, CONNECTOR 10P			
CNJ2	* 1-580-803-11	HOUSING, CONNECTOR 7P			
		〈 FRONT-END 〉			
FE1	1-465-006-21	FRONT-END (FM 2 GANG)(AEP, UK, E)			
FE1	1-465-007-11	FRONT-END (FM 4 GANG)(G)			
FE61	1-236-461-11	ENCAPSULATED COMPONENT			
		〈 IC 〉			
IC21	8-759-821-45	IC LA1851N			
IC81	8-759-820-91	IC LC7218			
		〈 INDUCTOR 〉			
L21	1-410-494-11	INDUCTOR 1MMH			
		〈 FILTER 〉			
LPF21	1-235-164-00	FILTER, LOW PASS			
LPF22	1-235-164-00	FILTER, LOW PASS			
		〈 TRANSISTOR 〉			
Q1	8-729-230-XX	TRANSISTOR 2SC2669OY-TPE4			
Q2	8-729-230-XX	TRANSISTOR 2SC2669OY-TPE4 (G)			
Q21	8-729-119-78	TRANSISTOR 2SC2785-HFE			
Q22	8-729-119-78	TRANSISTOR 2SC2785-HFE			
Q23	8-729-900-61	TRANSISTOR DTA114ES			
Q24	8-729-900-80	TRANSISTOR DTC114ES			
Q81	8-729-900-61	TRANSISTOR DTA114ES			
Q82	8-729-900-80	TRANSISTOR DTC114ES			
Q83	8-729-202-67	TRANSISTOR 2SK246GR3			
Q84	8-729-230-93	TRANSISTOR 2SC3113-AB			
		〈 RESISTOR 〉			
R1	1-249-401-11	CARBON	47	5%	1/4W
R3	1-216-037-00	METAL CHIP	330	5%	1/10W (G)
R4	1-216-013-00	METAL CHIP	33	5%	1/10W(AEP, UK, E)
R4	1-216-037-00	METAL CHIP	330	5%	1/10W (G)
R5	1-216-013-00	METAL CHIP	33	5%	1/10W(AEP, UK, E)
R5	1-216-037-00	METAL CHIP	330	5%	1/10W (G)
R6	1-216-037-00	METAL CHIP	330	5%	1/10W
R7	1-216-109-00	METAL CHIP	330K	5%	1/10W
R8	1-216-013-00	METAL CHIP	33	5%	1/10W (G)
R9	1-216-037-00	METAL CHIP	330	5%	1/10W (G)
R10	1-216-109-00	METAL CHIP	330K	5%	1/10W (G)
R21	1-249-404-00	CARBON	82	5%	1/4W
R22	1-249-462-11	CARBON	22K	5%	1/4W
R23	1-216-049-00	METAL CHIP	1K	5%	1/10W
R24	1-216-085-00	METAL CHIP	33K	5%	1/10W
R25	1-216-071-00	METAL CHIP	8.2K	5%	1/10W
R27	1-249-461-11	CARBON	18K	5%	1/4W
R28	1-247-719-11	CARBON	3.3K	5%	1/4W
R29	1-216-073-00	METAL CHIP	10K	5%	1/10W
R31	1-216-041-00	METAL CHIP	470	5%	1/10W
R32	1-216-073-00	METAL CHIP	10K	5%	1/10W
R33	1-216-073-00	METAL CHIP	10K	5%	1/10W
R35	1-216-089-00	METAL CHIP	47K	5%	1/10W
R37	1-216-109-00	METAL CHIP	330K	5%	1/10W
R39	1-216-057-00	METAL CHIP	2.2K	5%	1/10W
R40	1-216-055-00	METAL CHIP	1.8K	5%	1/10W
R41	1-216-067-00	METAL CHIP	5.6K	5%	1/10W
R42	1-216-109-00	METAL CHIP	330K	5%	1/10W
R44	1-216-057-00	METAL CHIP	2.2K	5%	1/10W
R45	1-216-055-00	METAL CHIP	1.8K	5%	1/10W
R46	1-216-067-00	METAL CHIP	5.6K	5%	1/10W
R47	1-249-409-11	CARBON	220	5%	1/4W
R61	1-216-097-00	METAL CHIP	100K	5%	1/10W
R62	1-216-089-00	METAL CHIP	47K	5%	1/10W
R63	1-216-009-00	METAL CHIP	22	5%	1/10W
R81	1-216-049-00	METAL CHIP	1K	5%	1/10W
R82	1-216-049-00	METAL CHIP	1K	5%	1/10W
R83	1-216-049-00	METAL CHIP	1K	5%	1/10W
R84	1-216-049-00	METAL CHIP	1K	5%	1/10W
R85	1-216-073-00	METAL CHIP	10K	5%	1/10W
R86	1-216-049-00	METAL CHIP	1K	5%	1/10W
R87	1-216-073-00	METAL CHIP	10K	5%	1/10W
R88	1-216-065-00	METAL CHIP	4.7K	5%	1/10W
R89	1-216-049-00	METAL CHIP	1K	5%	1/10W
R90	1-216-073-00	METAL CHIP	10K	5%	1/10W
R91	1-216-049-00	METAL CHIP	1K	5%	1/10W
R92	1-249-401-11	CARBON	47	5%	1/4W
R101	1-216-061-00	METAL CHIP	3.3K	5%	1/10W
R102	1-216-043-00	METAL CHIP	560	5%	1/10W
R103	1-216-049-00	METAL CHIP	1K	5%	1/10W
R104	1-216-035-00	METAL CHIP	270	5%	1/10W
R105	1-216-065-00	METAL CHIP	4.7K	5%	1/10W
R106	1-216-057-00	METAL CHIP	2.2K	5%	1/10W

Ref. No.	Part No.	Description	Remark
R107	1-216-065-00	METAL CHIP 4.7K 5% 1/10W	
R108	1-216-025-00	METAL CHIP 100 5% 1/10W	
R109	1-216-065-00	METAL CHIP 4.7K 5% 1/10W	
R110	1-249-405-11	CARBON 100 5% 1/4W	
		〈 VARIABLE RESISTOR 〉	
RV21	1-238-015-11	RES, ADJ, CARBON 4.7K	
RV23	1-238-021-11	RES, ADJ, CARBON 220K	
RV24	1-238-017-11	RES, ADJ, CARBON 22K	
		〈 TRANSFORMER 〉	
T21	1-404-807-11	TRANSFORMER, DISCRIMINATOR	
T23	1-235-126-00	ENCAPSULATED COMPONENT (G)	
		〈 TERMINAL 〉	
TM1	* 1-537-264-21	TERMINAL BOARD (E)	
TM1	* 1-537-288-11	TERMINAL BOARD (PAL)(AEP, G, UK)	
		〈 TEST PIN 〉	
TP1	* 1-560-060-00	PIN, CONNECTOR 2P	
		〈 VIBRATOR 〉	
XT81	1-577-126-11	VIBRATOR, CRYSTAL	

****

* 1-638-950-11 VOL BOARD
****

		〈 CAPACITOR 〉	
C517	1-124-464-11	ELECT 0.22uF 20% 50V (AV370X)	
C518	1-124-464-11	ELECT 0.22uF 20% 50V (AV370X)	
		〈 VARIABLE RESISTOR 〉	
RV502	1-241-405-11	RES, VAR, CARBON 100K/100K (VOLUME) (AV370X)	
RV502	1-241-408-11	RES, VAR, CARBON 100K/100K (VOLUME) (AV270X)	

****

ACCESSORIES & PACKING MATERIALS
****

	1-465-423-11	REMOTE COMMANDER (RM-S103) (AV370X:AEP, G, E)
	1-465-809-11	REMOTE COMMANDER (RM-U211) (AV370X: UK)
	1-501-369-21	ANTENNA (AEP, UK)
	1-501-374-51	ANTENNA, LOOP
	1-569-008-11	ADAPTOR, CONVERSION 2P (E)
	2-181-754-01	COVER, BATTERY (for RM-S103)
	3-707-584-01	COVER, BATTERY (for RM-U211)
	3-753-021-41	MANUAL, INSTRUCTION (AEP)(GERMAN, FRENCH, DUTCH, SWEDISH, SPANISH, ITALIAN)
	3-753-021-51	MANUAL, INSTRUCTION (G)(GERMAN)
	3-753-021-61	MANUAL, INSTRUCTION (UK)(ENGLISH)
	3-753-021-71	MANUAL, INSTRUCTION (E) (ENGLISH, FRENCH, SPANISH, CHINESE)
*	4-943-615-01	CUSHION
*	4-944-450-01	INDIVIDUAL CARTON (AV370X: AEP, UK, G)
*	4-944-451-01	INDIVIDUAL CARTON (AV370X: E)
*	4-944-452-01	INDIVIDUAL CARTON (AV270X)

****

HARDWARE LIST

#1	7-682-547-04	SCREW +BVTT 3X6 (S)
#2	7-682-548-04	SCREW +BVTT 3X8 (S)
#3	7-682-560-04	SCREW +BVTT 4X6 (S)
#4	7-685-650-79	SCREW +BVTP 3X16 TYPE2 IT-3
#5	7-682-547-09	SCREW +BVTT 3X6 (S)
#6	7-685-647-79	SCREW +BVTP 3X10 TYPE2 N-S
#7	7-685-534-19	SCREW +BTP2.6X8 TYPE2 (AV370X E)

English
93G0504-2 (2)
Printed in Japan
© 1991. 7

9-956-563-11

Sony Corporation
Audio Group

Published by Audio Sector Quality Assurance Dept.