ST-5055

Canada and USA Model

FM STEREO/FM-AM TUNER

SPECIFICATIONS

FM TUNER SECTION

Antenna:	300 ohms balanced 75 ohms unbalanced
Tuning range:	87.5 to 108 MHz
Usable sensitivity:	2.2 μV IHF 1.7 μV (S/N = 30 dB)
S/N ratio:	68 dB
Frequency response:	30 Hz to 15 kHz $^{+1}_{-3}$ dB
Harmonic distortion:	Mono: 0.4 % at 400 Hz 100 % Mod. Stereo: 0.6 % at 400 Hz 100 % Mod.
Fm stereo separation:	Greater than 35 dB at 400 Hz

A-M TUNER SECTION

Antenna:	Built-in ferrite bar antenna with external antenna provision
Tuning range:	530 to 1,605 kHz
Sensitivity:	46 dB/m, built-in antenna 100 μV, external antenna
Harmonic distortion:	0.5 %

AUDIO SECTION

Audio output and impedance:	FIXED: 750 mV (10 k ohms) VARIABLE: 0 to 1.5 V (* 1.8 k ohms)

* **Note:** at maximum output

GENERAL

Power requirements:	120 V 60 Hz ac
Power consumption:	Approx. 23 watts
Dimensions:	412 (w) x 120 (h) x 284 (d) mm 16¼ (w) x 4¾ (h) x 11¼ (d) inches
Net weight:	4.9 kg (10 lb 13 oz)
Shipping weight:	6.8 kg (15 lb)

SONY®

SERVICE MANUAL

www.hifiengine.com

TABLE OF CONTENTS

Section	Title	Page
	SERVICING NOTES	1
1.	TECHNICAL DESCRIPTION	
	1-1. Specifications	2
	1-2. Newly Adopted Circuit Description	2
	1-3. Block Diagram	5
2.	DISASSEMBLY AND REPLACEMENT	
	2-1. Front Panel Removal	6
	2-2. Lamp Replacement	6
	2-3. Dial Cord Restringing	6
	2-4. Front Subchassis Removal	7
	2-5. Printed Circuit Board Removal	8
	2-6. Switch Replacement	8
3.	ALIGNMENT AND ADJUSTMENT	
	3-1. FM I-F Alignment	9
	3-2. FM Frequency Coverage and Tracking Alignment	10
	3-3. Muting Adjustment	10
	3-4. Tuner Input Meter Calibration	11
	3-5. FM Stereo Separation Adjustment	11
	3-6. A-M Frequency Coverage and Tracking Alignment	13
4.	REPACKING	14
5.	DIAGRAMS	
	5-1. Mounting Diagram	15
	5-2. Schematic Diagram	17
6.	EXPLODED VIEWS	19
7.	ELECTRICAL PARTS LIST	22

www.hifiengine.com

SERVICING NOTES

1. CAUTIONS ON HANDLING IC's

a. Excessive heat may destroy an IC. Never reinstall a used IC.

b. Check the related components for defects before replacing the IC.

c. When installing new IC's, do not apply excessive heat. Solder quickly while holding a wet rag on the heat-sink tab as shown in Fig. A.

d. Do not short adjacent IC leads when performing electrical checks as this might damage the IC.

e. Always solder the IC heat sink to the printed circuit board to avoid damage.

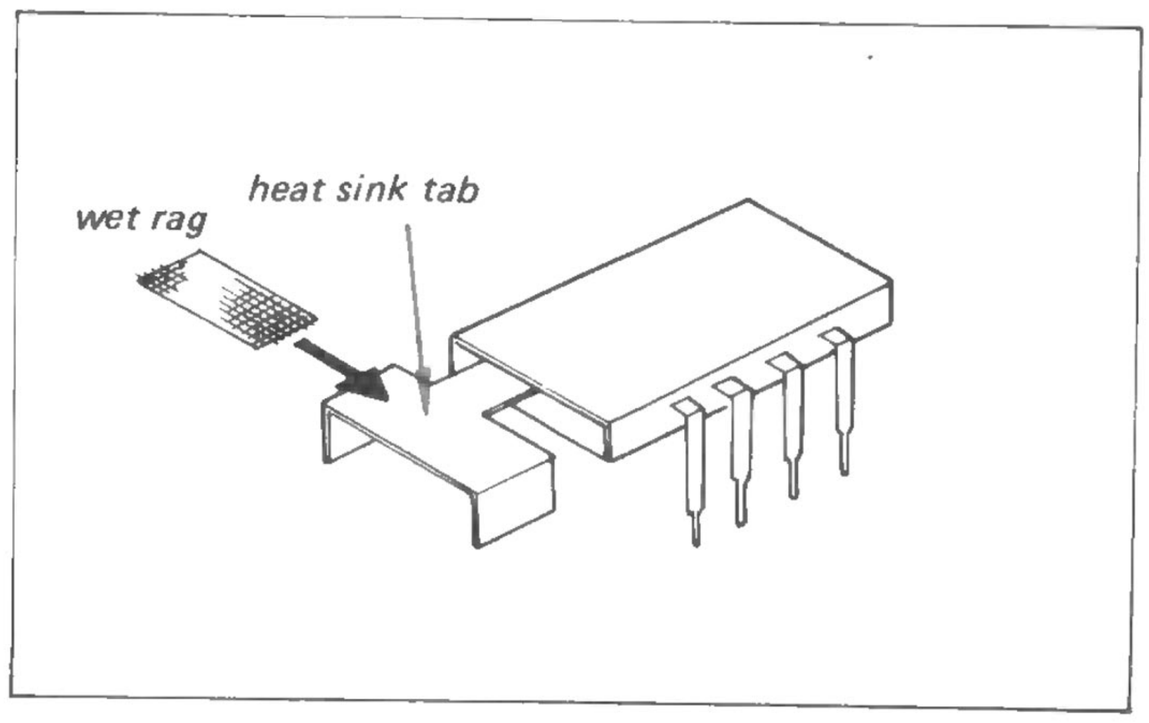

Fig. A. IC installation

2. NYLON RIVET REMOVAL

a. To remove the nylon rivet, push its end with a tweezers as shown in Fig. B.

b. To reinstall the rivet, insert the flared part into the opening first, then push its head as far as it will go.

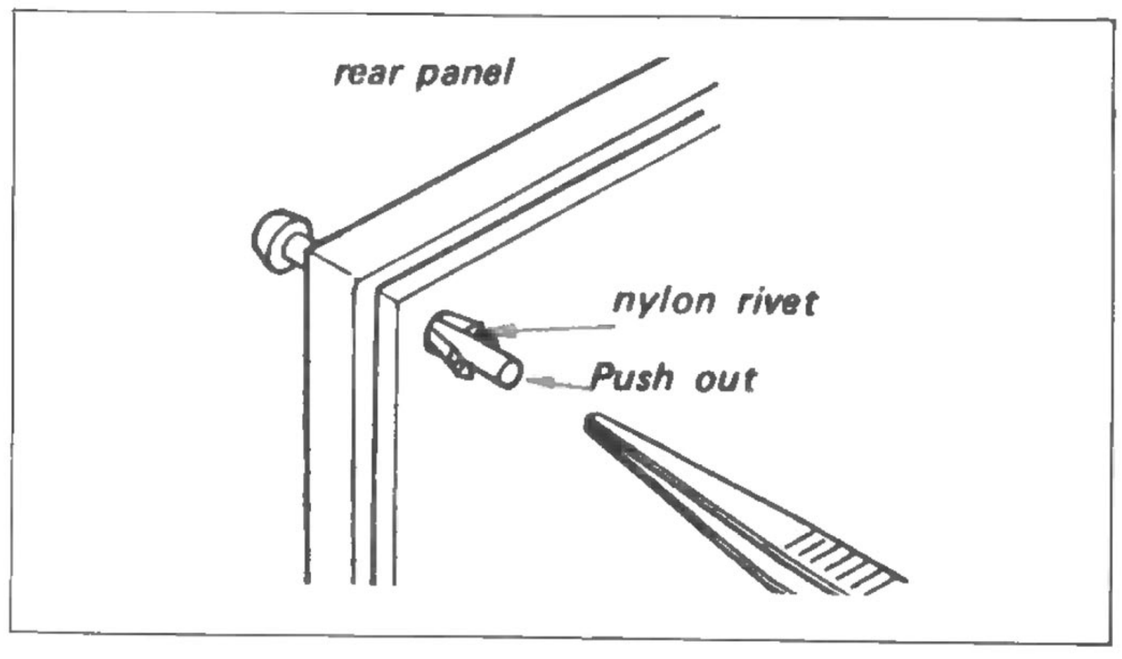

Fig. B. Nylon rivet removal

3. FM DISCRIMINATOR AND I-F STRIP ALIGNMENT

SONY developed new component for fm discriminator circuit which eliminates conventional discriminator transformer.
Fm demodulation is performed by combination of special ceramic filter and inductor shown in Fig. C. Therefore no adjustment is required in the field. But note the color mark on the top, since the ceramic filters or inductor in the fm i-f circuit are selected according to their specified center frequencies as described in Section 3.

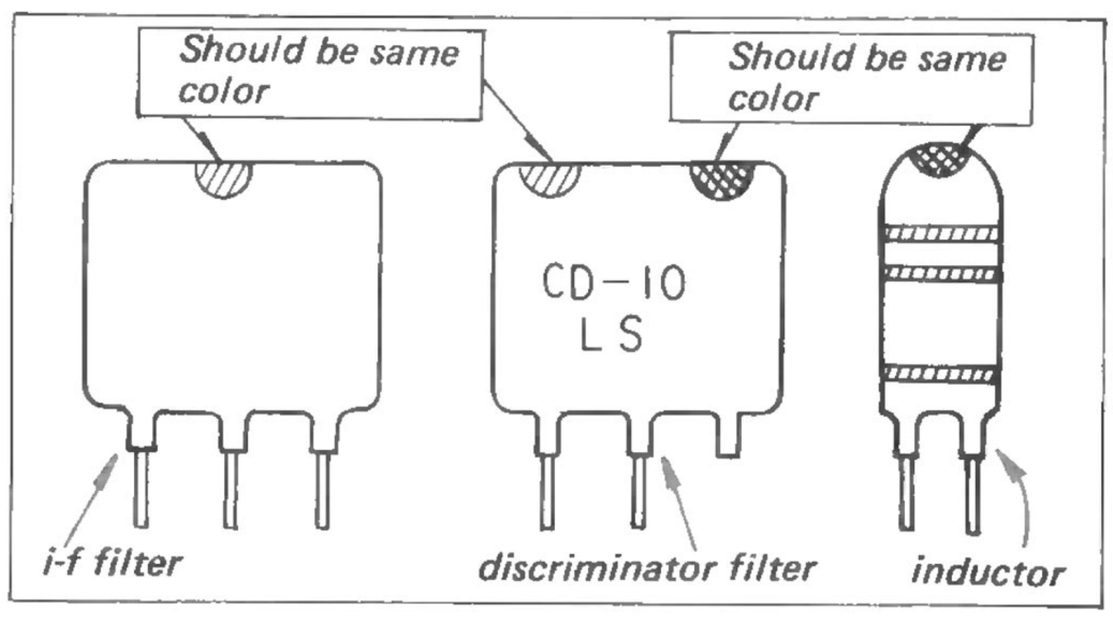

Fig. C Filter and discriminator components

4. A-M I-F STRIP ALIGNMENT

The i-f transformers of AM band (CFT 401, L406) are adjusted at the factory, so very little adjustment is necessary in the field, even if replacing any of these i-f transformers.

5. ELECTRICAL CHECK

Remove the mask plate at the bottom for quick electrical checks shown in Fig. D.

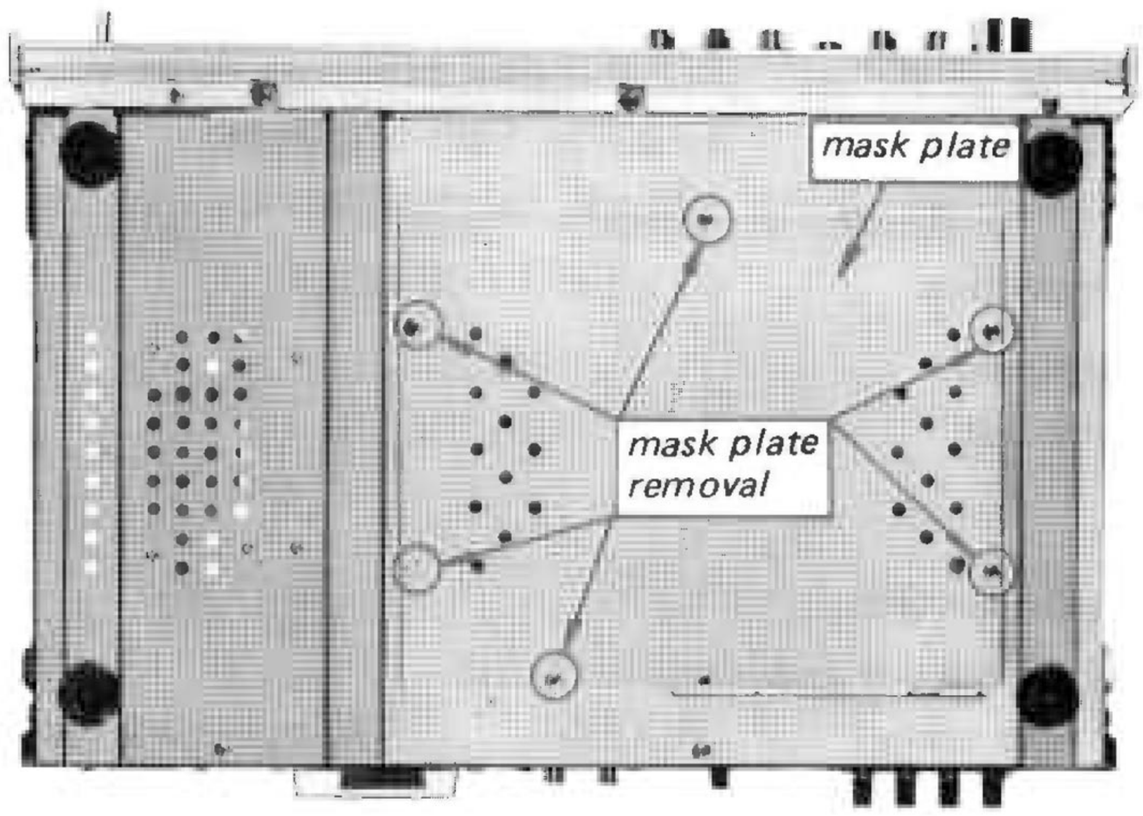

Fig. D Mask plate removal

www.hifiengine.com

SECTION 1
TECHNICAL DESCRIPTION

1-1. SPECIFICATIONS

Fm Tuner Section

Antenna:	300 ohms balanced 75 ohms unbalanced
Tuning range:	87.5 to 108 MHz
Intermediate frequency:	10.7 MHz
Usable sensitivity:	2.2 μV IHF 1.7 μV (S/N = 30 dB)
S/N ratio:	68 dB
Capture ratio:	1.0 dB
Selectivity:	70 dB IHF
Image rejection:	45 dB
I-f rejection:	95 dB
Spurious rejection:	75 dB
A-m suppression:	45 dB IHF
Frequency response:	30 Hz to 15 kHz $^{+}_{-}\frac{1}{3}$ dB
Harmonic distortion:	Mono: 0.4 % at 400 Hz 100 % Mod. Stereo: 0.6 % at 400 Hz 100 % Mod.
Fm stereo separation:	Greater than 35 dB at 400 Hz
19 kHz, 38 kHz suppression:	40 dB

A-m Tuner Section

Intermediate frequency:	455 kHz
Antenna:	Built-in ferrite bar antenna with external antenna provision
Tuning range:	530 to 1,605 kHz
Sensitivity:	46 dB/m, built-in antenna 100 μV, external antenna
I-f rejection:	65 dB at 1,000 kHz
Harmonic distortion:	0.5 %

Audio Section

Audio output and impedance:	FIXED: 750 mV(10 k ohms) VARIABLE: 0 to 1.5V (* 1.8 k ohms) * **Note:** at maximum output

General

Power requirements:	120 V 60 Hz ac
Power consumption:	Approx, 23 watts
Dimensions:	412 (w) x 120 (h) x 284 (d) mm 16¼ (w) x 4¾ (h) x 11¼ (d) inches
Net weight:	4.9 kg (10 lb 13 oz)
Shipping weight:	6.8 kg (15 lb)

1-2. NEWLY ADOPTED CIRCUIT DESCRIPTION

1. Fm I-f IC Amp (IC201)

This amplifies only selected signals passed by ceramic filters and provides power to drive fm detector circuit. IC201 also functions as buffer amplifier for the muting circuit. Fig. 1-1 shows the IC block diagram.

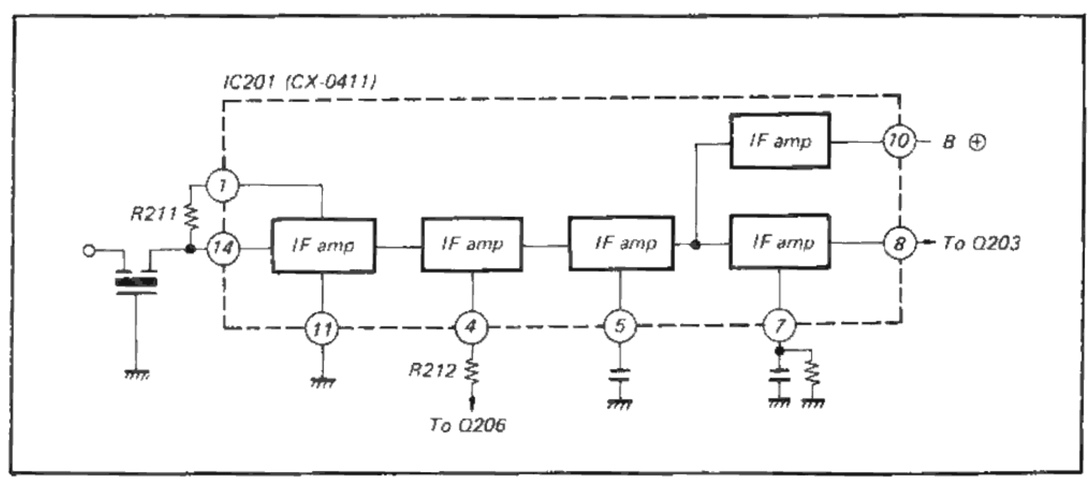

Fig. 1-1. IC diagram (IC201)

2. Fm Discriminator

Fig. 1-2 (a) shows the newly designed fm discriminator circuit which operates as follows:
To simplify the discussion, assume that

$\dot{V}1$ . . . . . input signal (10.7 MHz, fm signal)
$\dot{V}2$ . . . . . signal output at collector circuit of Q203.
$\dot{V}3$ . . . . . signal output at emitter circuit of Q203.
$\dot{V}4$ . . . . . signal output at the connection point of L202 and CF203.
V5 . . . . . signal output at D205 cathode.
V6 . . . . . signal output at D206 anode.
V7 . . . . . audio signal output; V7 = V5 – V6

Note: Dot represents phasor.

www.hifiengine.com

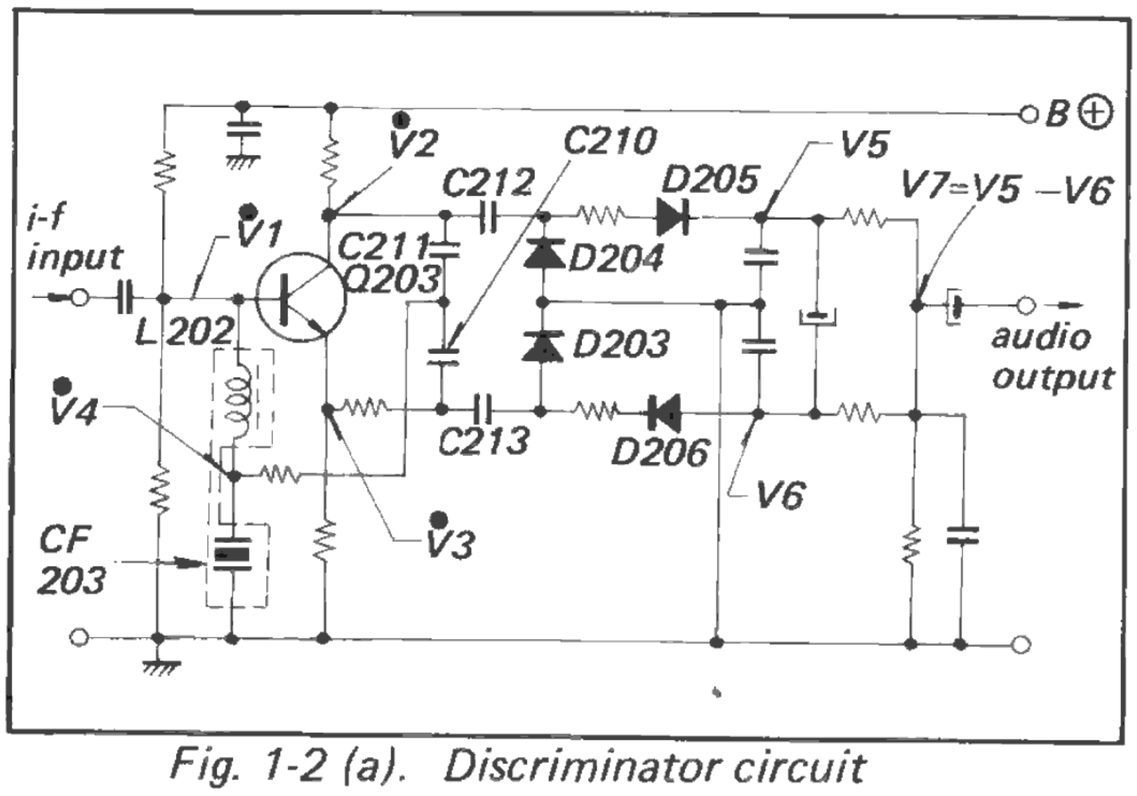

Fig. 1-2 (a). Discriminator circuit

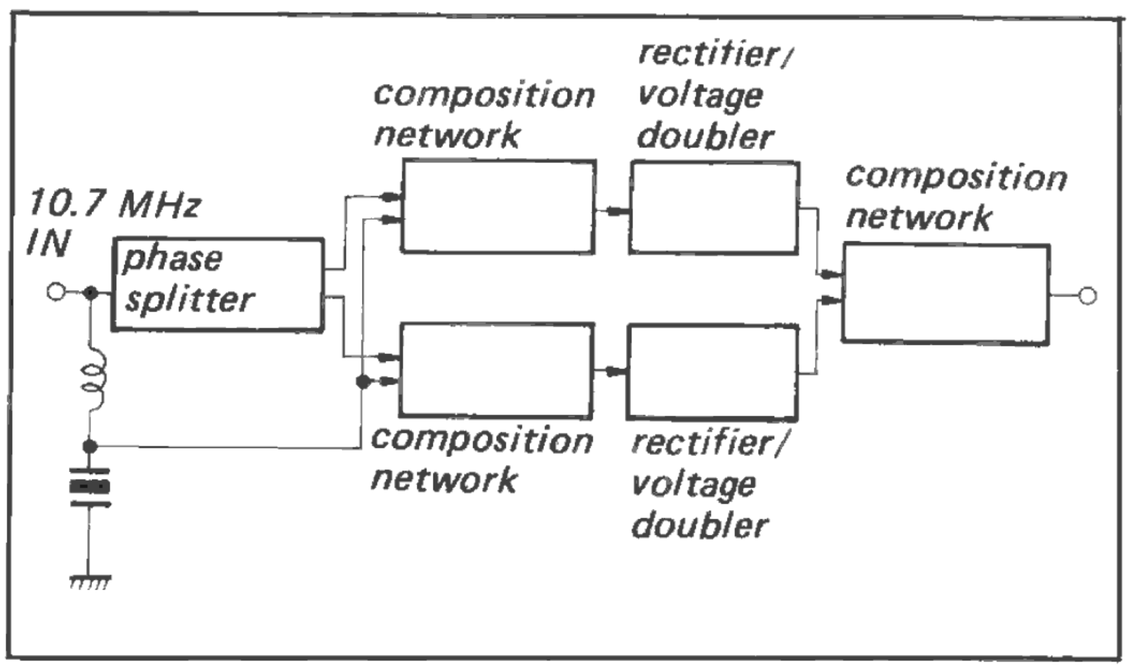

Fig. 1-2 (b). Discriminator block diagram

The relation between signal phasors are shown in Fig. 1-3. Referring to Fig. 1-3, input signal is splitted into $\dot{V}2$ and $\dot{V}3$ at Q203. $\dot{V}4$ is added to $\dot{V}2$ and $\dot{V}3$ through C211 or C210, then rectified by voltage doublers and converted into V5 and V6 respectively. V5 and V6 changes corresponding to the phase shift of $\dot{V}4$ due to frequency modulation. Thus an audio signal (V5-V6) is detected.

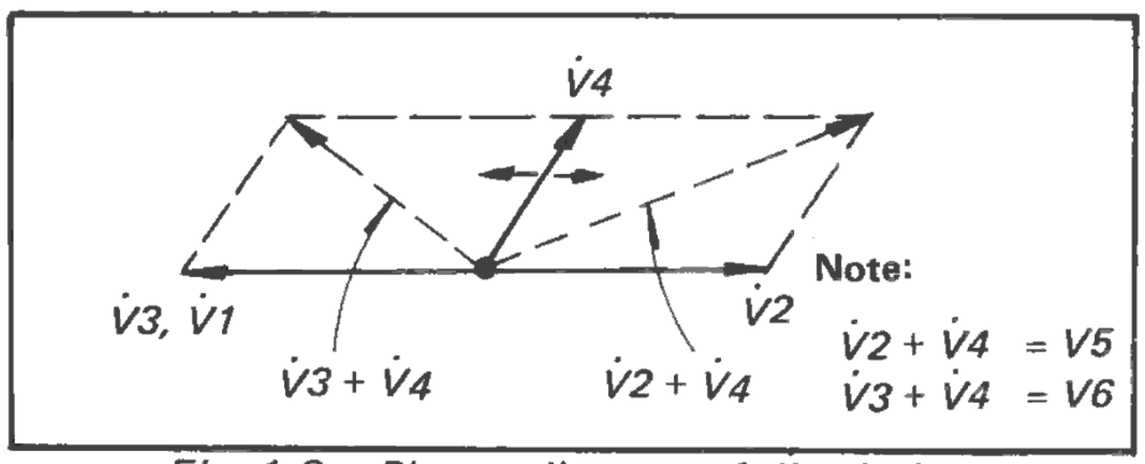

Fig. 1-3. Phasor diagram of discriminator

3. Muting/TUNER INPUT METER Circuit

Refer to Fig. 1-4.

The i-f signal is extracted from the output circuit of IC201 and fed to Q206 through C204. Q206 increases i-f signal level to drive the rectifier D207 through tuned circuit T201. T201 determines the bandwidth (about 150 kHz) necessary to control the muting circuit without generating interstation noise. The output of the rectifier is a positive dc voltage proportional to the carrier level of weak rf signals and delivered to both switching circuit and TUNER INPUT meter.

Note that RT201 calibrates the TUNER INPUT meter. Q207 and Q208 form a switching circuit and drive the IC301 MPX decoder muting circuit through MUTING switch S3. Detail of IC301 will be described later. With the MUTING switch ON, fm signals of average strength keep Q207 saturated, thus cutting off Q208. This has no effect on IC301 operation. Weak stations and interstation noises cannot produce sufficient dc voltage at the base of Q207 to keep it conducting. As a result Q208 conducts and operates the muting circuit in the IC301 (MPX decoder). Note that the muting circuit does not short the output but decreases output signal about 20 dB.

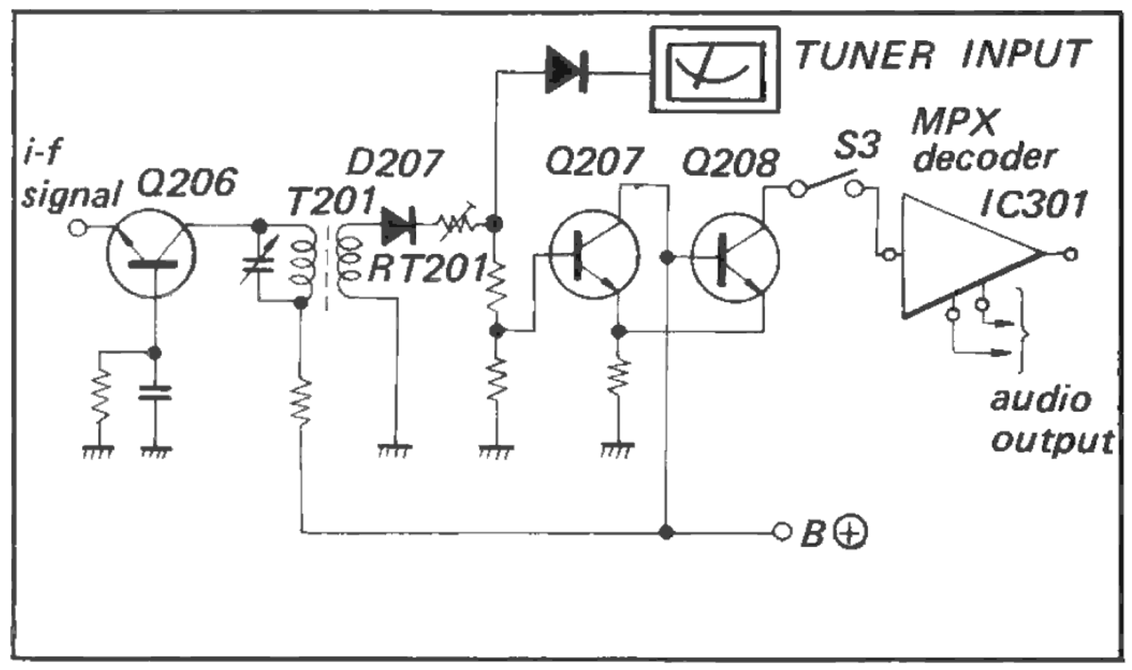

Fig. 1-4. Muting circuit

4. MPX Decoder Section

Refer to Fig. 1-5.

The composite stereo signal is applied to terminal 6 , which is the input of the pilot/composite separator. The composite signal is directed to the switching demodulator circuit, and also fed to the doubler/19 kHz tuned-amp circuit which generates 38 kHz pulses. 38 kHz pulses are waveshaped by the 38 kHz tuned amplifier and supplied to the switching circuit through a limiter for sampling drive operation. "L" and "R" components are developed at the switching circuit and supplied to terminal 11 and 12 respectively. The stereo demodulation principle is shown in Fig. 1-6. RT301 controls separation.

The stereo lamp lights when a stereo signal exists. The doubler output is fed to the stereo/mono changeover circuit. The circuit actuates the stereo lamp switch, lighting the STEREO lamp. This also controls the operation of the switching circuit. When a monaural signal is received, this circuit forces the switching circuit into conduction, enabling the monaural signal operation. Moreover, since the doubler output and muting circuit form an OR circuit, weak stereo signals also produce the monaural mode. Thus, the hiss and noise caused by weak stereo stations are eliminated by forcing the decoder operation into the mono mode.

www.hifiengine.com

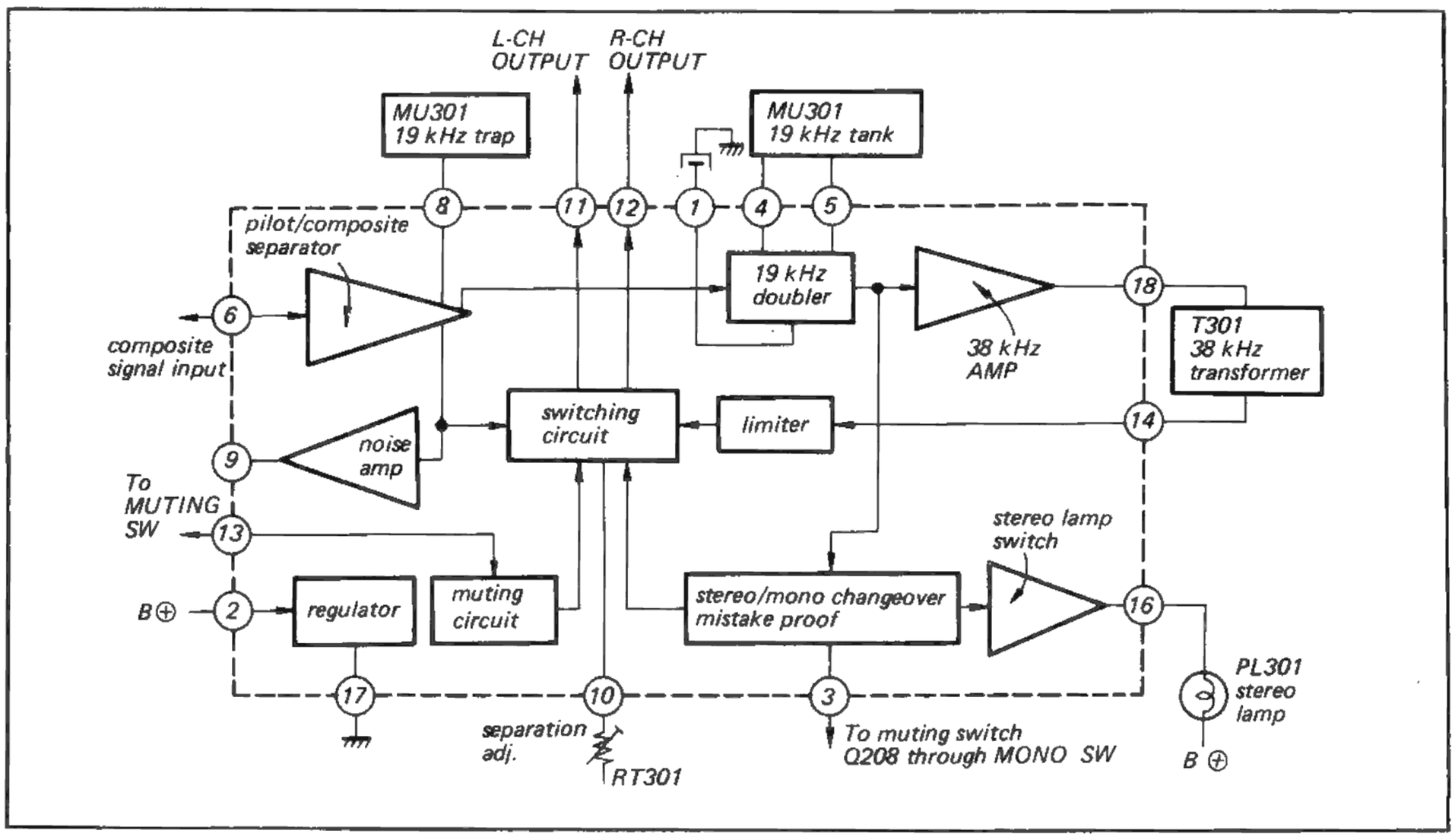

Fig. 1-5. IC diagram (IC301)

5. A-m Tuner Section

AGC circuit

Referring to Fig. 1-7, there are three feedback loops ensuring proper agc operation. Reverse agc is applied to Q403, Q402 and Q401.

The a-m i-f signal is detected by D401 and a negative dc voltage roughly proportional (not exactly due to agc action) to the carrier levels of the input signal is fed back to Q403 base. This controls the bias current of Q403 thereby its emitter voltage.

Emitter voltage of Q403 is fed back to the base circuit of Q402 (mixer) through secondary winding of oscillator coil and rf coil.

Since Q402 and Q401 are in series, agc voltage controls the current flow in both transistor.

AGC operates as follows:

When strong signal is received, current flow in Q403, Q402 and Q401 decreases since base bias is decreased due to agc circuit.

Lower current flow reduces the gain of each transistor thereby maintains stable operation.

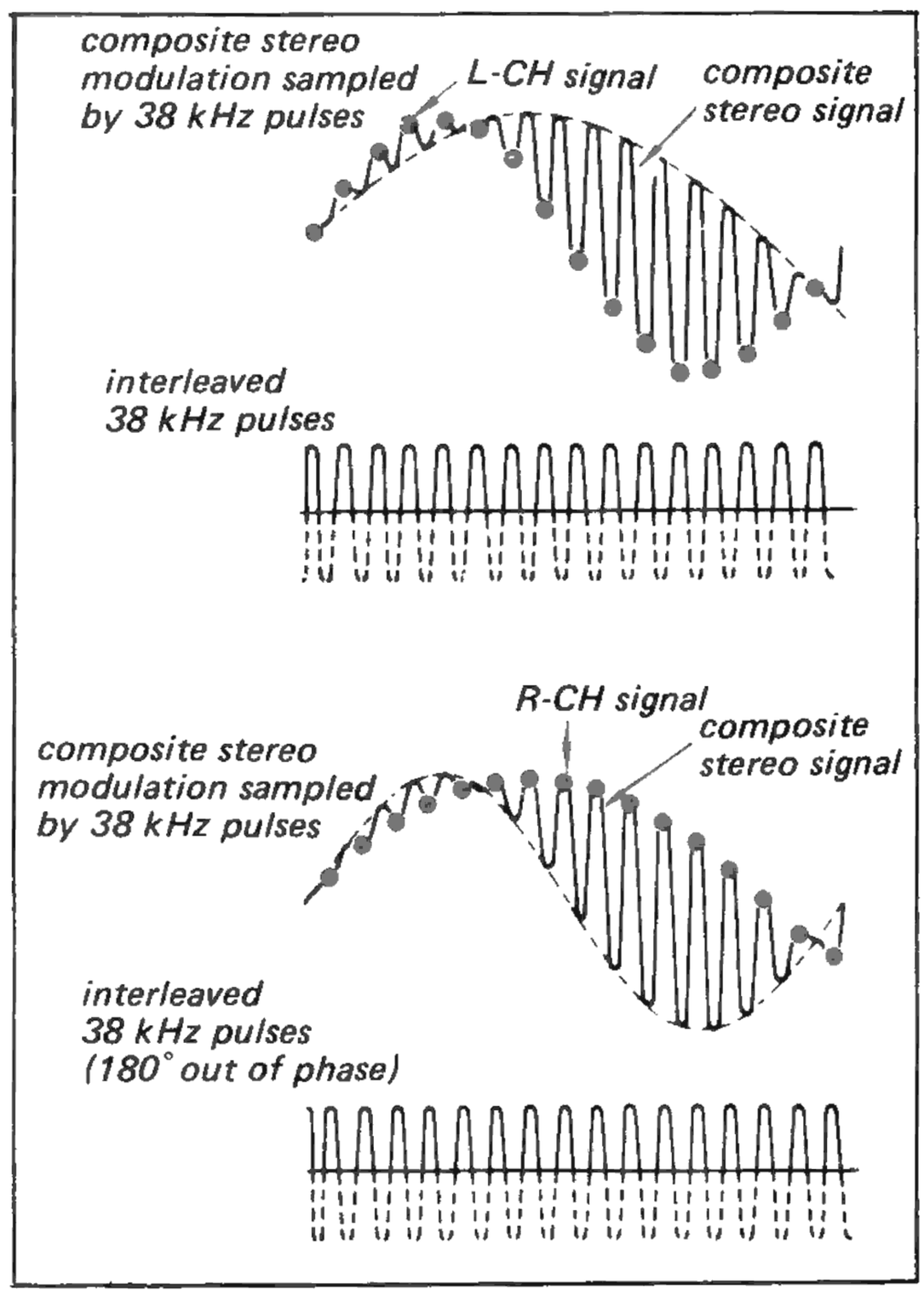

Fig. 1-6. Stereo demodulation operation

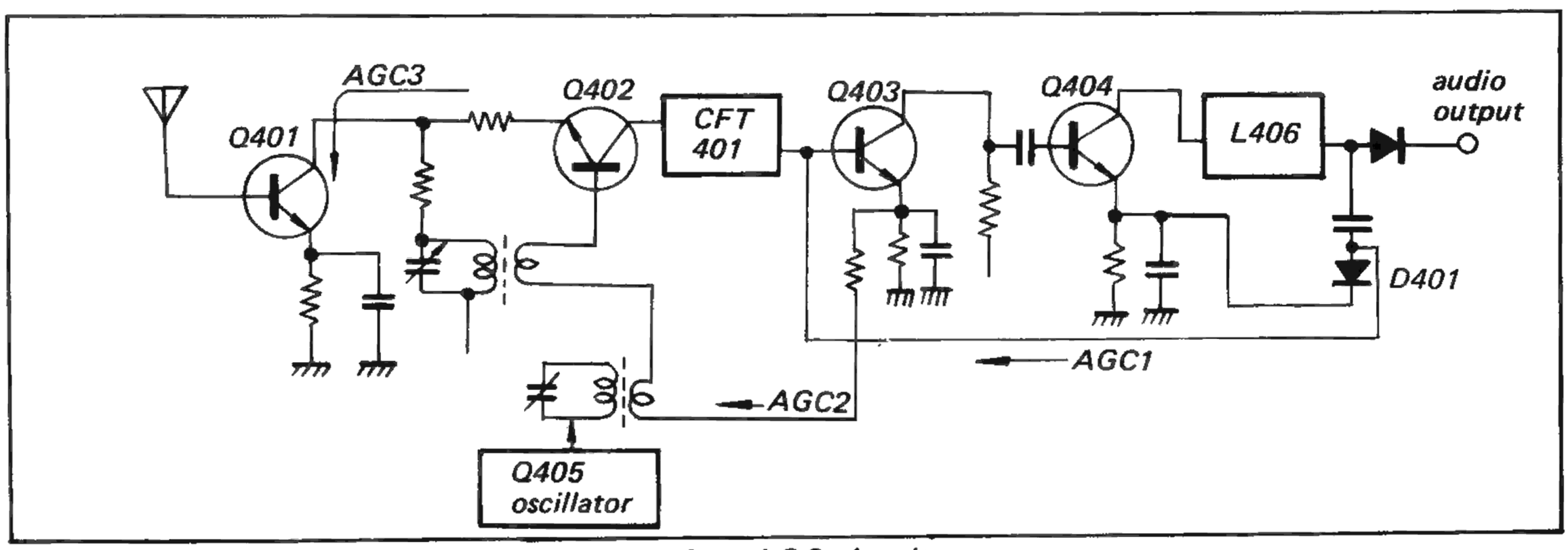

Fig. 1-7. A-m AGC circuit

www.hifiengine.com

1-3. BLOCK DIAGRAM

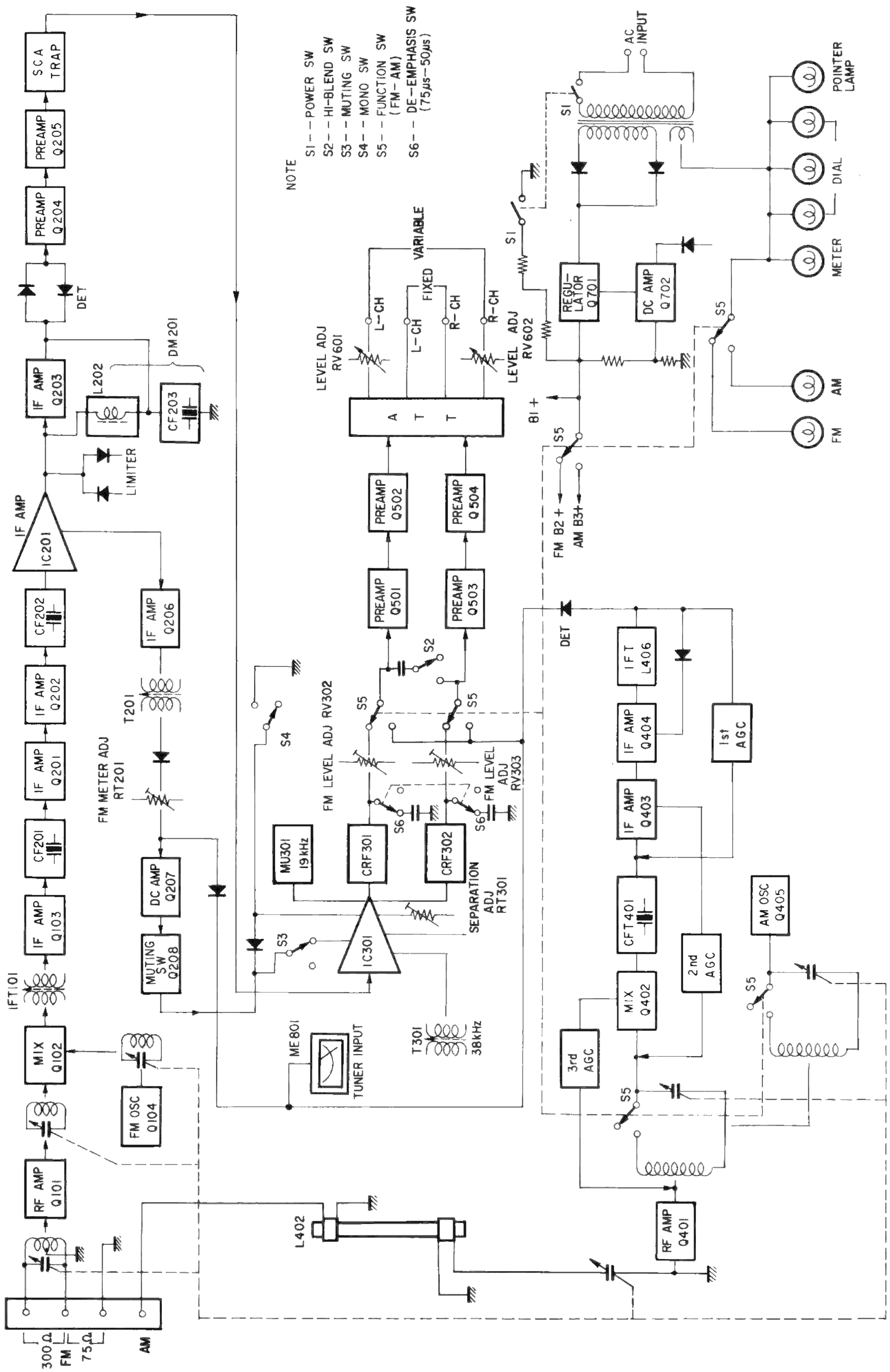

SECTION 2

DISASSEMBLY AND REPLACEMENT

Note: All screws in this service manual are Phillips type (cross recess type) unless otherwise indicated.

2-1. FRONT PANEL REMOVAL

1. Remove the two screws at both sides of the wooden case. This frees wooden case.
2. Remove the two screws from the bottom and one screw at both sides as shown in Fig. 2-1 and 2-2. This frees front panel.

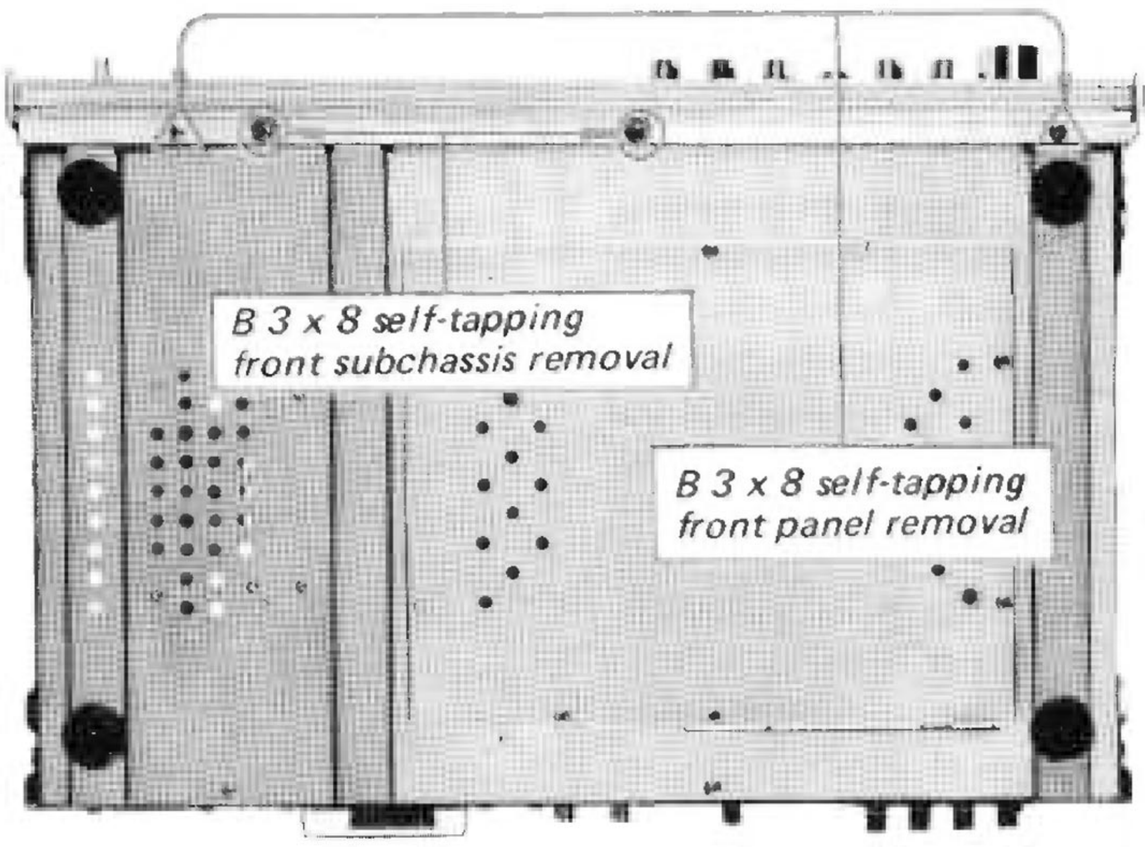

Fig. 2-1 Bottom view

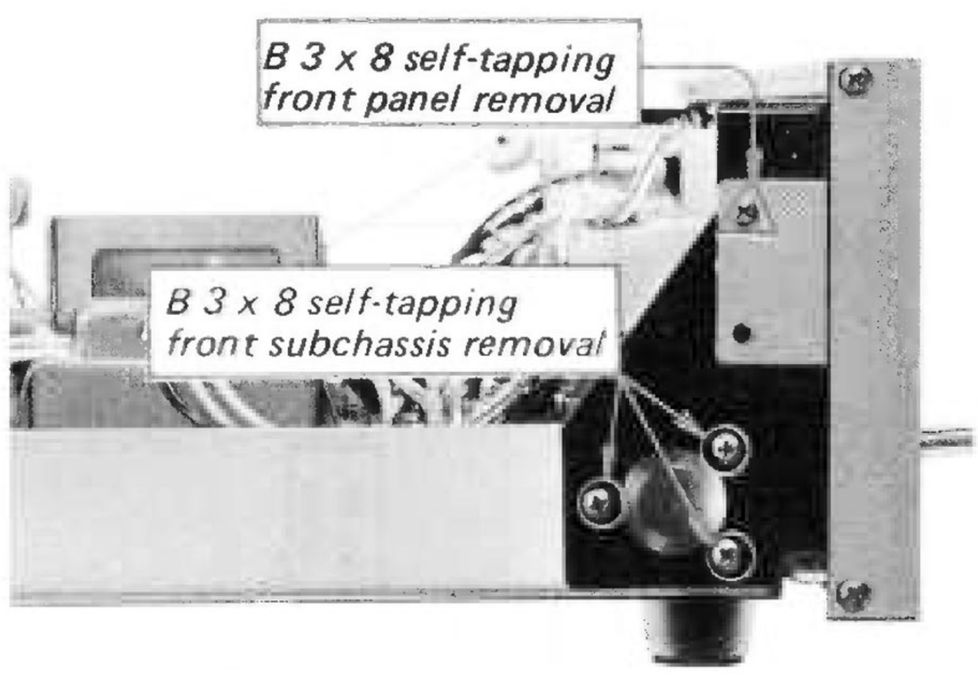

Fig. 2-2. Side view

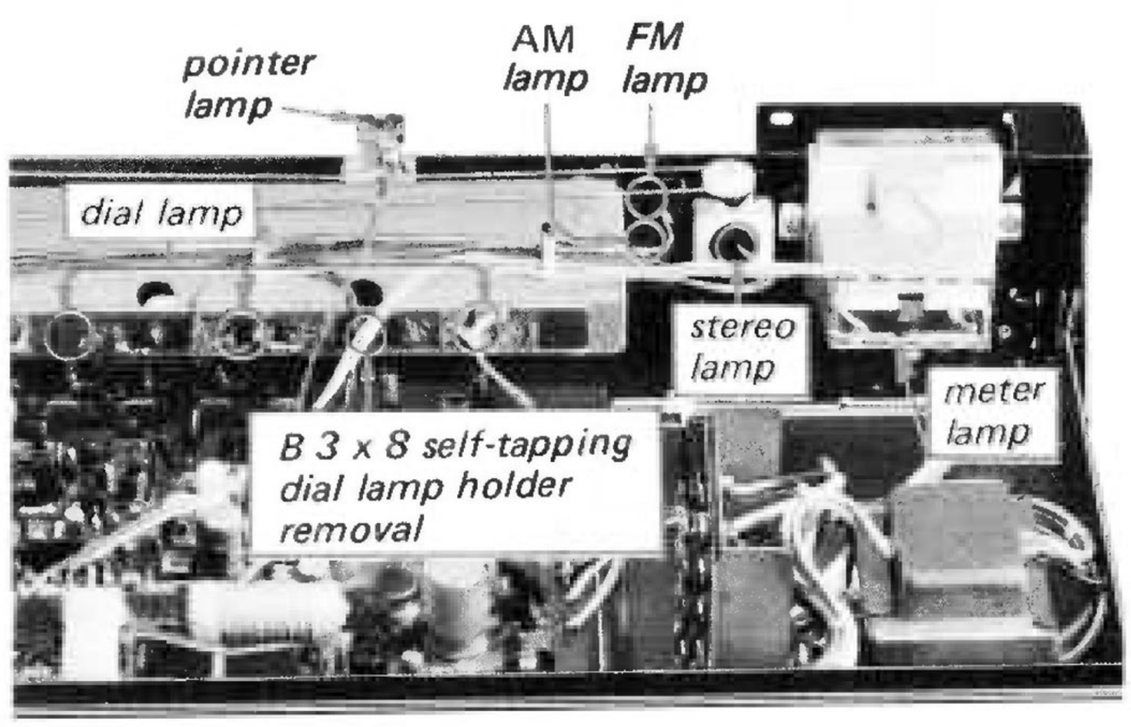

Fig. 2-3. Dial lamp replacement

2-2. LAMP REPLACEMENT

Dial Lamp

1. Remove the screw securing the dial lamp holder to its shade shown in Fig. 2-3.
   This frees the holder.

Meter Lamp

1. Straighten the flat spring, then pull it up as shown in Fig. 2-4. This frees the meter lamp holder.

2-3. DIAL CORD RESTRINGING

Preparation

1. Cut a 1250 mm(51-inch)length of 0.3 mm (1/64-inch) diameter dial cord.
2. Tie the end of the cord to a spring as shown in Fig. 2-5.
3. Rotate the tuning capacitor drum fully clockwise (minimum capacitance position).

Procedure

1. Referring to Fig. 2-5, proceed the stringing in numerical order as shown.

   Note: Refer to the Fig. 2-6, for wrapping the cord around the drum.
   At the finish point of stringing, tighten the cord so that the spring is under tension, and squeeze the eyelet.

2. After completing the dial cord stringing, make sure that the tuning system works properly.
3. Apply a drop of contact cement to the finish point.

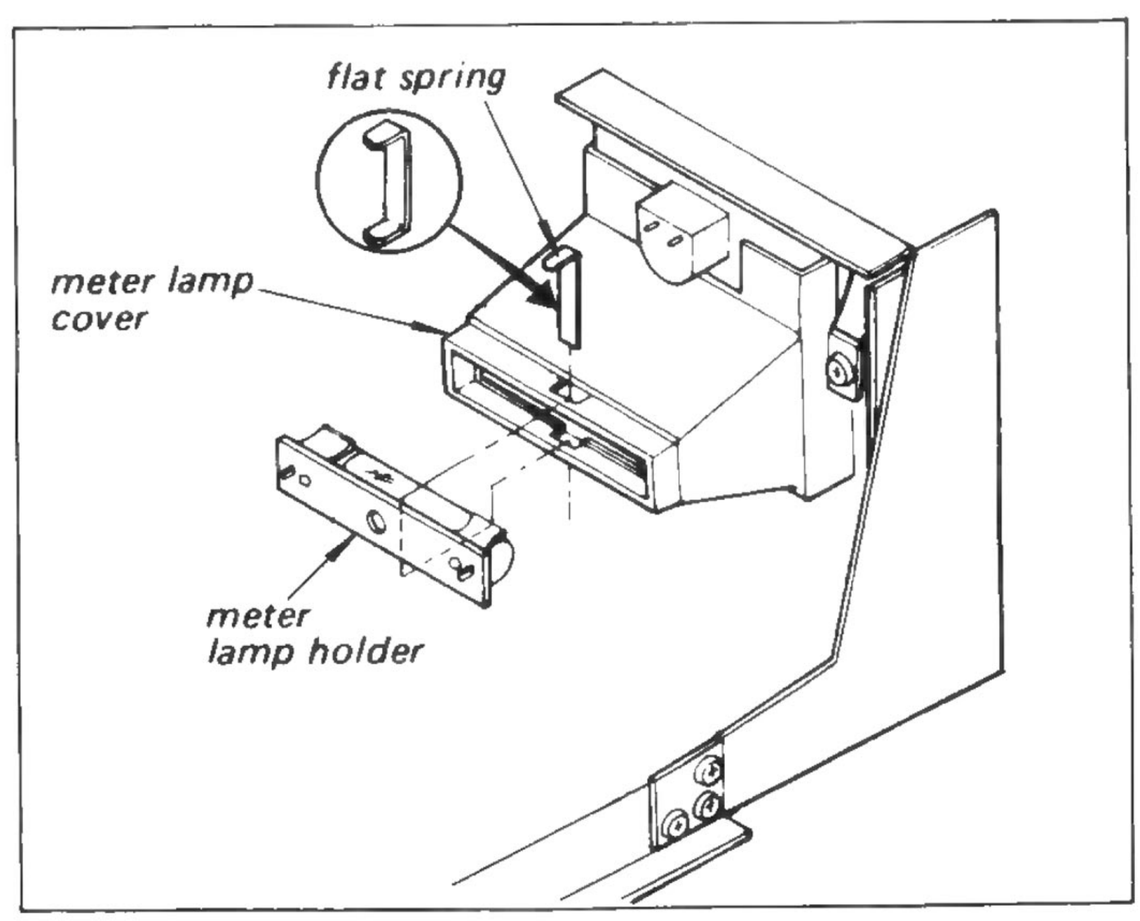

Fig. 2-4. Meter lamp replacement

4. Put the dial pointer on the cord as shown in Fig. 2-7, and tune the set to the local fm station. Move the dial pointer to the position where the dial indication coincides with the local station carrier frequency.

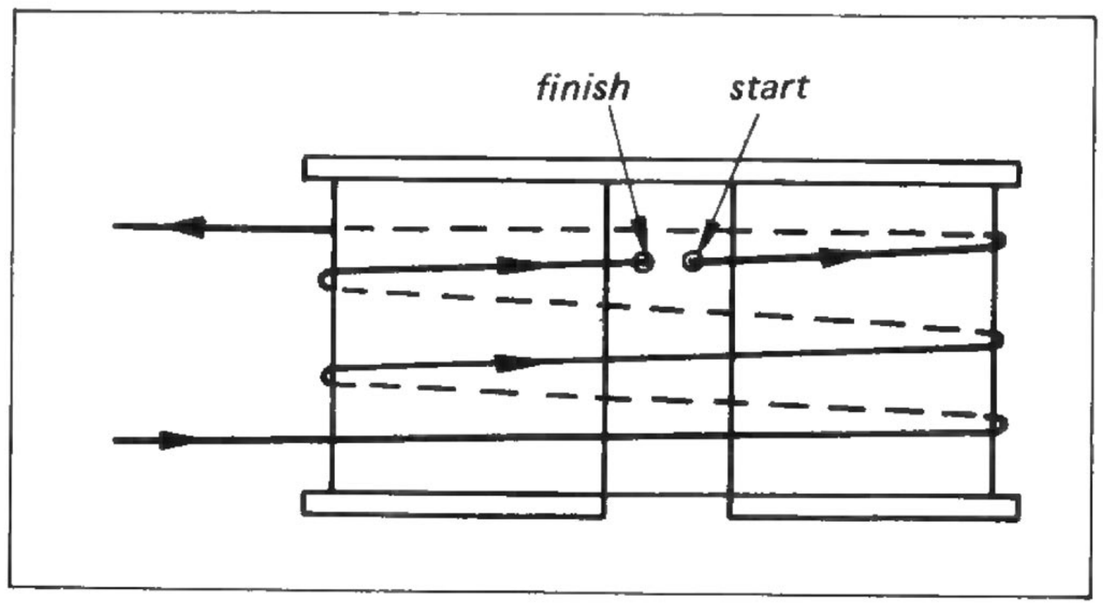

Fig 2-6. Wrapping the dial cord

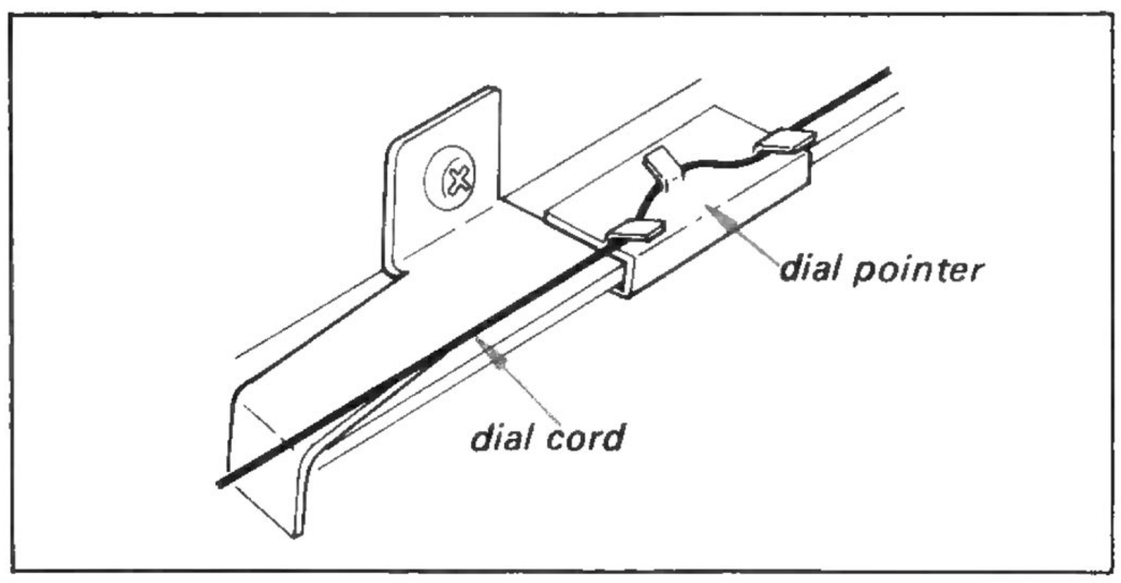

Fig. 2-7. Dial pointer installation

2-4. FRONT SUBCHASSIS REMOVAL

Preparation

1. Fix the dial cord to the drum by using a cellophane tape.
2. Remove the tuning capacitor drum.
3. Remove the front panel as described in Procedure 2-1.

Procedure

1. Remove the two screws from front bottom of the chassis shown in Fig. 2-1.
2. Remove the three screws at both sides of the chassis as shown in Fig. 2-2.
3. Remove the two screws shown in Fig. 2-8. This frees the front subchassis with dial cord.

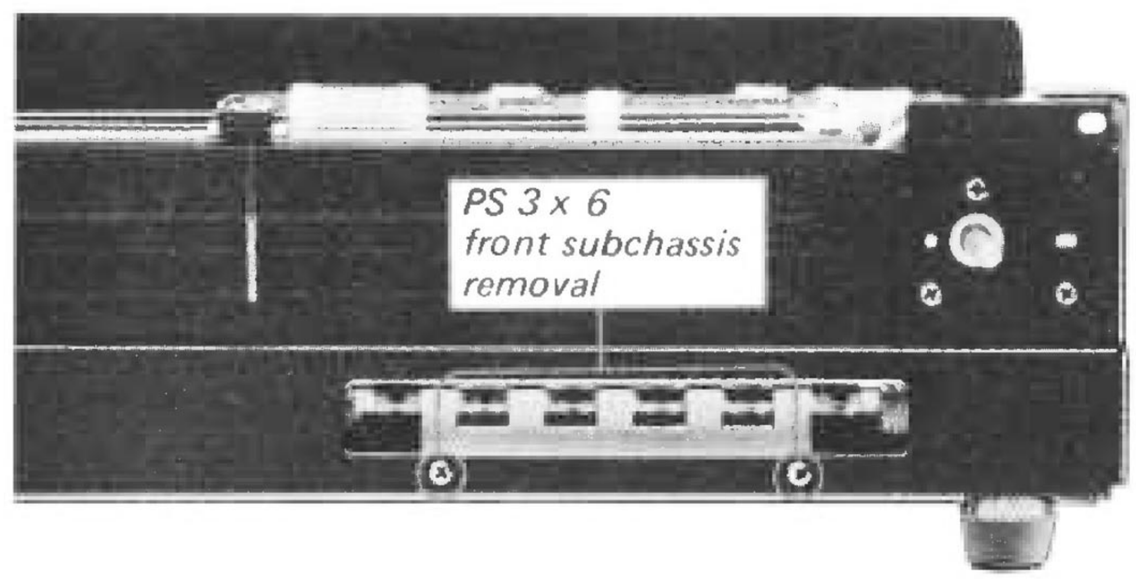

Fig. 2-8. Front subchassis removal

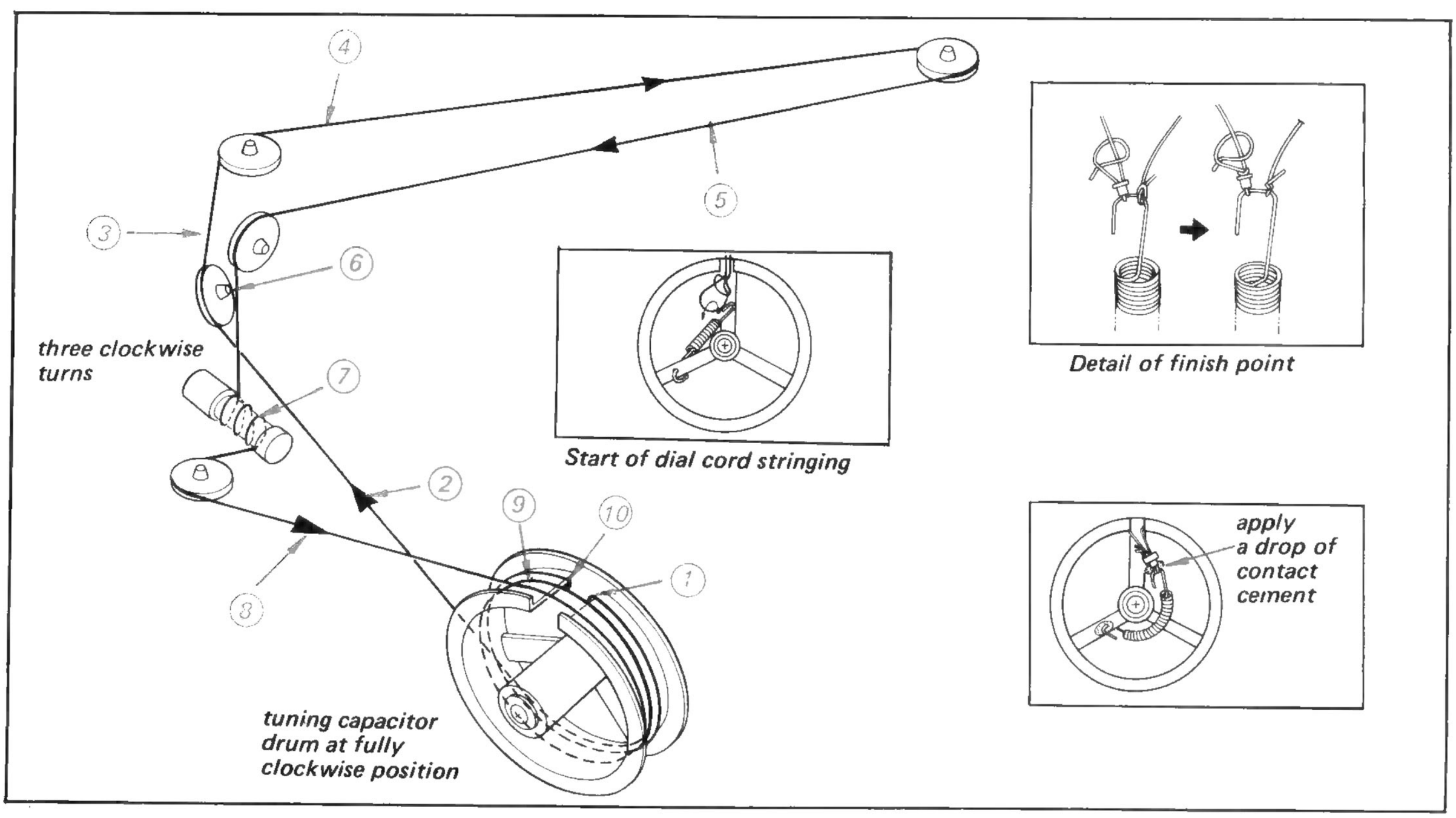

Fig. 2-5. Dial cord stringing

2-5. PRINTED CIRCUIT BOARD REMOVAL

1. Remove the front subchassis as described in Procedure 2-4.
2. Remove the four screws shown in Fig. 2-9. This frees the printed circuit board.

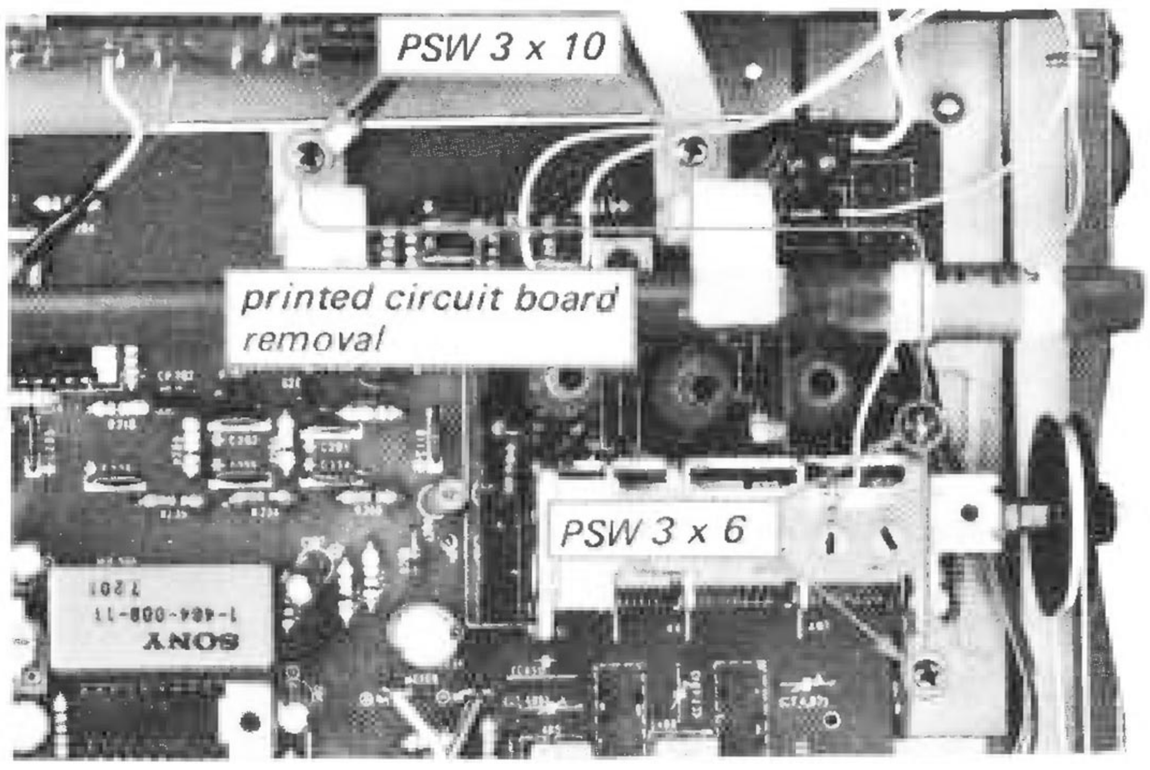

Fig. 2-9. Printed circuit board removal

2-6. SWITCH REPLACEMENT

Pushbutton Switch (6-key)

1. Remove the printed circuit board as described in Procedure 2-5.
2. Remove the switch bracket by taking out the three screws shown in Fig. 2-10.
3. Remove the two screws from the bottom as shown in Fig. 2-10.
4. With a soldering iron having a solder sucking tip, clean the solder from each lug of the switches.
5. Install a new one.

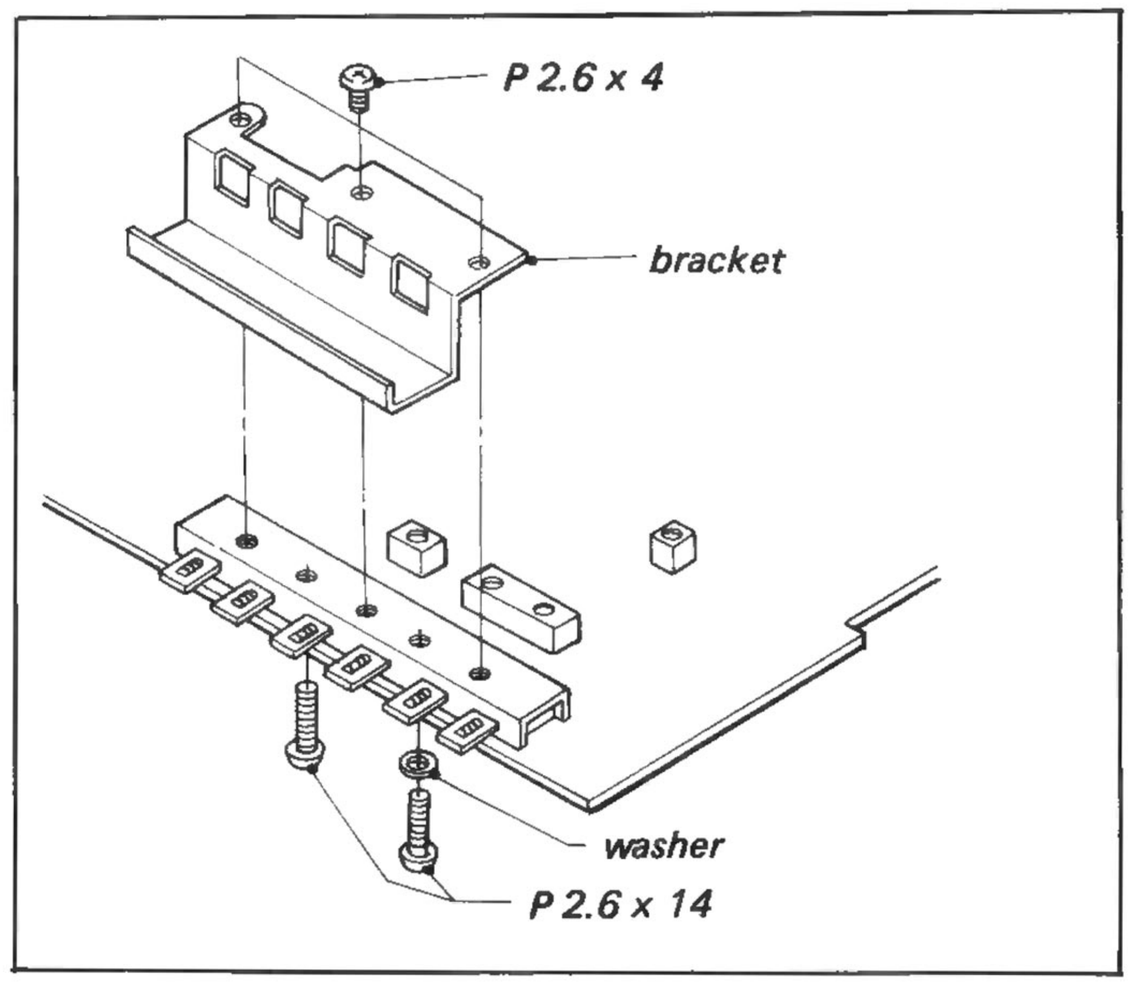

Fig. 2-10. 6-key pushbutton switch replacement

www.hifiengine.com

SECTION 3

ALIGNMENT AND ADJUSTMENT

CAUTION

The fm i-f and discriminator ceramic filters and inductors are selected according to their specified center frequencies and color coded as shown in Fig. 3-1 and in table 3-1, 3-2. Check the color code of the filters and inductor to identify the same center frequency when replacing any of these filters or inductors. Note that seven pairs of ceramic filter and inductor are available.

Note: All signal generator output levels specified in this section are for terminated outputs.

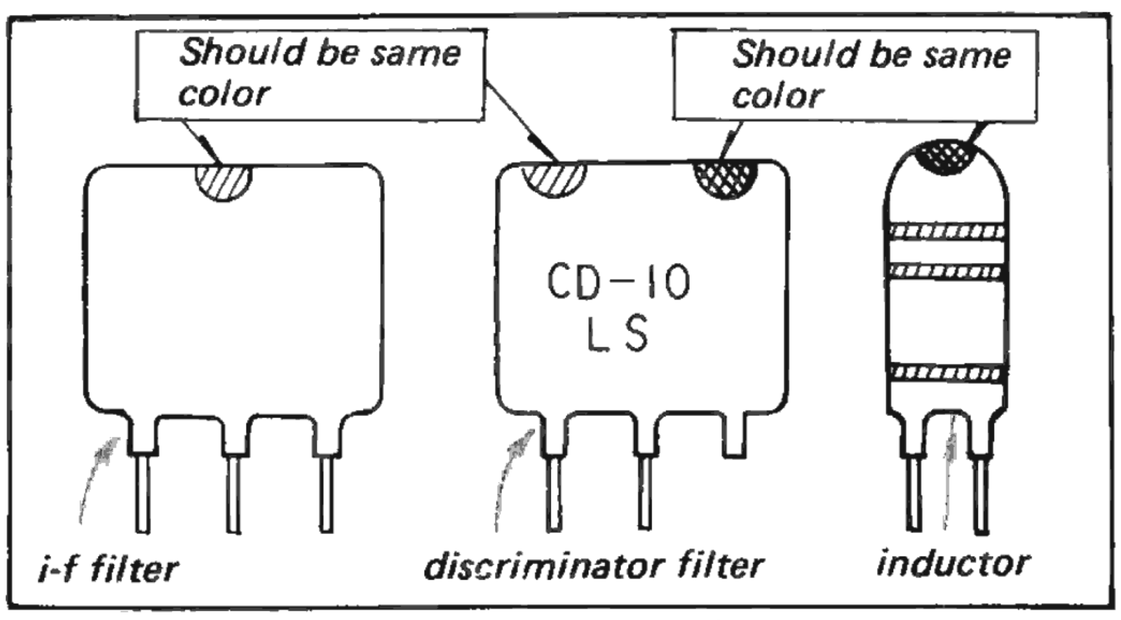

Fig. 3-1. Filters and inductors

TABLE 3-1. INDUCTORS

Color	Inductance (μH) ±5 %
yellow	2.7
red	2.9
orange	3.1
no mark	3.3
blue	3.5
violet	3.7
black	3.9

TABLE 3-2. CERAMIC FILTERS

Color	Specified Center Freq. (MHz)	I-f Ceramic Filter Part No. (CF201, CF202)	Discriminator Ceramic Filter Part No. (CF203 + L202)
red	10.70	1-527-507-12	1-527-201-11
black	10.66	1-527-507-22	1-527-201-21
white	10.74	1-527-507-32	1-527-201-31
green	10.62	1-527-507-42	1-527-201-41
yellow	10.78	1-527-507-52	1-527-201-51

3-1. FM I-F ALIGNMENT

Note: This should be performed only after replacing the I-F transformer in the front-end.

Test Equipment Required

1. Fm signal generator
2. Ac VTVM
3. Oscilloscope
4. Alignment tools

Procedure

1. With the equipment connected as shown in Fig. 3-2, set the signal-generator controls as follows:

   Carrier Frequency . . . . . 98 MHz
   Modulation . . . . . Fm, 400 Hz, 30 % (22.5 kHz)
   Output level . . . . . as low as possible (less than 30 μV)

2. Set the tuner controls as follows:

   FUNCTION switch . . . . FM
   MONO switch . . . . . STEREO

3. Precisely tune to the signal generator carrier frequency for maximum deflection on the TUNER INPUT meter. Carefully adjust IFT101 for maximum deflection on the TUNER INPUT meter.

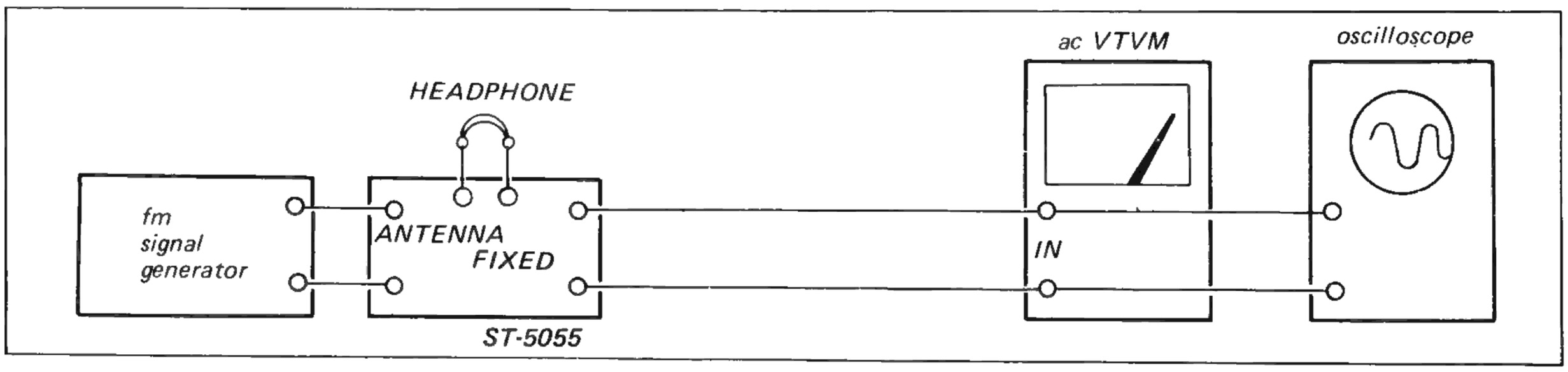

Fig. 3-2. Fm i-f, muting, front-end alignment and meter calibration test setup

www.hifiengine.com

3-2. FM FREQUENCY COVERAGE AND TRACKING ALIGNMENT

Note: Before starting this alignment, ensure that the fm i-f alignment have already been performed.

Signal Generator Method

Test Equipment Required

1. Fm signal generator
2. Ac VTVM
3. Alignment tools

Preparation

1. Connect the equipment as shown in Fig. 3-2.
2. Set the tuner controls as follows.
   FUNCTION switch . . . . FM

Follow the procedures given in Table 3-3 when performing this alignment with an fm signal generator. Be sure that the dial is mechanically calibrated.

Off-the-Air Signal Method

Accurate dial calibration and a frequency-coverage test can also be performed by utilizing off-the-air local fm signals.

3-3. MUTING ADJUSTMENT

Readjustment is necessary after replacing Q206 or if the muting point is not symmetrical when detuning higher or lower than the reference carrier frequency. Two methods of muting adjustment are available, signal generator adjustment and adjustment by using an off-the-air signal. You can use either of them.

Signal Generator Method

Test Equipment Required

1. Fm signal generator
2. Ac VTVM or oscilloscope
3. Alignment tools

Procedure

1. With the equipment connected as shown in Fig. 3-2, set the signal generator and tuner controls as follows:

   Carrier frequency . . . . . 98 MHz
   Modulation . . . . . Fm, 400 Hz, 30 %
   ※ Output level . . . . . 1000 μV (60 dB) terminated
   FUNCTION switch . . . . FM
   MUTING switch . . . . . ON

TABLE 3-3. FM FREQUENCY COVERAGE AND TRACKING ALIGNMENT

Step	SG Frequency	Dial Indication	Ac VTVM Connection	Adjust	Indication
FREQUENCY COVERAGE ALIGNMENT (SG Coupling . . . . Direct; SG Output Level . . .400 Hz, 100 % mod; as low as possible)					
1.	87.5 MHz	lowest position	FIXED	OSC coil L103 See Fig. 3-4.	Maximum VTVM reading
2.	108.4 MHz	highest position		OSC trimmer CT103 See Fig. 3-4.	
TRACKING ALIGNMENT					
1.	87.5 MHz	lowest position	FIXED	Antenna coil L101 RF coil L102 See Fig. 3-4.	Maximum VTVM reading
2.	108.4 MHz	highest position		Antenna trimmer CT101 RF trimmer CT102 See Fig. 3-4.	

www.hifiengine.com

2. Tune to the signal generator frequency, then adjust T201 (See Fig. 3-4) for proper muting operation.

Off-the-Air Signal Method

Accurate muting adjustment can also be performed by utilizing an off-the-air local fm signal instead of the fm signal generator. Note that a weak signal is best for this purpose.

3-4. TUNER INPUT METER CALIBRATION

Test Equipment Required

Same as MUTING ADJUSTMENT

1. With the equipment connected as shown in Fig. 3-2, set the signal generator output as follows:

   Carrier frequency. . . . . 98 MHz
   Modulation . . . . . Fm, 400 Hz, 100 %
   Output level. . . . . 1,000 μV (60 dB)

2. Tune to the signal generator frequency,then adjust RT201 (See Fig. 3-4) for 4.8 reading on the meter as shown in Fig. 3-3.

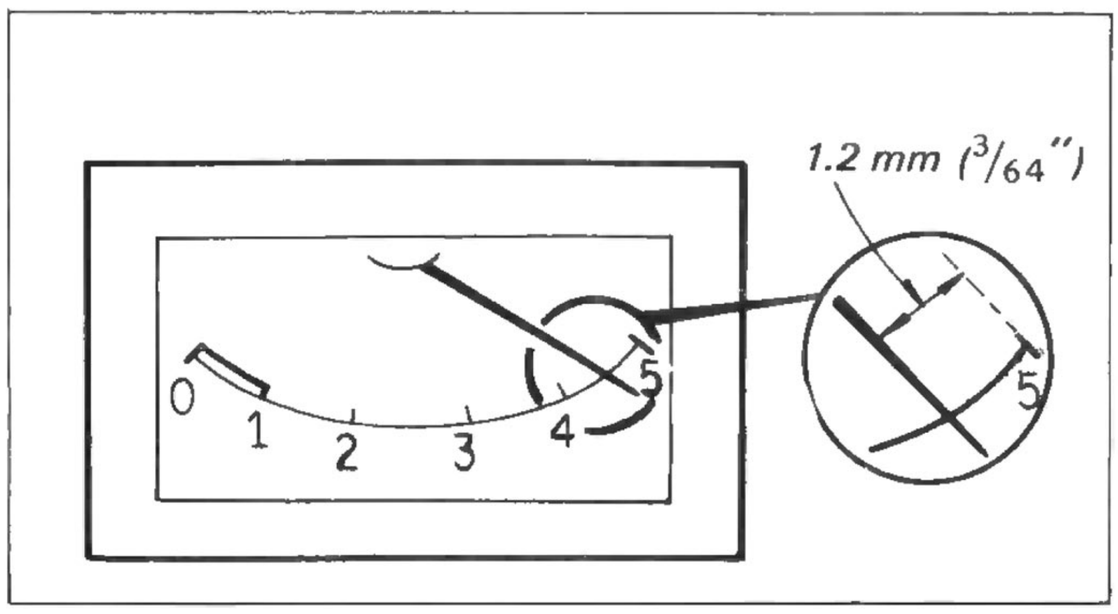

Fig. 3-3. Meter calibration

3-5. FM STEREO SEPARATION ADJUSTMENT

Test Equipment Required

1. Fm stereo signal generator
2. Ac VTVM
3. Oscilloscope
4. MPX generator
5. Audio oscillator
6. Alignment tools

Preparation

Before starting the stereo-separation adjustment, check and adjust the phase between the 19-kHz pilot signal and the sub-channel signal in the MPX stereo generator as follows:

1. With the equipment connected as shown in Fig. 3-5, set the MPX and audio signal-generator controls as follows:

   MAIN CHANNEL . . . . OFF
   SUB CHANNEL . . . . . ON
   PILOT (19 kHz) . . . . . OFF
   AUDIO OSCILLATOR
   OUTPUT . . . . . 400 Hz, 250 mV

2. Adjust the oscilloscope controls to obtain a visible indication. Be sure the scope horizontal display switch is set for external input.

3. Turn the pilot-signal (19 kHz) phase control to obtain an in-phase and stable lissajous pattern as shown in Fig. 3-6.

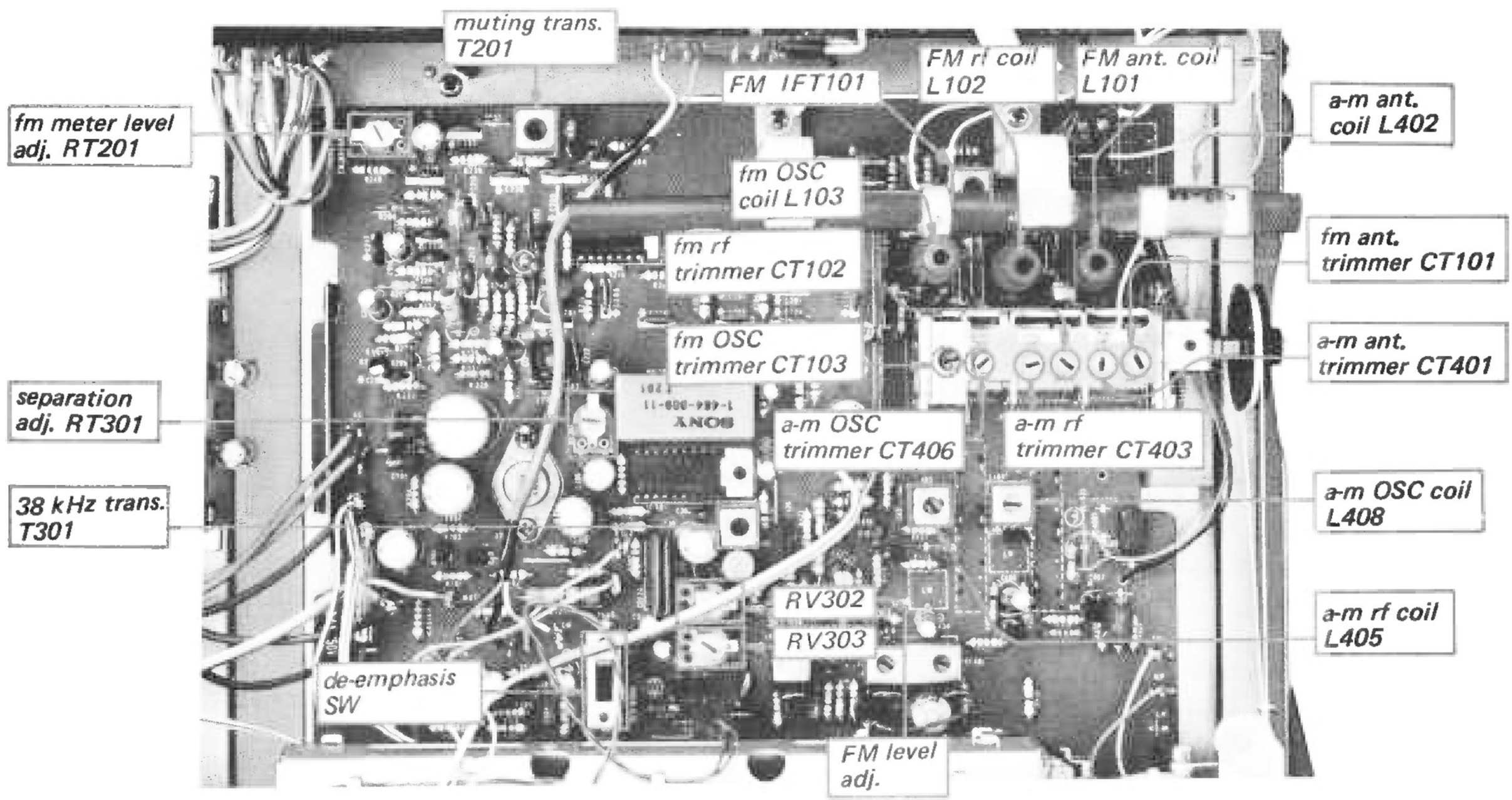

Fig. 3-4. Adjustment parts location

www.hifiengine.com

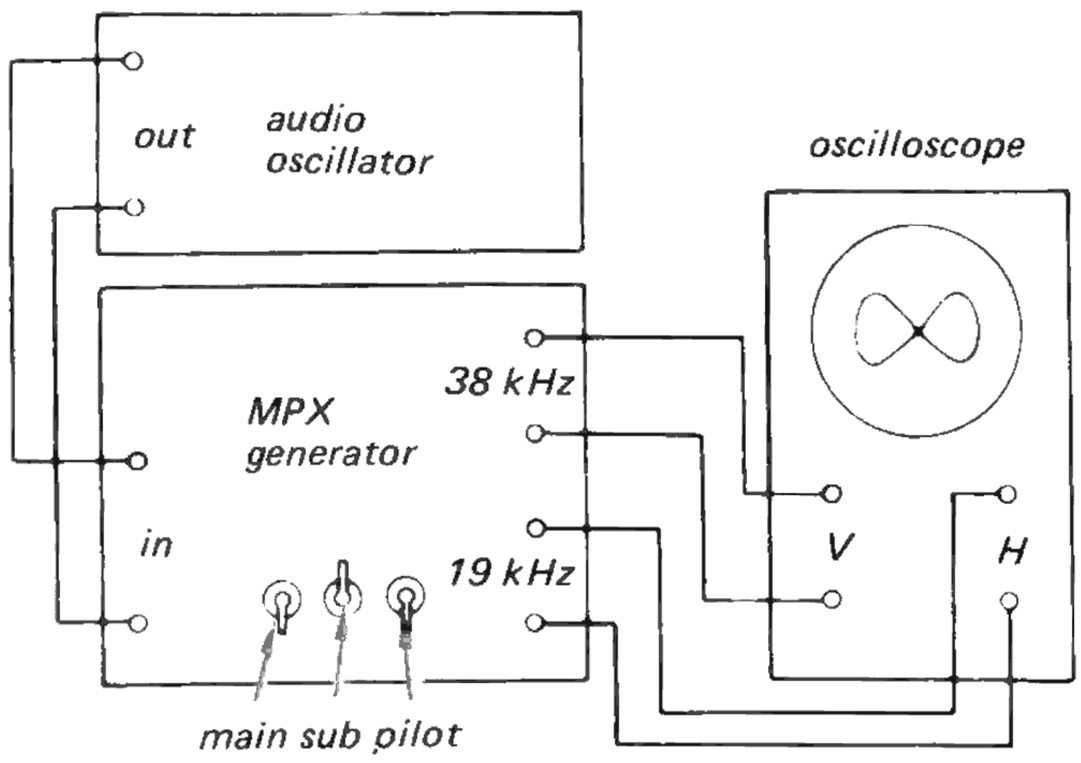

Fig. 3-5. MPX generator preadjustment

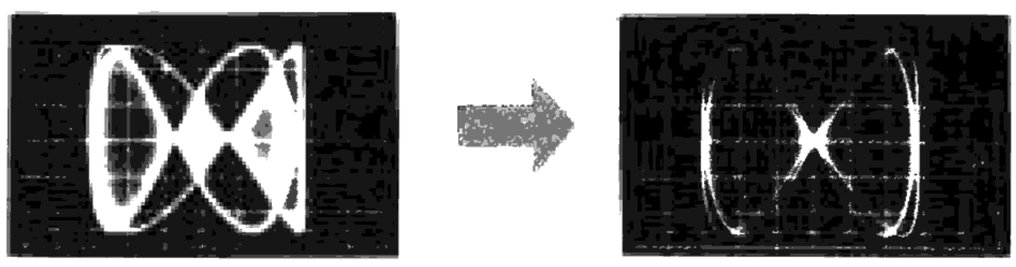

Fig. 3-6. Lissajous pattern

Procedure

1. Connect the equipment as shown in Fig. 3-7. Set the fm signal-generator control as follows:

   Carrier frequency . . . . . 98 MHz
   Output level . . . . . 1,000 μV (60 dB)
   Modulation:
   Main channel (400 Hz) . . 33.75 kHz (45 %)
   Sub channel (38 kHz) . . 33.75 kHz (45 %)
   Pilot (19 kHz). . . . . 7.5 kHz (10 %)

   The previously mentioned modulation levels can be set as follows:

   (a) With the equipment connected as shown in Fig. 3-7, set the MPX stereo generator controls as follows.

   MAIN CHANNEL . . . . OFF
   SUB CHANNEL . . . . . OFF
   PILOT (19 kHz) . . . . . ON

   (b) Adjust the 19 kHz signal level to obtain a 7.5 kHz deviation on the fm signal generator modulation indicator.

   (c) Reset the MPX stereo-generator controls as follows:

   MAIN CHANNEL . . . . ON
   SUB CHANNEL . . . . . OFF
   PILOT (19 kHz) . . . . . OFF
   INPUT SELECTOR . . . L-CH

   (d) Adjust the audio-oscillator output (400 Hz) to obtain a 33.75 kHz deviation on the fm signal generator modulation indicator.

   (e) Set all controls to ON.

2. Precisely tune to the signal generator carrier frequency, then turn the top core of switching transformer T301 (See Fig. 3-4), to obtain maximum output at left channel. Note that this adjustment has a close relationship with stereo distortion.

3. Set the MONO switch to MONO, then adjust RV302 and RV303 (See Fig. 3-4) for same but as large as possible output at both left and right channel.

4. Reset the MONO switch to STEREO.

5. Record the output level of the left channel when the MPX generator input selector is set to the left channel.

6. Switch the MPX generator input selector to the right channel and read the residual signal level in the left channel.

7. The output-level to residual-level ratio represents the separation. Adjust separation adj. control RT301 (See Fig. 3-4) for minimum residual level. Check the right channel for separation. Usually, about an 8 to 9 dB difference in channel separation exists. Readjust RT301 for minimum difference between left-and right-channel separation. While doing this, remember that the output level also changes according to the setting of RT301.

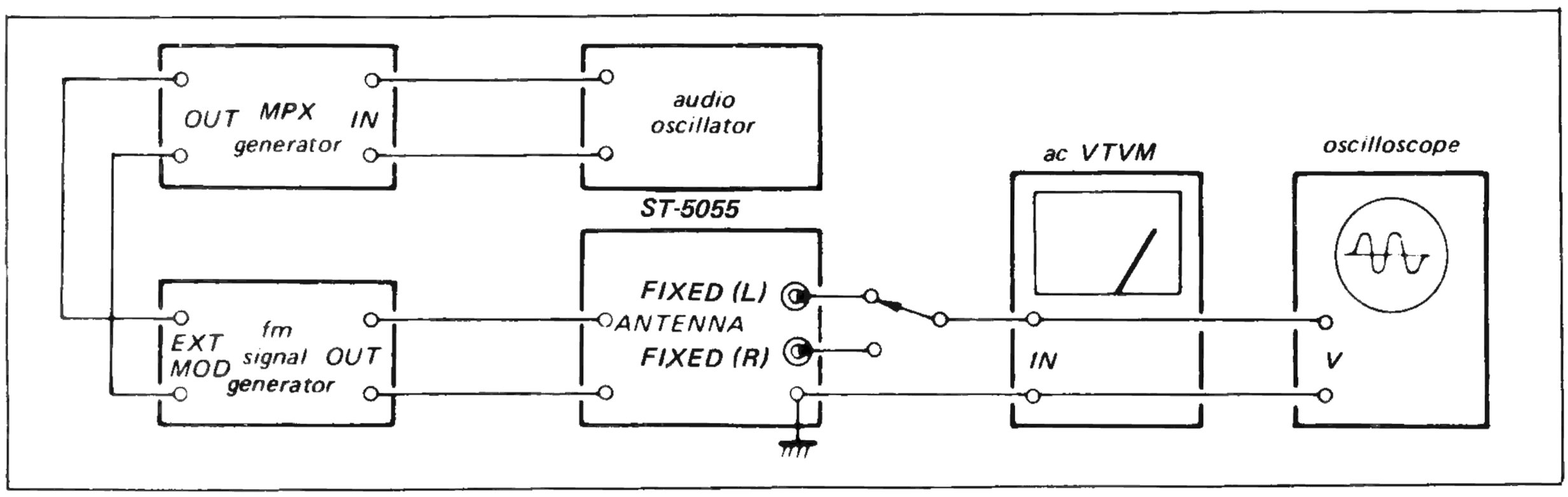

Fig. 3-7. Fm stereo separation adjustment test setup

www.hifiengine.com

3-6. A-M FREQUENCY COVERAGE AND TRACKING ALIGNMENT

Preparation

Set the FUNCTION switch to AM.

Signal Generator Method

Test Equipment Required

1. A-m signal generator
2. Loop antenna
3. Ac VTVM

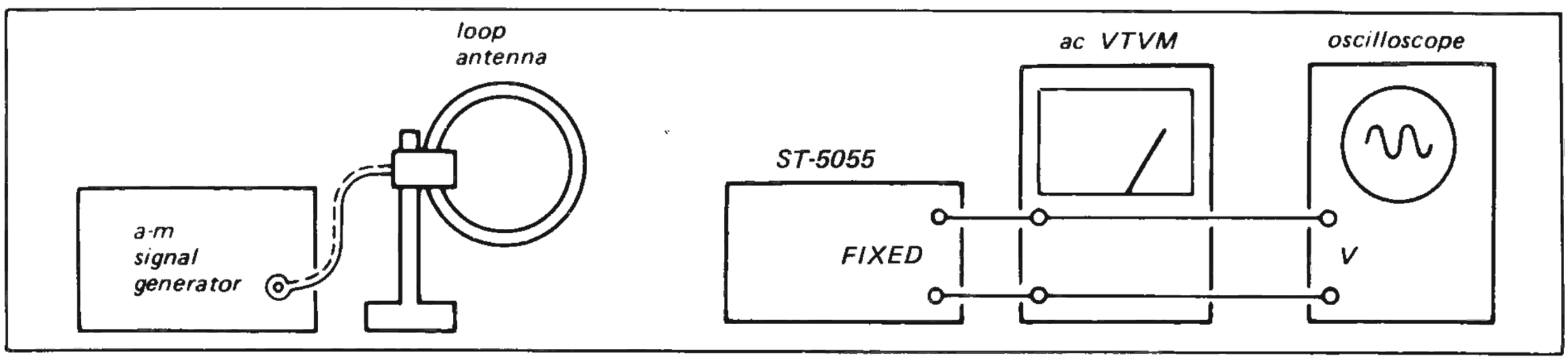

Fig. 3-8. A-M frequency coverage and tracking alignment test setup

Procedure

With the equipment connected as shown in Fig. 3-8, follow the procedures given in Table 3-4.

Off-the-Air Signal Method

Accurate dial calibration, and a frequency-coverage and tracking test can also be performed by utilizing off-the-air local a-m signals. However, before performing this alignment, be sure that the dial is mechanically calibrated.

TABLE 3-4. A-M FREQUENCY COVERAGE AND TRACKING ALIGNMENT

FREQUENCY COVERAGE ALIGNMENT (SG Coupling . . . . Loop antenna SG Output Level . . 400 Hz, 30 % Mod, as low as possible)					
Step	**SG Frequency**	**Dial Indication**	**Ac VTVM Connection**	**Adjust**	**Indication**
1.	550 kHz	550 kHz	FIXED	OSC coil L408 See Fig. 3-4.	Maximum VTVM reading
2.	1,600 kHz	1,600 kHz		OSC trimmer CT406 See Fig. 3-4	
TRACKING ALIGNMENT					
1.	600 kHz	tune to the SG signal	FIXED	Position of antenna coil L402 RF coil L405 See Fig. 3-4.	Maximum VTVM reading
2.	1,400 kHz			Antenna trimmer CT401 RF trimmer CT403 See Fig. 3-4.	

www.hifiengine.com

SECTION 4
REPACKING

The ST-5055 original shipping carton and packing materials are the ideal containers for shipping the unit. However to secure the maximum protection, the ST-5055 must be repacked in these materials precisely as before. The proper repacking procedures are shown in Fig. 4-1.

Note: USA Model . . . . . Serial No. 800,001 and later
Canada Model. . . . Serial No. 700,001 and later

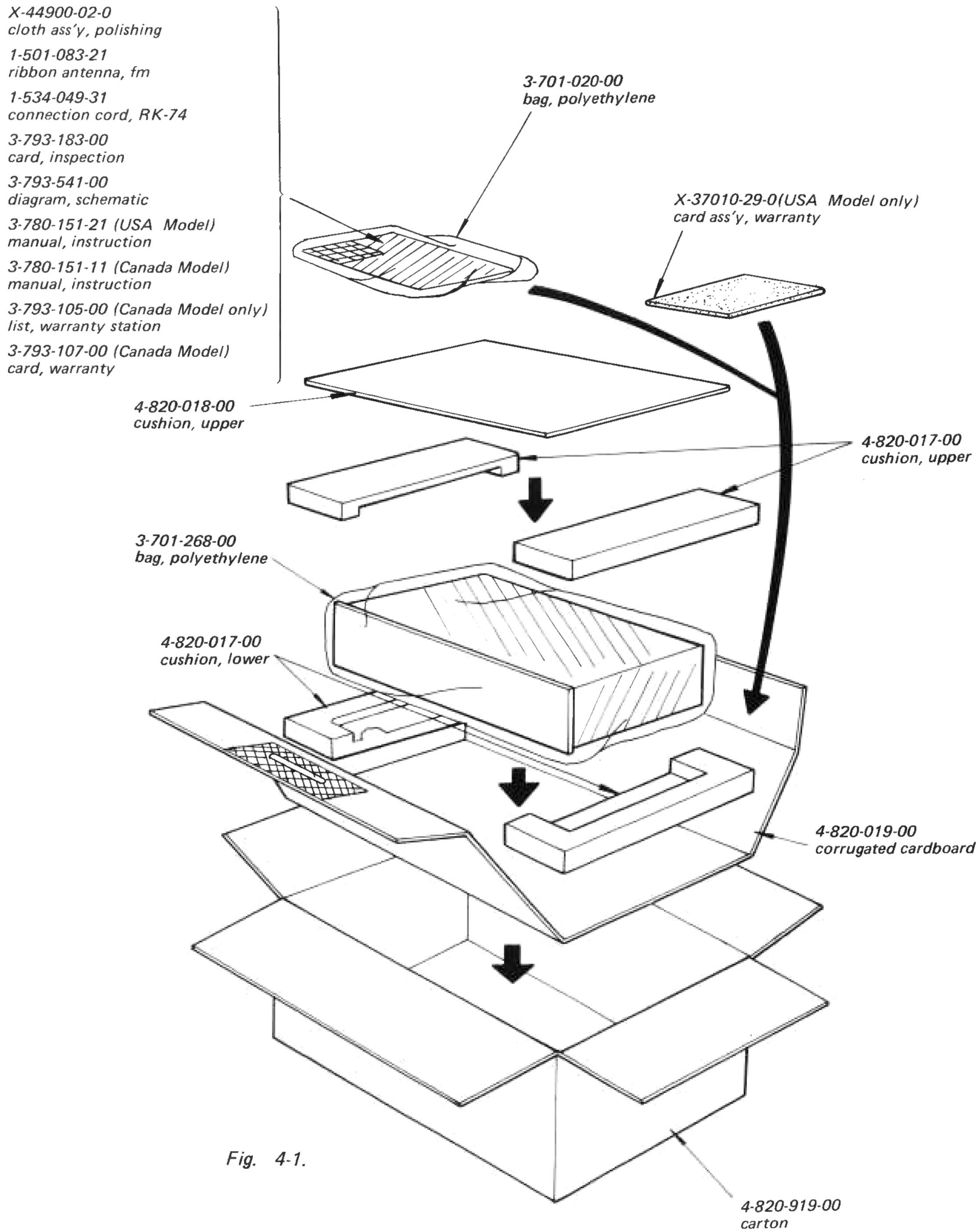

Fig. 4-1.

SECTION 5
DIAGRAMS

5-1. MOUNTING DIAGRAM
– Conductor Side –

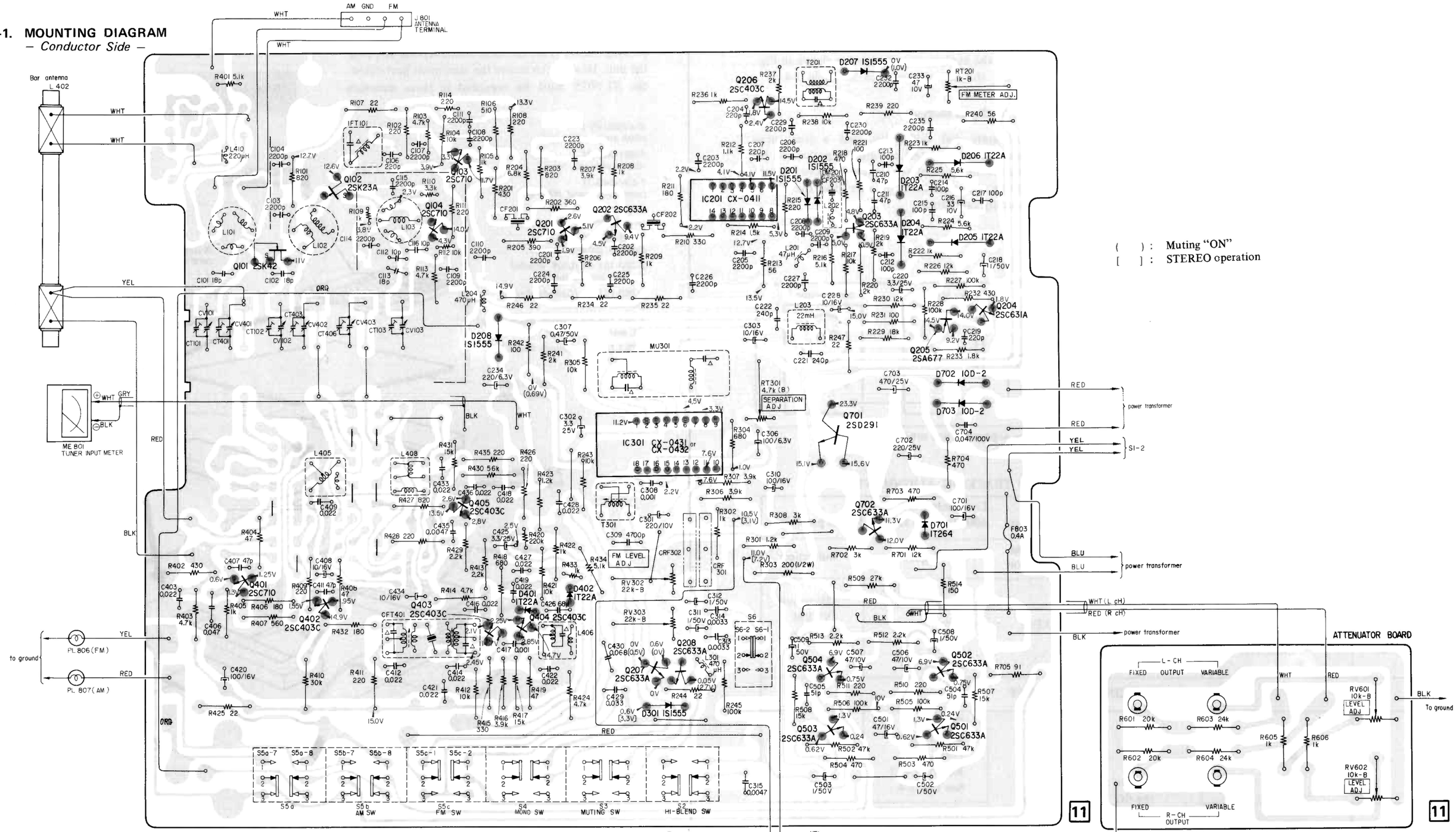

( ) : Muting "ON"
[ ] : STEREO operation

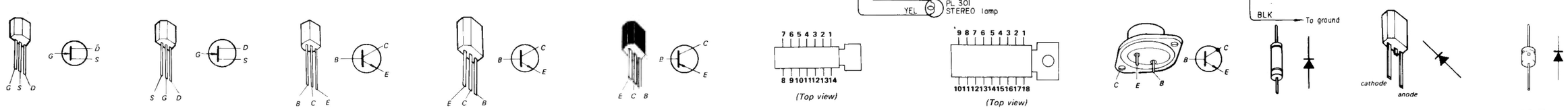

2SK42 | 2SK23A | 2SC710 | 2SC631A 2SC403C 2SC633A 2SC403 | 2SA677 | CX-0411 | CX-0431 CX-0432 | 2SD291 | 1S1555 1T22A | 1T264 | 10D-2

5-2. SCHEMATIC DIAGRAM

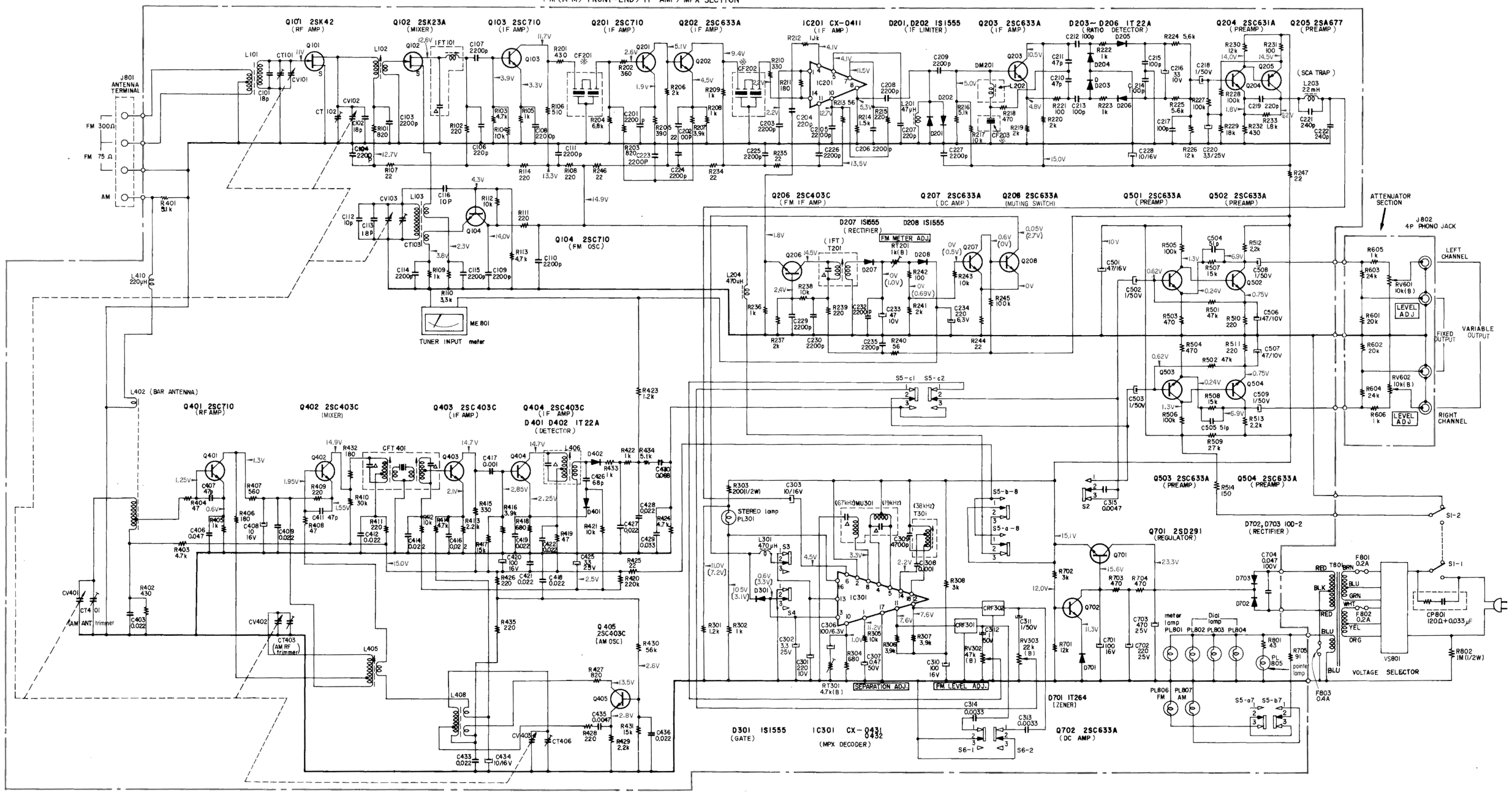

Ref. No	*Description*	*Position*
S1	POWER SW	OFF
S2	HI-BLEND SW	OFF
S3	MUTING SW	ON
S4	MONO SW (STEREO-MONO)	STEREO
S5	FUNCTION SW (FM-AM)	FM
S6	DE-EMPHASIS SW (75 μs – 50 μs)	75 μs

Note:

All resistance values are in ohms. k = 1,000 M = 1,000 k.
All capacitance values are in μF except as indicated with p, which means μμF.
All voltages are dc measured with a VOM having 20 k ohms/volt input impedance. No signal in.
Voltage variations may be noted due to normal production tolerances.
Capacitors marked △ are built in each transformer.

( ) : Muting "ON"
[ ] : STEREO operation
※ : See Table 3-2 on page 9.

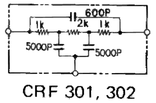

CRF 301, 302

SECTION 6

EXPLODED VIEWS

(1) **Note:** USA Model . . . . . Serial No. 800,001 and later
Canada Model. . . . Serial No. 700,001 and later

Note: All screws are Phillips type (cross recess type) unless otherwise indicated.

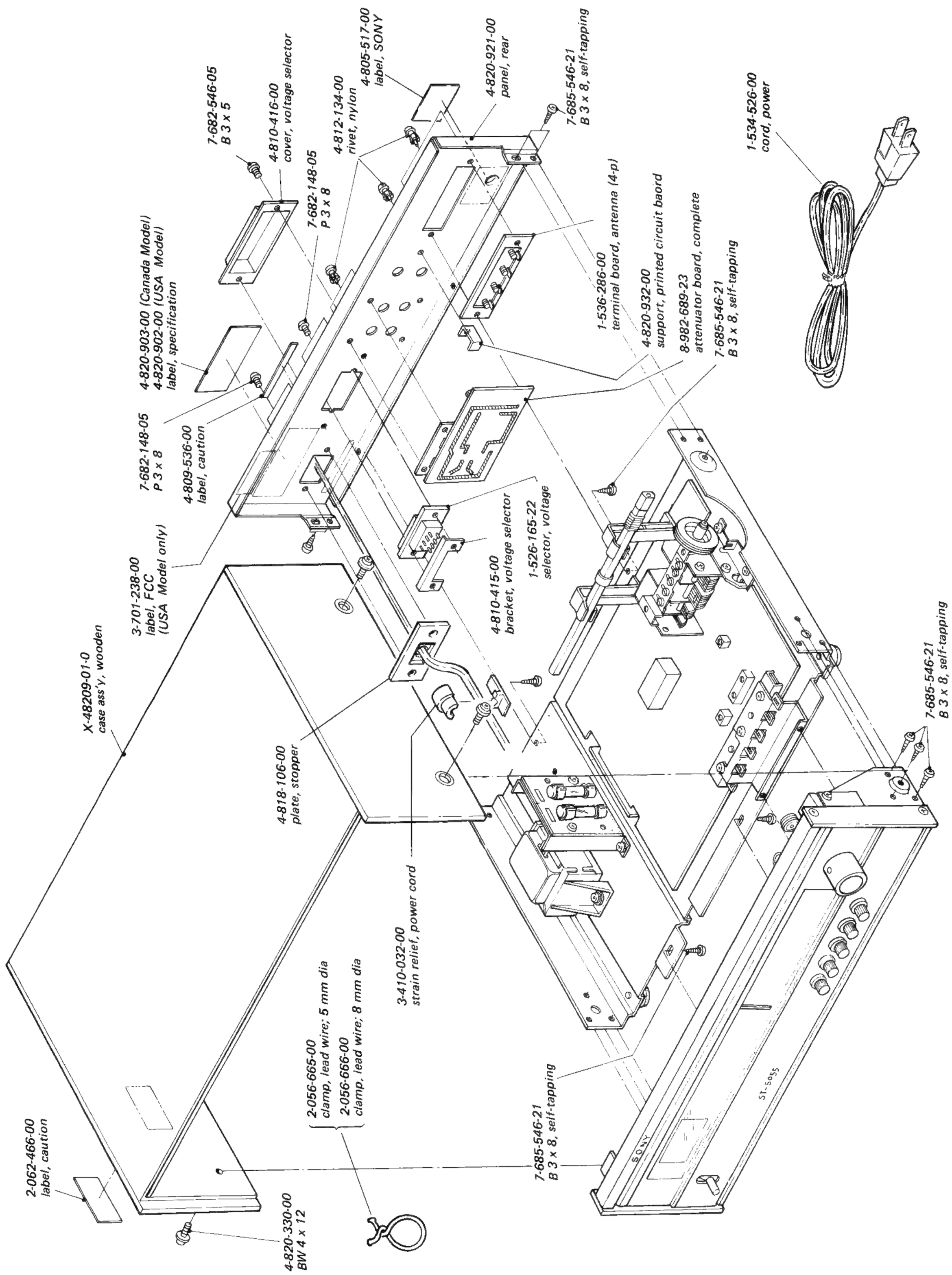

(2)

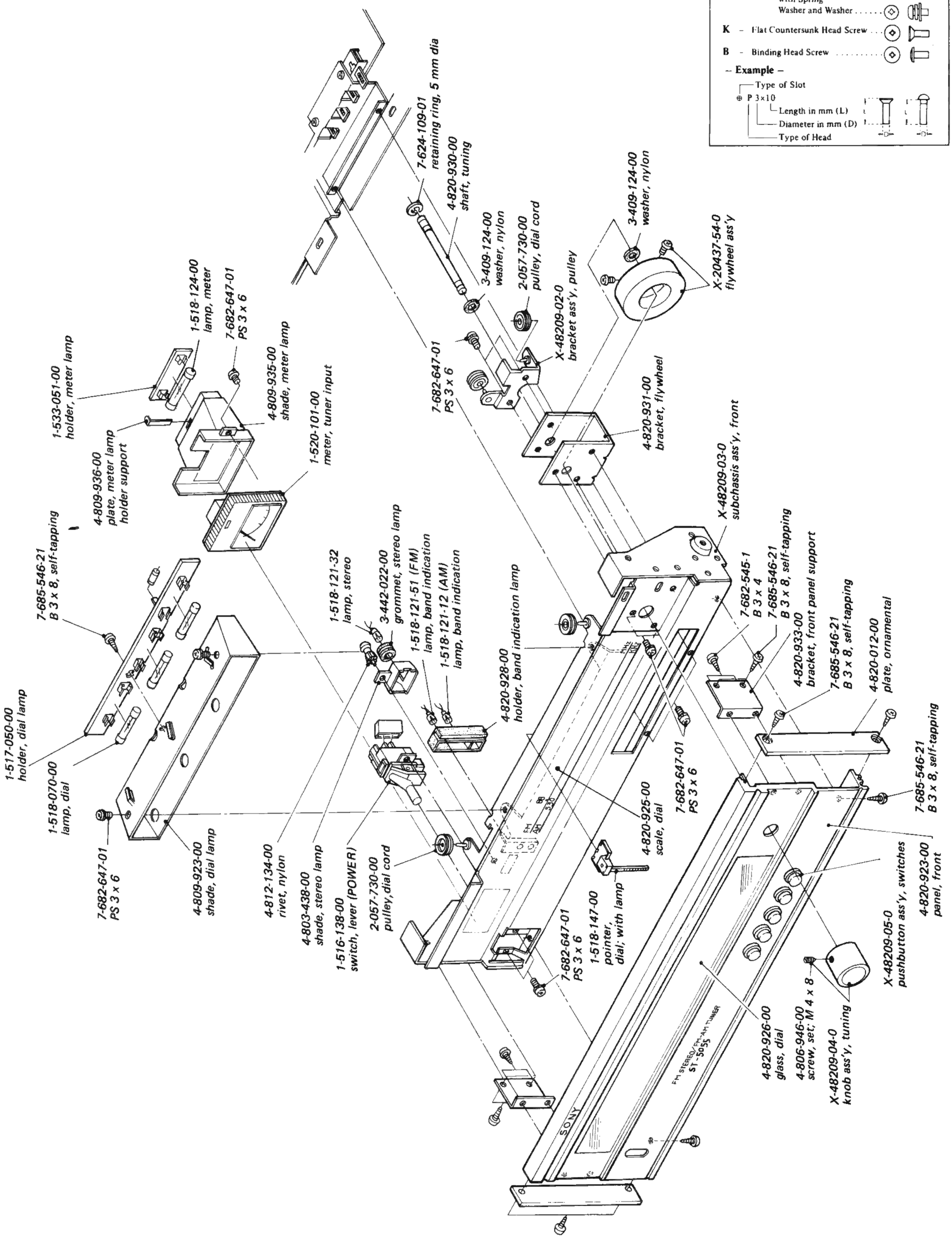

www.hifiengine.com

(3)

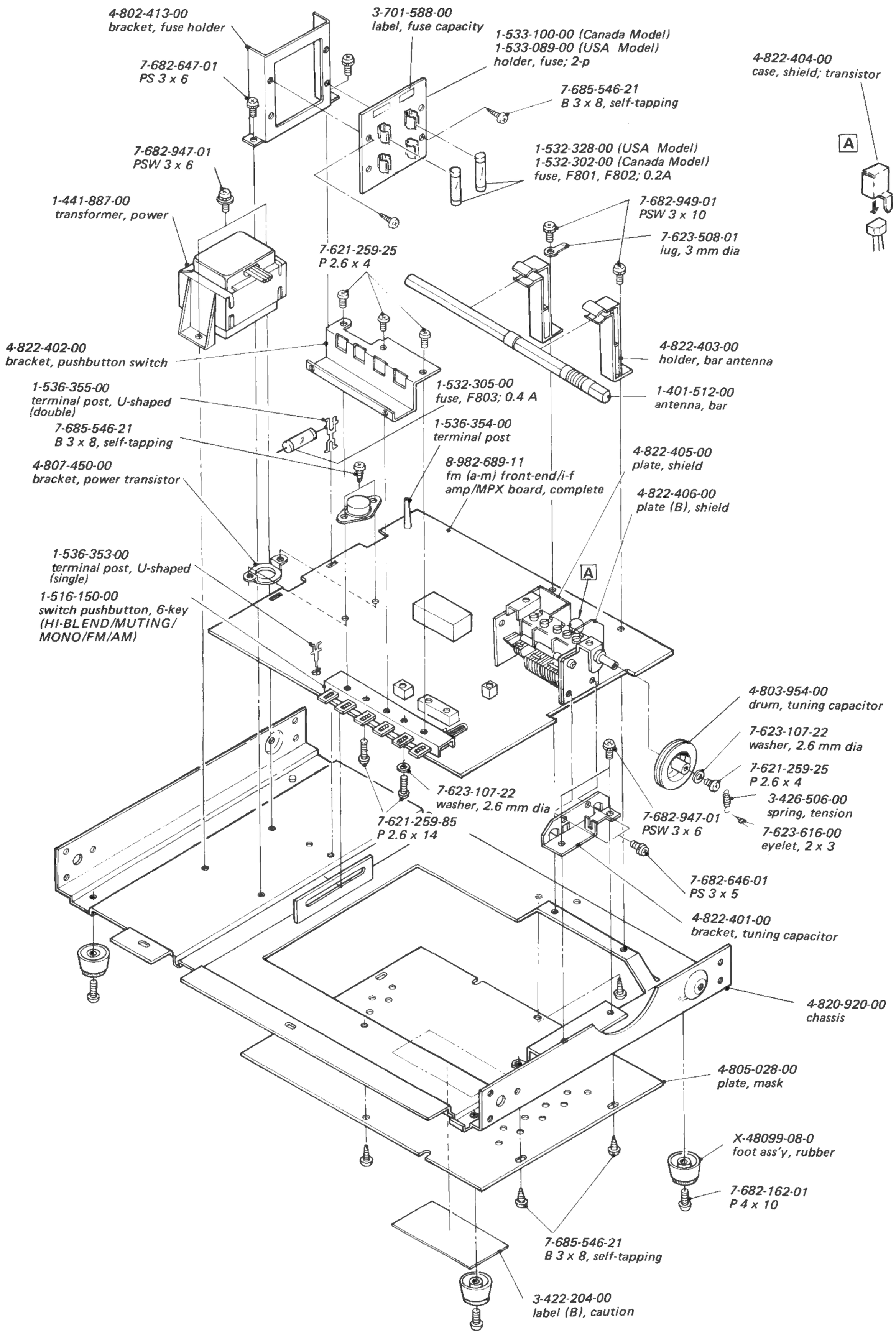

www.hifiengine.com

Note: USA Model . . . . . Serial No. 800,001 and later
Canada Model. . . . Serial No. 700,001 and later

SECTION 7
ELECTRICAL PARTS LIST

Ref. No.	Part No.	Description
		MOUNTED CIRCUIT BOARDS
	8-982-689-11	fm (a-m) front-end/I-f amp/MPX board, complete (TCB016W2B)
	8-982-689-23	attenuator board, complete
		SEMICONDUCTORS
D201		diode 1S1555
D202		diode 1S1555
D203		diode 1T22A
D204		diode 1T22A
D205		diode 1T22A
D206		diode 1T22A
D207		diode 1S1555
D208		diode 1S1555
D301		diode 1S1555
D401		diode 1T22A
D402		diode 1T22A
D701		diode 1T264
D702		diode 10D-2
D703		diode 10D-2
Q101		FET 2SK42
Q102		FET 2SK23A
Q103		transistor 2SC710
Q104		transistor 2SC710
Q201		transistor 2SC710
Q202		transistor 2SC633A
Q203		transistor 2SC633A
Q204		transistor 2SC631A
Q205		transistor 2SA677
Q206		transistor 2SC403C
Q207		transistor 2SC633A
Q208		transistor 2SC633A
Q401		transistor 2SC710
Q402		transistor 2SC403C
Q403		transistor 2SC403C
Q404		transistor 2SC403C
Q405		transistor 2SC403C
Q501		transistor 2SC633A
Q502		transistor 2SC633A
Q503		transistor 2SC633A
Q504		transistor 2SC633A
Q701		transistor 2SD291
Q702		transistor 2SC633A

Ref. No.	Part No.	Description
IC201		IC CX-0411
IC301		IC CX 0431 or 0432
		TRANSFORMERS, COILS & INDUCTORS
CFT401	1-403-150-00	CFT, 455 kHz; triple tuned
IFT101	1-403-821 00	IFT, 10.7 MHz
L101	1-401-514-00	coil, fm antenna
L102	1-425-746-00	coil, fm rf
L103	1-405-554-00	coil, fm osc
L201	1-407-165-00	inductor, micro 47 μH
L203	1-407-418-00	coil, SCA 22 mH
L204	1-407-177-00	inductor, micro 470 μH
L301	1-407-177-00	inductor, micro 470 μH
L402	1-401-512-00	bar antenna
L405	1-425-752-00	coil, AM rf
L406	1-403-149-00	IFT, 455 kHz
L408	1-405-552-00	coil, AM osc
L410	1-407-173-00	inductor, micro 220 μH
MU301	1-464-009-00	MPX unit
T201	1-403-295-00	transformer, muting
T301	1-425-729 00	transformer, switching 38 kHz
T801	1-441-887-00	transformer, power
L202		→ See TABLE 3-1 on page 9.
		CAPACITORS

All capacitance values are in μF except as indicated with p, which means μμF.

C101	1-101-972-11	18 p	±5 %	50 V	ceramic
C102	1-101-972-11	18 p	±5 %	50 V	ceramic
C103	1-102-257 11	2200 p	$^{+80}_{-20}$ %	50 V	ceramic
C104	1-102-257-11	2200 p	$^{+80}_{-20}$ %	50 V	ceramic
C105		----------			
C106	1-102-256-11	220 p	±10 %	50 V	ceramic
C107	1-102-257-11	2200 p	$^{+80}_{-20}$ %	50 V	ceramic
C108	1-102-257-11	2200 p	$^{+80}_{-20}$ %	50 V	ceramic
C109	1-102-257-11	2200 p	$^{+80}_{-20}$ %	50 V	ceramic
C110	1-102-257-11	2200 p	$^{+80}_{-20}$ %	50 V	ceramic
C111	1-102-257-11	2200 p	$^{+80}_{-20}$ %	50 V	ceramic
C112	1-102 858-11	10 p	±0.5 pF	50 V	ceramic
C113	1-101-972-11	18 p	±5 %	50 V	ceramic
C114	1-102-257-11	2200 p	$^{+80}_{-20}$ %	50 V	ceramic
C115	1-102-257-11	2200 p	$^{+80}_{-20}$ %	50 V	ceramic
C116	1-101-978-11	10 p	±0.5 pF	50 V	ceramic
C201	1-102-257-11	2200 p	$^{+80}_{-20}$ %	50 V	ceramic

www.hifiengine.com

Ref. No.	Part No.	Description			
C202	1-102-257-11	2200 p	$^{+80}_{-20}$ %	50 V	ceramic
C203	1-102-257-11	2200 p	$^{+80}_{-20}$ %	50 V	ceramic
C204	1-102-256-11	220 p	±10 %	50 V	ceramic
C205	1-102-257-11	2200 p	$^{+80}_{-20}$ %	50 V	ceramic
C206	1-102-257-11	2200 p	$^{+80}_{-20}$ %	50 V	ceramic
C207	1-102-256-11	220 p	±10 %	50 V	ceramic
C208	1-102-257-11	2200 p	$^{+80}_{-20}$ %	50 V	ceramic
C209	1-102-257-11	2200 p	$^{+80}_{-20}$ %	50 V	ceramic
C210	1-101-880-11	47 p	±5 %	50 V	ceramic
C211	1-101-880-11	47 p	±5 %	50 V	ceramic
C212	1-102-258-11	100 p	±10 %	50 V	ceramic
C213	1-102-258-11	100 p	±10 %	50 V	ceramic
C214	1-102-258-11	100 p	±10 %	50 V	ceramic
C215	1-102-258-11	100 p	±10 %	50 V	ceramic
C216	1-121-402-11	33		10 V	electrolytic
C217	1-102-258-11	100 p	±10 %	50 V	ceramic
C218	1-121-912-11	1		50 V	electrolytic
C219	1-102-256-11	220 p	±10 %	50 V	ceramic
C220	1-121-392-11	3.3		25 V	electrolytic
C221	1-102-979-11	240 p	±5 %	50 V	ceramic
C222	1-102-979-11	240 p	±5 %	50 V	ceramic
C223	1-102-257-11	2200 p	$^{+80}_{-20}$ %	50 V	ceramic
C224	1-102-257-11	2200 p	$^{+80}_{-20}$ %	50 V	ceramic
C225	1-102-257-11	2200 p	$^{+80}_{-20}$ %	50 V	ceramic
C226	1-102-257-11	2200 p	$^{+80}_{-20}$ %	50 V	ceramic
C227	1-102-257-11	2200 p	$^{+80}_{-20}$ %	50 V	ceramic
C228	1-121-651-11	10		16 V	electrolytic
C229	1-102-257-11	2200 p	$^{+80}_{-20}$ %	50 V	ceramic
C230	1-102-257-11	2200 p	$^{+80}_{-20}$ %	50 V	ceramic
C231		----------			
C232	1-102-257-11	2200 p	$^{+80}_{-20}$ %	50 V	ceramic
C233	1-121-352-11	47		10 V	electrolytic
C234	1-121-419-11	220		6.3 V	electrolytic
C235	1-102-257-11	2200 p	$^{+80}_{-20}$ %	50 V	ceramic
C301	1-121-420-11	220		10 V	electrolytic
C302	1-121-392-11	3.3		25 V	electrolytic
C303	1-121-916-11	10		16 V	electrolytic
C304		----------			
C305		----------			
C306	1-121-413-11	100		6.3 V	electrolytic
C307	1-121-726-11	0.47		50 V	electrolytic
C308	1-105-661-12	0.001	±10 %	50 V	mylar
C309	1-103-575-11	4700 p	±5 %	50 V	styrol
C310	1-121-415-11	100		16 V	electrolytic
C311	1-121-912-11	1		50 V	electrolytic
C312	1-121-912-11	1		50 V	electrolytic
C313	1-105-667-12	0.0033	±10 %	50 V	mylar
C314	1-105-667-12	0.0033	±10 %	50 V	mylar
C315	1-105-669-12	0.0047	±10 %	50 V	mylar
C403	1-105-677-12	0.022	±10 %	50 V	mylar

Ref. No.	Part No.	Description			
C404	1-105-664-12	0.0018	±10 %	50 V	mylar
C405	1-105-663-12	0.0015	±10 %	50 V	mylar
C406	1-105-681-12	0.047	±10 %	50 V	mylar
C407	1-101-880-11	47 p	±5 %	50 V	ceramic
C408	1-121-651-11	10		16 V	electrolytic
C409	1-105-677-12	0.022	±10 %	50 V	mylar
C410		----------			
C411	1-101-880-11	47 p	±5 %	50 V	ceramic
C412	1-105-677-12	0.022	±10 %	50 V	mylar
C413		----------			
C414	1-105-677-12	0.022	±10 %	50 V	mylar
C415		----------			
C416	1-105-677-12	0.022	±10 %	50 V	mylar
C417	1-105-661-12	0.001	±10 %	50 V	mylar
C418	1-105-677-12	0.022	±10 %	50 V	mylar
C419	1-105-677-12	0.022	±10 %	50 V	mylar
C420	1-121-415-11	100		16 V	electrolytic
C421	1-105-677-12	0.022	±10 %	50 V	mylar
C422	1-105-677-12	0.022	±10 %	50 V	mylar
C423		----------			
C424		----------			
C425	1-121-392-11	3.3		25 V	electrolytic
C426	1-101-888-11	68 p	±5 %	50 V	ceramic
C427	1-105-677-12	0.022	±10 %	50 V	mylar
C428	1-105-677-12	0.022	±10 %	50 V	mylar
C429	1-105-679-12	0.033	±10 %	50 V	mylar
C430	1-105-683-12	0.068	±10 %	50 V	mylar
C433	1-105-677-12	0.022	±10 %	50 V	mylar
C434	1-121-651-11	10		16 V	electrolytic
C435	1-105-669-12	0.0047	±10 %	50 V	mylar
C436	1-105-677-12	0.022	±10 %	50 V	mylar
C501	1-121-409-11	47		16 V	electrolytic
C502	1-121-912-11	1		50 V	electrolytic
C503	1-121-912-11	1		50 V	electrolytic
C504	1-101-882-11	51 p	±5 %	50 V	ceramic
C505	1-101-882-11	51 p	±5 %	50 V	ceramic
C506	1-121-352-11	47		10 V	electrolytic
C507	1-121-352-11	47		10 V	electrolytic
C508	1-121-391-11	1		50 V	electrolytic
C509	1-121-391-11	1		50 V	electrolytic
C701	1-121-415-11	100		16 V	electrolytic
C702	1-121-422-11	220		25 V	electrolytic
C703	1-121-733-11	470		25 V	electrolytic
C704	1-105-881-12	0.047	±20 %	100 V	mylar
CT101, 102, 103 CT401, 403, 406	1-151-254-11	capacitor, tuning			

www.hifiengine.com

Ref. No.	Part No.	Description
CV101, 102, 103 CV401, 402, 403	1-151-254-11	capacitor, tuning

RESISTORS

All resistance values are in Ω, ± 5 %, ¼ W and carbon type unless otherwise indicated.

Ref. No.	Part No.	Description		
R101	1-244-671-11	820		
R102	1-244-657-11	220		
R103	1-242-689-11	4.7 k		
R104	1-244-697-11	10 k		
R105	1-244-673-11	1 k		
R106	1-244-666-11	510		
R107	1-244-633-11	22		
R108	1-244-657-11	220		
R109	1-242-673-11	1 k		
R110	1-242-685-11	3.3 k		
R111	1-244-657-11	220		
R112	1-242-697-11	10 k		
R113	1-244-689-11	4.7 k		
R114	1-242-657-11	220		
R201	1-244-664-11	430		
R202	1-244-662-11	360		
R203	1-244-671-11	820		
R204	1-244-693-11	6.8 k		
R205	1-244-663-11	390		
R206	1-244-680-11	2 k		
R207	1-244-687-11	3.9 k		
R208	1-244-673-11	1 k		
R209	1-244-673-11	1 k		
R210	1-244-661-11	330		
R211	1-244-655-11	180		
R212	1-244-674-11	1.1 k		
R213	1-244-643-11	56		
R214	1-244-677-11	1.5 k		
R215	1-244-657-11	220		
R216	1-244-690-11	5.1 k		
R217	1-244-697-11	10 k		
R218	1-244-665-11	470		
R219	1-244-680-11	2 k		
R220	1-244-680-11	2 k		
R221	1-244-649-11	100		
R222	1-244-673-11	1 k		
R223	1-244-673-11	1 k		
R224	1-244-691-11	5.6 k		
R225	1-244-691-11	5.6 k		
R226	1-244-699-11	12 k		
R227	1-244-721-11	100 k		
R228	1-244-721-11	100 k		
R229	1-244-703-11	18 k		
R230	1-244-699-11	12 k		
R231	1-244-649-11	100		
R232	1-244-664-11	430		
R233	1-244-679-11	1.8 k		
R234	1-244-633-11	22		
R235	1-244-633-11	22		
R236	1-244-673-11	1 k		
R237	1-244-680-11	2 k		
R238	1-244-697-11	10 k		
R239	1-244-657-11	220		
R240	1-244-643-11	56		
R241	1-244-680-11	2 k		
R242	1-244-649-11	100		
R243	1-244-697-11	10 k		
R244	1-244-633-11	22		
R245	1-244-721-11	100 k		
R246	1-244-633-11	22		
R247	1-244-633-11	22		
R301	1-244-675-11	1.2 k		
R302	1-244-673-11	1 k		
R303	1-202-556-11	200	½ W	composition
R304	1-244-669-11	680		
R305	1-244-697-11	10 k		
R306	1-244-687-11	3.9 k		
R307	1-244-687-11	3.9 k		
R308	1-244-684-11	3 k		
R401	1-242-690-11	5.1 k		
R402	1-244-664-11	430		
R403	1-244-689-11	4.7 k		
R404	1-244-641-11	47		
R405	1-244-673-11	1 k		
R406	1-244-655-11	180		
R407	1-244-667-11	560		
R408	1-244-641-11	47		
R409	1-244-657-11	220		
R410	1-244-708-11	30 k		
R411	1-244-657-11	220		
R412	1-244-697-11	10 k		
R413	1-244-681-11	2.2 k		
R414	1-244-689-11	4.7 k		
R415	1-244-661-11	330		
R416	1-244-687-11	3.9 k		
R417	1-244-701-11	15 k		
R418	1-244-669-11	680		
R419	1-244-641-11	47		
R420	1-242-729-11	220 k		
R421	1-244-697-11	10 k		
R422	1-244-673-11	1 k		
R423	1-244-675-11	1.2 k		
R424	1-244-689-11	4.7 k		

www.hifiengine.com

Ref. No.	Part No.	Description
R425	1-244-633-11	22
R426	1-244-657-11	220
R427	1-244-671-11	820
R428	1-244-657-11	220
R429	1-244-681-11	2.2 k
R430	1-244-715-11	56 k
R431	1-244-701-11	15 k
R432	1-244-655-11	180
R433	1-242-673-11	1 k
R434	1-244-690-11	5.1 k
R435	1-244-657-11	220
R501	1-244-713-11	47 k
R502	1-244-713-11	47 k
R503	1-244-665-11	470
R504	1-244-665-11	470
R505	1-244-721-11	100 k
R506	1-244-721-11	100 k
R507	1-244-701-11	15 k
R508	1-244-701-11	15 k
R509	1-244-707-11	27 k
R510	1-244-657-11	220
R511	1-244-657-11	220
R512	1-244-681-11	2.2 k
R513	1-244-681-11	2.2 k
R514	1-244-653-11	150
R601	1-244-704-11	20 k
R602	1-244-704-11	20 k
R603	1-244-706-11	24 k
R604	1-244-706-11	24 k
R605	1-244-673-11	1 k
R606	1-244-673-11	1 k
R701	1-244-699-11	12 k
R702	1-244-684-11	3 k
R703	1-244-665-11	470
R704	1-244-665-11	470
R705	1-244-648-11	91
R801	1-244-640-11	43
R802	1-202-645-11	1M ½ W composition
RT201	1-222-761-11	1 k (B), adjustable (fm meter adj)
RT301	1-222-763-11	4.7 k (B), adjustable (separation adj)
RV302	1-222-764-11	22 k (B), adjustable (fm level adj)
RV303	1-222-764-11	22 k (B), adjustable (fm level adj)
RV601	1-222-693-11	10 k (B), variable (LEVEL adj)
RV602	1-222-693-11	10 k (B), variable (LEVEL adj)

SWITCHES

Ref. No.	Part No.	Description
S1	1-516-138-00	switch, lever (POWER)
S2, S3, S4, S5	1-516-150-00	switch, pushbutton; 6-key (HI-BLEND) (MUTING) (MONO) (FM) (AM)
S6	1-514-448-00	switch, slide (DE-EMPHASIS)

FILTERS

Ref. No.	Part No.	Description
CF201, CF202	1-527-507-12	fm i-f, ceramic 10.70 MHz (red)
	1-527-507-22	fm i-f, ceramic 10.66 MHz (black)
	1-527-507-32	fm i-f, ceramic 10.74 MHz (white)
	1-527-507-42	fm i-f, ceramic 10.62 MHz (green)
	1-527-507-52	fm i-f, ceramic 10.78 MHz (yellow)
CF203 + L202	1-527-201-11	filter, ceramic 10.70 MHz (red)
	1-527-201-21	filter, ceramic 10.66 MHz (black)
	1-527-201-31	filter, ceramic 10.74 MHz (white)
	1-527-201-41	filter, ceramic 10.62 MHz (green)
	1-527-201-51	filter, ceramic 10.78 MHz (yellow)

(See Table 3-2 on page 9.)

MISCELLANEOUS

Ref. No.	Part No.	Description
CP801	1-231-057-12	encapsulated component (120 Ω + 0.033 μF)
CRF301, CRF302	1-231-224-00	encapsulated component (L.P.F)
F801	1-532-328-00	fuse, 0.2 A/250 V (USA Model)
F802	1-532-302-00	fuse, 0.2 A/250 V (Canada Model)
F803	1-532-305-00	fuse, 0.4 A/250 V
J801	1-536-286-00	terminal board, antenna (4-p)
J802	1-536-352-00	jack phono; 4-p
ME801	1-520-101-00	meter, TUNER INPUT
PL301	1-518-121-32	lamp, stereo 4.5 V/40 mA
PL801	1-518-124-00	lamp, meter 8 V/0.25 A
PL802	1-518-070-00	lamp, dial 8 V/0.3 A
PL803	1-518-070-00	lamp, dial 8 V/0.3 A
PL804	1-518-070-00	lamp, dial 8 V/0.3 A
PL805	1-518-147-00	lamp, pointer 5 V/0.06 A
PL806	1-518-121-51	lamp, FM 4.5 V/40 mA
PL807	1-518-121-12	lamp, AM 4.5 V/40 mA
VS801	1-526-165-22	selector, voltage
	1-533-051-00	holder, meter lamp
	1-533-089-00	holder, fuse; 2-p (USA Model)
	1-533-100-00	holder, fuse; 2-p (Canada Model)
	1-534-526-00	cord, power
	1-536-353-00	terminal post, U-shaped (single)
	1-536-354-00	terminal post
	1-536-355-00	terminal post, U-shaped (double)
	1-517-050-00	holder, dial lamp

www.hifiengine.com

SONY CORPORATION

4B0508-2

Printed in Japan

www.hifiengine.com