SONY®

REMOTE CONTROL UNIT

RMU-01

SERVICE MANUAL

1st Edition (Revised 1)

⚠警告

このマニュアルは，サービス専用です。
お客様が，このマニュアルに記載された設置や保守，点検，修理などを行うと感電や火災，人身事故につながることがあります。
危険をさけるため，サービストレーニングを受けた技術者のみご使用ください。

⚠WARNING

This manual is intended for qualified service personnel only.
To reduce the risk of electric shock, fire or injury, do not perform any servicing other than that contained in the operating instructions unless you are qualified to do so. Refer all servicing to qualified service personnel.

⚠WARNUNG

Die Anleitung ist nur für qualifiziertes Fachpersonal bestimmt.
Alle Wartungsarbeiten dürfen nur von qualifiziertem Fachpersonal ausgeführt werden. Um die Gefahr eines elektrischen Schlages, Feuergefahr und Verletzungen zu vermeiden, sind bei Wartungsarbeiten strikt die Angaben in der Anleitung zu befolgen. Andere als die angegeben Wartungsarbeiten dürfen nur von Personen ausgeführt werden, die eine spezielle Befähigung dazu besitzen.

⚠AVERTISSEMENT

Ce manual est destiné uniquement aux personnes compétentes en charge de l’entretien. Afin de réduire les risques de décharge électrique, d’incendie ou de blessure n’effectuer que les réparations indiquées dans le mode d’emploi à moins d’être qualifié pour en effectuer d’autres. Pour toute réparation faire appel à une personne compétente uniquement.

Table of Contents

Manual Structure

Purpose of this manual ..... 3 (E)
Related manuals ..... 3 (E)

1. Service Overview

1-1. Removal ..... 1-1 (E)
1-2. Firmware Update ..... 1-2 (E)
1-2-1. Equipment and Preparation ..... 1-2 (E)
1-2-2. Firmware Update Procedure ..... 1-2 (E)
1-2-3. Checking the Mac Address of the Remote Microcomputer ..... 1-3 (E)
1-2-4. Checking Firmware Version ..... 1-4 (E)
1-3. Test Mode ..... 1-5 (E)
1-4. Checking RF Remote Operation ..... 1-6 (E)
1-5. Recommended Power Cord ..... 1-9 (E)
1-6. Installation and Removal of Coaxial Harness ..... 1-10 (E)
1-7. Lead-free Solder ..... 1-10 (E)

2. Spare Parts

2-1. Notes on Repair Parts 2-1
2-2. Exploded Views 2-2
2-3. Electrical Parts List 2-3
2-4. Supplied Accessories 2-6

3. Block Diagrams

3-1. Overall Block Diagrams ..... 3-1 (E)
3-2. Circuit Description ..... 3-1 (E)

4. Schematic Diagrams

NET-10 4-2
RM-223 4-4

5. Board Layouts

NET-10 5-2
RM-223 5-3

Manual Structure

Purpose of this manual

This manual describes the information items that premise the service based on the components parts assuming use of system and service engineers.

Related manuals

The following manuals are available in this model.
If this manual is required, please contact your local Sony Sales Office/Service Center.

- **RMU-01 Instruction Manual (Supplied with RMU-01)**
  This manual is necessary for application and operation of RMU-01.

- **"Semiconductor Pin Assignments" CD-ROM (Available on request)**
  This "Semiconductor Pin Assignments" CD-ROM allows you to search for semiconductors used in this unit.
  This manual contains a complete list of semiconductors and their ID Nos., and thus should be used together with the CD-ROM.
  Part number: 9-968-546-06

Section 1
Service Overview

1-1. Removal

Note

In this section, remove parts in the order of numbers shown in respective figure.

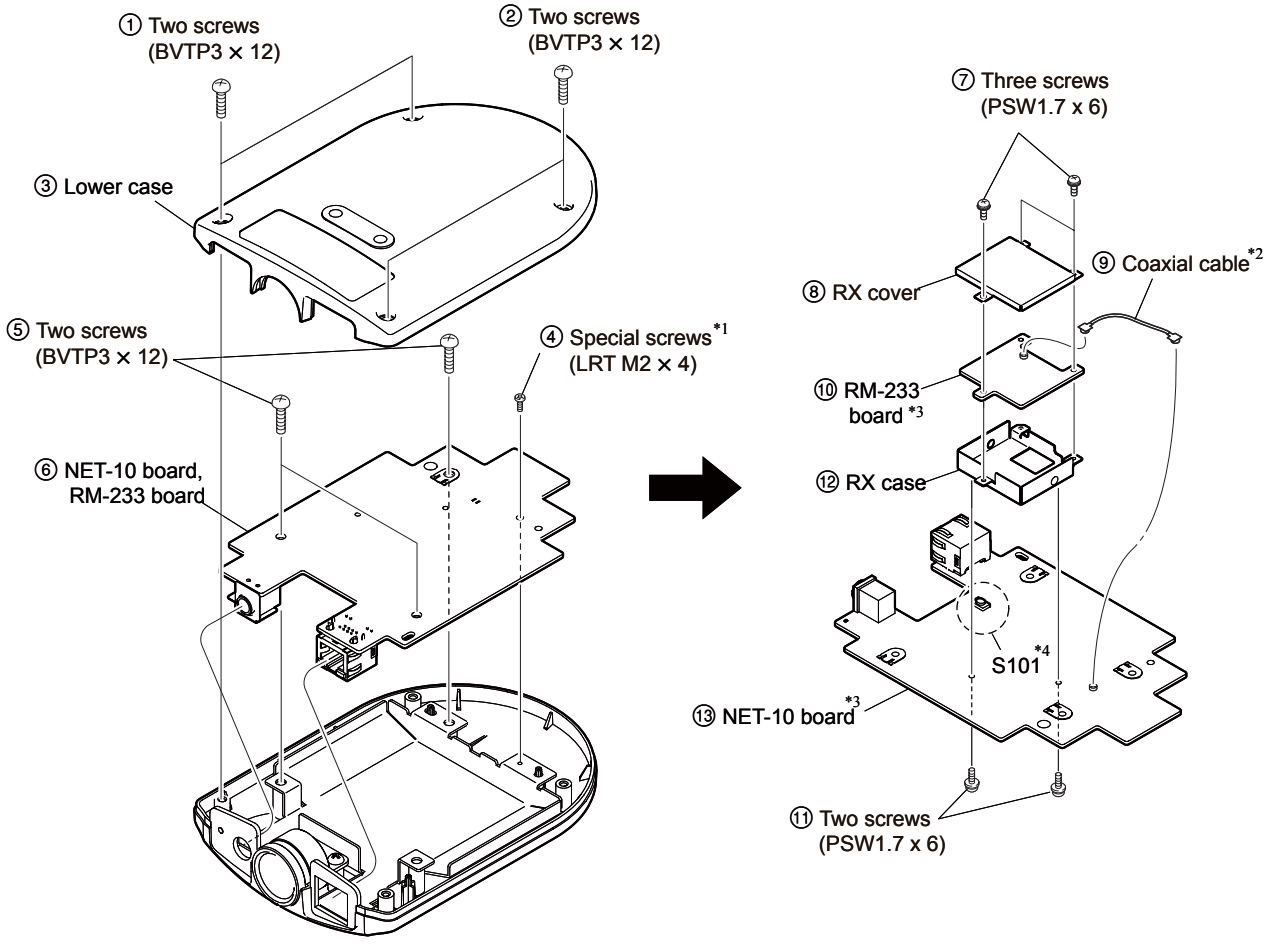

Notes

∗1 Remove the special screw (LRT M2 × 4). To install it, an LRT screwdriver (part number: J-6402-350-A) is required.

∗2 Disconnect the coaxial cable connector. When connecting it, use the connector disconnecting tool. (Refer to "1-6. Installation and Removal of Coaxial Harness.")

∗3 When replacing the RM-223 board or the NET-10 board, be sure to upgrade the firmware.

∗4 Pressing the preset switch (S101) for at least two seconds during power-on restores the factory settings.

1-2. Firmware Update

When replacing the NET-10 board or the RM-223 board, be sure to update the firmware.

1-2-1. Equipment and Preparation

Equipment

- IBM PC/AT compatible personal computer (PC) with an Ethernet (10 Base-T/100 Base-Tx) port
- OS: Windows XP, Windows Vista, or Windows 7
- Network cable (cross or straight)
- Programming software: RMU-01 Updater
- Firmware package

Note

Prepare the latest firmware package.

Note

The firmware package is provided as a ZIP file. Copy it to an arbitrary folder of the PC and unzip it.

Preparation

Install the programming software “RMU-01 Updater” in the PC.

1-2-2. Firmware Update Procedure

Procedure

1. Connect the unit to the PC with the cross network cable.

   Note

   When connecting the unit to the PC through the hub, use the straight network cable.

2. Turn on the power of the unit.

   Note

   When a new RM-223 board is installed onto the existing NET-10 board, the POWER LED (D109) on the NET-10 board blinks for two seconds, but this is no problem.

3. Run the programming software RMU-01 Updater.
4. Enter the IP address setting value for update in “IP Address.”

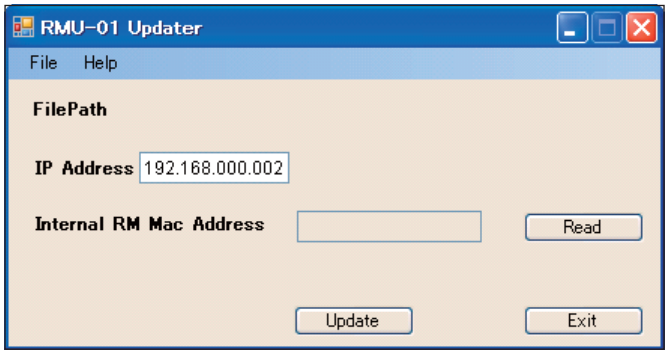

Note

If the IP address is unknown, check the IP address using the supplied software RMU-01 Setting Tool.
For how to use the RMU-01 Setting Tool, refer to “Using the RMU-01 Setting Tool” in the Instruction Manual.

5. Click “Open File” from the “File” menu and select the firmware package.
6. Click the “Update” button. (It takes about one minute for programming.)
7. When the programming is completed, check the firmware version to make sure that the firmware has been updated to the latest version. (For how to check the firmware version, refer to “1-2-4. Checking Firmware Version.”)
8. Click the “Exit” button to exit the programming software RMU-01 Updater.

1-2-3. Checking the Mac Address of the Remote Microcomputer

The Mac address stored of the RM-223 board in the remote microcomputer (IC3002) can be checked using the programming software RMU-01 Updater.

Procedure

1. Connect the unit to the PC with the cross network cable.

   Note

   When connecting the unit to the PC through the hub, use the straight network cable.

2. Turn on the power of the unit.
3. Run the programming software RMU-01 Updater.
4. Enter the IP address setting value in “IP Address.”

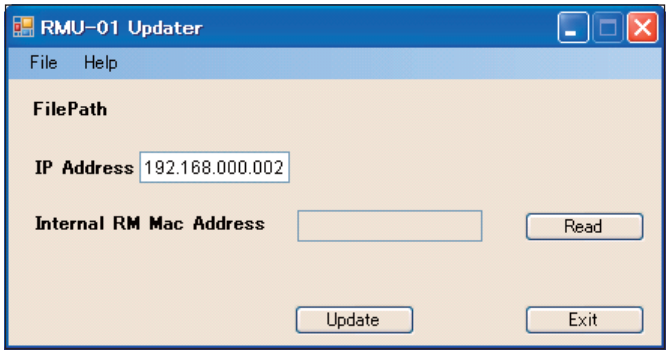

   Note

   If the IP address is unknown, check the IP address using the supplied software RMU-01 Setting Tool.
   For how to use the RMU-01 Setting Tool, refer to “Using the RMU-01 Setting Tool” in the Instruction Manual.

5. Click the “Read” button.
6. The Mac address is displayed in “Internal RM Mac Address.”

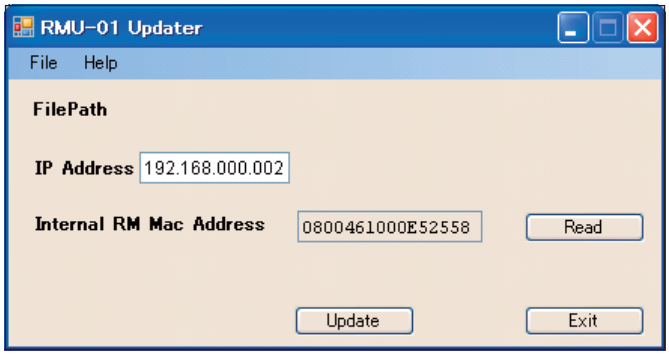

7. Click the “Exit” button to exit the programming software RMU-01 Updater.

1-2-4. Checking Firmware Version

The firmware version can be checked using the programming software RMU-01 Updater.

Procedure

1. Connect the unit to the PC with the cross network cable.

   Note

   When connecting the unit to the PC through the hub, use the straight network cable.

2. Turn on the power of the unit.
3. Run the programming software RMU-01 Updater.
4. Enter the IP address setting value in “IP Address.”

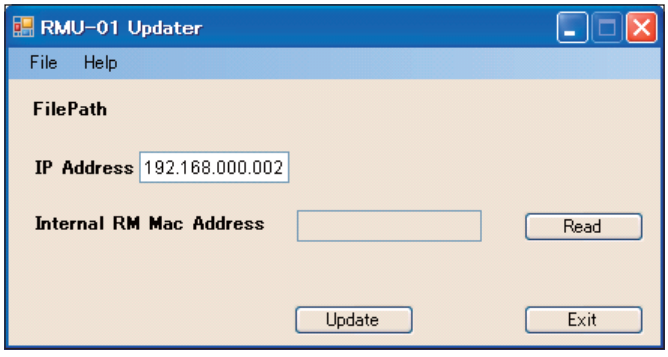

   Note

   If the IP address is unknown, check the IP address using the supplied software RMU-01 Setting Tool.
   For how to use the RMU-01 Setting Tool, refer to “Using the RMU-01 Setting Tool” in the Instruction Manual.

5. Click “Apl Version” from the “Help” menu.

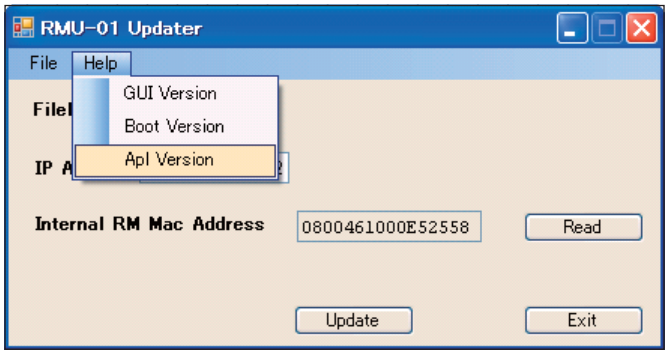

6. The Main Cpu and Remote Cpu firmware versions are displayed.

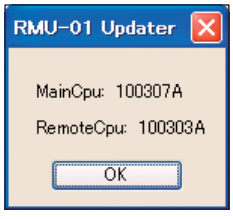

7. Click the “OK” button.
8. Click the “Exit” button to exit the programming software RMU-01 Updater.

1-3. Test Mode

The supplied software RMU-01 Setting Tool allows setting change/check and self-diagnosis of the unit. For how to use the RMU-01 Setting Tool, refer to “Using the RMU-01 Setting Tool” in the Instruction Manual.

Changing/checking settings

The following settings can be changed and checked.

Setting item	Change	Check
Mac Address (Ethernet)	Disabled	Enabled
IP Address	Enabled	Enabled
Subnet Mask	Enabled	Enabled
Name	Enabled	Enabled

Self-diagnosis

The following self-diagnosis items are enabled.

- EEPROM: Diagnosis of the EEPROM
- Flash ROM: Diagnosis of the flash ROM
- RM Module: Diagnosis of the 2.4 GHz transmit/receive module
- Power Source: Indicates the power supply source (from PoE or AC adapter).

The self-diagnosis result of each item is displayed by the RMU-01 Setting Tool.
When self-diagnosis resulted in “NG!”, take action according to the following table.

Error code	Description	Action
0×01	EEPROM read/write error The EEPROM may be broken.	Failure of IC106 Replace the NET-10 board and update the firmware. Then perform self-diagnosis again and confirm that “OK” appears.
0×02	The flash ROM data may be broken	Failure of IC101 Replace the NET-10 board and update the firmware. Then perform self-diagnosis again and confirm that “OK” appears.
0×FF	Ethernet communication timeout	Perform self-diagnosis again and confirm that each item results in “OK.”

1-4. Checking RF Remote Operation

Check the RF remote operation according to the following flow to detect an abnormality in the route from IC102 (CPU)/ NET-10 board through IC3002 (REMOTE CPU)/RM-223 board, IC3003, CN3001, and CN104/NET-10 board to patterns antenna.

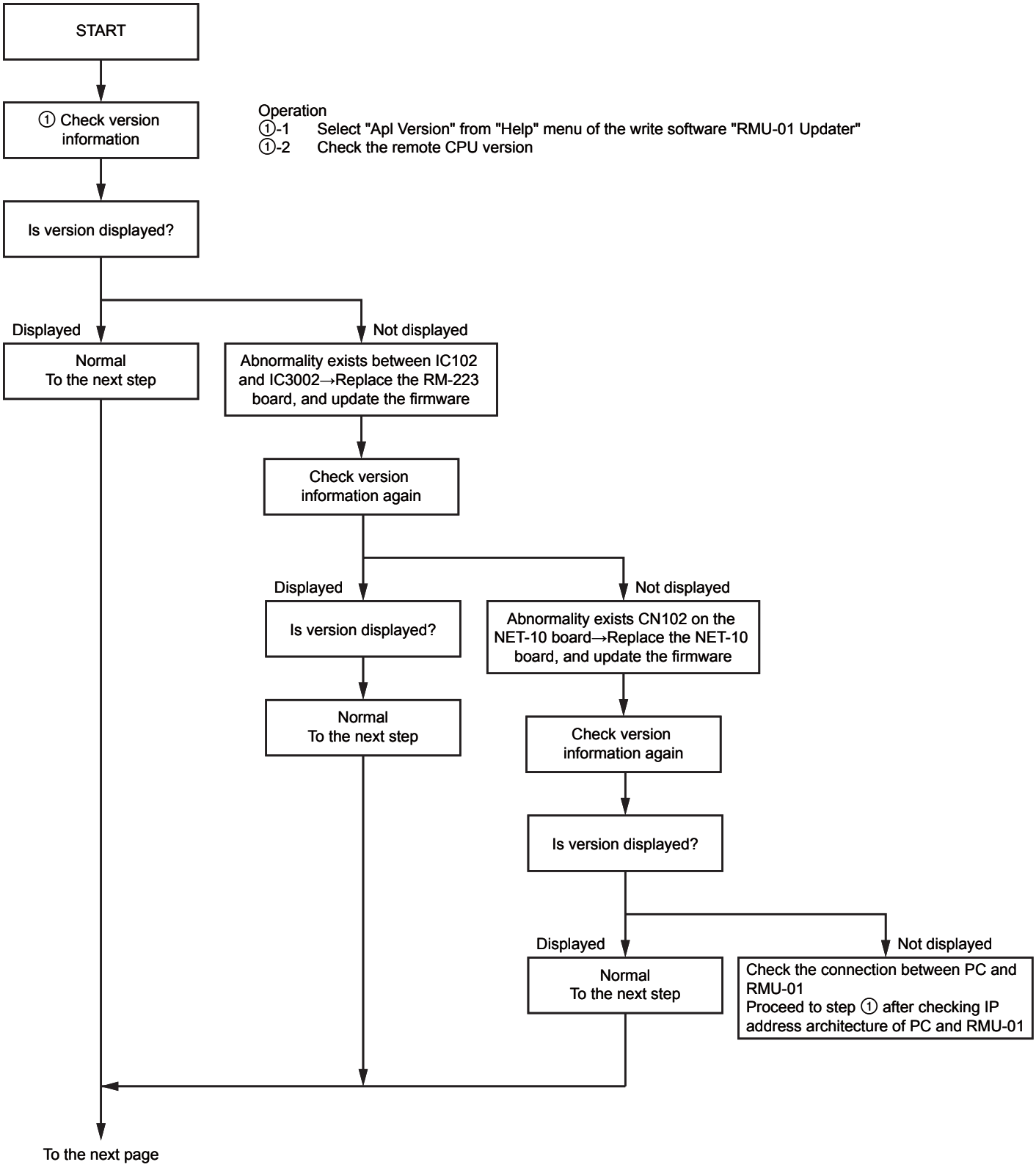

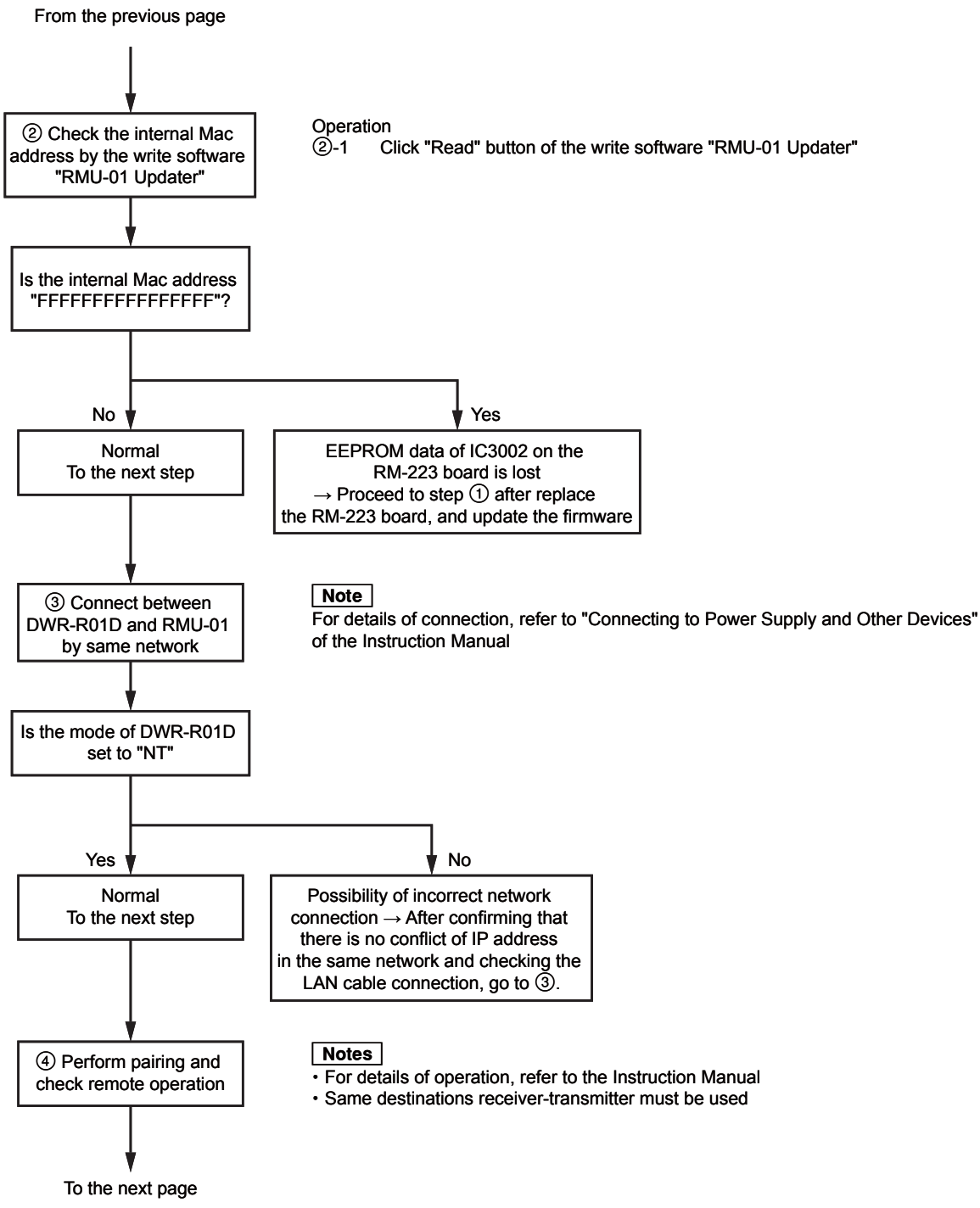
From the previous page
② Check the internal Mac address by the write software "RMU-01 Updater"
Operation
②-1 Click "Read" button of the write software "RMU-01 Updater"
Is the internal Mac address "FFFFFFFFFFFFFFFF"?
No
Yes
Normal
To the next step
EEPROM data of IC3002 on the RM-223 board is lost
→ Proceed to step ① after replace the RM-223 board, and update the firmware
③ Connect between DWR-R01D and RMU-01 by same network
Note
For details of connection, refer to "Connecting to Power Supply and Other Devices" of the Instruction Manual
Is the mode of DWR-R01D set to "NT"
Yes
No
Normal
To the next step
Possibility of incorrect network connection → After confirming that there is no conflict of IP address in the same network and checking the LAN cable connection, go to ③.
④ Perform pairing and check remote operation
Notes
• For details of operation, refer to the Instruction Manual
• Same destinations receiver-transmitter must be used
To the next page

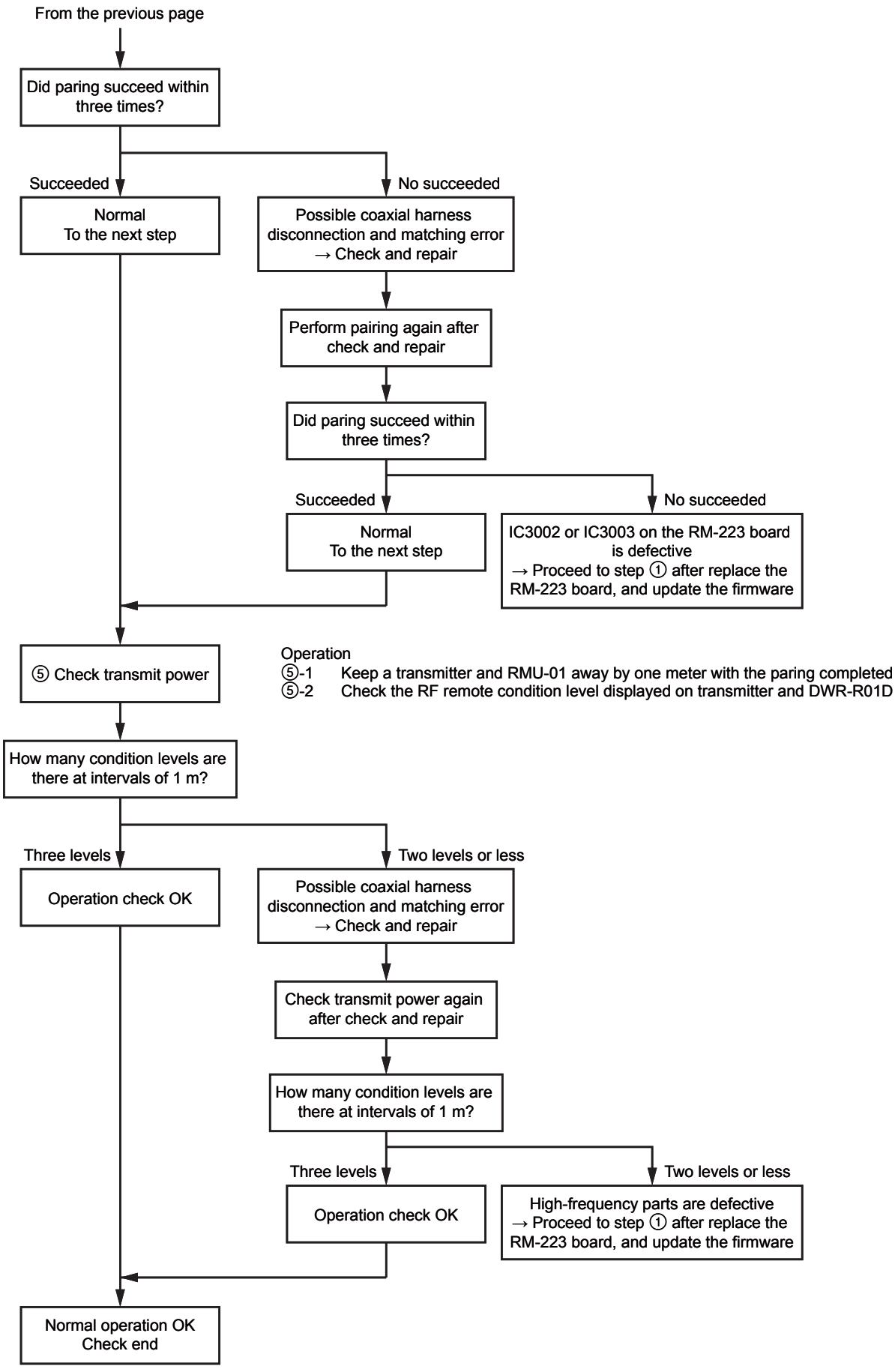
From the previous page
Did paring succeed within three times?
Succeeded
No succeeded
Normal
To the next step
Possible coaxial harness disconnection and matching error
→ Check and repair
Perform pairing again after check and repair
Did paring succeed within three times?
Succeeded
No succeeded
Normal
To the next step
IC3002 or IC3003 on the RM-223 board is defective
→ Proceed to step ① after replace the RM-223 board, and update the firmware
⑤ Check transmit power
Operation
⑤-1 Keep a transmitter and RMU-01 away by one meter with the paring completed
⑤-2 Check the RF remote condition level displayed on transmitter and DWR-R01D
How many condition levels are there at intervals of 1 m?
Three levels
Two levels or less
Operation check OK
Possible coaxial harness disconnection and matching error
→ Check and repair
Check transmit power again after check and repair
How many condition levels are there at intervals of 1 m?
Three levels
Two levels or less
Operation check OK
High-frequency parts are defective
→ Proceed to step ① after replace the RM-223 board, and update the firmware
Normal operation OK
Check end

1-5. Recommended Power Cord

WARNING

- Never use an injured power cord. It may cause a fire or electric shock.
- The power cord is not supplied in this unit. Use the specified power cord when connecting.

To get a power cord, please contact your local Sony Sales Office/service Center.

For customers in the Japan

① Power cord set 125 V 2.5 A (2.0 m) ⚠ 1-834-600-11

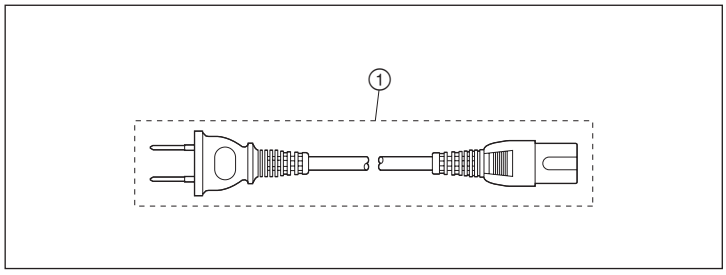

For customers in the U.S.A and Canada

① Power cord 125 V 7 A (2.0 m) ⚠ 1-757-562-11

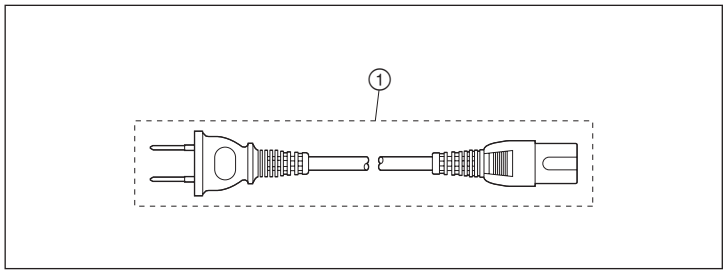

For customers in European countries

① Power cord 250 V 2.5 A (2.0 m) ⚠ 1-575-131-82

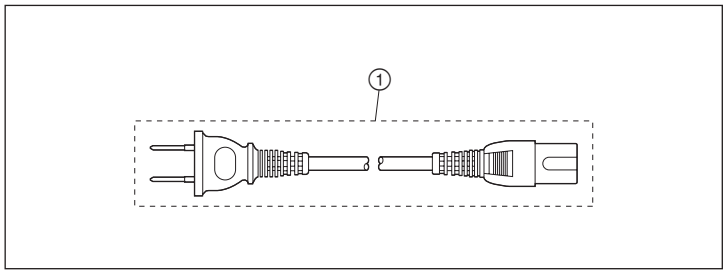

If the unit is used in the area except above, please contact your local Sony Sales Office/Service Center.

WARNING

- Use the approved power Cord (3-core mains lead)/Appliance Connector/Plug with earth connection that conforms to the safety regulations of each country if applicable.
- Use the Power Cord (3-core mains lead)/Appliance Connector/Plug Conforming to the proper ratings (Voltage, Ampere).

1-6. Installation and Removal of Coaxial Harness

Tool required

Use the tool below when replacing a coaxial harness.
Parts name: Connector removal tool
Parts No.: J-6407-150-A

Installation

1. Slide the connector removal tool in the direction indicated by arrow ① and interposes the connector.
2. Adjust the position to the connector on the board and push the coaxial harness vertically in the direction indicated by arrow ②.
3. Slide the connector removal tool in the direction indicated by arrow ③ and removes it.
4. Push the connector by the even plane of a skewer.

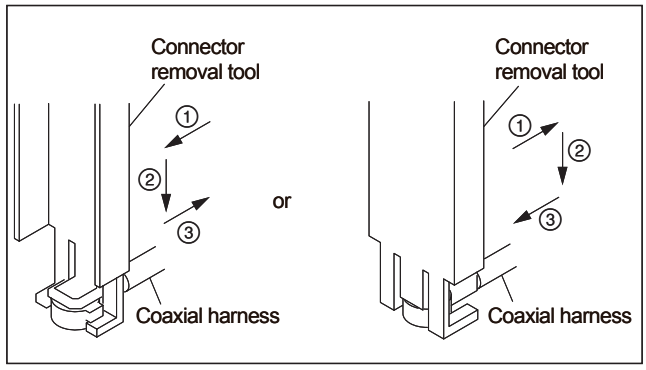

Removal

1. Slide the connector removal tool in the direction indicated by arrow ① and installs it.
2. Pull out the connector removal tool vertically in the direction indicated by arrow ②.
3. Remove the connector removal tool from the coaxial harness in the direction indicated by arrow ③.

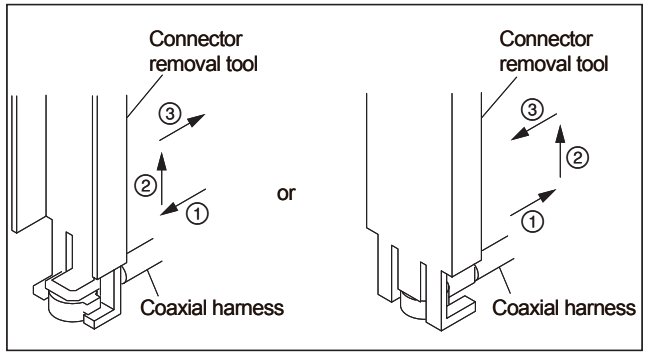

1-7. Lead-free Solder

Boards requiring use of lead-free solder are printed with a lead free mark (LF) indicating the solder contains no lead.
(Caution: Some printed circuit boards may not come printed with the lead free mark due to their particular size.)

: LEAD FREE MARK

Notes

- Be sure to use the lead-free solder for the printed circuit board printed with the lead free mark.
- The lead-free solder melts at a temperature about 40 °C higher than the ordinary solder, therefore, it is recommended to use the soldering iron having a temperature regulator.
- The ordinary soldering iron can be used but the iron tip has to be applied to the solder joint for a slightly longer time. The printed pattern (copper foil) may peel away if the heated tip is applied for too long, so be careful.

Section 2
Spare Parts

2-1. Notes on Repair Parts

1. Safety Related Components Warning

WARNING

Components marked ⚠ are critical to safe operation. Therefore, specified parts should be used in the case of replacement.

2. Standardization of Parts

Some repair parts supplied by Sony differ from those used for the unit. These are because of parts commonality and improvement.

3. Stock of Parts

Parts marked with "o" at SP (Supply Code) column of the spare parts list may not be stocked. Therefore, the delivery date will be delayed.

4. Harness

Harnesses with no part number are not registered as spare parts.

2-1. 補修部品注意事項

1. 安全重要部品

⚠警告

⚠印のついた部品は安全性を維持するために重要な部品です。したがって，交換する時は必ず指定の部品を使ってください。

2. 部品の共通化

ソニーから供給する補修用部品は，セットに使われているものと異なることがあります。
これは部品の共通化，改良等によるものです。

3. 部品の在庫

部品表の SP（Supply code）欄に "o" で示される部品は在庫していないことがあり，納期が長くなることがあります。

4. ハーネス

部品番号の記載されていないハーネスは，サービス部品として登録されていません。

2-2. Exploded Views

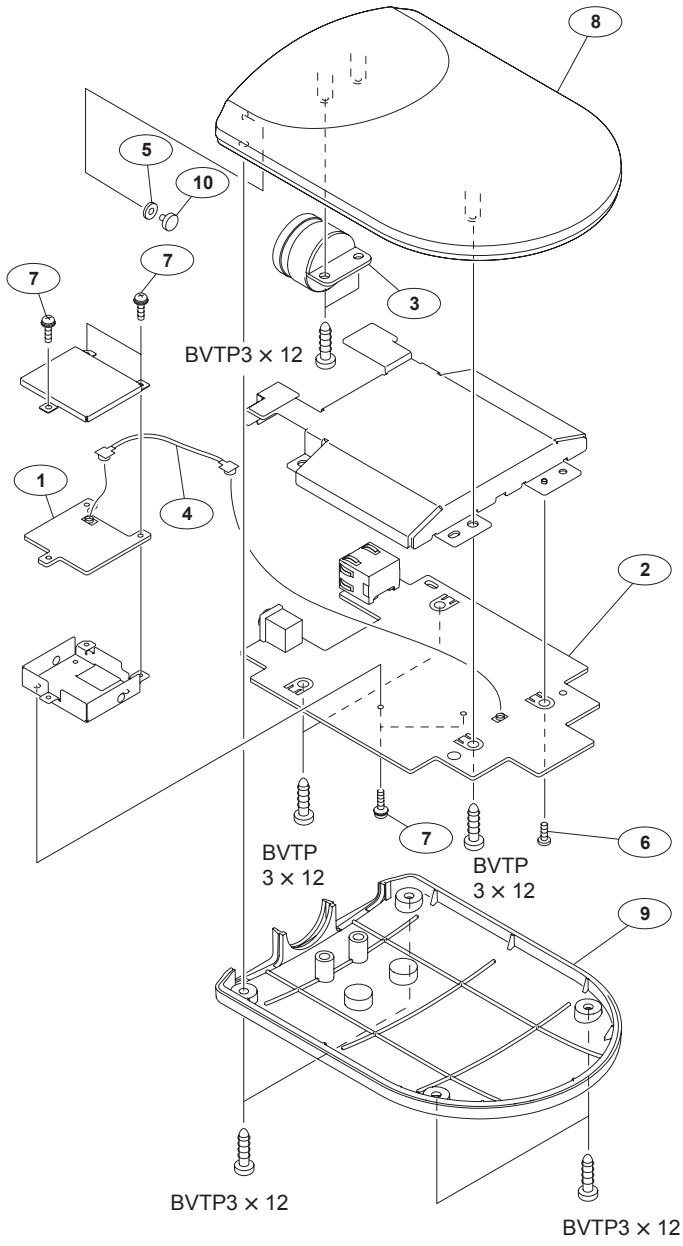

No.	Part No.	SP	Description
1	A-1772-804-A	s	MOUNTED CIRCUIT BOARD, RM-223
2	A-1773-757-A	s	MOUNTED CIRCUIT BOARD, NET-10
3	X-2548-028-1	s	STAND SCREW ASSY
4	1-837-696-11	s	CABLE, CONNECTOR WITH COAXIAL
5	2-344-100-02	s	WASHER
6	2-540-969-13	s	SCREW (M2X5), LRT
7	4-109-127-02	s	SCREW,+PSW M1.7X6
8	4-182-205-01	s	CASE , UPPER
9	4-182-206-01	s	CASE, LOWER
10	4-931-646-01	s	LENS, LED
	7-685-648-79	s	SCREW +BVTP 3X12 TYPE2 IT-3

2-3. Electrical Parts List

NET-10 COMPL BOARD

Ref. No. or Q'ty	Part No.	SP	Description
1pc	A-1773-757-A	s	MOUNTED CIRCUIT BOARD, NET-10 COMPL
C100	1-112-692-81	s	CAP,CHIP CERAMIC1000PF CH 1005
C101	1-114-582-91	o	CAP, CERAMIC 0.1MF B 1005
C102	1-114-983-91	s	CAP, CHIP CERAMIC 2.2MF B 1608
C103	1-114-582-91	o	CAP, CERAMIC 0.1MF B 1005
C104	1-114-983-91	s	CAP, CHIP CERAMIC 2.2MF B 1608
C105	1-114-582-91	o	CAP, CERAMIC 0.1MF B 1005
C106	1-100-881-91	s	CAP, CERAMIC 47MF C (3216)
C107	1-100-881-91	s	CAP, CERAMIC 47MF C (3216)
C108	1-114-582-91	o	CAP, CERAMIC 0.1MF B 1005
C109	1-114-582-91	o	CAP, CERAMIC 0.1MF B 1005
C110	1-135-787-91	s	CAP, CHIP CERAMIC 1000PF
C111	1-135-787-91	s	CAP, CHIP CERAMIC 1000PF
C112	1-135-787-91	s	CAP, CHIP CERAMIC 1000PF
C113	1-100-597-91	s	CAP, CHIP CERAMIC 0.1MF B 1608
C114	1-164-858-81	s	CAP, CHIP CERAMIC 22PF CH 1005
C115	1-100-597-91	s	CAP, CHIP CERAMIC 0.1MF B 1608
C116	1-164-858-81	s	CAP, CHIP CERAMIC 22PF CH 1005
C117	1-114-582-91	o	CAP, CERAMIC 0.1MF B 1005
C118	1-114-582-91	o	CAP, CERAMIC 0.1MF B 1005
C119	1-114-582-91	o	CAP, CERAMIC 0.1MF B 1005
C120	1-114-582-91	o	CAP, CERAMIC 0.1MF B 1005
C121	1-112-692-81	s	CAP,CHIP CERAMIC1000PF CH 1005
C122	1-114-582-91	o	CAP, CERAMIC 0.1MF B 1005
C123	1-114-582-91	o	CAP, CERAMIC 0.1MF B 1005
C124	1-112-317-11	s	CAP, CHIP CERAMIC 0.1MF (2012)
C125	1-114-582-91	o	CAP, CERAMIC 0.1MF B 1005
C126	1-100-581-81	s	CAP,CHIP CERAMIC0.0047MF B1005
C127	1-114-582-91	o	CAP, CERAMIC 0.1MF B 1005
C128	1-114-582-91	o	CAP, CERAMIC 0.1MF B 1005
C129	1-114-098-21	s	CAP, CERAMIC 2.2MF C (2012)
C130	1-112-692-81	s	CAP,CHIP CERAMIC1000PF CH 1005
C131	1-114-582-91	o	CAP, CERAMIC 0.1MF B 1005
C132	1-109-900-91	s	CAP,CHIP CERAMIC 470PF CH 3216
C133	1-112-317-11	s	CAP, CHIP CERAMIC 0.1MF (2012)
C134	1-112-692-81	s	CAP,CHIP CERAMIC1000PF CH 1005
C135	1-112-317-11	s	CAP, CHIP CERAMIC 0.1MF (2012)
C136	1-112-692-81	s	CAP,CHIP CERAMIC1000PF CH 1005
C137	1-116-037-21	s	CAP, CHIP TYPE ELECT 47MF
C138	1-114-236-21	s	CAP, CERAMIC 22MF B (3225)
C139	1-112-692-81	s	CAP,CHIP CERAMIC1000PF CH 1005
C140	1-114-582-91	o	CAP, CERAMIC 0.1MF B 1005
C141	1-114-582-91	o	CAP, CERAMIC 0.1MF B 1005
C142	1-114-582-91	o	CAP, CERAMIC 0.1MF B 1005
C143	1-109-900-91	s	CAP,CHIP CERAMIC 470PF CH 3216
C146	1-114-214-81	s	CAP,CHIP CERAMIC470PF CH1005
C147	1-112-692-81	s	CAP,CHIP CERAMIC1000PF CH 1005
C148	1-128-401-21	s	CAP, ELECT 100MF 8X6
C150	1-114-582-91	o	CAP, CERAMIC 0.1MF B 1005
C151	1-114-582-91	o	CAP, CERAMIC 0.1MF B 1005
C152	1-114-236-21	s	CAP, CERAMIC 22MF B (3225)
C153	1-114-582-91	o	CAP, CERAMIC 0.1MF B 1005
C154	1-112-692-81	s	CAP,CHIP CERAMIC1000PF CH 1005
C159	1-164-866-81	s	CAP, CHIP CERAMIC 47PF CH 1005
C160	1-164-866-81	s	CAP, CHIP CERAMIC 47PF CH 1005
C161	1-164-866-81	s	CAP, CHIP CERAMIC 47PF CH 1005
C162	1-164-866-81	s	CAP, CHIP CERAMIC 47PF CH 1005
C163	1-114-582-91	o	CAP, CERAMIC 0.1MF B 1005

(NET-10 COMPL BOARD)

Ref. No. or Q'ty	Part No.	SP	Description
C164	1-112-317-11	s	CAP, CHIP CERAMIC 0.1MF (2012)
C167	1-114-582-91	o	CAP, CERAMIC 0.1MF B 1005
C168	1-114-582-91	o	CAP, CERAMIC 0.1MF B 1005
C169	1-114-582-91	o	CAP, CERAMIC 0.1MF B 1005
C170	1-114-582-91	o	CAP, CERAMIC 0.1MF B 1005
C171	1-114-582-91	o	CAP, CERAMIC 0.1MF B 1005
C172	1-114-582-91	o	CAP, CERAMIC 0.1MF B 1005
C173	1-114-582-91	o	CAP, CERAMIC 0.1MF B 1005
C174	1-114-582-91	o	CAP, CERAMIC 0.1MF B 1005
C175	1-114-582-91	o	CAP, CERAMIC 0.1MF B 1005
C176	1-114-582-91	o	CAP, CERAMIC 0.1MF B 1005
C177	1-114-582-91	o	CAP, CERAMIC 0.1MF B 1005
C178	1-114-582-91	o	CAP, CERAMIC 0.1MF B 1005
C202	1-164-839-81	s	CAP,CHIP CERAMIC 0.5PF CK 1005
C301	1-100-565-91	s	CAP, CHIP CERAMIC 0.47MF B2012
C302	1-112-815-91	s	CAP, CERAMIC 10MF C (1608)
C303	1-100-565-91	s	CAP, CHIP CERAMIC 0.47MF B2012
C304	1-112-692-81	s	CAP,CHIP CERAMIC1000PF CH 1005
C305	1-112-692-81	s	CAP,CHIP CERAMIC1000PF CH 1005
C306	1-112-692-81	s	CAP,CHIP CERAMIC1000PF CH 1005
C308	1-100-565-91	s	CAP, CHIP CERAMIC 0.47MF B2012
C310	1-100-565-91	s	CAP, CHIP CERAMIC 0.47MF B2012
C312	1-164-882-81	s	CAP,CHIP CERAMIC 220PF CH 1005
C313	1-164-870-81	s	CAP, CHIP CERAMIC 68PF CH 1005
C314	1-164-882-81	s	CAP,CHIP CERAMIC 220PF CH 1005
C315	1-164-847-81	s	CAP, CHIP CERAMIC 7PF CH 1005
C317	1-100-880-91	s	CAP, CERAMIC 100MF C (3225)
C318	1-100-880-91	s	CAP, CERAMIC 100MF C (3225)
C319	1-100-881-91	s	CAP, CERAMIC 47MF C (3216)
C320	1-112-746-11	s	CAP, CERAMIC 4.7MF B (1608)
C321	1-100-053-21	s	CAP, ELECT 220MF 6.3X5.7
C322	1-100-053-21	s	CAP, ELECT 220MF 6.3X5.7
C323	1-114-582-91	o	CAP, CERAMIC 0.1MF B 1005
C324	1-128-401-21	s	CAP, ELECT 100MF 8X6
C325	1-128-401-21	s	CAP, ELECT 100MF 8X6
CN100	⚠ 1-817-196-11	s	JACK, MODULAR
CN101	1-778-965-21	s	CONNECTOR 12P
CN102	1-779-201-21	s	CONNECTOR, BOARD TO BOARD 30P
CN301	1-774-741-11	s	JACK, DC
D100	6-500-839-01	s	DIODE D1UBA80
D101	6-500-839-01	s	DIODE D1UBA80
D102	6-502-197-01	s	DI SML-D12M8WT86SM
D103	8-719-080-75	s	DIODE M1FL20U-4063
D104	8-719-080-75	s	DIODE M1FL20U-4063
D105	8-719-080-75	s	DIODE M1FL20U-4063
D106	8-719-080-75	s	DIODE M1FL20U-4063
D107	6-501-218-01	s	DIODE ST03-68F1
D108	6-502-197-01	s	DI SML-D12M8WT86SM
D109	6-502-197-01	s	DI SML-D12M8WT86SM
D110	6-501-218-01	s	DIODE ST03-68F1
D121	6-500-776-01	s	DI DF3A6.8FV(TL3S
D122	6-500-776-01	s	DI DF3A6.8FV(TL3S
D123	6-500-776-01	s	DI DF3A6.8FV(TL3S
D124	6-500-776-01	s	DI DF3A6.8FV(TL3S
D125	6-500-776-01	s	DI DF3A6.8FV(TL3S
D126	6-500-776-01	s	DI DF3A6.8FV(TL3S
D127	6-500-776-01	s	DI DF3A6.8FV(TL3S
D128	6-500-776-01	s	DI DF3A6.8FV(TL3S
D129	6-500-776-01	s	DI DF3A6.8FV(TL3S

(NET-10 COMPL BOARD)

Ref. No. or Q'ty	Part No.	SP	Description
D301	6-501-123-01	s	DIODE RB160M-60TR
D302	6-501-123-01	s	DIODE RB160M-60TR
D303	6-501-361-01	s	DIODE RB051LA-40TR
D304	8-719-083-71	s	DI UDZSUSTE-1730B
D305	8-719-083-71	s	DI UDZSUSTE-1730B
E101	1-535-877-22	s	CHIP, CHECKER
E102	1-535-877-22	s	CHIP, CHECKER
FB100	1-469-081-21	s	INDUCTOR, FERRITE BEAD (1005)
FB301	1-469-122-21	s	FERRITE, EMI (SMD) (1608)
FB302	1-414-760-21	s	FERRITE, EMI (SMD) (1608)
FB303	1-414-760-21	s	FERRITE, EMI (SMD) (1608)
FB304	1-414-760-21	s	FERRITE, EMI (SMD) (1608)
FL301	1-233-893-21	s	FILTER, CHIP EMI
IC100	6-713-754-01	s	IC W9864G6IH-6J-ER10
IC103	8-759-698-31	s	IC TC7WH74FK(TE85R)
IC105	6-708-324-01	s	IC R3112N301A-TR-FA
IC301	6-708-324-01	s	IC R3112N301A-TR-FA
IC302	6-704-512-01	s	IC TPS62050DGSR
IC303	6-708-657-01	s	IC XC9201D09AKR
L100	1-416-345-21	s	COIL, CHOKE 22UH
L101	1-456-390-21	s	COMMOM MODE CHOKE COIL
L102	1-456-390-21	s	COMMOM MODE CHOKE COIL
L103	1-416-511-21	s	COIL, CHOKE 47.0UH
L201	1-414-832-21	s	INDUCTOR, CHIP 2.2NH (1005)
L301	1-416-344-21	s	COIL, CHOKE 10UH
L302	1-416-345-21	s	COIL, CHOKE 22UH
L303	1-416-511-21	s	COIL, CHOKE 47.0UH
Q101	6-550-384-01	s	TRANSISTOR DTC123JMFS6T2L
Q106	8-729-928-55	s	TRANSISTOR DTA123JE-TL
Q107	8-729-928-55	s	TRANSISTOR DTA123JE-TL
Q301	6-552-494-01	s	TR SI2307CDS-T1-GE3
Q303	6-550-384-01	s	TRANSISTOR DTC123JMFS6T2L
Q304	6-552-494-01	s	TR SI2307CDS-T1-GE3
R100	1-218-990-81	s	CONDUCTOR, CHIP (1005)
R101	1-208-903-81	s	RES, CHIP 4.7K (1005)
R102	1-208-903-81	s	RES, CHIP 4.7K (1005)
R103	1-208-903-81	s	RES, CHIP 4.7K (1005)
R104	1-208-903-81	s	RES, CHIP 4.7K (1005)
R106	1-218-990-81	s	CONDUCTOR, CHIP (1005)
R107	1-218-990-81	s	CONDUCTOR, CHIP (1005)
R108	1-218-937-81	s	RES, CHIP 47
R109	1-218-937-81	s	RES, CHIP 47
R110	1-218-937-81	s	RES, CHIP 47
R111	1-218-937-81	s	RES, CHIP 47
R112	1-218-937-81	s	RES, CHIP 47
R113	1-218-937-81	s	RES, CHIP 47
R114	1-218-937-81	s	RES, CHIP 47
R115	1-218-937-81	s	RES, CHIP 47
R116	1-218-937-81	s	RES, CHIP 47
R117	1-218-937-81	s	RES, CHIP 47
R118	1-218-937-81	s	RES, CHIP 47
R119	1-218-937-81	s	RES, CHIP 47
R120	1-218-937-81	s	RES, CHIP 47
R121	1-218-937-81	s	RES, CHIP 47
R122	1-218-937-81	s	RES, CHIP 47

(NET-10 COMPL BOARD)

Ref. No. or Q'ty	Part No.	SP	Description
R123	1-218-937-81	s	RES, CHIP 47
R124	1-218-937-81	s	RES, CHIP 47
R125	1-208-903-81	s	RES, CHIP 4.7K (1005)
R126	1-208-903-81	s	RES, CHIP 4.7K (1005)
R127	1-208-903-81	s	RES, CHIP 4.7K (1005)
R128	1-208-903-81	s	RES, CHIP 4.7K (1005)
R129	1-208-903-81	s	RES, CHIP 4.7K (1005)
R130	1-208-860-81	s	RES, CHIP 75 (1005)
R131	1-208-860-81	s	RES, CHIP 75 (1005)
R132	1-216-864-91	s	CONDUCTOR, CHIP (1608)
R133	1-208-903-81	s	RES, CHIP 4.7K (1005)
R134	1-220-870-81	s	RES, CHIP 10 (1005)
R135	1-220-870-81	s	RES, CHIP 10 (1005)
R136	1-218-851-91	s	RES, CHIP 1.5K (1608)
R138	1-208-903-81	s	RES, CHIP 4.7K (1005)
R139	1-208-903-81	s	RES, CHIP 4.7K (1005)
R140	1-208-911-81	s	RES, CHIP 10K (1005)
R141	1-218-835-91	s	RES, CHIP 330 (1608)
R142	1-245-567-81	s	RES, CHIP 49.9 (1005)
R143	1-218-937-81	s	RES, CHIP 47
R144	1-245-567-81	s	RES, CHIP 49.9 (1005)
R145	1-218-990-81	s	CONDUCTOR, CHIP (1005)
R146	1-218-937-81	s	RES, CHIP 47
R147	1-218-937-81	s	RES, CHIP 47
R148	1-208-863-81	s	RES, CHIP 100 (1005)
R149	1-208-903-81	s	RES, CHIP 4.7K (1005)
R150	1-220-870-81	s	RES, CHIP 10 (1005)
R151	1-208-903-81	s	RES, CHIP 4.7K (1005)
R152	1-220-870-81	s	RES, CHIP 10 (1005)
R153	1-218-937-81	s	RES, CHIP 47
R154	1-218-937-81	s	RES, CHIP 47
R155	1-218-990-81	s	CONDUCTOR, CHIP (1005)
R156	1-208-715-11	s	RES, CHIP 22K (1005)
R157	1-208-897-81	s	RES, CHIP 2.7K (1005)
R158	1-218-937-81	s	RES, CHIP 47
R159	1-208-865-81	s	RES, CHIP 120 (1005)
R160	1-208-903-81	s	RES, CHIP 4.7K (1005)
R161	1-218-937-81	s	RES, CHIP 47
R162	1-208-935-81	s	RES, CHIP 100K (1005)
R163	1-218-989-81	s	RES, CHIP 1M
R164	1-218-937-81	s	RES, CHIP 47
R165	1-220-870-81	s	RES, CHIP 10 (1005)
R166	1-218-937-81	s	RES, CHIP 47
R167	1-218-990-81	s	CONDUCTOR, CHIP (1005)
R168	1-208-859-81	s	RES, CHIP 68 (1005)
R169	1-218-937-81	s	RES, CHIP 47
R170	1-218-937-81	s	RES, CHIP 47
R171	1-208-859-81	s	RES, CHIP 68 (1005)
R172	1-208-911-81	s	RES, CHIP 10K (1005)
R173	1-218-933-81	s	RES, CHIP 22
R174	1-218-989-11	s	RES, CHIP 1M (1005)
R175	1-208-897-81	s	RES, CHIP 2.7K (1005)
R176	1-218-851-91	s	RES, CHIP 1.5K (1608)
R177	1-220-336-91	s	RES,SQUARE TYPE CHIP 220K 4532
R178	1-218-953-81	s	RES, CHIP 1.0K
R179	1-218-933-81	s	RES, CHIP 22
R180	1-208-881-81	s	RES, CHIP 560 (1005)
R181	1-208-881-81	s	RES, CHIP 560 (1005)
R182	1-208-903-81	s	RES, CHIP 4.7K (1005)

(NET-10 COMPL BOARD)

Ref. No. or Q'ty	Part No.	SP	Description
R183	1-208-903-81	s	RES, CHIP 4.7K (1005)
R184	1-208-903-81	s	RES, CHIP 4.7K (1005)
R185	1-208-903-81	s	RES, CHIP 4.7K (1005)
R186	1-208-903-81	s	RES, CHIP 4.7K (1005)
R187	1-208-903-81	s	RES, CHIP 4.7K (1005)
R188	1-240-247-91	s	RES, SQUARE TYPE CHIP 0.1
R189	1-208-903-81	s	RES, CHIP 4.7K (1005)
R190	1-218-835-91	s	RES, CHIP 330 (1608)
R191	1-218-990-81	s	CONDUCTOR, CHIP (1005)
R192	1-218-990-81	s	CONDUCTOR, CHIP (1005)
R193	1-208-859-81	s	RES, CHIP 68 (1005)
R194	1-208-859-81	s	RES, CHIP 68 (1005)
R195	1-208-859-81	s	RES, CHIP 68 (1005)
R196	1-208-859-81	s	RES, CHIP 68 (1005)
R197	1-208-859-81	s	RES, CHIP 68 (1005)
R198	1-208-859-81	s	RES, CHIP 68 (1005)
R199	1-218-953-81	s	RES, CHIP 1.0K
R200	1-218-937-81	s	RES, CHIP 47
R201	1-208-860-81	s	RES, CHIP 75 (1005)
R202	1-208-935-81	s	RES, CHIP 100K (1005)
R203	1-208-903-81	s	RES, CHIP 4.7K (1005)
R204	1-208-903-81	s	RES, CHIP 4.7K (1005)
R205	1-208-903-81	s	RES, CHIP 4.7K (1005)
R206	1-218-990-81	s	CONDUCTOR, CHIP (1005)
R207	1-208-903-81	s	RES, CHIP 4.7K (1005)
R208	1-208-903-81	s	RES, CHIP 4.7K (1005)
R209	1-218-990-81	s	CONDUCTOR, CHIP (1005)
R210	1-208-903-81	s	RES, CHIP 4.7K (1005)
R211	1-218-990-81	s	CONDUCTOR, CHIP (1005)
R212	1-218-851-91	s	RES, CHIP 1.5K (1608)
R213	1-218-851-91	s	RES, CHIP 1.5K (1608)
R214	1-208-903-81	s	RES, CHIP 4.7K (1005)
R215	1-218-937-81	s	RES, CHIP 47
R216	1-218-990-81	s	CONDUCTOR, CHIP (1005)
R217	1-208-903-81	s	RES, CHIP 4.7K (1005)
R219	1-218-953-81	s	RES, CHIP 1.0K
R220	1-218-990-81	s	CONDUCTOR, CHIP (1005)
R221	1-218-937-81	s	RES, CHIP 47
R222	1-218-933-81	s	RES, CHIP 22
R223	1-218-937-81	s	RES, CHIP 47
R224	1-218-937-81	s	RES, CHIP 47
R225	1-218-937-81	s	RES, CHIP 47
R226	1-218-937-81	s	RES, CHIP 47
R227	1-218-937-81	s	RES, CHIP 47
R228	1-218-937-81	s	RES, CHIP 47
R229	1-218-937-81	s	RES, CHIP 47
R233	1-218-937-81	s	RES, CHIP 47
R234	1-216-864-91	s	CONDUCTOR, CHIP (1608)
R235	1-216-864-91	s	CONDUCTOR, CHIP (1608)
R236	1-216-864-91	s	CONDUCTOR, CHIP (1608)
R237	1-216-864-91	s	CONDUCTOR, CHIP (1608)
R251	1-218-937-81	s	RES, CHIP 47
R252	1-218-937-81	s	RES, CHIP 47
R253	1-218-937-81	s	RES, CHIP 47
R254	1-218-937-81	s	RES, CHIP 47
R255	1-218-937-81	s	RES, CHIP 47
R256	1-218-937-81	s	RES, CHIP 47
R257	1-218-937-81	s	RES, CHIP 47
R258	1-218-937-81	s	RES, CHIP 47

(NET-10 COMPL BOARD)

Ref. No. or Q'ty	Part No.	SP	Description
R259	1-218-937-81	s	RES, CHIP 47
R260	1-218-937-81	s	RES, CHIP 47
R261	1-218-937-81	s	RES, CHIP 47
R262	1-218-937-81	s	RES, CHIP 47
R263	1-218-937-81	s	RES, CHIP 47
R264	1-218-937-81	s	RES, CHIP 47
R265	1-218-937-81	s	RES, CHIP 47
R266	1-218-937-81	s	RES, CHIP 47
R301	1-208-715-11	s	RES, CHIP 22K (1005)
R304	1-216-864-91	s	CONDUCTOR, CHIP (1608)
R305	1-218-990-81	s	CONDUCTOR, CHIP (1005)
R306	1-216-864-91	s	CONDUCTOR, CHIP (1608)
R307	1-208-903-81	s	RES, CHIP 4.7K (1005)
R308	1-208-895-81	s	RES, CHIP 2.2K (1005)
R309	1-219-611-21	s	RES, CHIP (SQUARE TYPE) 0.047
R310	1-208-935-81	s	RES, CHIP 100K (1005)
R311	1-208-903-81	s	RES, CHIP 4.7K (1005)
R312	1-208-935-81	s	RES, CHIP 100K (1005)
R314	1-208-927-81	s	RES, CHIP 47K (1005)
R315	1-208-715-11	s	RES, CHIP 22K (1005)
R316	1-218-990-81	s	CONDUCTOR, CHIP (1005)
R317	1-218-989-81	s	RES, CHIP 1M
R318	1-218-989-81	s	RES, CHIP 1M
R319	1-208-913-81	s	RES, CHIP 12K (1005)
R320	1-208-947-81	s	RES, CHIP 330K (1005)
R321	1-208-715-11	s	RES, CHIP 22K (1005)
R322	1-208-935-81	s	RES, CHIP 100K (1005)
R323	1-218-990-81	s	CONDUCTOR, CHIP (1005)
R324	1-208-947-81	s	RES, CHIP 330K (1005)
R325	1-208-935-81	s	RES, CHIP 100K (1005)
R326	1-218-970-11	s	RES, CHIP 27K (1005)
R501	1-208-903-81	s	RES, CHIP 4.7K (1005)
R502	1-208-903-81	s	RES, CHIP 4.7K (1005)
R503	1-208-903-81	s	RES, CHIP 4.7K (1005)
R504	1-208-903-81	s	RES, CHIP 4.7K (1005)
R505	1-218-953-81	s	RES, CHIP 1.0K
RB100	1-234-377-21	s	RES, NETWORK 4.7K (1005X4)
S101	1-798-156-21	s	SWITCH, TACTILE
T100	⚠ 1-443-143-21	s	TRANSFORMER, PULSE
T101	⚠ 1-445-878-11	s	TRANSFORMER, FLYBACK (FOR POE)
THP101	⚠ 1-803-353-21	s	THERMISTOR, POSITIVE
THP102	⚠ 1-803-353-21	s	THERMISTOR, POSITIVE
THP103	⚠ 1-803-353-21	s	THERMISTOR, POSITIVE
THP104	⚠ 1-803-353-21	s	THERMISTOR, POSITIVE
THP105	⚠ 1-803-353-21	s	THERMISTOR, POSITIVE
THP301	⚠ 1-803-615-21	s	THERMISTOR, POSITIVE
TP101	1-780-318-11	s	TERMINAL, LUG
TP102	1-780-318-11	s	TERMINAL, LUG
TP103	1-780-318-11	s	TERMINAL, LUG
TP104	1-780-318-11	s	TERMINAL, LUG
TP303	1-535-877-22	s	CHIP, CHECKER
TP304	1-535-877-22	s	CHIP, CHECKER
TP305	1-535-877-22	s	CHIP, CHECKER
X101	1-795-983-11	s	OSCILLATOR, CRYSTAL

RM-223 BOARD

Ref. No. or Q'ty	Part No.	SP	Description
1pc	A-1772-804-A	s	MOUNTED CIRCUIT BOARD, RM-223
C3000	1-114-582-91	o	CAP, CERAMIC 0.1MF B 1005
C3001	1-114-582-91	o	CAP, CERAMIC 0.1MF B 1005
C3002	1-114-582-91	o	CAP, CERAMIC 0.1MF B 1005
C3003	1-114-582-91	o	CAP, CERAMIC 0.1MF B 1005
C3004	1-114-582-91	o	CAP, CERAMIC 0.1MF B 1005
C3005	1-114-582-91	o	CAP, CERAMIC 0.1MF B 1005
C3006	1-100-672-91	s	CAP, CERAMIC 10MF C (3216)
C3007	1-164-854-81	s	CAP, CHIP CERAMIC 15PF CH 1005
C3009	1-114-582-91	o	CAP, CERAMIC 0.1MF B 1005
C3010	1-164-854-81	s	CAP, CHIP CERAMIC 15PF CH 1005
C3011	1-112-717-91	s	CAP, CERAMIC 1UF B (1005)
C3012	1-112-717-91	s	CAP, CERAMIC 1UF B (1005)
C3013	1-114-582-91	o	CAP, CERAMIC 0.1MF B 1005
C3014	1-112-717-91	s	CAP, CERAMIC 1UF B (1005)
C3015	1-112-717-91	s	CAP, CERAMIC 1UF B (1005)
C3016	1-164-874-81	s	CAP,CHIP CERAMIC 100PF CH 1005
C3017	1-164-874-81	s	CAP,CHIP CERAMIC 100PF CH 1005
C3018	1-100-672-91	s	CAP, CERAMIC 10MF C (3216)
C3019	1-112-746-11	s	CAP, CERAMIC 4.7MF B (1608)
C3020	1-112-692-81	s	CAP,CHIP CERAMIC1000PF CH 1005
C3021	1-114-582-91	o	CAP, CERAMIC 0.1MF B 1005
C3022	1-112-746-11	s	CAP, CERAMIC 4.7MF B (1608)
C3023	1-112-692-81	s	CAP,CHIP CERAMIC1000PF CH 1005
CN3000	1-815-411-21	o	CONNECTOR, BOARD TO BOARD 30P
D3000	6-502-197-01	s	DI SML-D12M8WT86SM
D3001	6-502-197-01	s	DI SML-D12M8WT86SM
D3002	6-502-197-01	s	DI SML-D12M8WT86SM
D3003	6-502-197-01	s	DI SML-D12M8WT86SM
IC3000	6-711-696-01	s	IC CY62256VNLL-70ZXCT
IC3001	6-710-944-01	s	IC TC74VHC573FK(EL,K)
IC3004	6-704-257-01	s	IC TK11130CSCL-G
R3000	1-208-935-81	s	RES, CHIP 100K (1005)
R3001	1-208-935-81	s	RES, CHIP 100K (1005)
R3002	1-218-990-81	s	CONDUCTOR, CHIP (1005)
R3003	1-218-990-81	s	CONDUCTOR, CHIP (1005)
R3004	1-208-903-81	s	RES, CHIP 4.7K (1005)
R3005	1-208-903-81	s	RES, CHIP 4.7K (1005)
R3006	1-218-990-81	s	CONDUCTOR, CHIP (1005)
R3008	1-218-990-81	s	CONDUCTOR, CHIP (1005)
R3009	1-218-990-81	s	CONDUCTOR, CHIP (1005)
R3010	1-218-990-81	s	CONDUCTOR, CHIP (1005)
R3011	1-208-911-81	s	RES, CHIP 10K (1005)
R3012	1-208-935-81	s	RES, CHIP 100K (1005)
R3013	1-218-990-81	s	CONDUCTOR, CHIP (1005)
R3014	1-208-911-81	s	RES, CHIP 10K (1005)
X3000	1-813-177-21	s	VIBRATOR, CRYSTAL (16 MHz)

2-4. Supplied Accessories

PACKING MATERIALS & SUPPLIED ACCESSORIES

Ref. No. or Q'ty	Part No.	SP	Description
1pc	X-2547-887-1	s	WIRE, ROPE ASSY
1pc	⚠ 1-480-351-61	s	ADAPTOR, AC (AC-NB12A)
1pc	⚠ 1-575-131-82	s	CORD, POWER (FOR EUROPE)
1pc	⚠ 1-757-562-11	s	CORD, POWER (FOR NORTH AMERICA)
1pc	⚠ 1-834-600-11	s	CORD SET, POWER (FOR JAPAN)
1pc	2-100-951-04	s	ADAPTER, SCREW, STAND, SAD-34
1pc	2-100-952-02	s	ADAPTER, SCREW, STAND (SAD-35)
1pc	3-692-186-01	s	HOLDER,CABLE
1pc	⚠ 4-177-132-01	s	MANUAL,INSTRUCTION
1pc	4-182-209-01	s	BRACKET (A)
1pc	4-182-210-01	s	BRACKET (B)
1pc	4-185-853-01	s	CD-ROM (INSTRUCTION MANUAL)
1pc	4-186-123-01	s	WIRE , ROPE
2pcs	7-682-547-09	s	SCREW +B 3X6

Section 3
Block Diagrams

3-1. Overall Block Diagrams

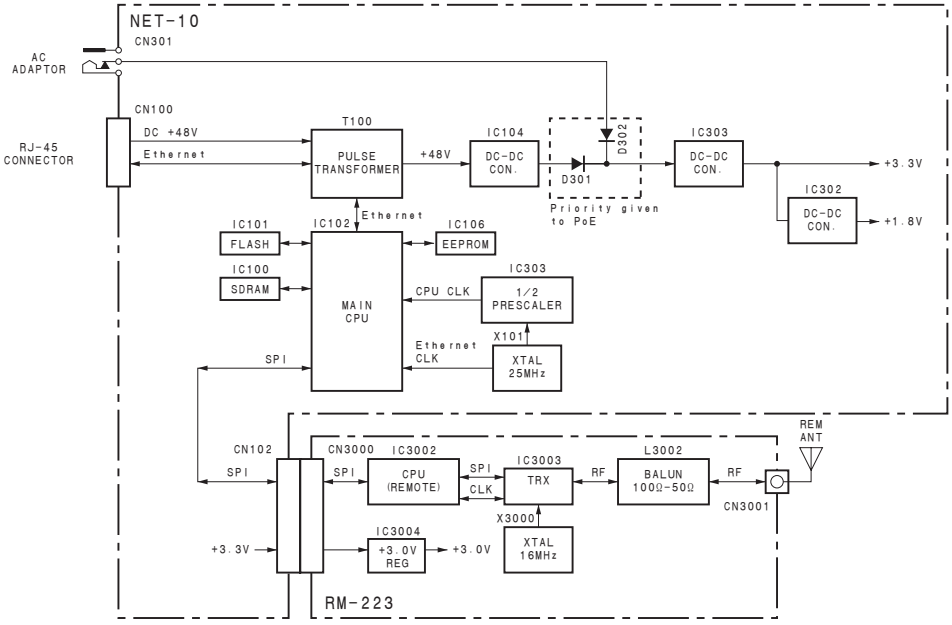

3-2. Circuit Description

1. NET-10 Board

The NET-10 board, main board of the unit, performs Ethernet communication and controls the RM-223 board by the main CPU (IC102).
The flash ROM (IC101) contains firmware.
The SDRAM (IC100) is used as the work memory of the main CPU (IC102).
The power supply circuit generates a power voltage from the 12 V from the AC adapter or the 48 V from the PoE (Power Over Ethernet) power device using the DC jack (CN301) or the LAN connector (CN100). If these voltages are supplied simultaneously, the 48 V from the PoE is selected preferentially for power supply. The DC-DC converter mainly consisting of IC104, Q100, and T101 converts the PoE voltage to +13 V.
The power voltage supplied from the DC jack (CN301) or the LAN connector (CN100) is rectified by the diodes (D301, D302), and the rectified voltage is converted to +3.3 V and +1.8 V by the DC-DC converter (IC302, IC303). The generated voltage is supplied to the main CPU (IC102), SD RAM (IC100), flash ROM (IC101), RM-223 board, and other circuits.

2. RM-223 Board

The RM-223 board performs remote control as a function of the unit.
The CPU (IC3002) on this board controls communication between the transceiver (IC3003) on this board and the main CPU (IC102) on the NET-10 board.
The transceiver (IC3003) modulates and demodulates RF signals and performs communication.
The power supply circuit regulates the +3.3 V supplied from the NET-10 board with the +3.0 V regulator (IC3004), and supplies the regulated voltage to ICs on this board.

Section 4
Schematic Diagrams

Index

Board name	Page
NET-01	4-2
RM-223	4-4

4-1

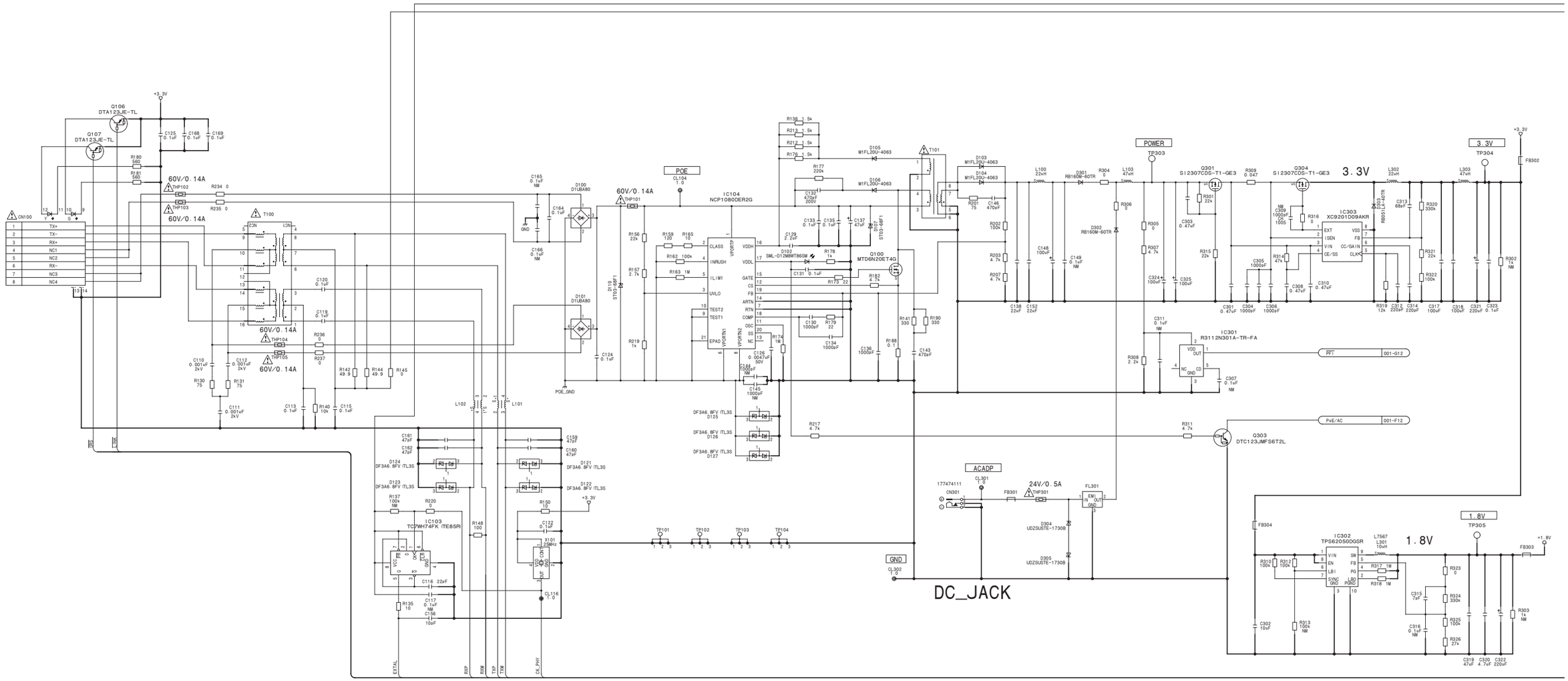
1
2
3
4
5
POE
POWER
3.3V
ACADP
DC_JACK
1.8V
24V/0.5A
60V/0.14A
IC104
NCP1080DER2G
IC303
XC9201D09AKR
IC301
R3112N301A-TR-FA
IC302
TPS62050DGSR
IC103
TC7WH74FK (TE85R)
Q100
MTD6N20ET4G
Q301
SI2307CDS-T1-GE3
Q304
SI2307CDS-T1-GE3
Q303
DTC123JMF56T2L
Q106
DTA123JE-TL
Q107
DTA123JE-TL
CN100
CN301
T100
T101
PFT
PoE/AC

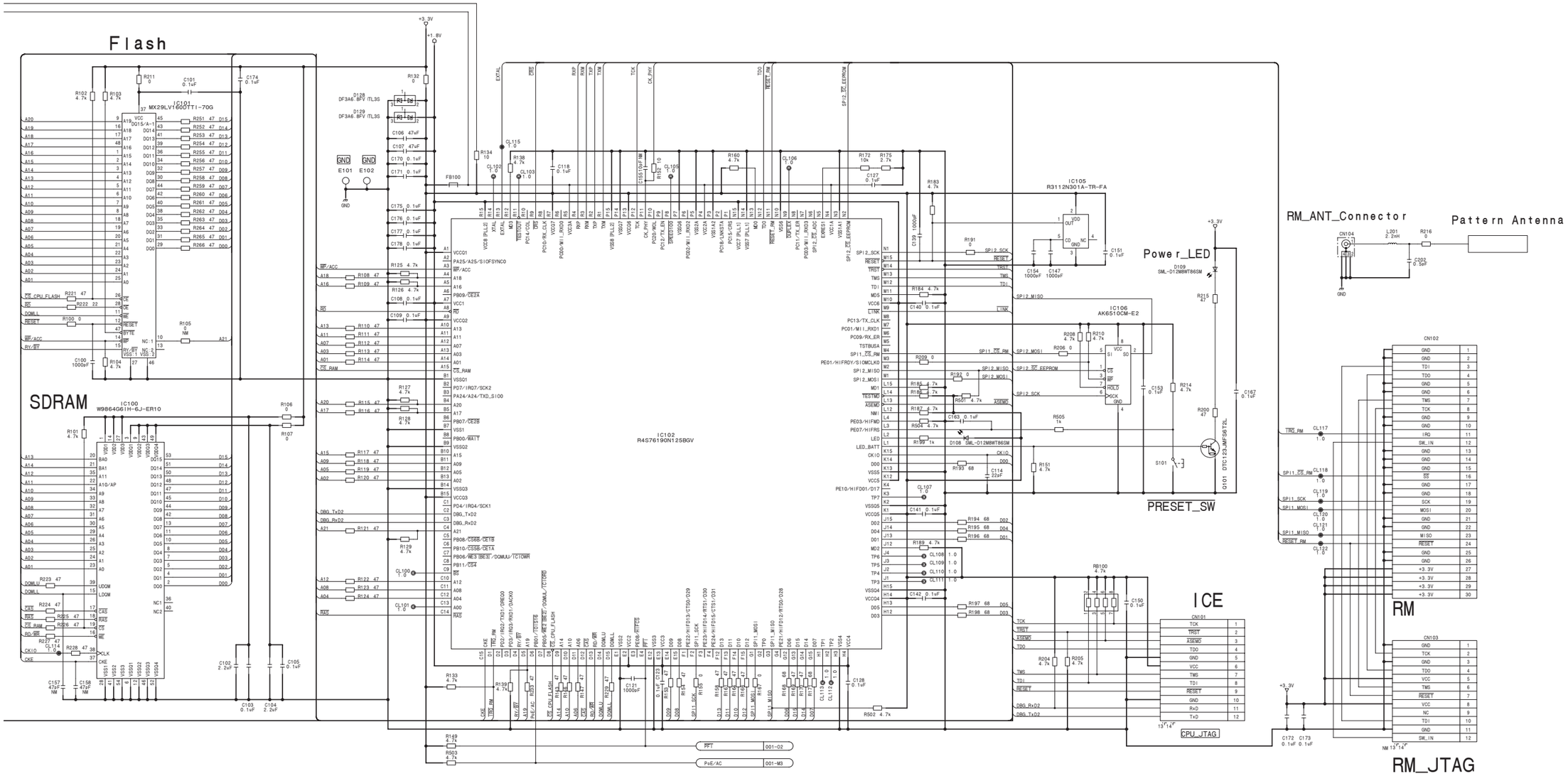

NET-10
BOARD NO. 1-882-057-11
MAX-782_NET-10_022.cir/001

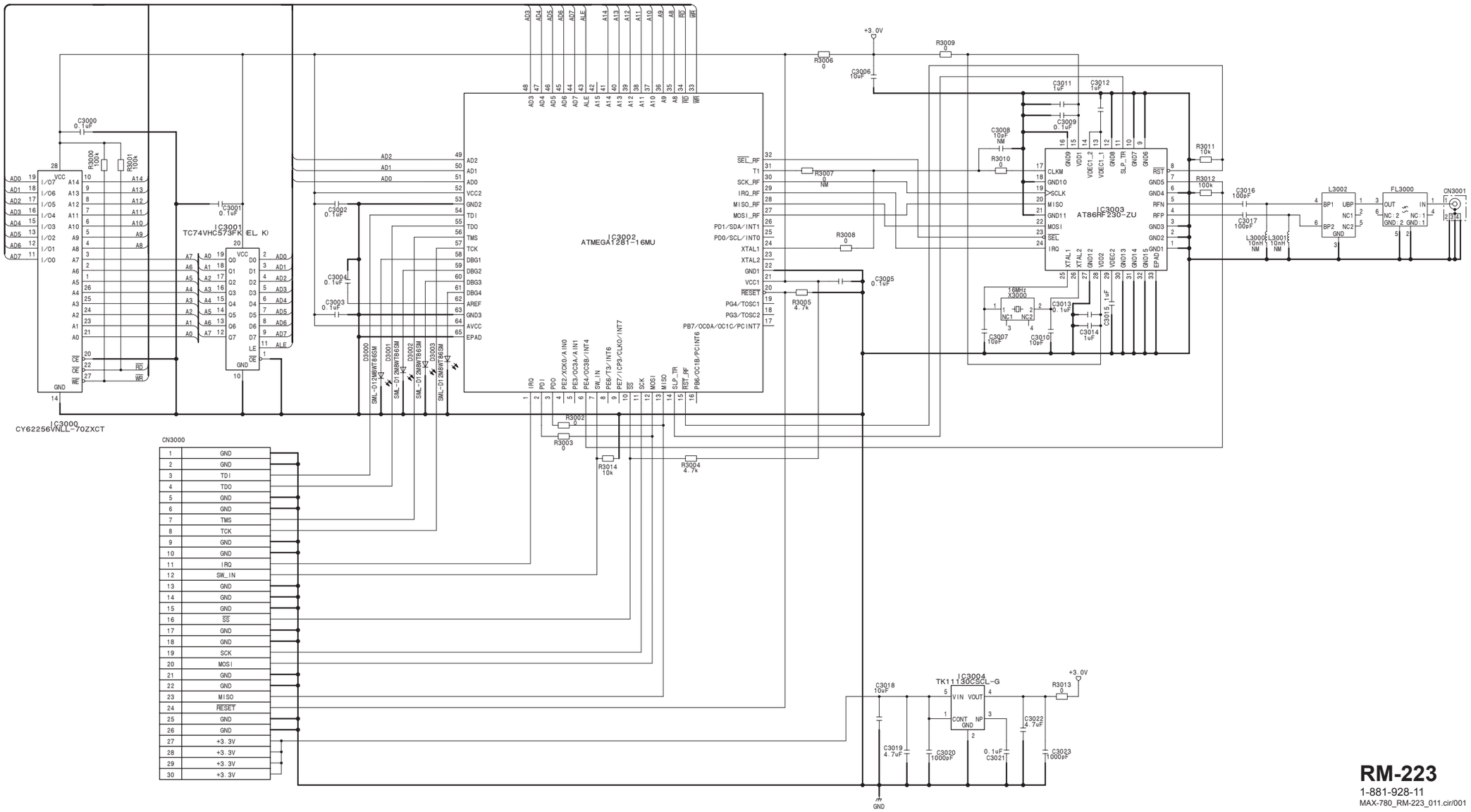

RM-223
1-881-928-11
MAX-780_RM-223_011.cir/001

Section 5
Board Layouts

Index

Board name	Page
NET-10	5-2
RM-223	5-3

5-1

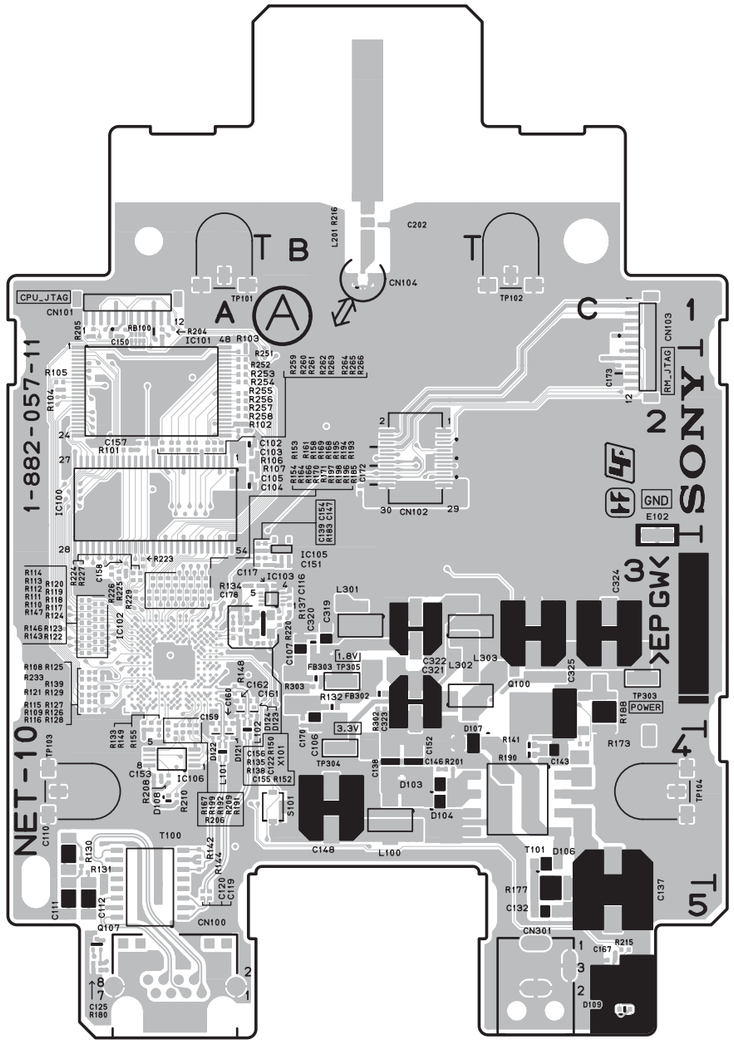

NET-10 -A SIDE-

SUFFIX: -11

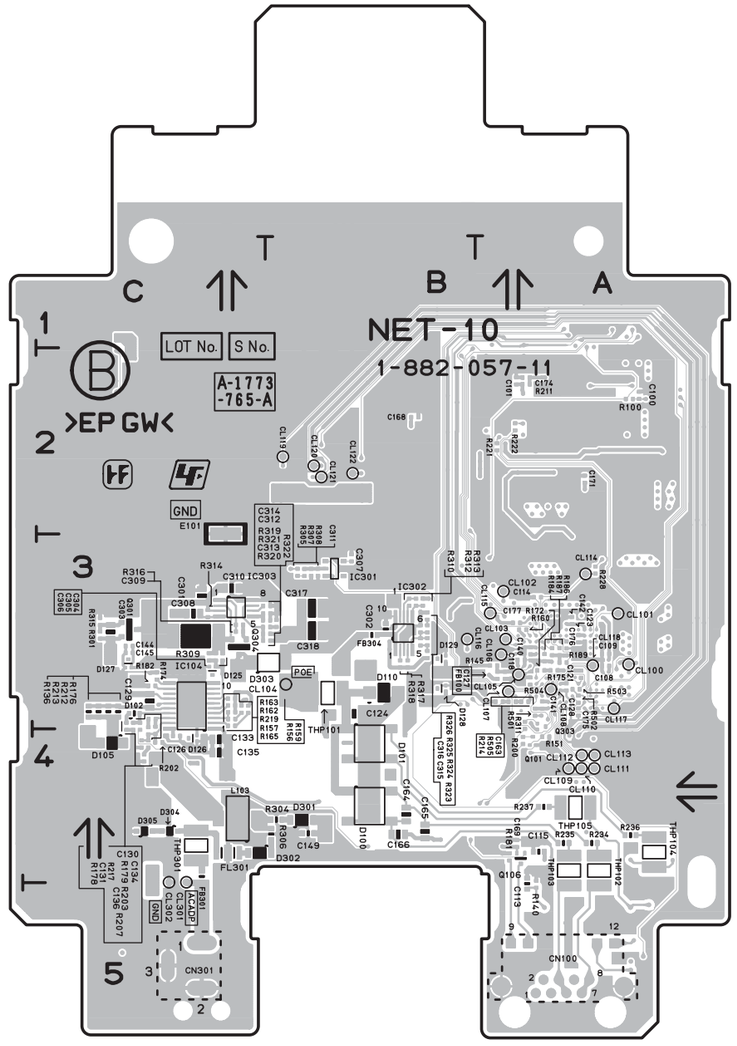

NET-10 -B SIDE-

SUFFIX: -11

NET-10 (1-882-057-11)
---
*:B SIDE

C100	*A2	C127	*A3	C154	A3	C302	*B3	CL102	*A3	CN103	C1	D304	*C4	L102	A4	R112	A3	R139	A3	R166	A3	R193	A3	R221	*A2	R264	A2	R325	*B3	TP304	B4
C101	*A2	C128	*A3	C155	A3	C303	*C3	CL103	*A3	CN104	B1	D305	*C4	L103	*C4	R113	A3	R140	*A5	R167	A3	R194	A3	R222	*A2	R265	A2	R326	*B3	TP305	B3
C102	A2	C129	*C3	C156	A3	C304	*C3	CL104	*B3	CN301	C5			L201	B1	R114	A3	R141	C4	R168	A3	R195	A3	R223	A3	R266	A2	R501	*A3		
C103	A2	C130	*C3	C157	A2	C305	*C3	CL105	*A3			E101	*C2	L301	B3	R115	A3	R142	A4	R169	A3	R196	A3	R224	A3	R301	*C3	R502	*A3	X101	B3
C104	A2	C131	*C3	C158	A3	C306	*C3	CL106	*A3	D100	*B4	E102	C3	L302	B3	R116	A3	R143	A3	R170	A3	R197	A3	R225	A3	R302	B3	R503	*A3		
C105	A2	C132	C5	C159	A3	C307	*B3	CL107	*A3	D101	*B4			L303	B3	R117	A3	R144	A4	R171	A3	R198	A3	R226	A3	R303	B3	R504	*A3		
C106	B3	C133	*C4	C160	A3	C308	*C3	CL108	*A3	D102	*C3	FB100	*A3			R118	A3	R145	*A3	R172	*A3	R199	A4	R227	A3	R304	*B4	R505	*A3		
C107	B3	C134	*C4	C161	A3	C309	*C3	CL109	*A4	D103	B4	FB301	*C4	Q100	C3	R119	A3	R146	A3	R173	C4	R200	*A4	R228	*A3	R305	*B3				
C108	*A3	C135	*C4	C162	A3	C310	*C3	CL110	*A4	D104	B4	FB302	B3	Q101	*A4	R120	A3	R147	A3	R174	*C3	R201	B4	R229	A3	R306	*B4	RB100	A1		
C109	*A3	C136	*C4	C163	*A3	C311	*B3	CL111	*A4	D105	*C4	FB303	B3	Q106	*A4	R121	A3	R148	A3	R175	*A3	R202	*C4	R233	A3	R307	*B3				
C110	A4	C137	C5	C164	*B4	C312	*B3	CL112	*A4	D106	C4	FB304	*B3	Q107	A5	R122	A3	R149	A3	R176	*C3	R203	*C4	R234	*A4	R308	*B3	S101	B4		
C111	A5	C138	B4	C165	*B4	C313	*B3	CL113	*A4	D107	C4			Q301	*C3	R123	A3	R150	A3	R177	C5	R204	A1	R235	*A4	R309	*C3				
C112	A5	C139	A3	C166	*B4	C314	*B3	CL114	*A3	D108	A4	FL301	*C4	Q303	*A3	R124	A3	R151	*A4	R178	*C3	R205	A1	R236	*A4	R310	*B3	T100	A5		
C113	*A5	C140	*A3	C167	C5	C315	*B3	CL115	*A3	D109	C5			Q304	*C3	R125	A3	R152	B3	R179	*C4	R206	A4	R237	*A4	R311	*A3	T101	C4		
C114	*A3	C141	*A3	C168	*B2	C316	*B3	CL116	*B3	D110	*B3	IC100	A2			R126	A3	R153	A3	R180	A5	R207	*C4	R251	A2	R312	*B3				
C115	*A4	C142	*A3	C169	*A4	C317	*B3	CL117	*A3	D121	A4	IC101	A2	R100	*A2	R127	A3	R154	A3	R181	*A4	R208	A4	R252	A2	R313	*B3	THP101	*B3		
C116	B3	C143	C4	C170	B3	C318	*B3	CL118	*A3	D122	A4	IC102	A3	R101	A2	R128	A3	R155	A3	R182	*C3	R209	A4	R253	A2	R314	*C3	THP102	*A4		
C117	B3	C144	*C3	C171	*A2	C319	B3	CL119	*B2	D123	A3	IC103	B3	R102	A2	R129	A3	R156	*C3	R183	B3	R210	A4	R254	A2	R315	*C3	THP103	*A4		
C118	*A3	C145	*C3	C172	B2	C320	B3	CL120	*B2	D124	A3	IC104	*C3	R103	A2	R130	A4	R157	*C3	R184	*A3	R211	*A2	R255	A2	R316	*C3	THP104	*A4		
C119	A5	C146	B4	C173	C2	C321	B3	CL121	*B2	D125	*C3	IC105	B3	R104	A2	R131	A4	R158	A3	R185	A3	R212	*C3	R256	A2	R317	*B3	THP105	*A4		
C120	A5	C147	B3	C174	*A2	C322	B3	CL122	*B2	D126	*C4	IC106	A4	R105	A2	R132	B3	R159	*C3	R186	*A3	R213	*C3	R257	A2	R318	*B3	THP301	*C4		
C121	*A3	C148	B4	C175	*A3	C323	B3	CL301	*C4	D127	*C3	IC301	*B3	R106	A2	R133	A3	R160	*A3	R187	*A3	R214	*A3	R258	A2	R319	*B3				
C122	A3	C149	*B4	C176	*A3	C324	C3	CL302	*C4	D128	*B3	IC302	*B3	R107	A2	R134	A3	R161	A3	R188	C3	R215	C5	R259	A2	R320	*B3	TP101	A1		
C123	*A3	C150	A1	C177	*A3	C325	C3			D129	*B3	IC303	*C3	R108	A3	R135	A3	R162	*C3	R189	*A3	R216	B1	R260	A2	R321	*B3	TP102	C1		
C124	*B3	C151	B3	C178	A3			CN100	A5	D301	*B4			R109	A3	R136	*C3	R163	*C3	R190	C4	R217	*C3	R261	A2	R322	*B3	TP103	A4		
C125	A5	C152	B4	C202	B1	CL100	*A3	CN101	A1	D302	*C4	L100	B4	R110	A3	R137	B3	R164	A3	R191	A4	R219	*C3	R262	A2	R323	*B3	TP104	C4		
C126	*C4	C153	A4	C301	*C3	CL101	*A3	CN102	B2	D303	*B3	L101	A4	R111	A3	R138	A3	R165	*C3	R192	A4	R220	B3	R263	A2	R324	*B3	TP303	C3		

```
---------------------
RM-223 (1-881-928-11)
---------------------
*:B SIDE

C3000  *A2
C3001   B2
C3002   B2
C3003   B1
C3004   B1
C3005   A1
C3006   A1
C3007   A2
C3008   A2
C3009   A2
C3010   A2
C3011   A2
C3012   A2
C3013   A2
C3014   A2
C3015   A1
C3016   A1
C3017   A1
C3018  *A1
C3019  *A1
C3020  *A1
C3021   A1
C3022   A1
C3023   A1

CN3000 *A1
CN3001  A1

D3000   B1
D3001   B1
D3002   B1
D3003   B1

FL3000  A1

IC3000 *B2
IC3001  B2
IC3002  B1
IC3003  A1
IC3004  A1

L3000   A1
L3001   A1
L3002   A1

R3000  *A2
R3001  *A2
R3002   B1
R3003   B1
R3004   B1
R3005   A1
R3006   A1
R3007   A2
R3008   A1
R3009   A1
R3010   A2
R3011   A1
R3012   A1
R3013   A1
R3014   B1

X3000   A2
```

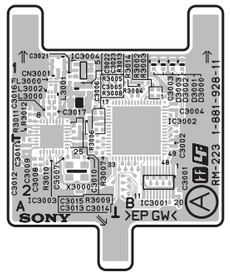

RM-223 -A SIDE-
SUFFIX: -11

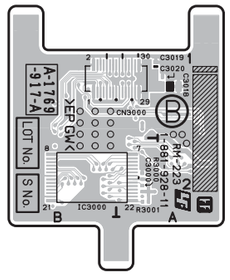

RM-223 -B SIDE-
SUFFIX: -11

RMU-01 (SY) J, E
9-968-749-02

Sony Corporation

Printed in Japan
2010. 6 08
©2010