http://www.xiaoyu163.com

PT-D3

AEP Model
UK Model
E Model

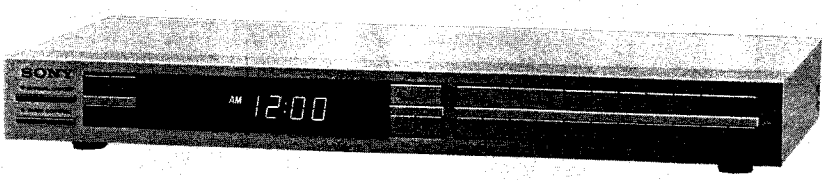

PROGRAM TIMER

SPECIFICATIONS

Power requirements	AEP model: 220 V ac, 50 Hz UK model: 240 V ac, 50 Hz E model: 110 – 130 or 220 – 240 V ac adjustable, 50 or 60 Hz adjustable
Power consumption	5 W
Control time	24-hour cycle
Timer setting	Up to eight on/off operations with an accuracy measured in minutes
Clock	Synchronized with power line frequency
Time accuracy	Less than +0.02 sec. per day excluding time error from fluctuations in power line frequency
AC outlet	One switched, one unswitched total 400 W for AEP model total 500 W for UK, E model
Dimensions	Approx. 430 x 55 x 190 mm (w/h/d) (17 x 2 1/4 x 7 3/4 inches) including projecting parts and controls for AEP model Approx. 430 x 55 x 185 mm (w/h/d) (17 x 2 1/4 x 7 3/8 inches) including projecting parts and controls for UK, E model
Weight	Approx. 2.4 kg (5 lbs 5 oz) net

SAFETY-RELATED COMPONENT WARNING!!

COMPONENTS IDENTIFIED BY SHADING AND MARK ⚠ ON THE SCHEMATIC DIAGRAMS, EXPLODED VIEWS AND IN THE PARTS LIST ARE CRITICAL TO SAFE OPERATION. REPLACE THESE COMPONENTS WITH SONY PARTS WHOSE PART NUMBERS APPEAR AS SHOWN IN THIS MANUAL OR IN SUPPLEMENTS PUBLISHED BY SONY.

MICROFILM

SONY®
SERVICE MANUAL

http://www.xiaoyu163.com

http://www.xiaoyu163.com

SECTION 1
OUTLINE

LOCATION AND FUNCTION OF CONTROLS

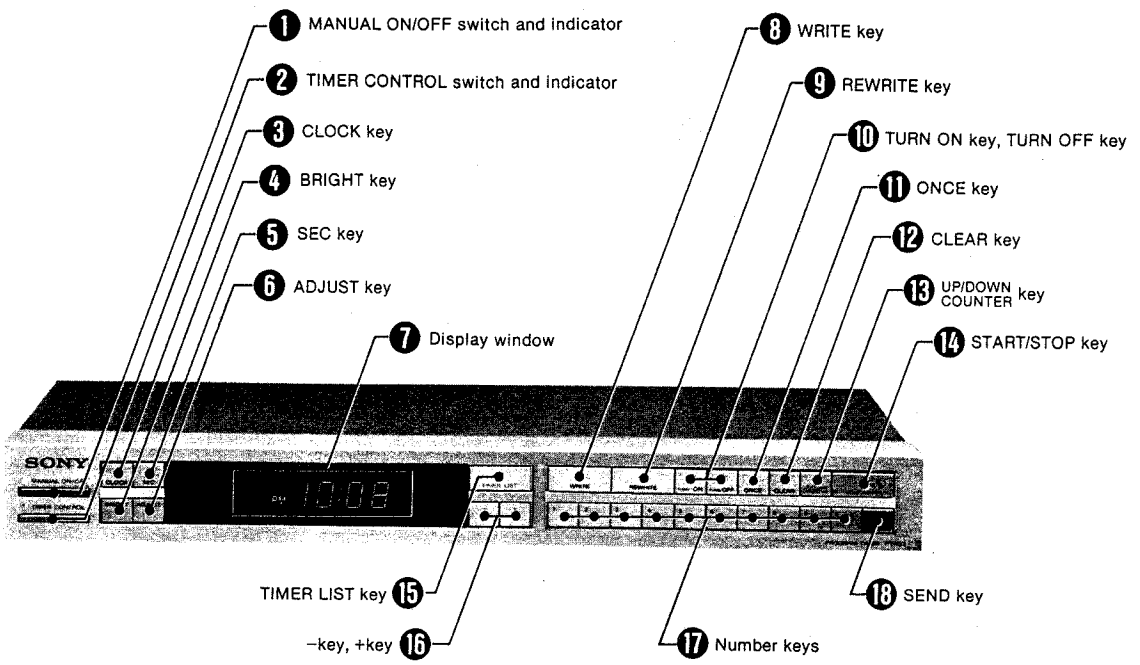

1 MANUAL ON/OFF switch and indicator
Depress this switch to turn the power on or off to connected appliances without using the timer function. This switch operates regardless of the timer setting. The power indicator lights up when power is supplied to the connected appliances.

2 TIMER CONTROL switch and indicator
Depress this switch to control the power to connected appliances by using the timer. The indicator lights up when the timer control function is in operation. This does not light up when there is no program set in the timer. Depress the switch again to turn off the timer control function. The timer indicator will then go off.

3 CLOCK key
Depress this key to return the present time display from the other display.

4 BRIGHT key
Depress this key to dim the indications in the display window. Press again to brighten.

5 SEC key
Depress this key to display the present time down to the exact second. The last digit of the minute will be indicated on the left and a double-digit second time will be displayed on the right.

6 ADJUST key
Use this key to adjust the clock setting.

7 Display window
On clock display:

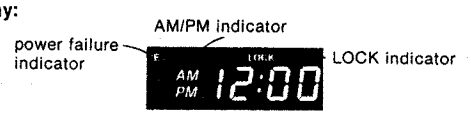

On timer display:

8 WRITE key
Depress this key to set the timer program.

9 REWRITE key
Depress this key to change the timer program.

10 TURN ON key, TURN OFF key
Depress the TURN ON key to set the turn-on time of the timer and depress the TURN OFF key to set the turn-off time, after pressing the WRITE key.

11 ONCE key
Depress this key if the timer setting is to be used only once.

http://www.xiaoyu163.com

http://www.xiaoyu163.com

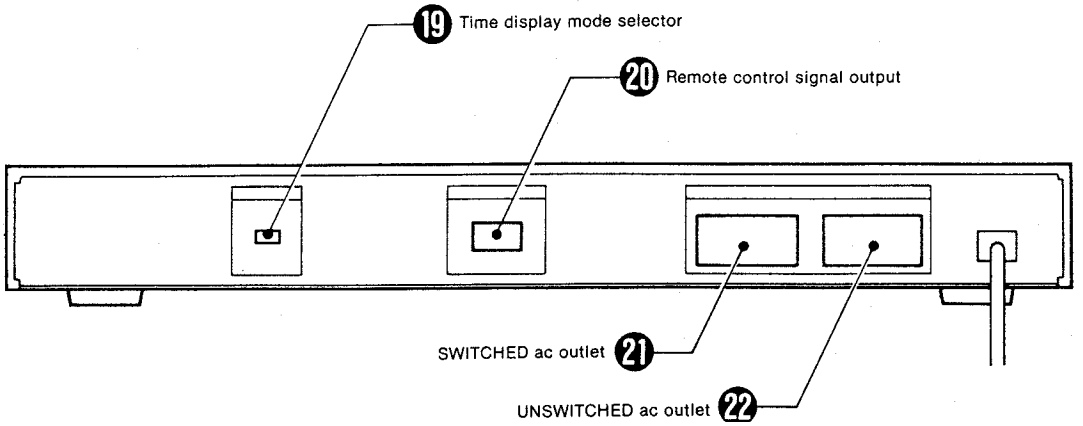

⑫ CLEAR key
Depress this key to cancel the timer setting.

⑬ UP/DOWN COUNTER key
Depress this key to use the timer as a time counter.

⑭ START/STOP key
Depress this key to start the count. Depress again to stop counting. Press again to resume the count.

⑮ TIMER LIST key
Depress this key to display the timer program. The setting nearest after the present time will be displayed.

⑯ −(List down) key, +(List up) key
After the TIMER LIST key has been depressed and a timer program displayed, depress the [+] key to display the next timer program or the [−] key to display the previous timer program. When either of these keys are pressed again, the next (or previous) timer program on the list will be displayed. If either key is kept depressed, the list will be displayed in sequence.

⑰ Number keys
Use these keys to set the clock and the timer programs.

⑱ SEND key
Depress this key to start the clock operating after the correct time and day has been set, and to memorize the timer programs.

⑲ Time display mode selector
Set this selector to the desired mode of time display: 12-hour system or 24-hour system.

⑳ Remote control signal output
The output for connecting the RM-S5 system remote controller.

㉑ SWITCHED ac outlet
This outlet provides ac power and is controlled by the MANUAL ON/OFF switch or the timer.

㉒ UNSWITCHED ac outlet
This outlet supplies ac power which is not controlled by the MANUAL ON/OFF switch or the timer. It can be used as an ac outlet when the power cord of the timer is connected to a wall outlet.

http://www.xiaoyu163.com

http://www.xiaoyu163.com

HOW TO SET THE CLOCK

Setting the clock
Connect the power cord to a wall outlet.

The "E" (Power failure indicator) lights up and the clock will start operating from 12:00 AM (with 12-hour system) or 0:00 (with 24-hour system).

To set the clock to 8:30 AM, for example, proceed as follows.

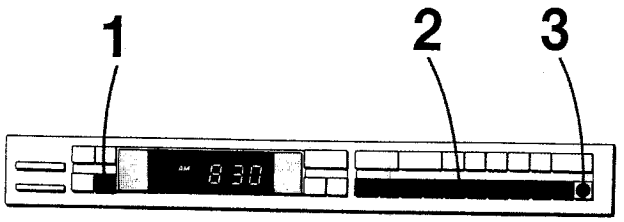

1 Depress the ADJUST key.

blinks

The hyphen [–] indicates the position where a number should be entered next.

2 Set the numbers to [–] with the number key in the order of 0, 8, 3, 0.

blinks

Notice: Time should be set by the 24-hour system, even though you wish the time to be displayed by the 12-hour system.

When setting the clock to any time between midnight and 9:00 AM, remember to enter "0" as the tens digit.
For a minute setting anywhere between "0" and "9" minutes, also remember to enter "0" as the tens digit.

3 As soon as you hear the time signal on the telephone, radio or TV, depress the SEND key.

With 12-hour system

With 24-hour system

Quick reference of 12-hour and 24-hour systems

12-hour system	AM 12:00	AM 1:00	...	AM 10:00	AM 11:00	PM 12:00	PM 1:00	PM 2:00	PM 3:00
24-hour system	0:00	1:00	...	10:00	11:00	12:00	13:00	14:00	15:00

12-hour system	PM 4:00	PM 5:00	PM 6:00	PM 7:00	PM 8:00	PM 9:00	PM 10:00	PM 11:00	AM 12:00
24-hour system	16:00	17:00	18:00	19:00	20:00	21:00	22:00	23:00	0:00

To display the time in seconds
Depress the SEC key.

For example, when the SEC key is depressed at 17:25 and 24 seconds, the display will be as follows:

minutes seconds

To return the display to the normal mode, depress the CLOCK key.

What to do if:
—You press the wrong number key while setting the clock.
Depress the ADJUST key and start again from Step 1.

—Nothing is displayed when you press a number key.
- Make sure that you pressed "0" before the hour key when setting a time from 1:00 AM to 9:00 AM.
- Make sure that you pressed "0" before the minutes key when setting 9 minutes or less.
- Make sure that you set it using the 24-hour system after 13:00.

http://www.xiaoyu163.com

http://www.xiaoyu163.com

HOW TO SET A TIMER PROGRAM

Timer setting procedure

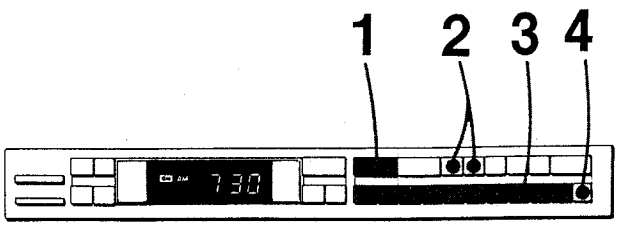

1 Depress the WRITE key.

This number indicates how many programs can be set.

2 Depress the TURN ON key or TURN OFF key to select the ON time setting or OFF time setting.

3 Set the time with the same process as the clock adjustment.

4 Depress the SEND key.

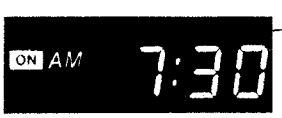

A blinking colon indicates that the timer program is displayed.

One of the timer program is now set.
Up to 8 programs (including both TURN ON, TURN OFF) can be programmed by repeating the above 1 to 4 steps. You can set the program in a random order. The microcomputer of the timer sets the program in the right order. When the WRITE key is depressed with 8 programs set, the letters "FULL" will be displayed.

To return the "FULL" display to the clock display, press the CLOCK key.
The display will return to the clock display automatically after a few minutes when the display is other than "FULL".

After setting all timer programs
When all timer programs have been set, depress the TIMER CONTROL switch to engage the timer control function. The appliances connected to the SWITCHED ac outlet on the rear will then be turned on and off by the timer.

If you do not want the timer to operate
Depress the TIMER CONTROL switch so that the indicator lamp goes out.

If you want the timer setting to operate only one time
Depress the ONCE key before pressing the SEND key (in step 4). "ONCE" will be displayed. The timer setting will be automatically cancelled after it has operated one time.

What to do if:
—You press the wrong number key when setting a timer program.
Depress the WRITE key and set again from the first step.

—The blinking of the display doesn't stop after pressing the SEND key.
Check that the ON, OFF (step 2) is set.

- How does it operate when the TURN ON and the TURN OFF time is set at the same time or overlapped?

TURN OFF program acts prior to TURN ON program. For example:

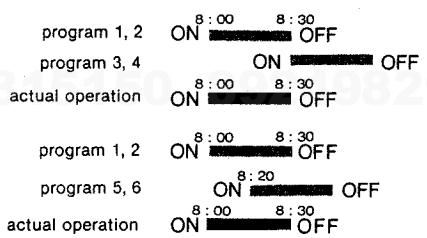

http://www.xiaoyu163.com

http://www.xiaoyu163.com

HOW TO LOCK IN ALL SETTINGS

After the timer programs have been set, you can lock them and all other settings in by depressing the number keys 0, 0 and 7 when the present time is displayed.
"LOCK" will be displayed and all settings will be locked so that they will not change even if the number keys are depressed. To release the lock, press the number keys 0, 0 and 7 when the present time is displayed.
When the timer programs are locked in, the CLOCK key, BRIGHT key, TIMER LIST key, [+] key and [−] key will still operate.

What to do if:
—"LOCK" is not displayed when you press 0, 0, 7.
Set the display to the clock display.

HOW TO CHECK A TIMER PROGRAM

The timer's microcomputer will arrange the timer program chronologically, no matter what order you set them in.

For example:

Timer program set in this order		will be arranged this way.	
1	ON 7:00	①	ON 7:00
2	ON 11:00	②	OFF 8:00
3	OFF 11:30	③	ON 10:00
4	ON 10:00	④	OFF 10:30
5	OFF 10:30	⑤	ON 11:00
6	OFF 8:00	⑥	OFF 11:30

1 Depress the TIMER LIST key to display the next timer program.

If you depress the TIMER LIST key at 9:00, the display will be as follows.

This program is on No. ③.

2 Depress the [+] key to display the program one after another. Depress the [−] key to display the program in the reversed order.

The input program is

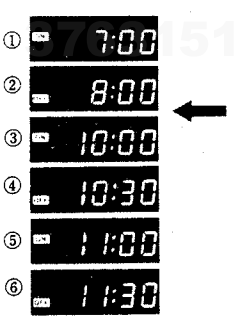

[----] display is shown between timer programs 2 and 3.

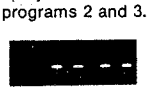

You can display the program either by depressing the [+] key and [−] key each time on each display or keep depressing to display the programs one after another automatically.

Display of the timer program will automatically change to the clock display in a few minutes.

http://www.xiaoyu163.com

http://www.xiaoyu163.com

HOW TO CHANGE A TIMER PROGRAM

Unlock the timer program settings if necessary for the program can't be changed when the timer is in the locked operation. To change the 11:00 PM ON setting to 11:15 PM OFF and limit the program to a one-time operation, proceed as follows.

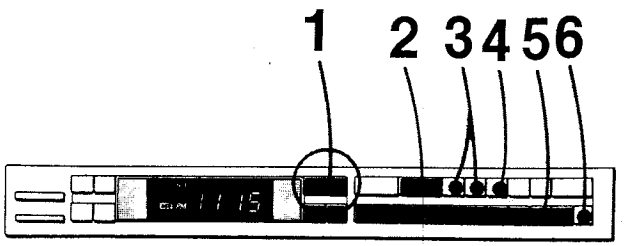

1 Depress the TIMER LIST key and the [+] key or [−] key to display the setting to be changed.

2 Depress the REWRITE key.

3 Depress the TURN OFF key.
(Skip this step if the ON or OFF setting is not to be changed.)

4 Depress the ONCE key.

5 Input the new setting.

NOTE: Input both hour and minute digits, even if only the minute digits are to be changed. In this example, depress 2, 3, 1 and 5.

6 Depress the SEND key.

HOW TO ERASE A TIMER PROGRAM

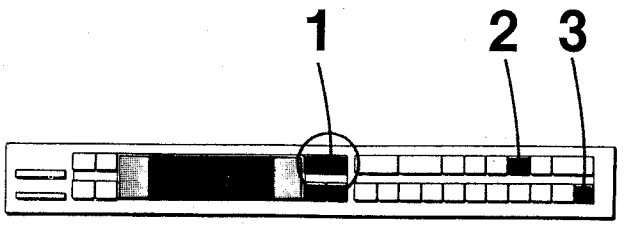

1 Display the timer setting you want to erase.

2 Depress the CLEAR key.

3 Depress the SEND key.
The setting will not be erased if the SEND key is not depressed after the CLEAR key is depressed.

http://www.xiaoyu163.com

http://www.xiaoyu163.com

EXAMPLES OF TIMER USE

Connect the appliance which you want to switch on and off using the timer to the SWITCHED ac outlet. Connect the appliance which is not to be used with the timer control to the UNSWITCHED ac outlet.

POWER SOURCE CONNECTION

The appliance connected to the SWITCHED outlet is switched on or off at the same time by the MANUAL ON/OFF switch or by the timer control function. Set the power switch of the appliance connected to the SWITCHED outlet to ON.

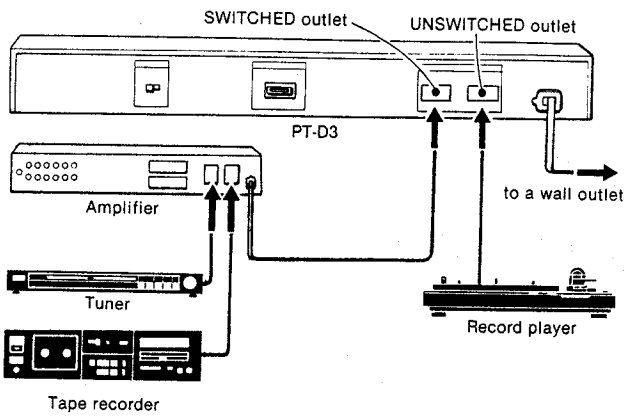

REMOTE-CONTROL CABLE CONNECTION

If you connect a Sony stereo system (for example, STR-S5L or STR-S5S receiver, PS-LX5 turntable and TC-FX6 tape deck etc.) to this timer as illustrated, you can control the whole system with an RM-S5 system remote controller and an RM-S5C remote commander.

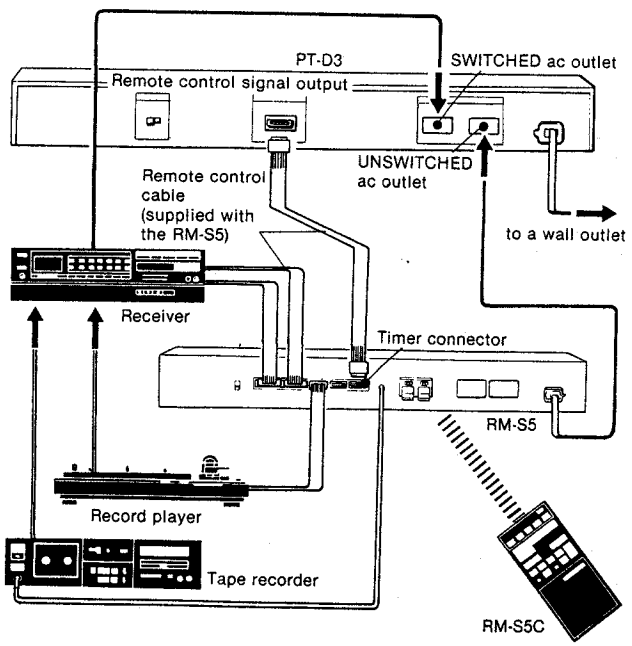

- Set the MANUAL ON/OFF switch of the timer to OFF.
- Set the power switch of the tuner, amplifier and tape recorder to ON.
- Set the MAIN POWER switch of the RM-S5 to ON.

Control signals from the remote commander in the form of infrared rays are received with the remote control detector provided on the remote controller. The signals delivered to the timer activate the MANUAL ON/OFF switch of the timer to turn on or turn off all components connected with the cords supplied with the remote controller.

Press the appropriate program selection button of the remote commander. All appliances connected to the timer will be turned on and the program will be selected.

Depress the POWER OFF button of the remote commander to turn off the connected appliances. The MANUAL ON/OFF switch of the timer will turn off.

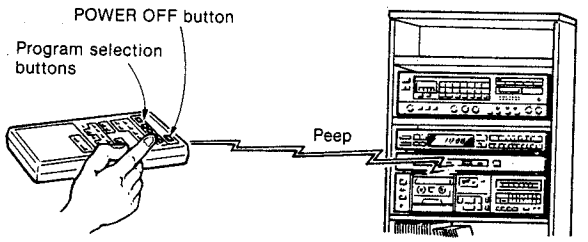

Turn off the MAIN POWER switch of the remote controller when the remote control system is not being used.

The power switches of the connected appliances are set to operate according to the MANUAL ON/OFF switch of the timer or the timer program.

—Does the remote controller operate when the timer is locked ("LOCK" indicator is displayed)?

- The power will not be supplied to the connected appliances and the remote controller does not operate when the timer is locked at MANUAL OFF.
- The power the connected appliances will not be cut off of while the remote controller operates when the timer is locked at MANUAL ON.

http://www.xiaoyu163.com

http://www.xiaoyu163.com

TIMER ACTIVATED RECORDING

A cassette deck to be used for timer-activated operation should be equipped with a timer-standby function.
Be sure to read the instruction manual of the cassette deck before proceeding with a timer-activated operation.

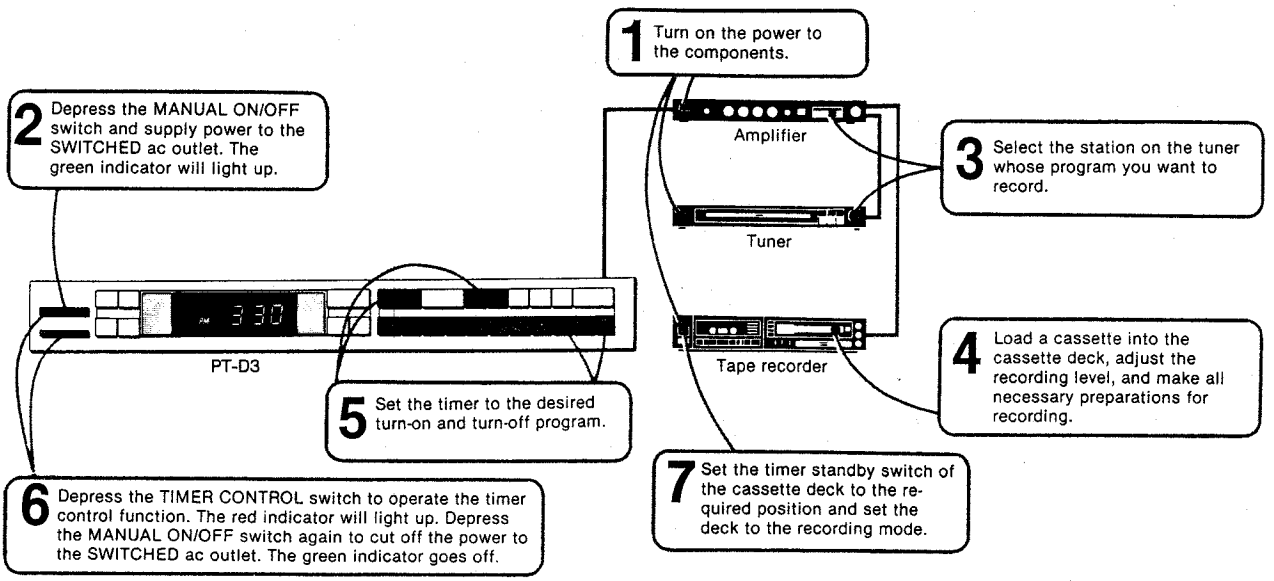

TO WAKE UP TO A RADIO PROGRAM

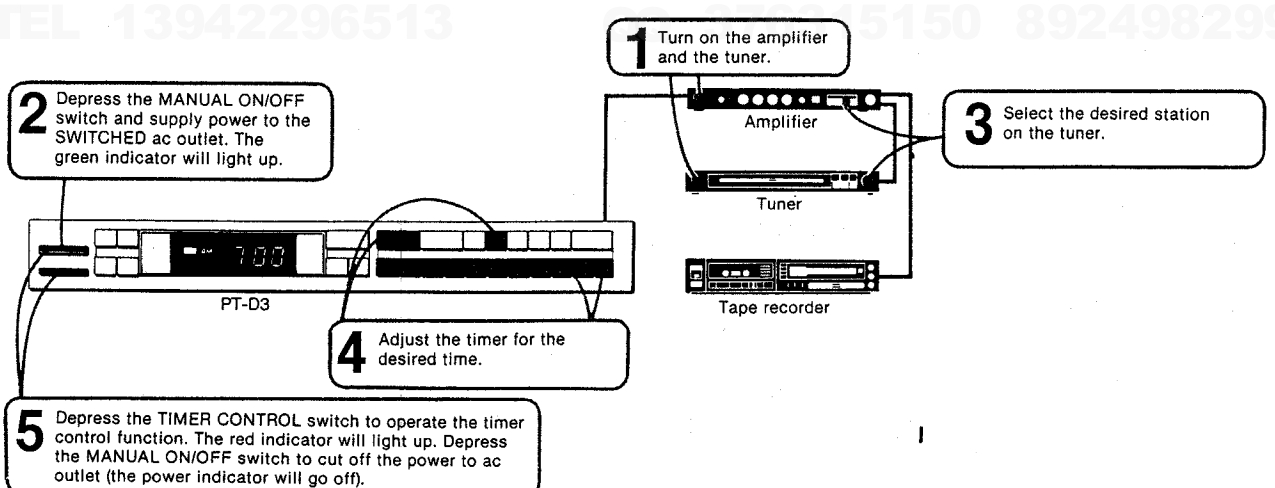

To wake up to a cassette tape program, set the tape deck to the playback mode on step 3.

http://www.xiaoyu163.com

http://www.xiaoyu163.com

HOW TO USE AS A TIME COUNTER

To count from 00 minute, 00 second, to 99 minutes, 59 seconds

1 Depress the UP/DOWN COUNTER key.

If the display is a blinking "99 59", depress the key once more.

2 Depress the START/STOP key. The count will start.

3 To stop the counter, depress the START/STOP key. To resume the count, depress the key once more.

To count the seconds down from a set time

1 Depress the UP/DOWN COUNTER key.

blinks

If the display is "00 00", depress the key once more.

2 Set the starting point of the count down. For example: to start the count down from 30 seconds,

depress the number key 0, 0, 3, 0 ⇨ depress the SEND key

3 Depress the START/STOP key to start the count down. The counter will stop at "00 00" after 30 seconds has passed. To stop counting or resume counting, depress the START/STOP key.

—Can the display be changed to the clock display or the timer display during counting?

- The clock display or the timer display will be indicated when depressing the CLOCK key or the TIMER LIST key, while counting continues. Depress the UP/DOWN COUNTER key to return the counter display.

http://www.xiaoyu163.com

http://www.xiaoyu163.com

TIMER DISPLAY CHART

The following chart explains everything which can appear in the time display window.

Display	Meaning	To display the present time
The colon lights up.		
	Clock display	
"LOCK" is displayed.	The time setting is locked. The clock setting and the timer program cannot be changed by depressing the ADJUST key or the WRITE key.	To release the lock, press the 0, 0, 7 number keys.
"E" blinks.	This indicates that there has been a power interruption.	Set the clock and the timer program again.
The hyphen blinks. 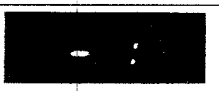	The present time is being set.	Set the present time.
The colon blinks.		
	The timer setting display	The display will return to the clock mode in a few minutes. To set the clock mode immediately, depress the CLOCK key.
Both "ON" and "OFF" blink.	The timer program is being set. Select either ON time or OFF time.	Depress the TURN ON or TURN OFF key and continue to set the timer setting.
The hyphen blinks.	The timer program is being set.	Continue to set the timer setting.
All of the display blinks.		
Only the colon blinks.	The timer setting has been erased.	The display will return to the clock mode in a few minutes. Depress the CLOCK key to display the clock mode immediately.
Both "ON" and "OFF" blink. 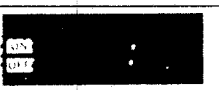	The timer setting is being erased. The CLEAR key has been depressed.	Depress the SEND key to finish erasing the timer setting.
The clock display blinks.	The clock setting is being set. Check the digits on the display.	Depress the SEND key to complete the clock setting.
The timer program display blinks.	The timer program is being set or the REWRITE key has been depressed.	Check the timer program and depress the SEND key. Rewrite the timer program and depress the SEND key.
Other displays		
	The unit minute and the seconds of the present time are displayed or count-up or count-down is in progress.	Depress the CLOCK key.
	The WRITE key has been depressed when no more timer programs can be set.	Rewrite the program to set the new timer setting. Depress the CLOCK key to return the clock mode.
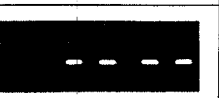	The TIMER LIST key has been depressed when no timer program has been set. This is the display which indicates where the present time would fall during the list up or list down of the timer programs.	The display will return to the clock mode in a few minutes. to return to the clock mode immediately, depress the CLOCK key.

http://www.xiaoyu163.com

http://www.xiaoyu163.com

SECTION 2
TROUBLE SHOOTING CHART

Troubleshooting

1. Power Supply Voltage Check

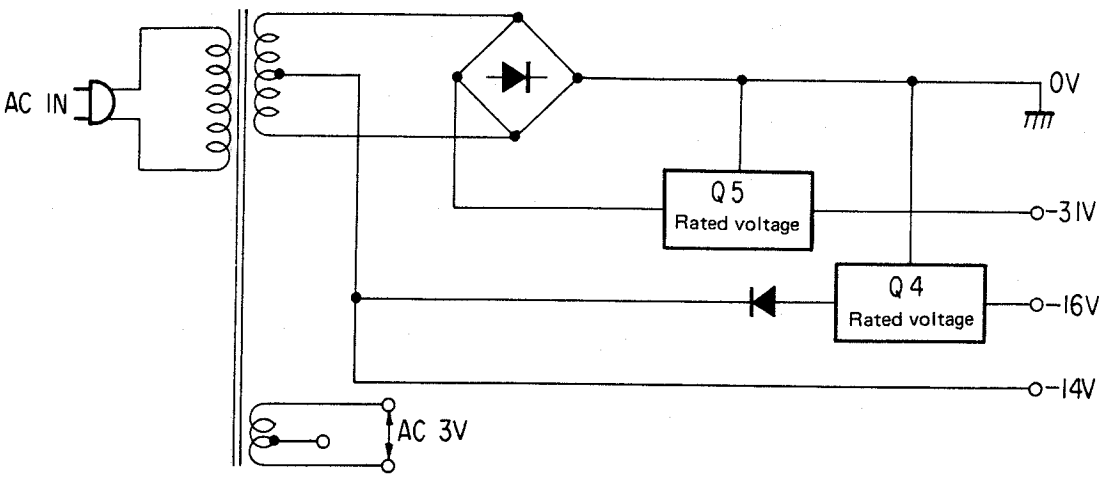

Note: The following checks should be performed only after checking power supply voltage.

2. Fluorescent display tube doesn't light up at all.

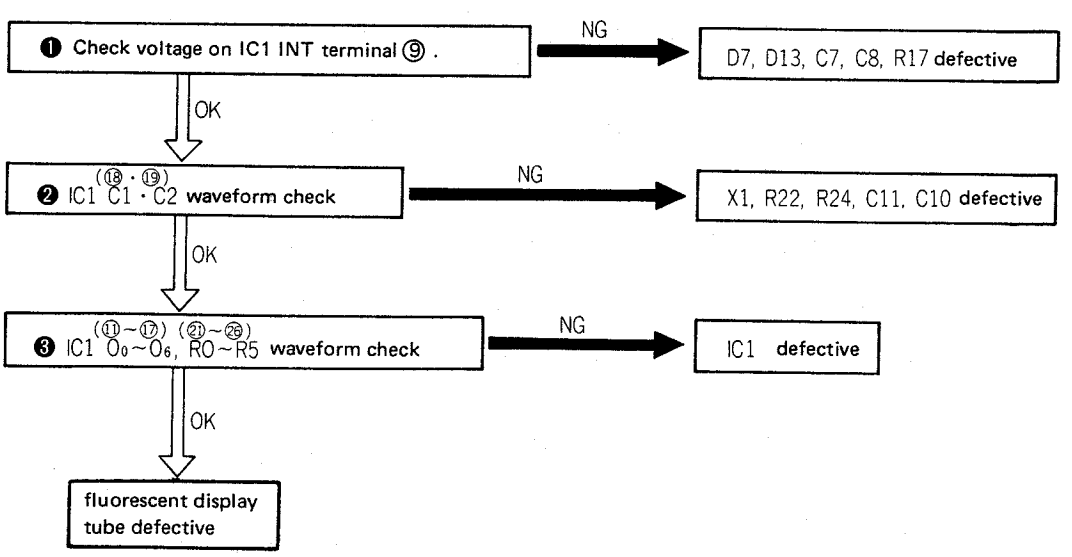

http://www.xiaoyu163.com

http://www.xiaoyu163.com

SECTION 3
BLOCK DIAGRAM

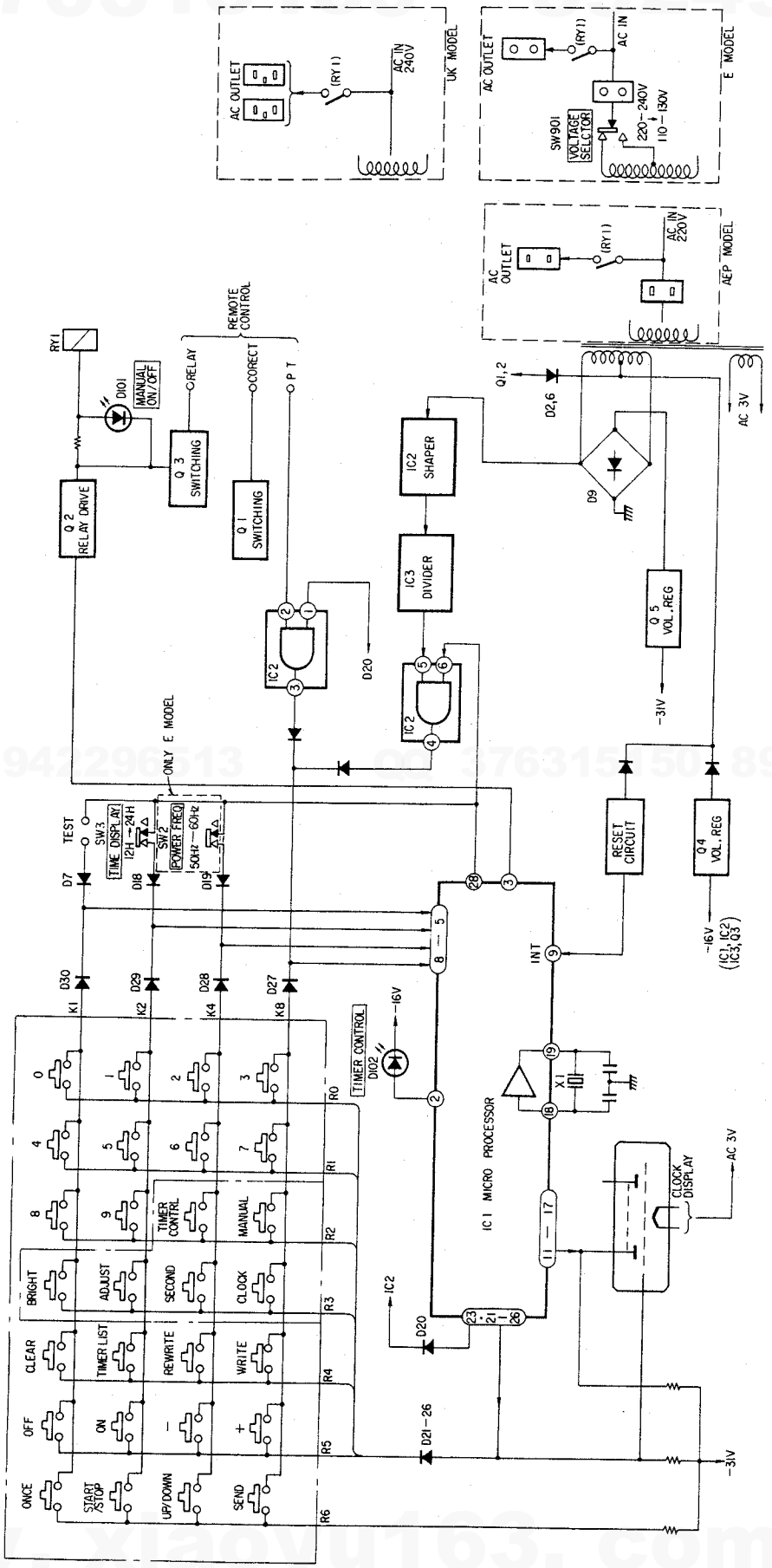

http://www.xiaoyu163.com

http://www.xiaoyu163.com

SECTION 4
DISASSEMBLY

CASE

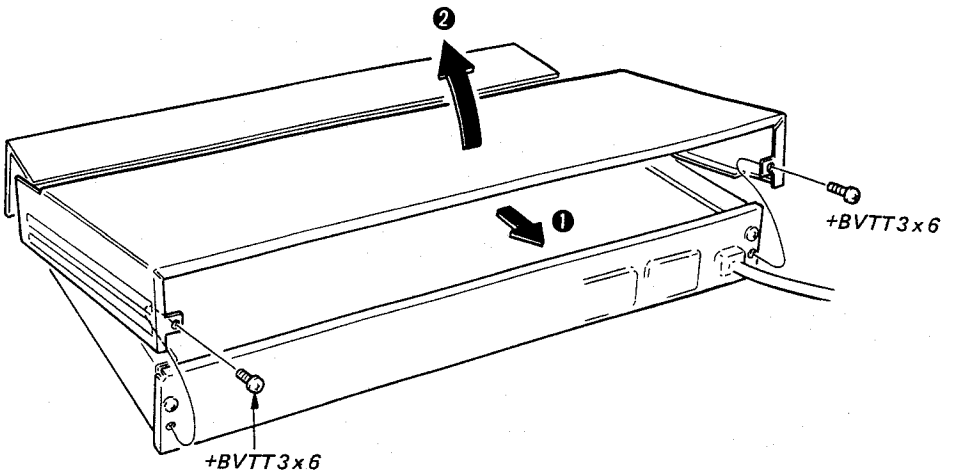

PANEL

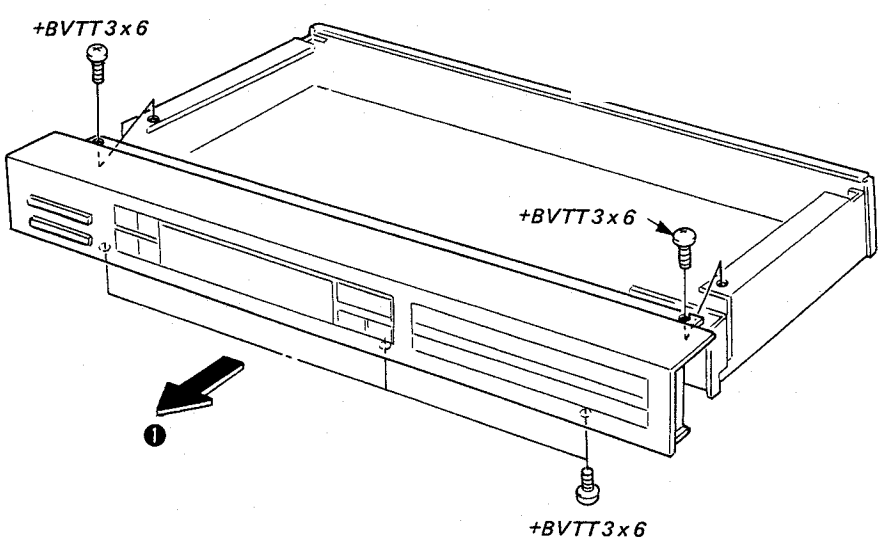

http://www.xiaoyu163.com

http://www.xiaoyu163.

SECTION 5
DIAGRAMS

5-1 MOUNTING DIAGRAM

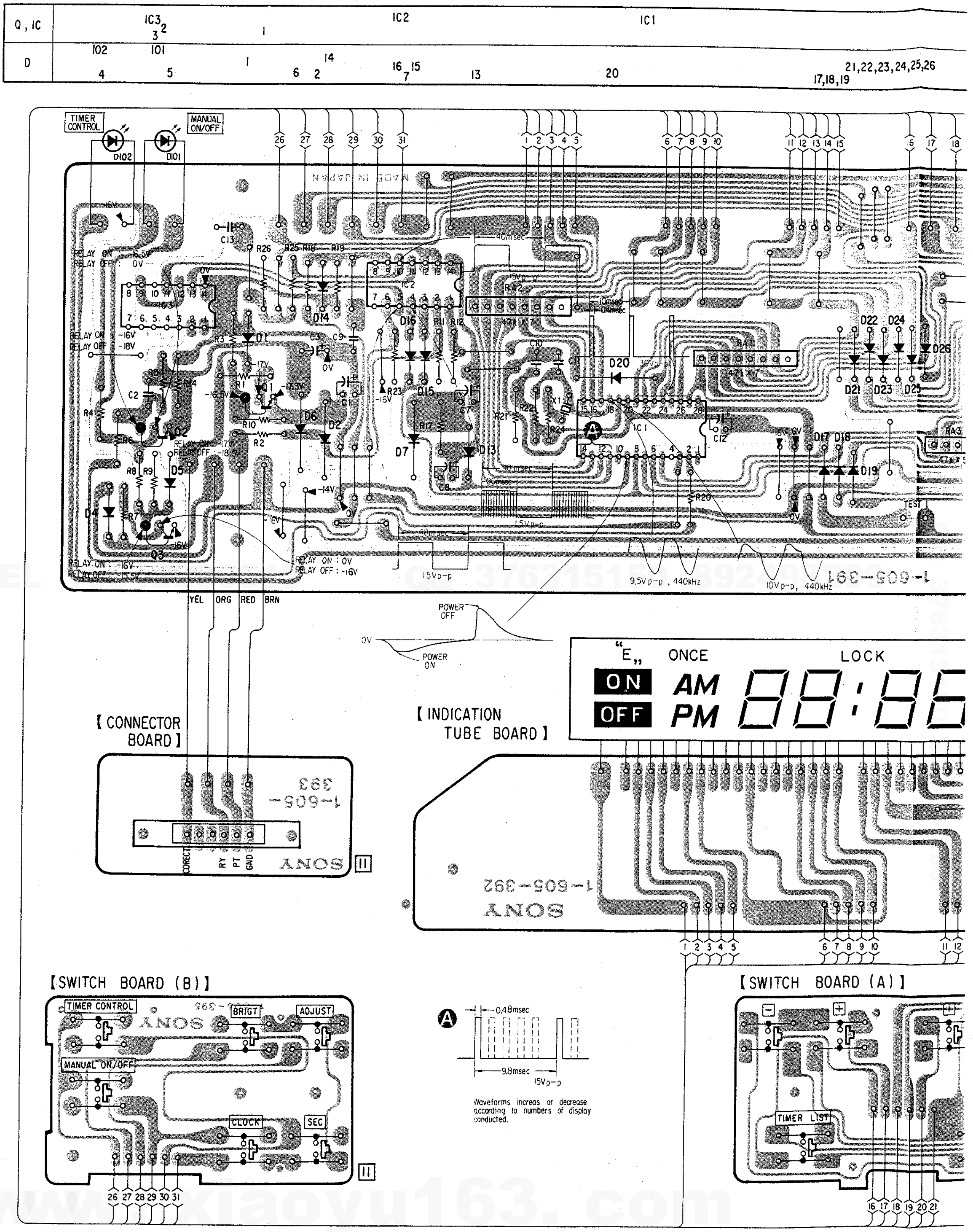

http://www.xiaoyu163.com

http://www.xiaoyu163.com

N 5
AMS

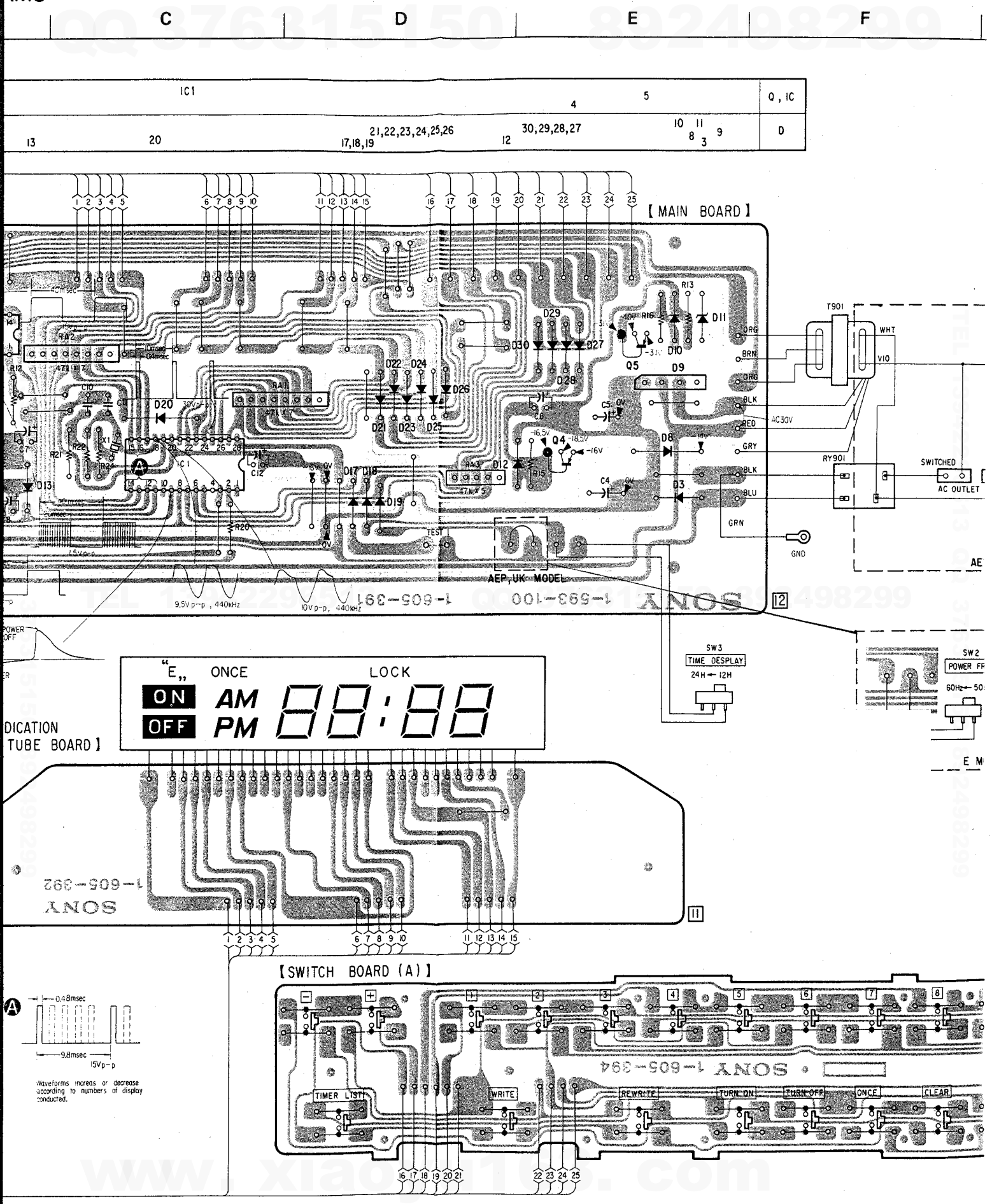

http://www.xiaoyu163.com

http://www.xiaoyu163.com

E F G H

4 5	Q , IC
12 30,29,28,27 8 3 10 11 9	D

Note:

● ○— : parts extracted from the component side.

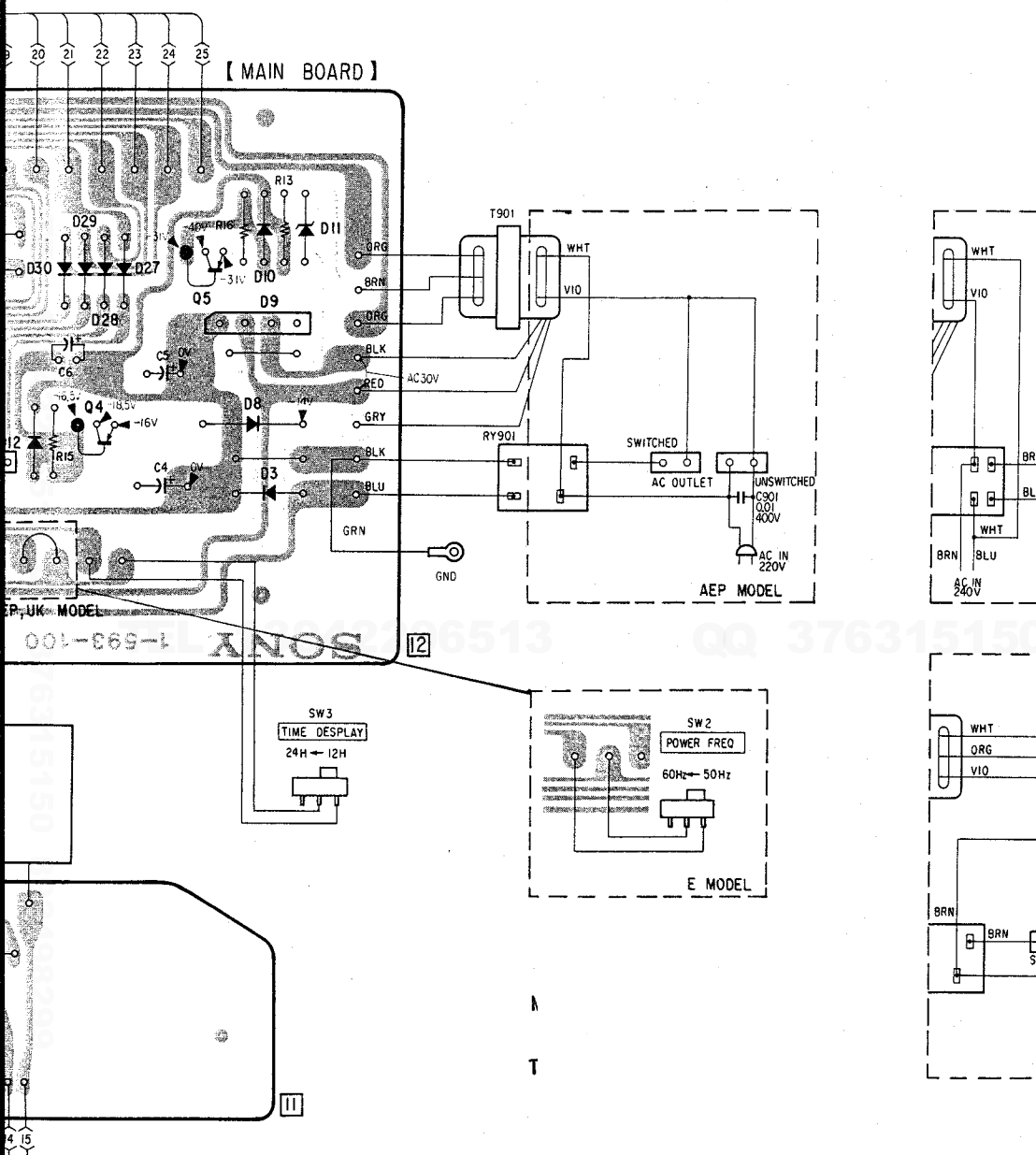

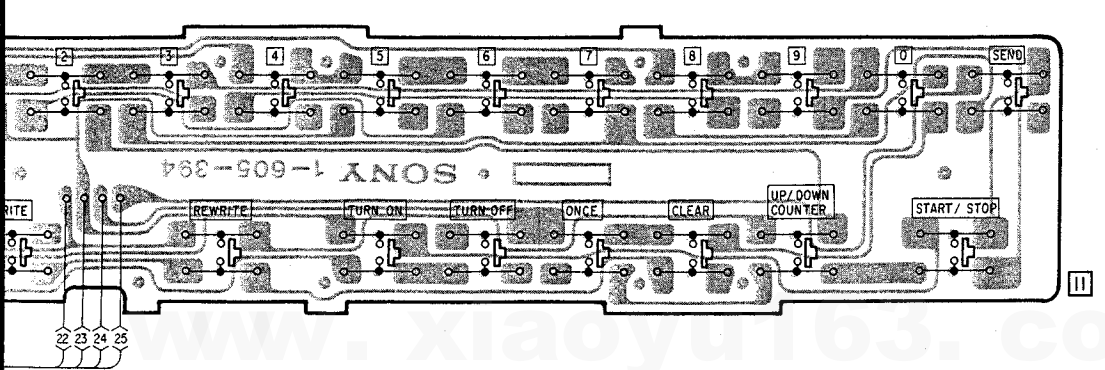

http://www.xiaoyu163.com

http://www.xiaoyu163.com

5-2 SCHEMATIC DIAGRAM

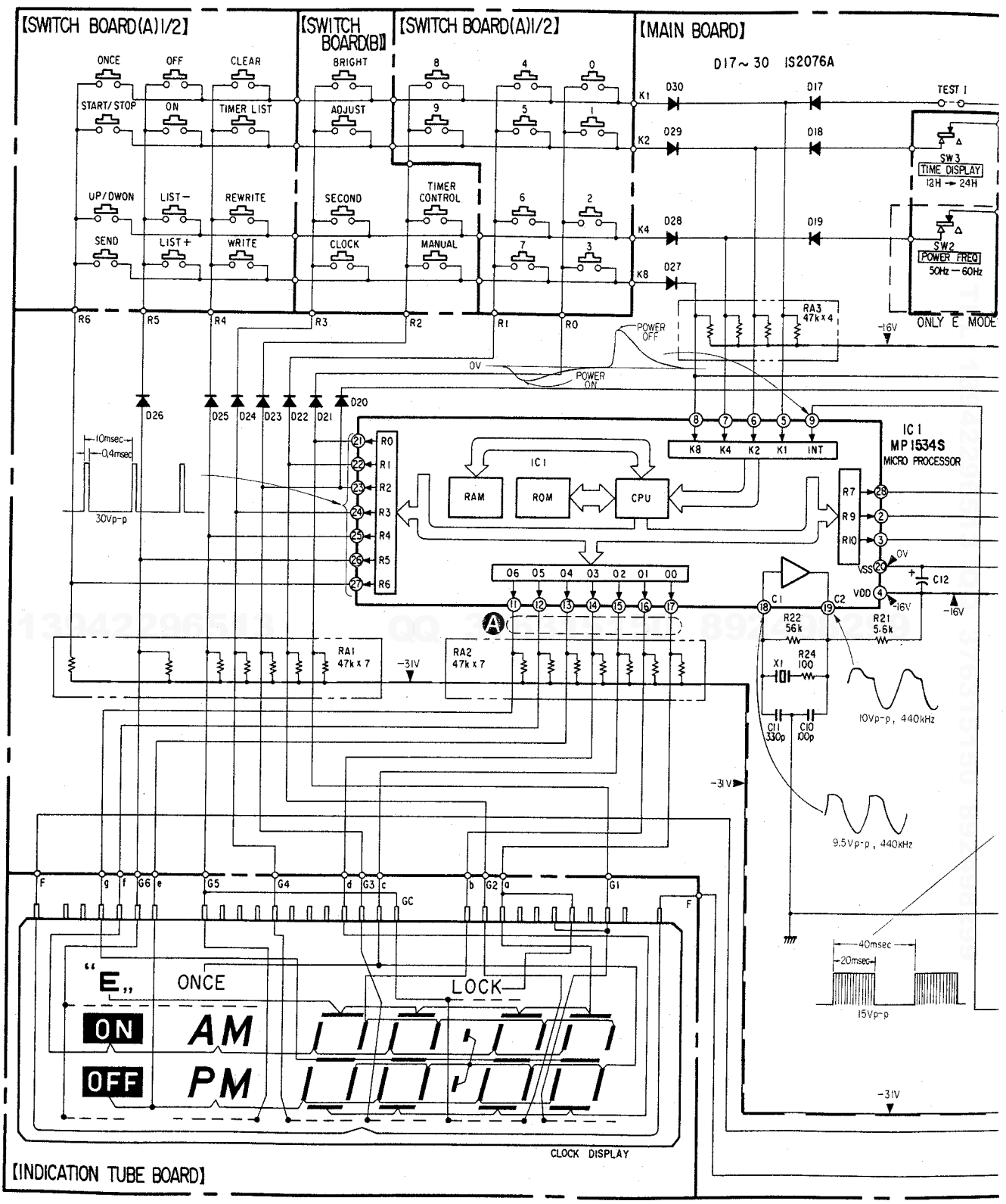

Waveforms increas or decrease according to numbers of display conducted.

http://www.xiaoyu163.com

http://www.xiaoyu163.com

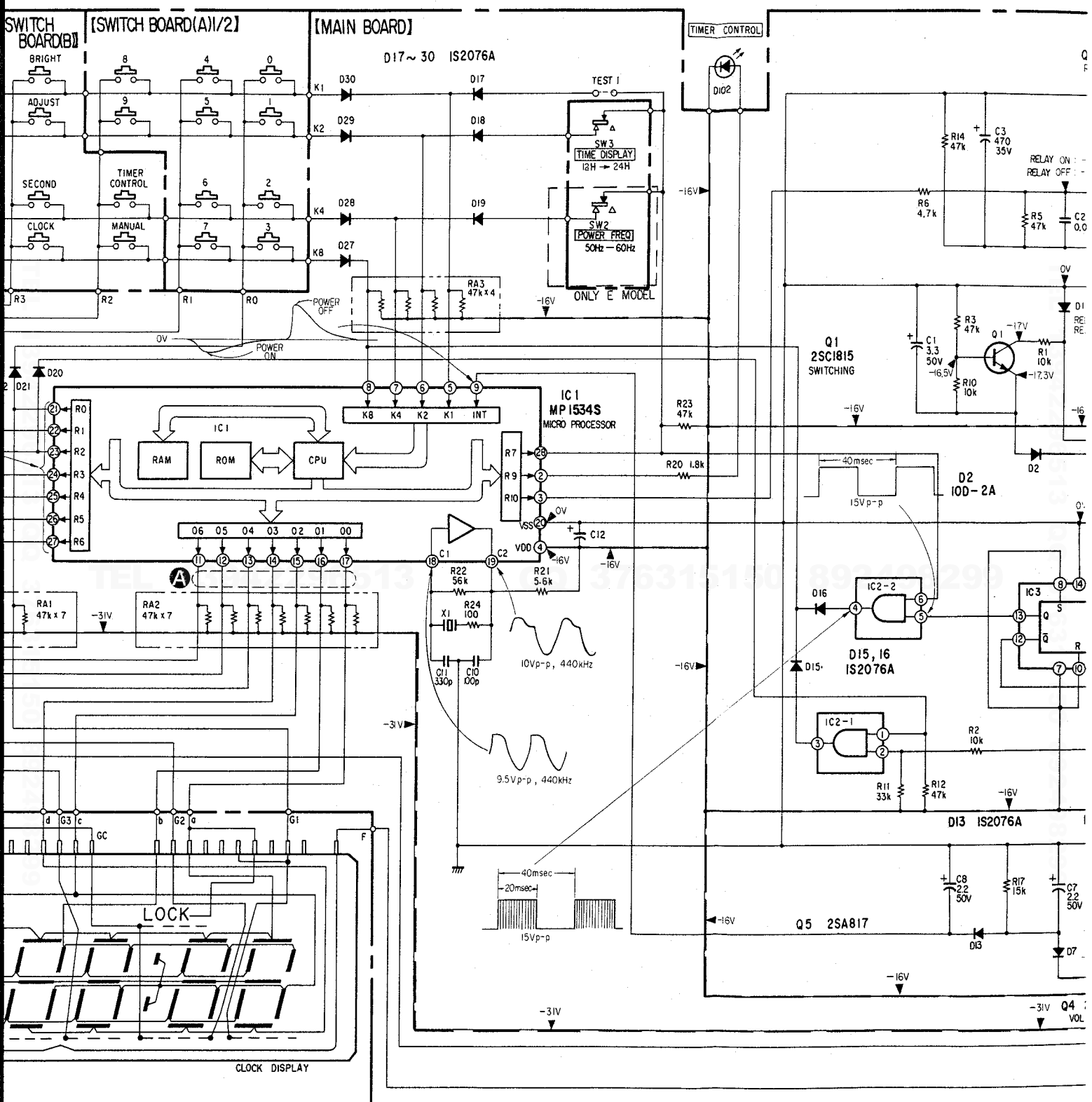

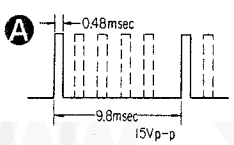

Waveforms increas or decrease according to numbers of display conducted.

http://www.xiaoyu163.com

http://www.xiaoyu163.com

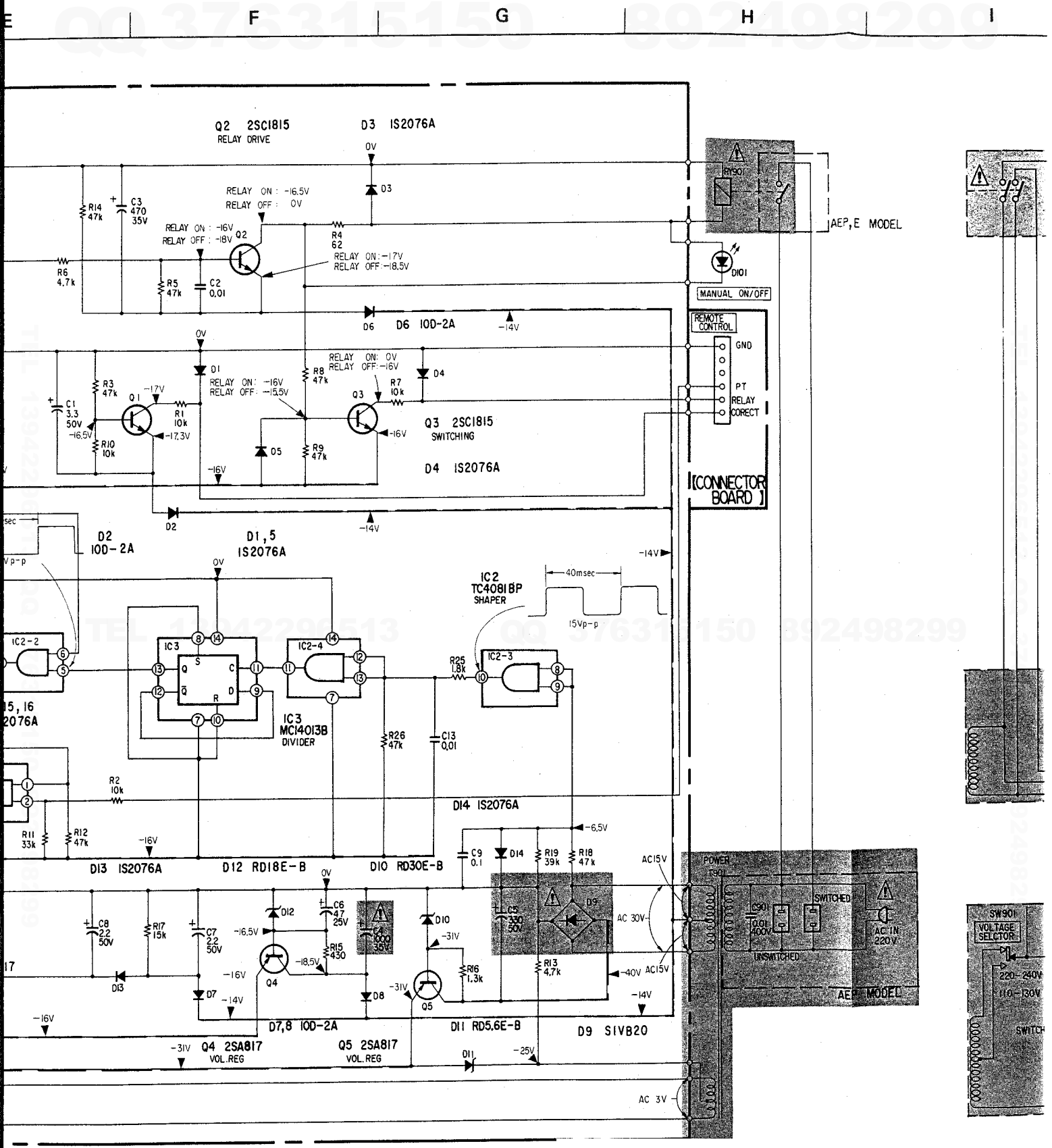

http://www.xiaoyu163.com

http://www.xiaoyu163.com

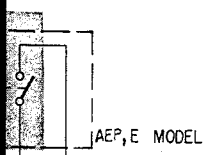

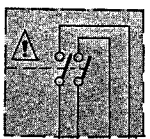

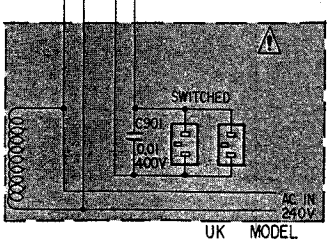

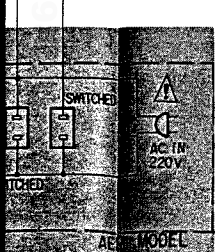

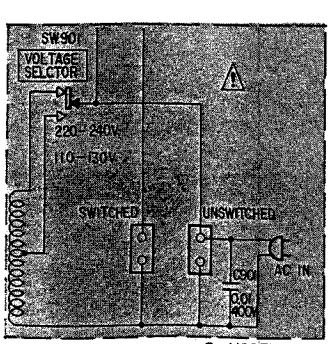

Replacement Semiconductors

For replacement, use semiconductor except it ( ).

MP1534S **TC4081BP** **TC4013BP** 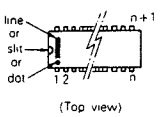 (Top view)	**2SC1364 (2SC1815-GR)**
2SA835 (2SA817-Y) 	**GL-3NG5** **GL-3PR5** 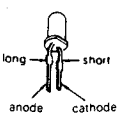
1S1585 (1S2076A) **10E-2 (19D-2A)** **RD30E-B** **RD5.6E-B** **RD18E-B** 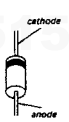	**S1VB20** 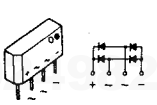

Note: The components identified by shading and ⚠ mark are critical for safety. Replace only with part number specified.

Note:

- All capacitors are in μF unless otherwise noted. pF: μμF 50WV or less are not indicated except for electrolytics and tantalums.
- All resistors are in ohms, 1/4 W unless otherwise noted. kΩ : 1000 Ω, MΩ : 1000 kΩ
- ▭ : panel designation.
- ——— : B- bus.
- Voltages are dc with respect to ground unless otherwise noted.
- Readings are taken under no-signal conditions.
- Voltage variations may be noted due to normal production tolerances.
- Switch

Ref. No.	Switch	Position
SW2	POWER FREQ	50 Hz
SW3	24H/12H	12H

Note: Voltages are measured with a VOM (50kΩ/V).

http://www.xiaoyu163.com

http://www.xiaoyu163.com

SECTION 6
EXPLODED VIEWS AND PARTS LIST

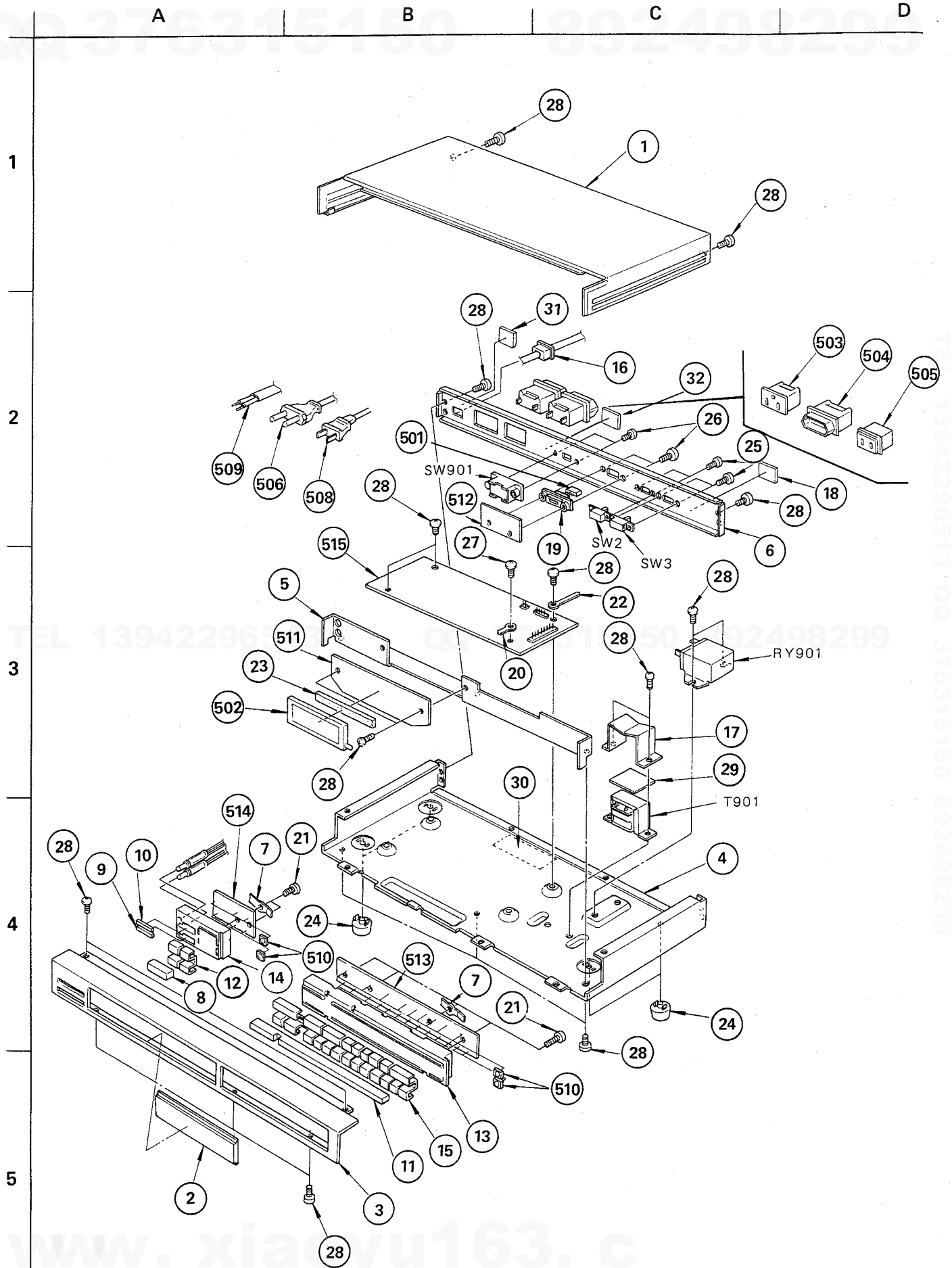

http://www.xiaoyu163.com

http://www.xiaoyu163.com

D

GENERAL SECTION

No.	Part No.	Description
1	2-196-406-00	CASE
2	2-197-301-00	COVER, INDICATOR
3	2-197-302-00	PANEL
4	♦;2-197-304-00	CHASSIS
5	♦;2-197-305-00	PANEL, SUB
6	♦;2-197-306-00	(E).....PLETE, JA
6	♦;2-197-307-00	(AEP)...PLATE, JA
6	♦;2-197-308-00	(UK)....PLETE, JA
7	♦;2-197-310-00	CONTACT, GROUND
8	2-197-311-00	COVER (B), KEY TOP
9	2-197-312-01	BUTTON (B), KEY
10	2-197-312-11	BUTTON (A), KEY
11	2-197-313-00	COVER (A), KEY TOP
12	2-197-314-00	KEY TOP (B)
13	2-197-315-00	FRAME (A), SWITCH
14	2-197-316-00	FRAME (B), SWITCH
15	2-197-317-00	KEY TOP (A)
16	3-703-244-00	BUSHING, CORD
17	2-193-942-00	SHIELD PLATE, TRANSFORMER
18	♦;4-844-449-00	LABEL
19	4-864-715-00	WASHER, CONNECTOR
20	7-623-508-01	LUG, 3
21	7-685-135-69	SCREW +P 2.6X10 TYPE4
22	3-701-822-00	HOLDER, CORD
23	9-911-845-XX	CUSHION, INDICATOR TUBE
24	X-3701-069-0	FOOT ASSY, M.F
25	7-621-283-00	SCREW +P 2X5
26	7-685-646-29	TA, SCREW +BV 3X8 TYPE2
27	7-685-871-01	SCREW +BVTT 3X6
28	7-685-871-09	SCREW +BVTT 3X6
29	9-911-863-99	CUSHION
30	3-703-043-21	(UK)....LABEL, CAUTION, MAIN
31	3-703-082-21	(UK)....LABEL, CAUTION, SUB
32	3-703-396-00	(UK)....LABEL, CAUTION, POWER

ACCESSORY & PACKING MATERIAL

No.	Part No.	Description
51	⚠1-526-565-00	(E1)....AC PLUG ADAPTER
52	2-193-933-00	CUSHION
53	2-197-318-00	INDIVIDUAL CARTON
54	3-701-630-00	BAG, POLYETHYLENE
55	3-701-665-00	BAG, POLYETHYLENE
56	3-783-639-11	MANUAL, INSTRUCTION
57	3-795-225-11	CARD, CONTROL

ELECTRICAL PARTS

No.	Part No.	Description
	♦;1-508-994-00	PIN, CONNECTOR
	1-519-245-00	INDICATOR TUBE, FLUORESCENT
	⚠1-526-636-00	(UK)....OUTLET, AC
	⚠1-526-694-00	(AEP)...OUTLET, AC
	⚠1-526-699-00	(E).....OUTLET, AC
	⚠1-534-817-XX	(AEP)...CORD, POWER, EULO PLUG
	♦;1-535-121-00	TERMINAL
508	⚠1-551-511-00	(E)....CORD POWER
509	⚠1-551-884-00	(UK)...CORD POWER
510	1-553-235-00	SWITCH, KEY BOARD
511	♦;1-605-392-00	PC BOARD, INDICATOR TUBE
512	♦;1-605-393-00	PC BOARD, CONNECTOR
513	♦;1-605-394-00	PC BOARD, SWITCH (A)
514	♦;1-605-395-00	PC BOARD, SWITCH (B)
515	♦;A-4351-264-A	MOUNTED PCB, MAIN
C4	⚠1-123-349-00	CAP, ELECT 1000MF/35V
C5	⚠1-123-362-00	CAP, ELECT 330MF/50V
C901	⚠1-161-744-00	CAP, CERAMIC 0.01 400V
D1	8-719-815-85	DIODE 1S1585
D2	8-719-200-02	DIODE 10E-2
D3	8-719-815-85	DIODE 1S1585
D4	8-719-815-85	DIODE 1S1585
D5	8-719-815-85	DIODE 1S1585
D6	8-719-200-02	DIODE 10E-2
D7	8-719-200-02	DIODE 10E-2
D8	8-719-200-02	DIODE 10E-2
D9	⚠8-719-511-20	DIODE S1VB20
D10	8-719-100-07	DIODE RD30E-B
D11	8-719-156-25	DIODE RD5.6E-B
D12	8-719-118-07	DIODE RD18E-B
D13	8-719-815-85	DIODE 1S1585
D14	8-719-815-85	DIODE 1S1585
D15	8-719-815-85	DIODE 1S1585
D16	8-719-815-85	DIODE 1S1585
D17	8-719-815-85	DIODE 1S1585
D18	8-719-815-85	DIODE 1S1585
D19	8-719-815-85	DIODE 1S1585
D20	8-719-815-85	DIODE 1S1585
D21	8-719-815-85	DIODE 1S1585
D22	8-719-815-85	DIODE 1S1585
D23	8-719-815-85	DIODE 1S1585
D24	8-719-815-85	DIODE 1S1585
D25	8-719-815-85	DIODE 1S1585
D26	8-719-815-85	DIODE 1S1585
D27	8-719-815-85	DIODE 1S1585

NOTE:
- Items with no part number and no description are not stocked because they are seldom required for routine service.
- Items marked " ♦ " are not stocked since they are seldom required for routine service. Some delay should be anticipated when ordering these items.
- Due to standardization, parts with part numbers (Δ-ΔΔΔ-ΔΔΔ-XX or Δ-ΔΔΔΔ-ΔΔΔ-X) may be different from those used in the set.

CAPACITORS:
- All capacitors are in μF. Common capacitors are omitted. Refer to the following lists for their part numbers. MF:μF, PF:μμF.

RESISTORS
- All resistors are in ohms. Common 1/4W, 1/8W and 1/16W carbon resistors are omitted. Refer to the following lists for their part numbers.
- F : nonflammable

The components identified by shading and mark ⚠ are critical for safety. Replace only with part number specified.

COILS
- MMH : mH, UH : μH

http://www.xiaoyu163.com

http://www.xiaoyu163.com

ELECTRICAL PARTS

Ref.No.	Part No.	Description
D28	8-719-815-85	DIODE 1S1585
D29	8-719-815-85	DIODE 1S1585
D30	8-719-815-85	DIODE 1S1585
D101	8-719-930-50	DIODE GL-3NG5
D102	8-719-903-05	DIODE GL-3PR5
IC1	1-806-322-12	PROCESSOR, MICRO MP1534S
IC2	8-759-240-81	IC TC4081BP
IC3	8-759-240-13	IC TC4013BP
Q1	8-729-663-47	TRANSISTOR 2SC1364
Q2	8-729-663-47	TRANSISTOR 2SC1364
Q3	8-729-663-47	TRANSISTOR 2SC1364
Q4	8-762-020-00	TRANSISTOR 2SA835
Q5	8-762-020-00	TRANSISTOR 2SA835

ELECTRICAL PARTS

Ref.No.	Part No.	Description
RA1	1-235-029-00	RES, ARRAY
RA2	1-235-029-00	RES, ARRAY
RY901⚠	1-515-443-00	(UK).....RELAY
RY901⚠	1-515-444-00	(AEP,E)...RELAY
SW2	1-552-436-00	SWITCH, SLIDE
SW3	1-552-436-00	SWITCH, SLIDE
SW901⚠	1-552-535-00	(E)....SWITCH, POWER & VOLTAGE CHANGE
T901 ⚠	1-447-235-00	(AEP)...TRANSFORMER, POWER
T901 ⚠	1-447-236-00	(UK).....TRANSFORMER, POWER
T901 ⚠	1-447-237-00	(E).....TRANSFORMER, POWER
X1	1-527-862-00	OSCILLATOR, CERAMIC

NOTE:
- Items with no part number and no description are not stocked because they are seldom required for routine service.
- Items marked " ♦ " are not stocked since they are seldom required for routine service. Some delay should be anticipated when ordering these items.
- Due to standardization, parts with part numbers (Δ-ΔΔΔ-ΔΔΔ-XX or Δ-ΔΔΔΔ-ΔΔΔ-X) may be different from those used in the set.

CAPACITORS:
- All capacitors are in μF. Common capacitors are omitted. Refer to the following lists for their part numbers. MF:μF, PF:μμF.

RESISTORS
- All resistors are in ohms. Common 1/4W, 1/8W and 1/16W carbon resistors are omitted. Refer to the following lists for their part numbers.
- F : nonflammable

The components identified by shading and mark ⚠ are critical for safety. Replace only with part number specified.

COILS
- MMH : mH, UH : μH

TEL 13942296513 QQ 376315150 892498299

www.xiaoyu163.com

Sony Corporation
Audio Group © 1981

9-950-726-11

81K0695-1
Printed in Japan

http://www.xiaoyu163.com