PS-X35

AEP Model
UK Model
E Model
Canadian Model

STEREO TURNTABLE SYSTEM

SPECIFICATIONS

GENERAL

Power Requirements: 220 V ac ~, 50/60 Hz (or 240 V ac ~ adjustable by authorized Sony personnel) (AEP model)
240 V ac ~, 50/60 Hz (or 220 V ac ~ adjustable by authorized Sony personnel) (UK model)
120 V ac ~, 60 Hz (Canadian model)
110 – 120, 220 – 240 V ac ~ adjustable, 50/60 Hz (E model)

Power Consumption: 8 W

Dimensions: Approx. 445 (w) x 140 (h) x 395 (d) mm
17½ (w) x 5½ (h) x 15½ (d) inches
including projecting parts and controls

Weight: Approx. 5.8 kg, 12 lb 13 oz (net)
Approx. 7.1 kg, 15 lb 10 oz (in shipping carton)

TURNTABLE

Platter: 31.3 cm, 12⅜ inches, aluminum-alloy diecast

Motor: Linear BSL (brushless and slotless) motor

Drive System: Direct drive, crystal lock control system

Speed: 33⅓, 45 rpm

Starting Characteristics: Comes to nominal speed within a half revolution (33⅓ rpm)

Wow and Flutter: ±0.05 % (DIN)
0.03 % (WRMS)

S/N Ratio: 73 dB (DIN-B)

Load Characteristics: 0 % up to 70 g tracking force

Automatic System: Lead-in, return, reject, repeat

— Continued on page 2 —

SAFETY-RELATED COMPONENT WARNING!!

COMPONENTS IDENTIFIED BY SHADING AND MARK ⚠ ON THE SCHEMATIC DIAGRAMS, EXPLODED VIEWS AND IN THE PARTS LIST ARE CRITICAL TO SAFE OPERATION. REPLACE THESE COMPONENTS WITH SONY PARTS WHOSE PART NUMBERS APPEAR AS SHOWN IN THIS MANUAL OR IN SUPPLEMENTS PUBLISHED BY SONY.

ATTENTION AU COMPOSANT AYANT RAPPORT À LA SÉCURITÉ!

LES COMPOSANTS IDENTIFIÉS PAR UNE TRAME ET UNE MARQUE ⚠ SUR LES DIAGRAMMES SCHÉMATIQUES, LES VUES EXPLOSÉES ET LA LISTE DES PIÈCES SONT CRITIQUES POUR LA SÉCURITÉ DE FONCTIONNEMENT. NE REMPLACER CES COMPOSANTS QUE PAR DES PIÈCES SONY DONT LES NUMÉROS SONT DONNÉS DANS CE MANUEL OU DANS LES SUPPLÉMENTS PUBLIÉS PAR SONY.

SONY®

SERVICE MANUAL

www.vinylengine.com

TONEARM

Type:	Statically balanced, universal
Pivot-to-stylus Length:	216.5 mm, 8 ½ inches
Overall Arm Length:	300 mm, 11⅞ inches
Overhang:	16.5 mm, 21/32 inches
Tracking Error:	+3°, −1°
Tracking Force Adjustment Range:	0 – 3 g
Headshell Weight:	8 g
Cartridge Weight. Range:	12 – 18 g including headshell

CARTRIDGE

(XL-15: AEP, UK, E model)

Frequency Range:	10 – 30,000 Hz
Channel Separation:	25 dB (1 kHz)
Output Voltage:	4 mV (1 kHz, 5 cm/sec, 45°)
Load Impedance:	50 – 100 kΩ
Stylus:	ND15G (Conical 0.6 mil diamond)
Tracking Force:	1.2 – 2.5 g
Weight:	5.2 g

MODEL IDENTIFICATION

– Specification Label –

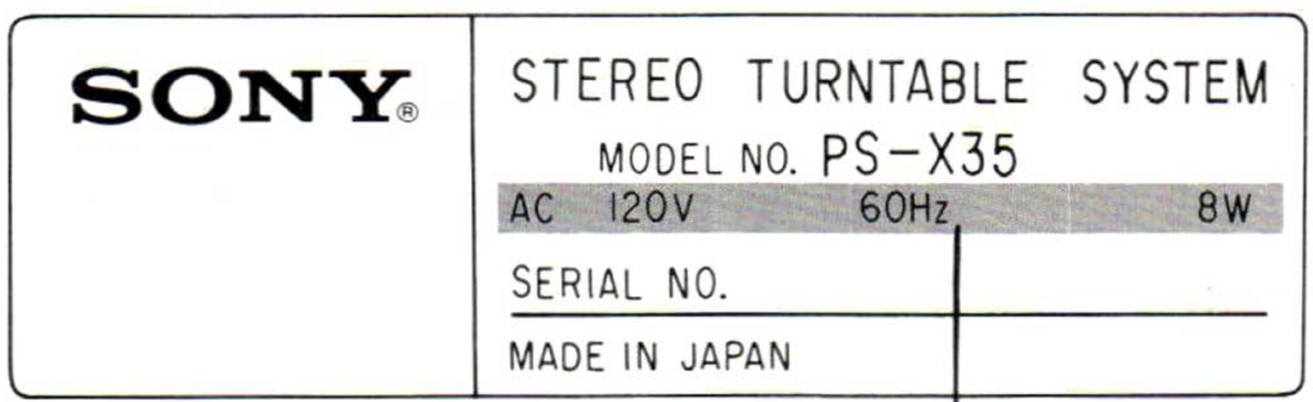

AC 120V	*60Hz*	*8W .... Canadian model*
AC 220V	*50/60Hz*	*8W .... AEP model*
AC 240V	*50/60Hz*	*8W .... UK model*
AC 110–120V / AC 220–240V	*50/60Hz*	*8W ... E model*

REPAIR CAUTION

1. Turntable handling

bottom view of turntable

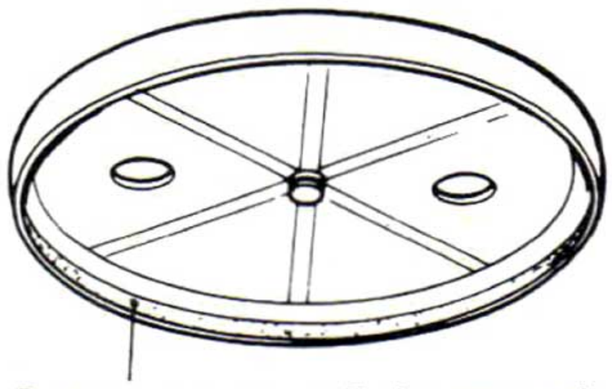

Be sure not to spoil the magnetic coating. (dark brown color)

2. Perform the adjustments and checks after the circuit becomes stable. (Wait several seconds after switching on the power.)

www.vinylengine.com

SECTION 1
OUTLINE

1-1. BLOCK DIAGRAM

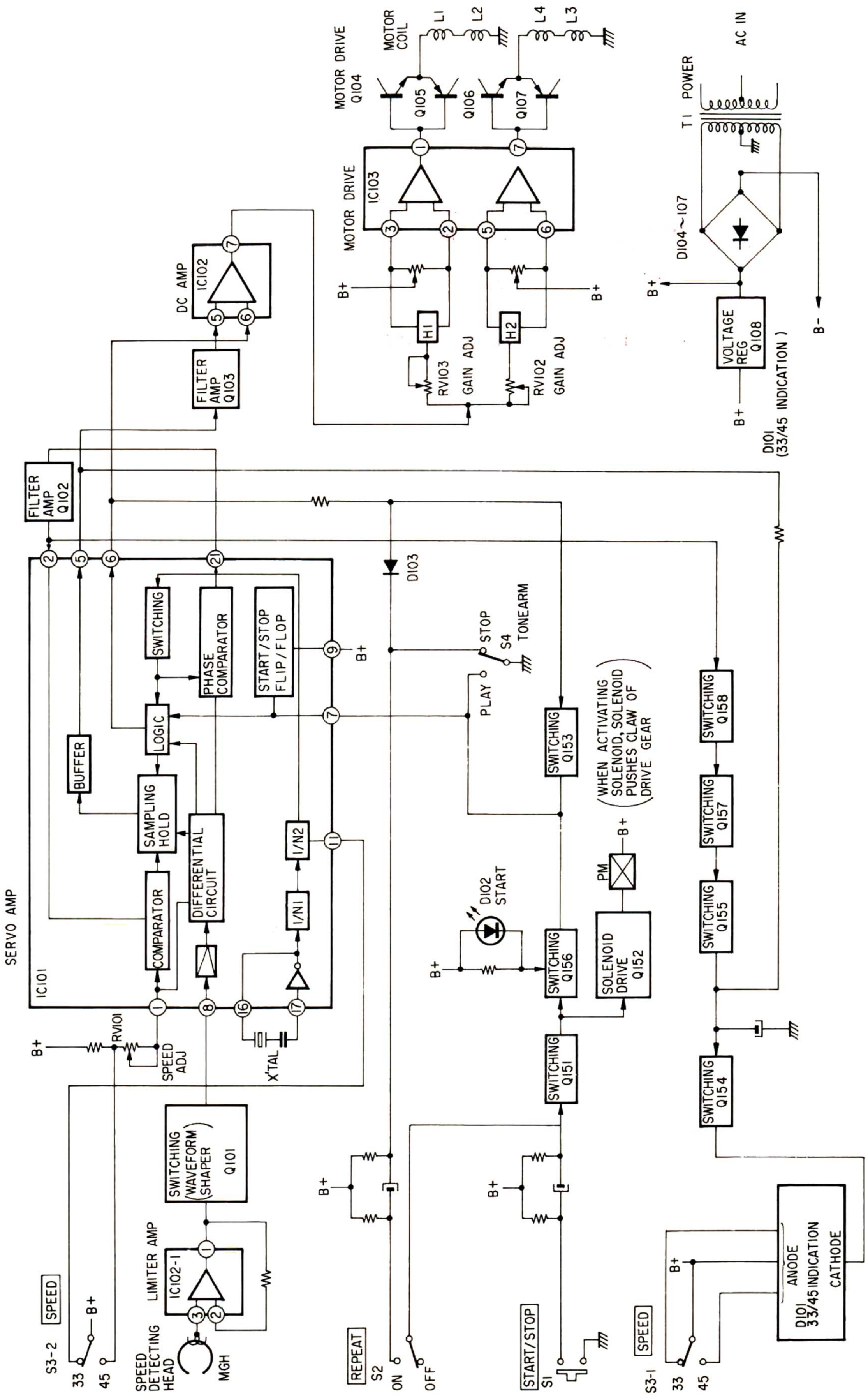

www.vinylengine.com

1-2. CIRCUIT DESCRIPTION

Crystal-lock Detection Circuit

When the turntable has reached its designated speed this circuit indicates that the crystal-lock circuit is operating by increasing the brightness of the LED which indicates speed.

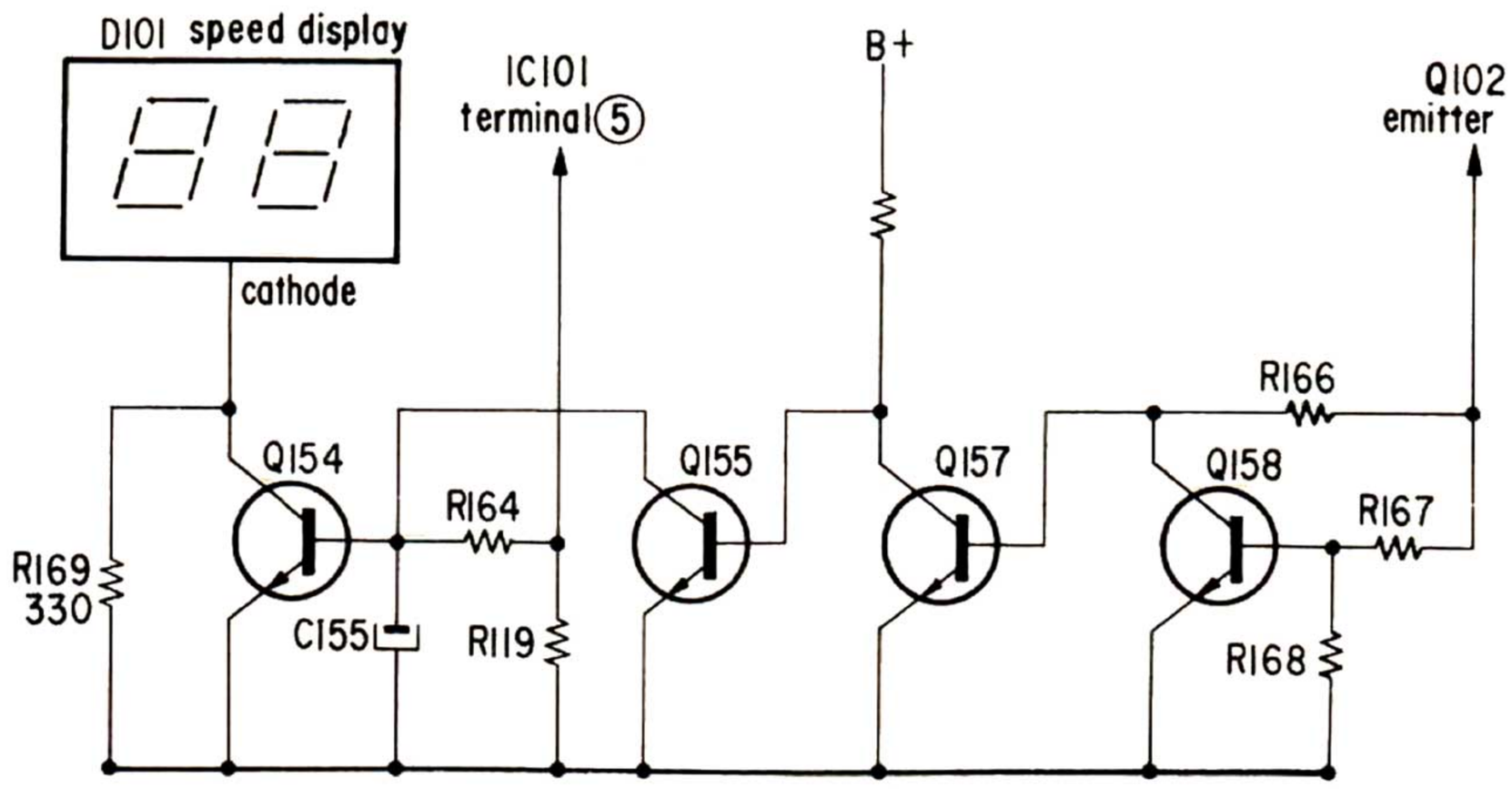

- **When the turntable speed is not controlled by the crystal-lock circuit.**

1. The emitter voltage of Q102 is zero and Q157 and Q158 are turned off. This turns Q155 on and Q154 off.
2. The cathode of D101 (LED) is grounded through R169, and D101 grows dim.

- **When the turntable speed is controlled by the crystal-lock circuit.**

1. The emitter voltage of Q102 is from 0.73 to 4.27V.
2. Q157 and Q158 are turned on. This turns Q155 off and Q154 on.
3. The cathode of D101 is grounded through Q154 and D101 brightens.

Note: When rotating the turntable clockwise, the voltage at terminal 5 of IC101 is from 0.6 to 3.5V. This potential turns Q154 on and D101 is brightly lit. When rotating the turntable in the reverse direction by hand, the voltage at terminal 5 of IC101 falls to zero, removing bias from the base of Q154 and turning it off. As a result, the cathode of D101 is grounded through R169, and D101 grows dim.

www.vinylengine.com

Start Operation : Refer to Fig. 1.

1. When START/STOP switch (S1) is depressed, currents (❶ to ❹) flow for a moment.
2. As Q156 is on, terminal ⑦ of IC101 is grounded (LOW level), and IC101 operates. At the same time D102 lights.
3. Q152 turns on, activating solenoid PM. The solenoid causes the motor gear to engage the pawl of the drive gear.
4. The turntable's revolving motion is transmitted to the drive gear so that the drive gear starts rotating. The tonearm moves toward the lead-in groove of the record.
5. Tonearm switch (S4) is mechanically switched to the PLAY position when the drive gear rotates, and the collector of Q156 and terminal ⑦ of IC101 are grounded. While the tonearm is off the tonearm rest, D102 continues to light and IC101 remains operating.
6. Since approximately 5.3V is generated at terminal ⑥ of IC101 during play, Q153 is turned on.

Stop Operation : Refer to Fig. 2.

1. When START/STOP switch (S1) is depressed, currents (❶ to ❹) flow for a moment.
2. Q152 turns on, and this activates solenoid PM. The drive gear rotates and the tonearm starts the return operation.
3. The tonearm returns to its rest governed by the rotation of the drive gear. While tonearm switch (S4) is mechanically returned to its original position (STOP), Q153 is on, and this grounds terminal ⑦ of IC101. Accordingly, IC101 remains operating and the turntable keeps rotating.
4. C154 is discharged through D103 and Q153 is turned off when the mechanism is completely reset.
5. Terminal ⑦ of IC101 becomes HIGH level and the turntable stops rotating.

Repeat Operation : Refer to Fig. 3.

1. REPEAT switch (S2): ON. When the tonearm enters the lead-out groove of the record, the revolution of the turntable is mechanically transmitted to the drive gear. The drive gear rotates and the tonearm starts the return operation.
2. Tonearm switch (S4) mechanically returns to its original position (STOP) when the tonearm ends the return operation.
3. Current ❶ flows, and this turns Q151 on so that currents ❷ , ❸ , and ❹ flow.
4. Since Q153 remains on, terminal ⑦ of IC101 is grounded (LOW level) and IC101 remains operating. The turntable keeps rotating. The drive gear rotates half a turn and the mechanism is completely reset. At the same time solenoid PM conducts because Q152 is on, and the motor gear is engaged with the pawl of the drive gear.
5. The turntable's revolving motion is transmitted to the drive gear, the drive gear starts rotating and the tonearm moves again toward the lead-in groove of the record.
6. The unit stops the repeat operation when REPEAT switch (S2) is turned off.

www.vinylengine.com

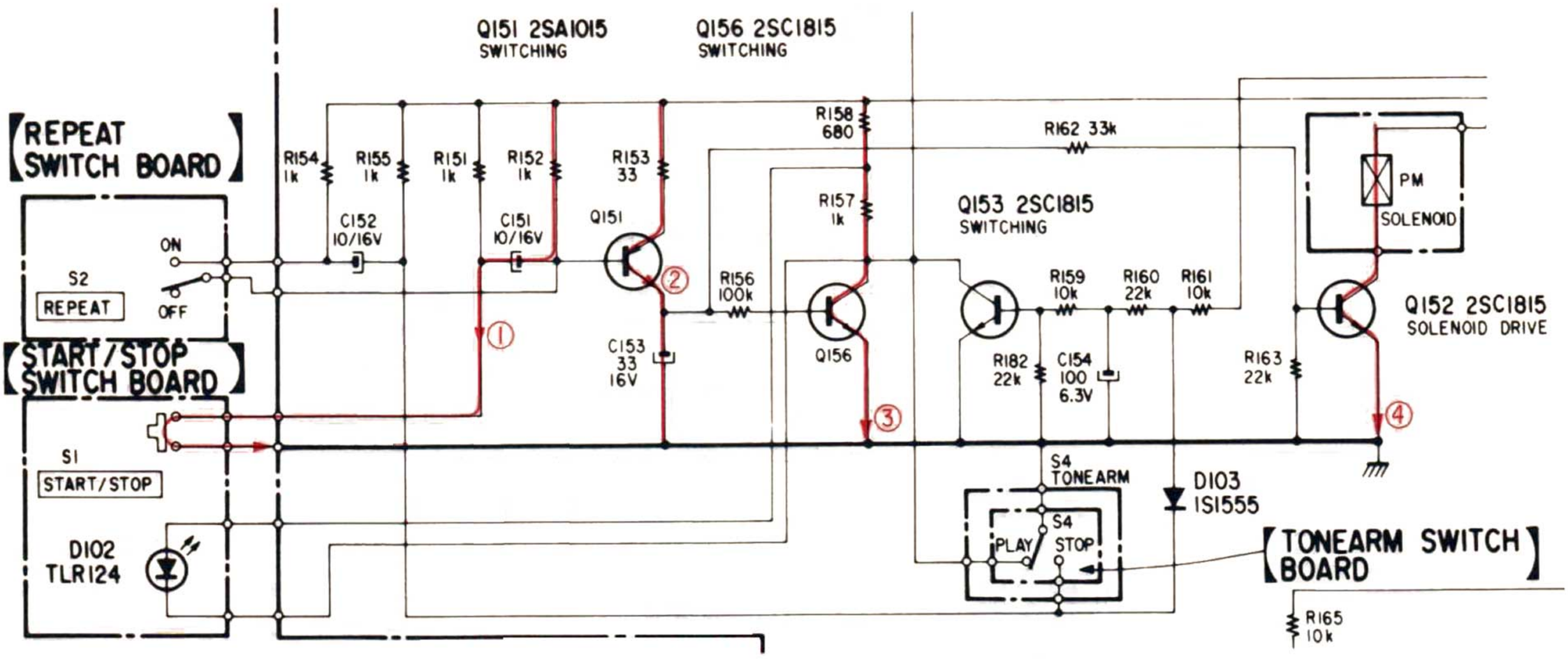

Fig. 1

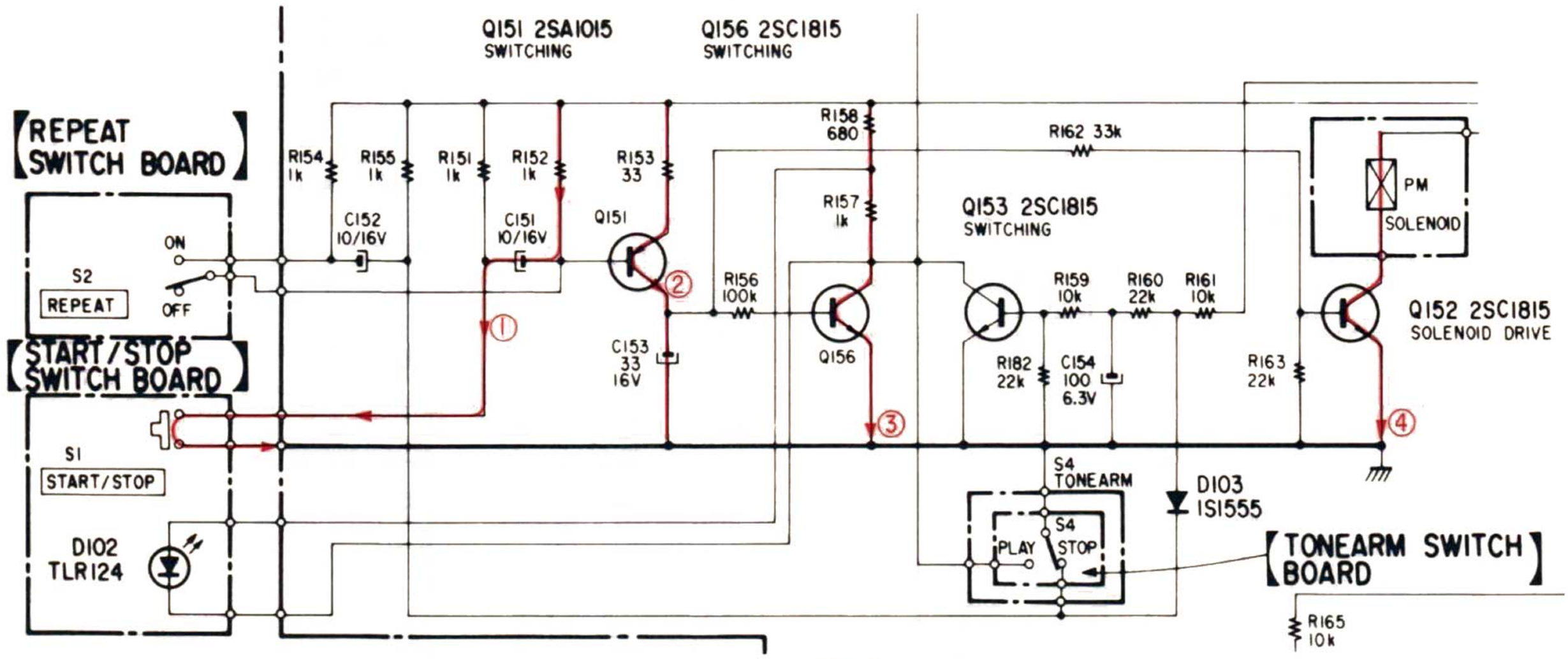

Fig. 2

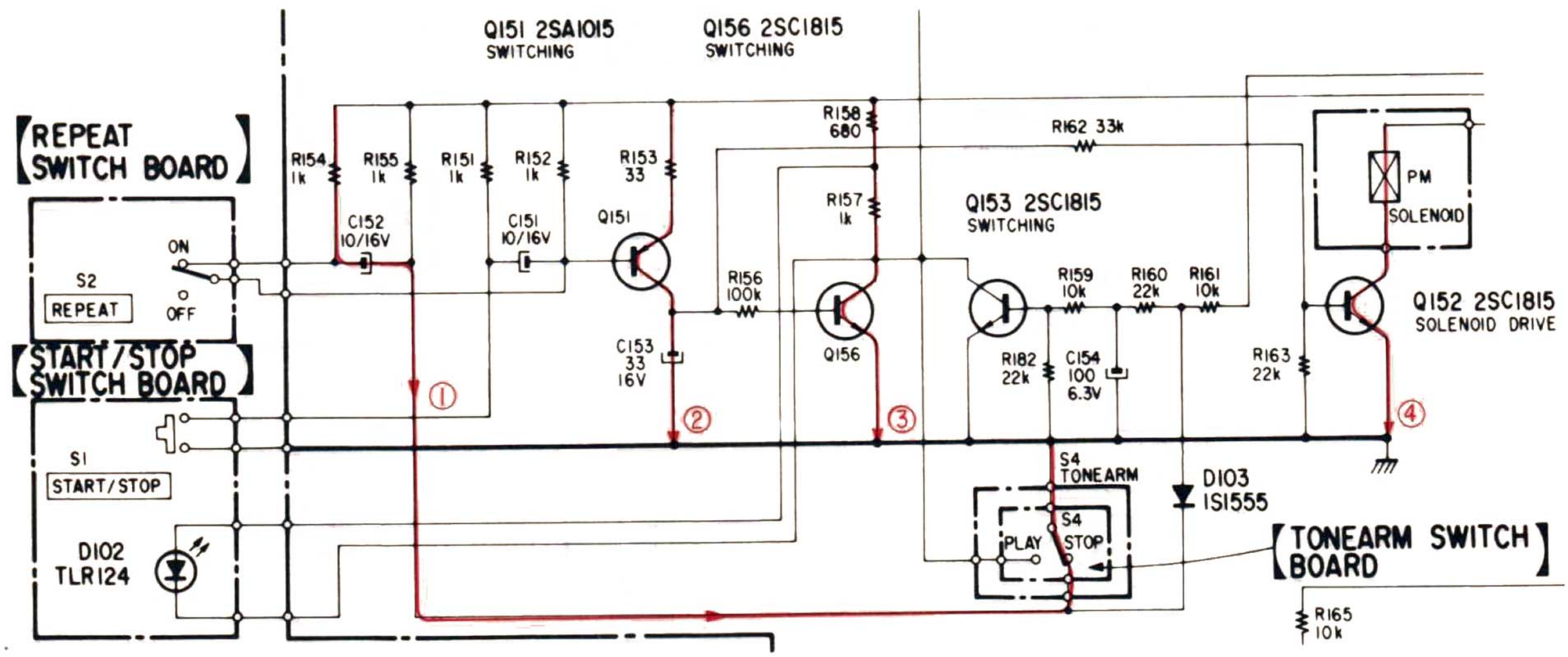

Fig. 3

www.vinylengine.com

SECTION 2
DISASSEMBLY

DUST COVER REMOVAL

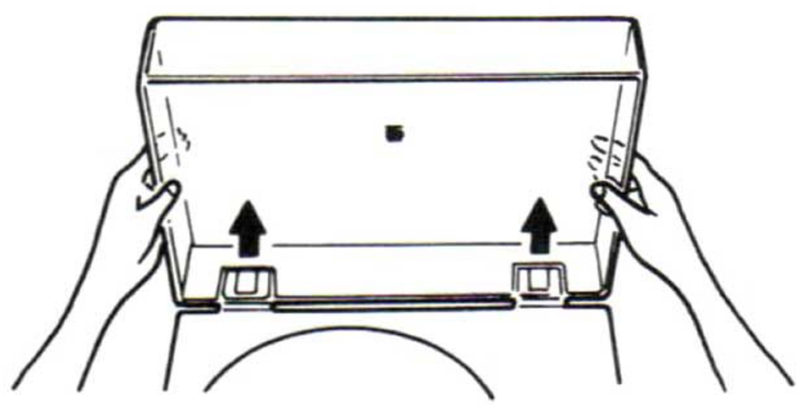

Fig. 2-1

TURNTABLE REMOVAL

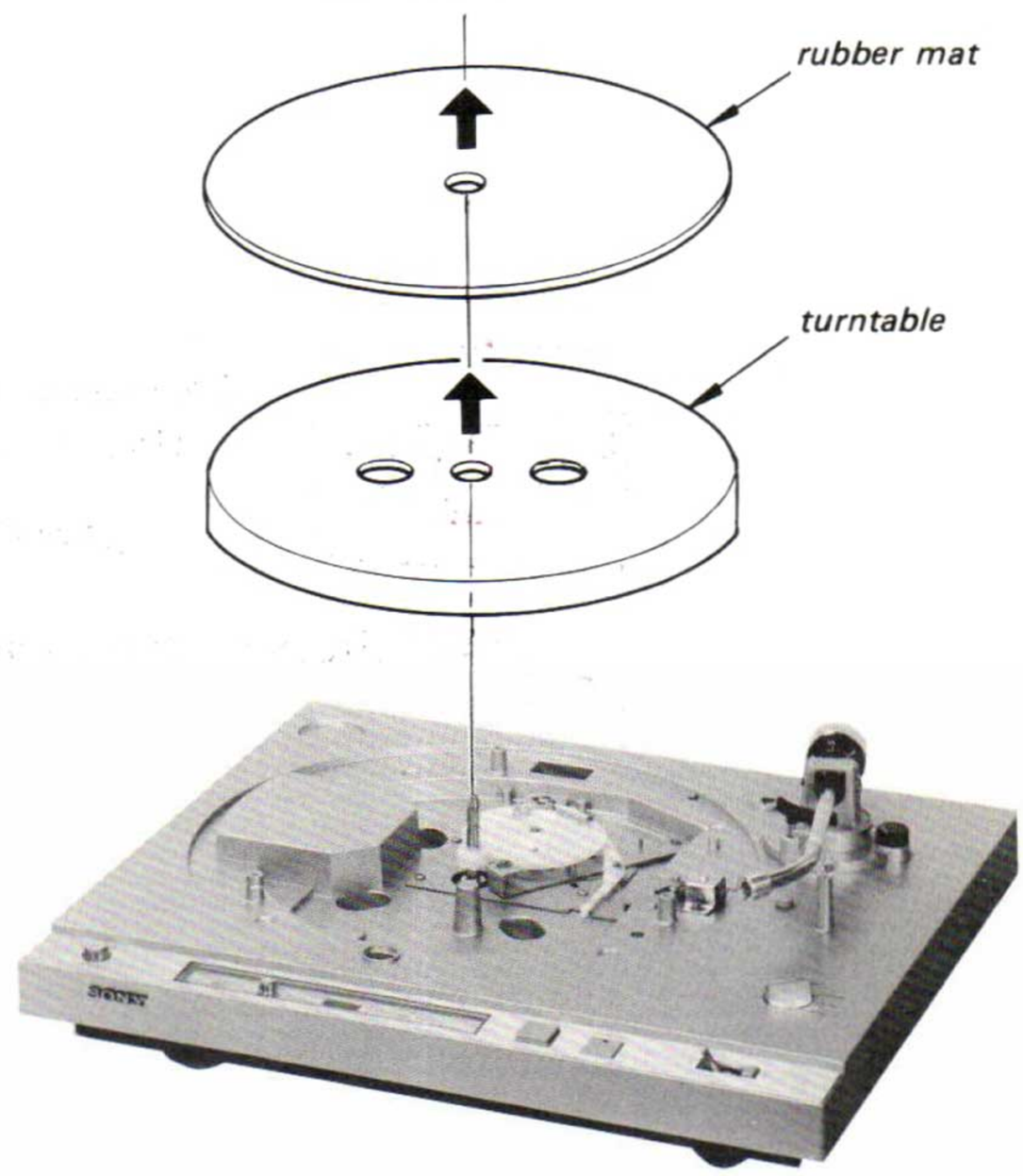

Fig. 2-2

BOTTOM BOARD REMOVAL

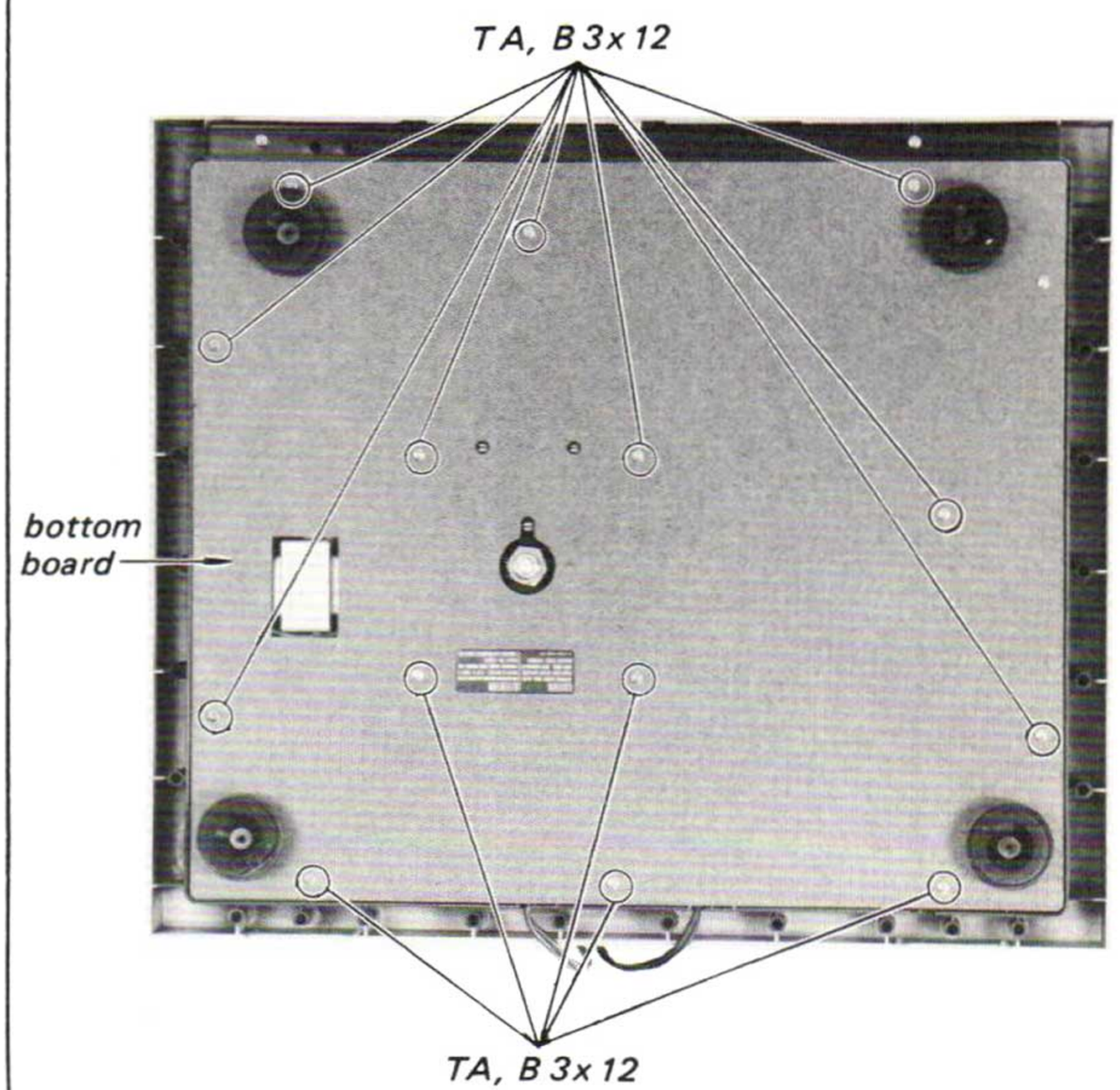

Fig. 2-3

www.vinylengine.com

Note: Follow the disassembly procedure in the numerical order given.

SERVO AMP BOARD AND MOTOR SECTION REMOVAL

1. Remove the screws marked ❶ in Fig. 2-4 and then perform ❷.
2. Confirm that the teeth on the turntable boss and the drive gear are positioned as shown in Fig. 2-5. Then, remove the servo amp board and the motor section downward.

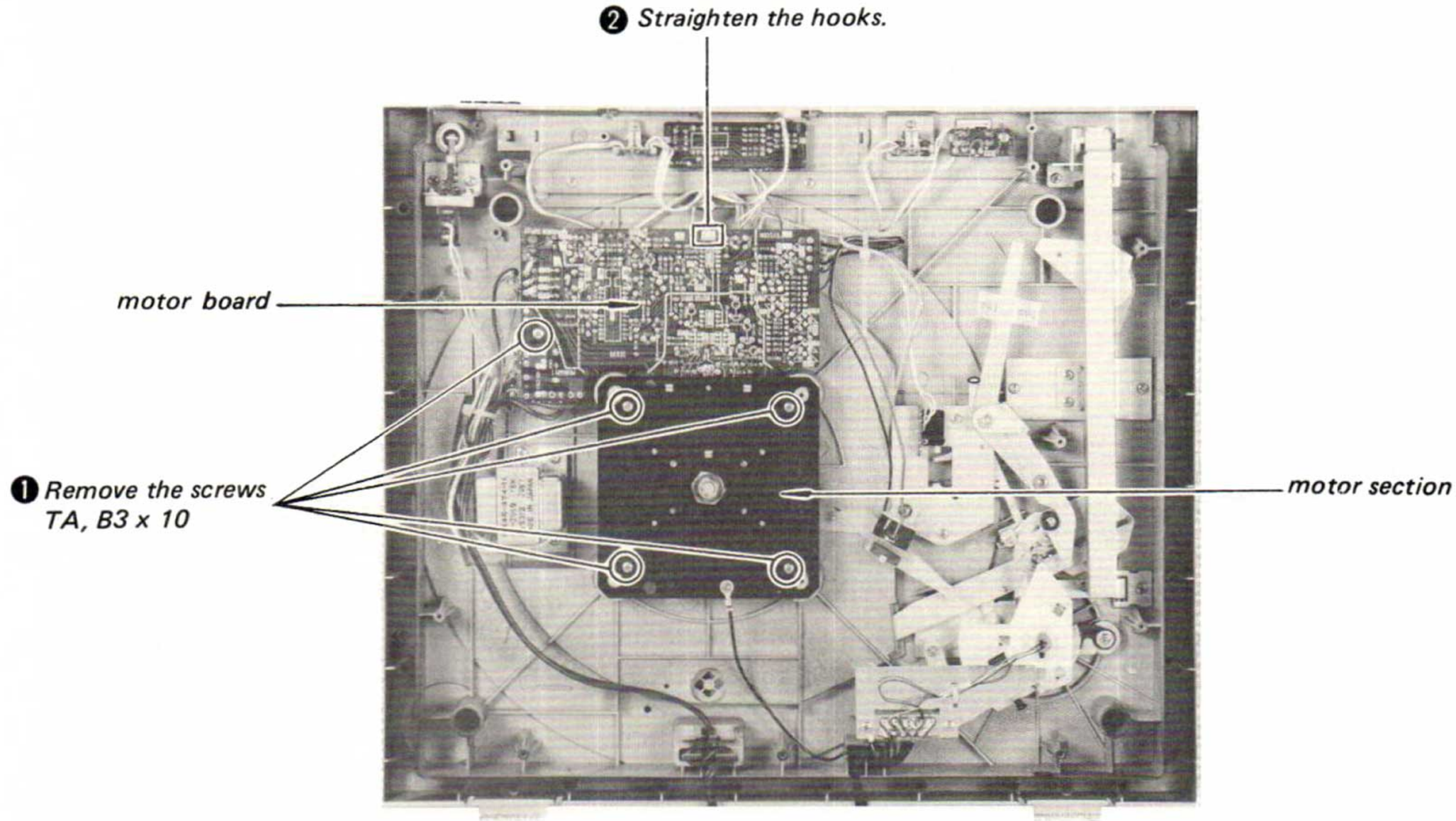

Fig. 2-4

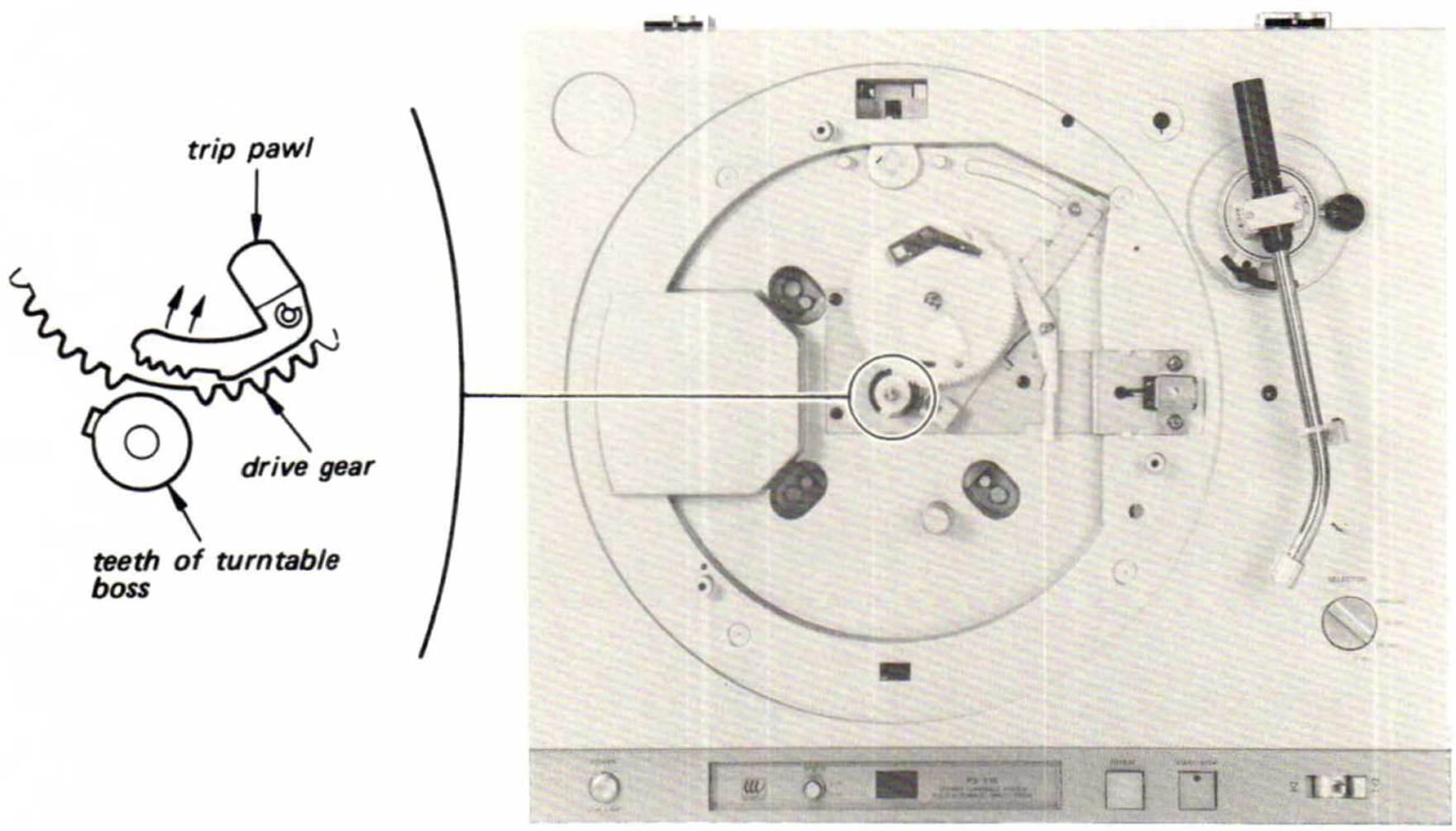

Fig. 2-5

www.vinylengine.com

TONEARM REMOVAL

Turn the set upside-down and remove in the numerical order.

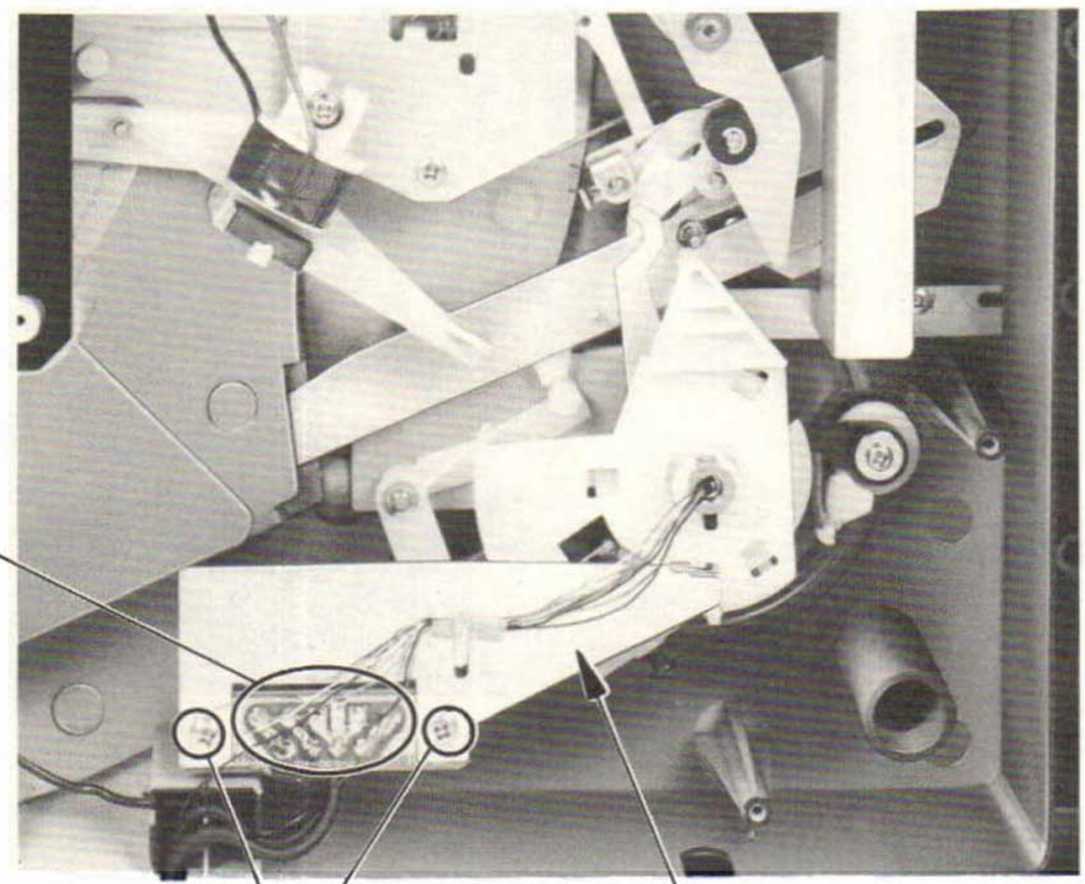

❶ *Remove the lead wires.*

❷ *Remove the screws TA, B 3x10.*

❸ *Remove the shield plate.*

Fig. 2-6

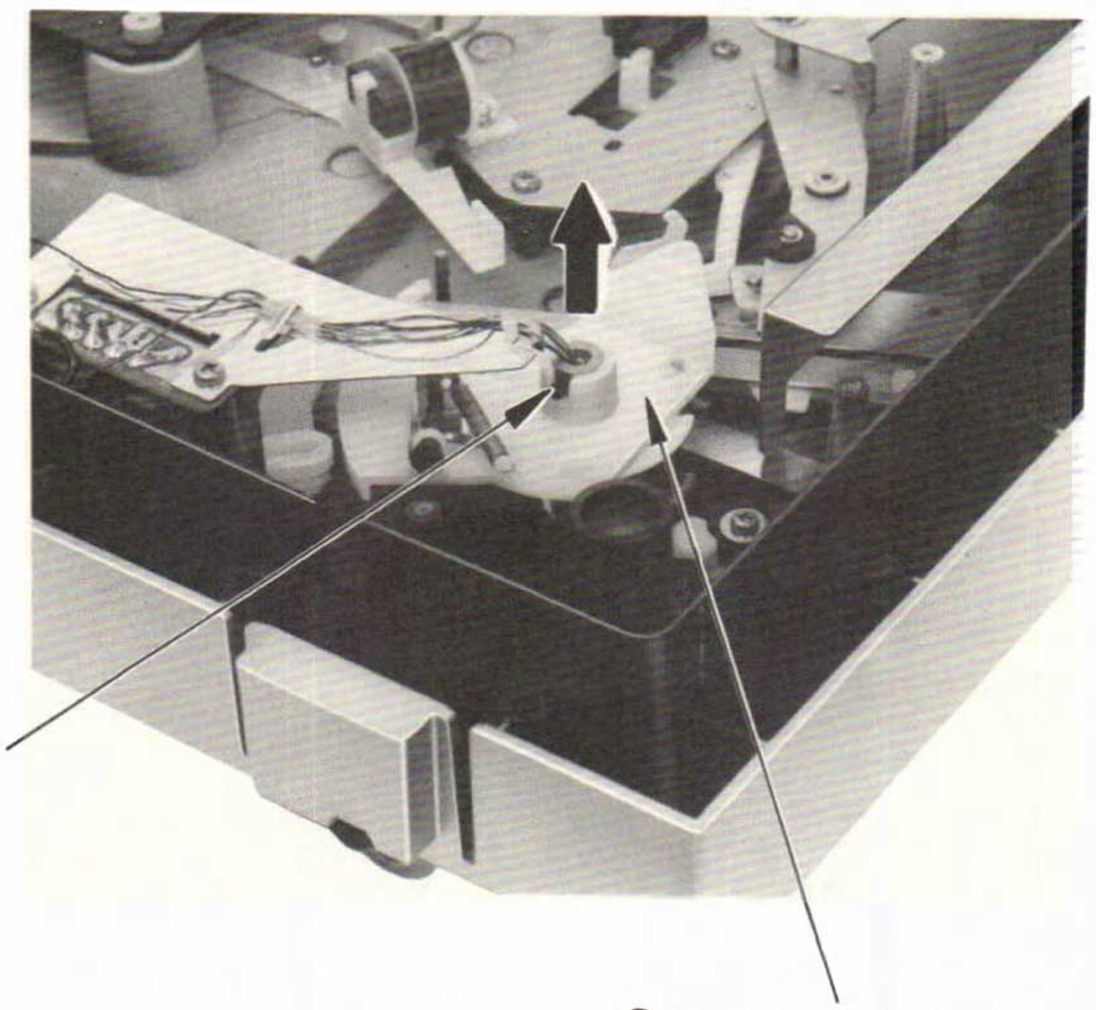

❹ *Loosen the screw (M 3x6). (hexagon socket)*

Use an L-shaped wrench.

1.5 mm

❺ *Pull off the brake drum.*

Fig. 2-7

www.vinylengine.com

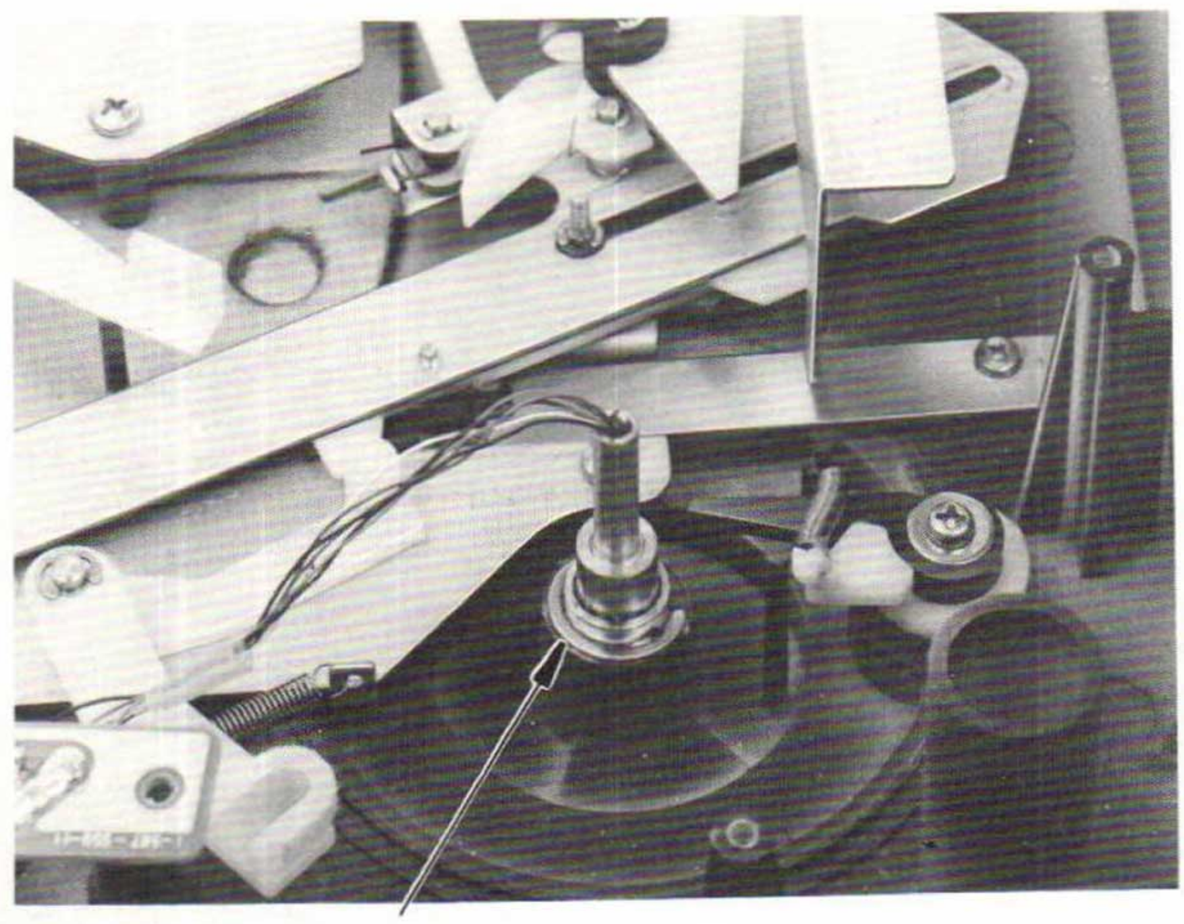

❻ *Remove the E-ring. (12 mm dia.)*

❼ *Strike the tonearm bearing slightly.*

Fig. 2-8

Take out the tonearm.

ARM LIFTER REMOVAL

❶ *Remove the dust cover, the turntable and the bottom board.*

❸ *Remove the brake drum assembly. (Refer to "Tonearm Removal".)*

❺ *Remove the arm lifter lever.*

❹ *E-ring (3 mm dia.)*

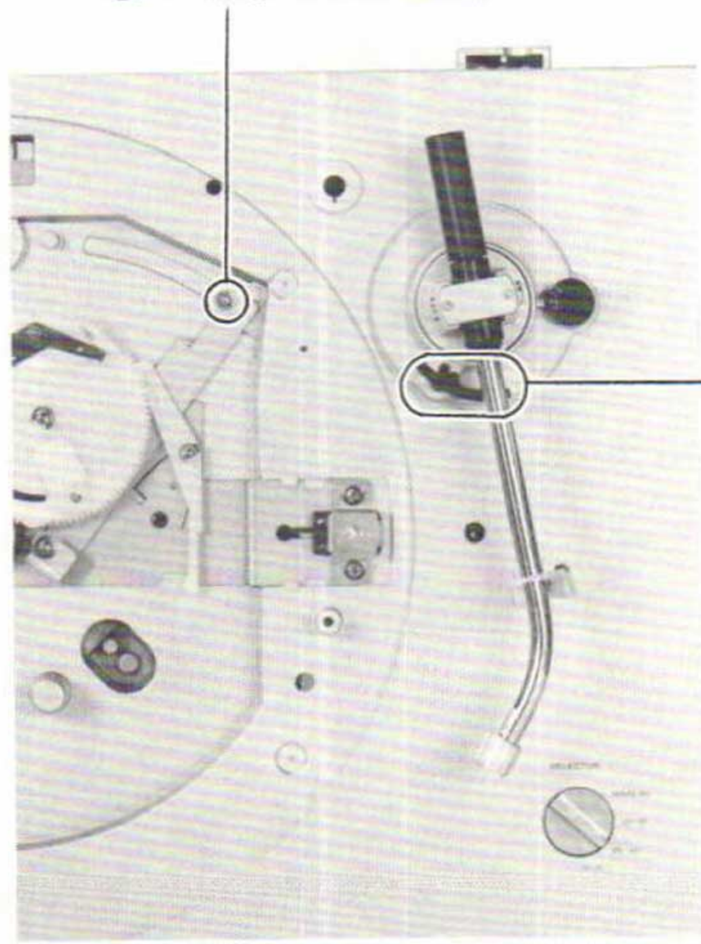

❷ *Remove the arm lifter assembly with an L-shaped wrench.*

(⬡ d = 1.27 mm)

Fig. 2-9

www.vinylengine.com

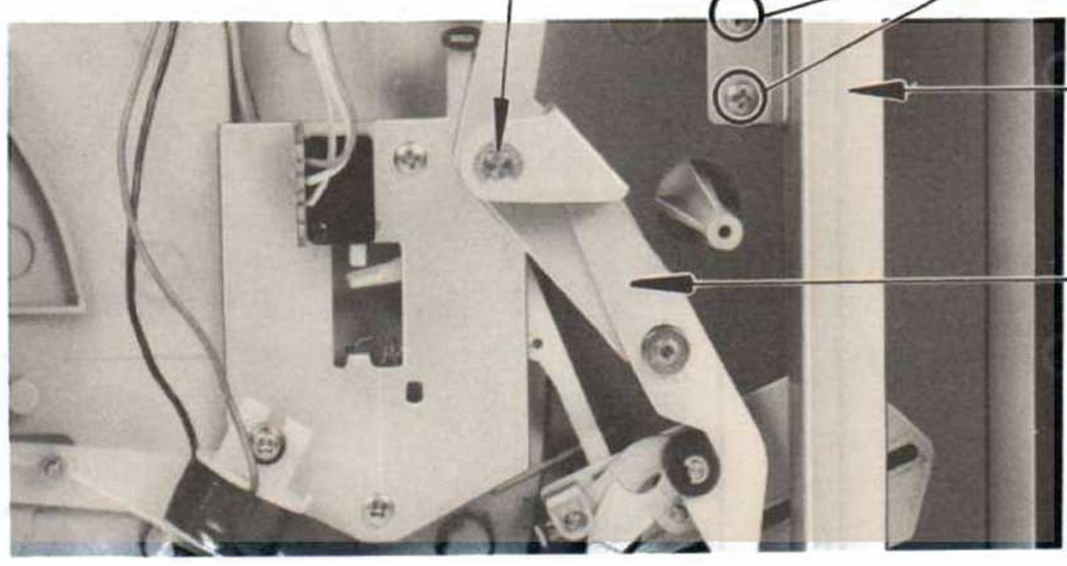

Fig. 2-10

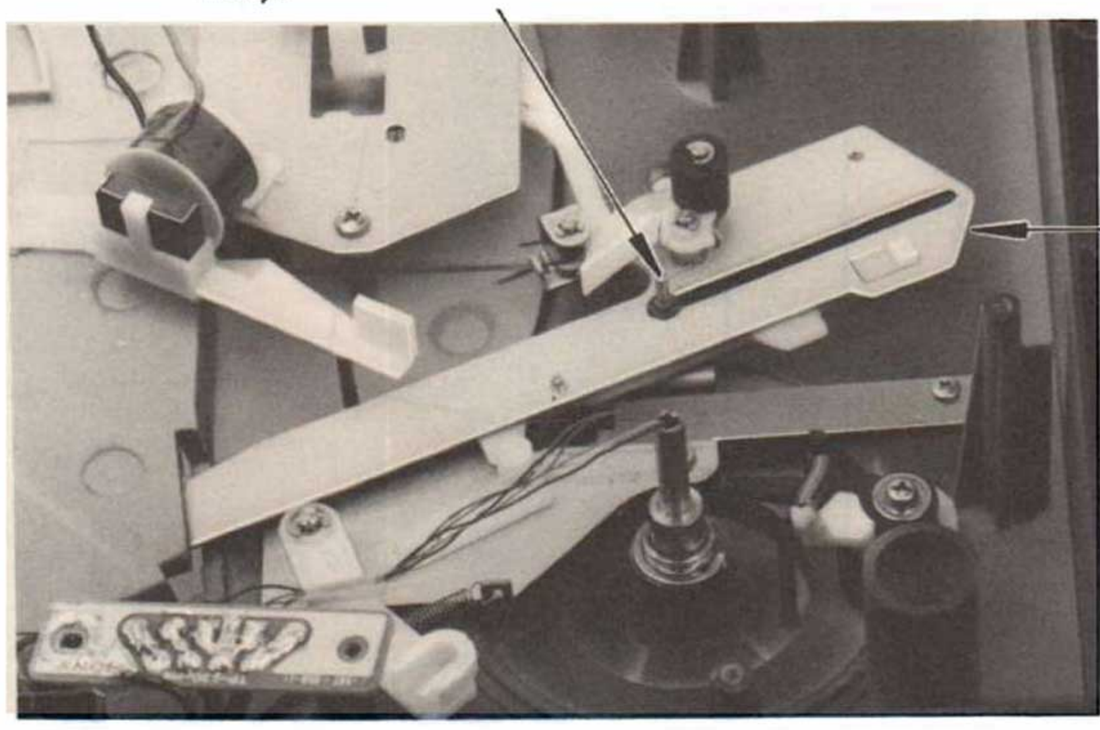

Fig. 2-11

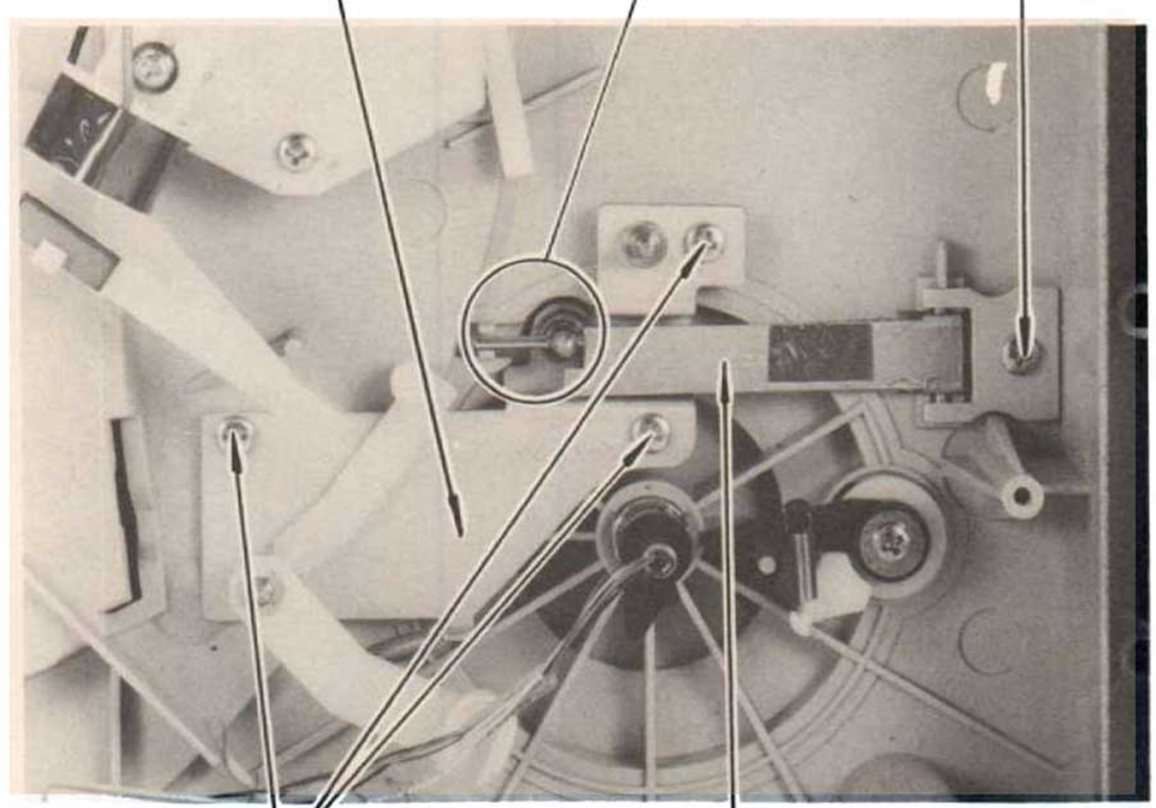

Fig. 2-12

www.vinylengine.com

TONEARM DISASSEMBLY

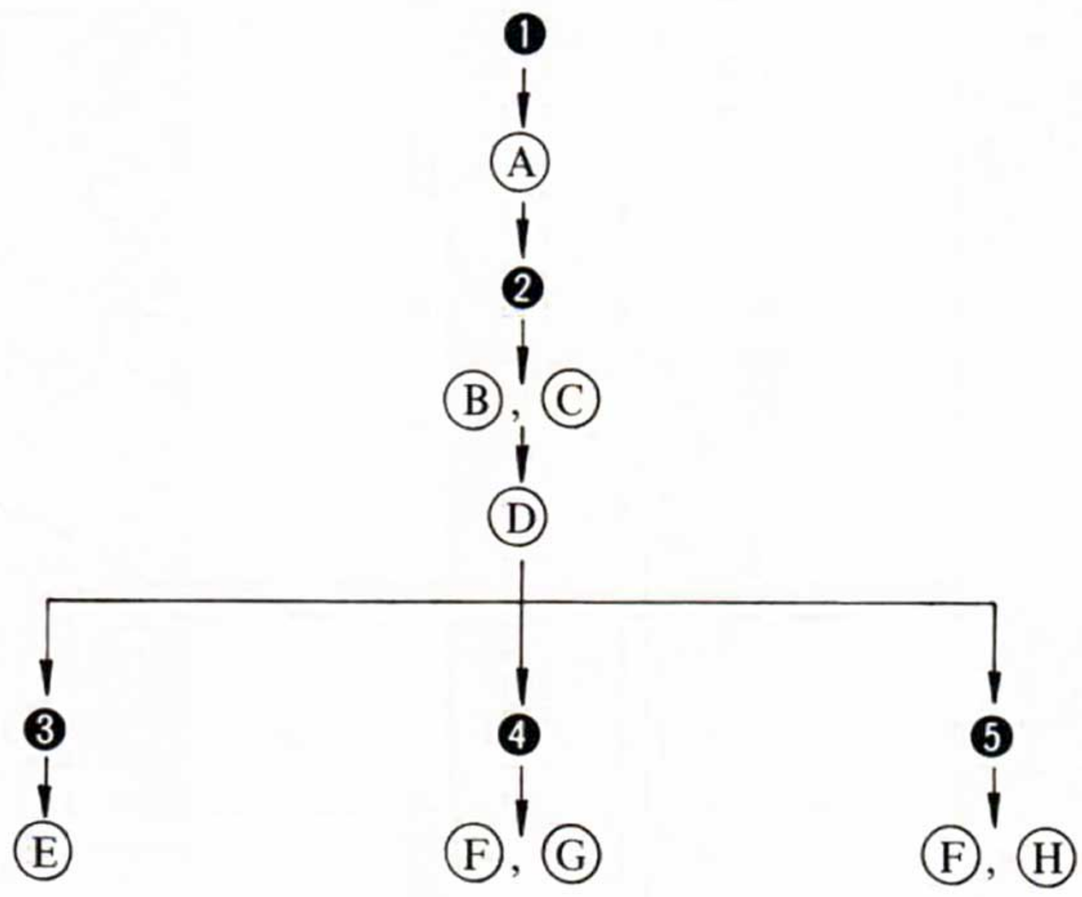

Fig. 2-13

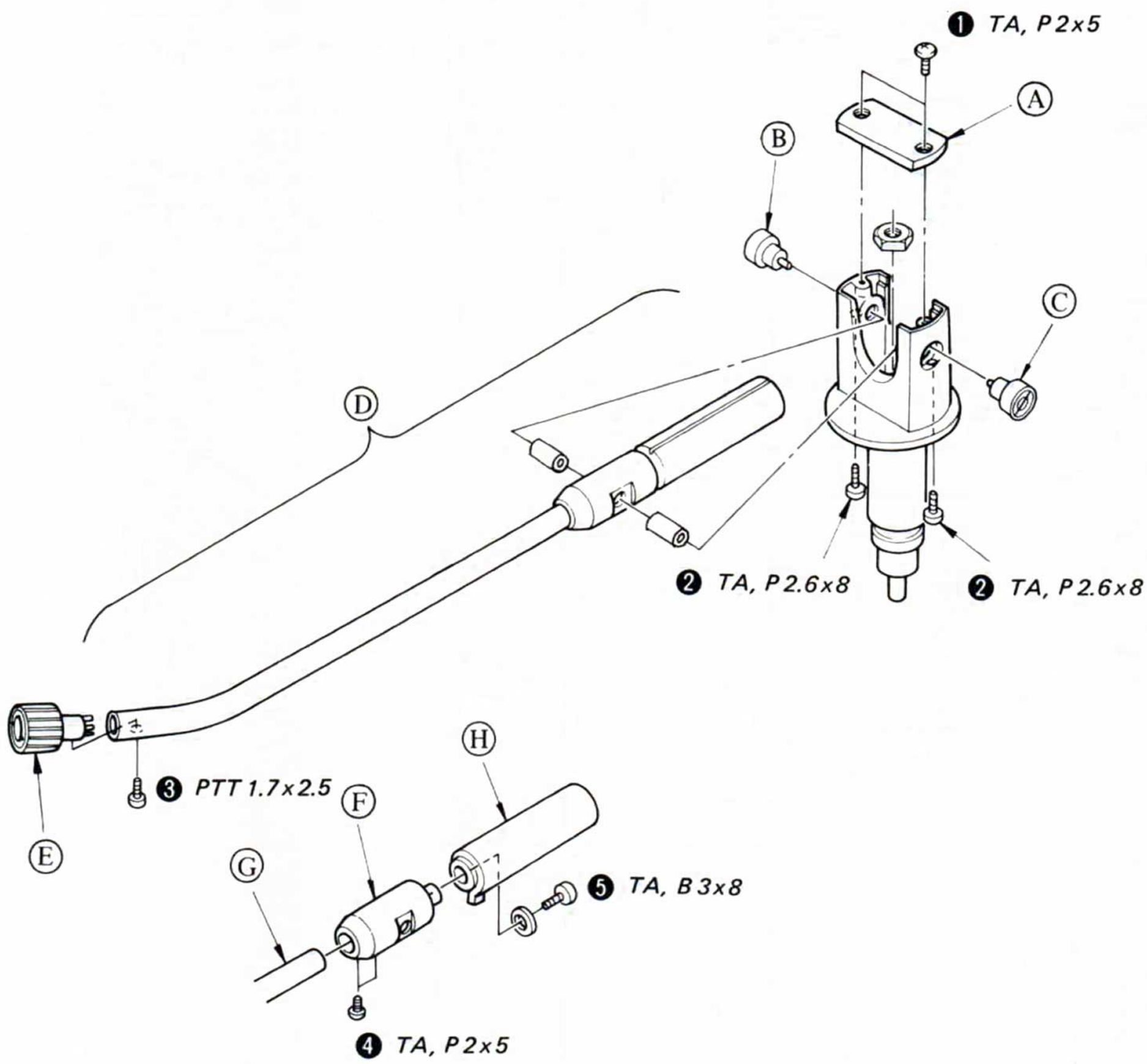

Fig. 2-14

www.vinylengine.com

SECTION 3
ASSEMBLY

3-1. TONEARM ASSEMBLY

Pipe Assembly (1)

1. Thread a wire in Ⓓ.
2. Thread the leads of Ⓖ and hook the leads by the wire.
3. Insert Ⓖ in Ⓓ by pulling the wire in the direction shown by the arrow, align two holes marked *1, *2 and tighten the screw ③.

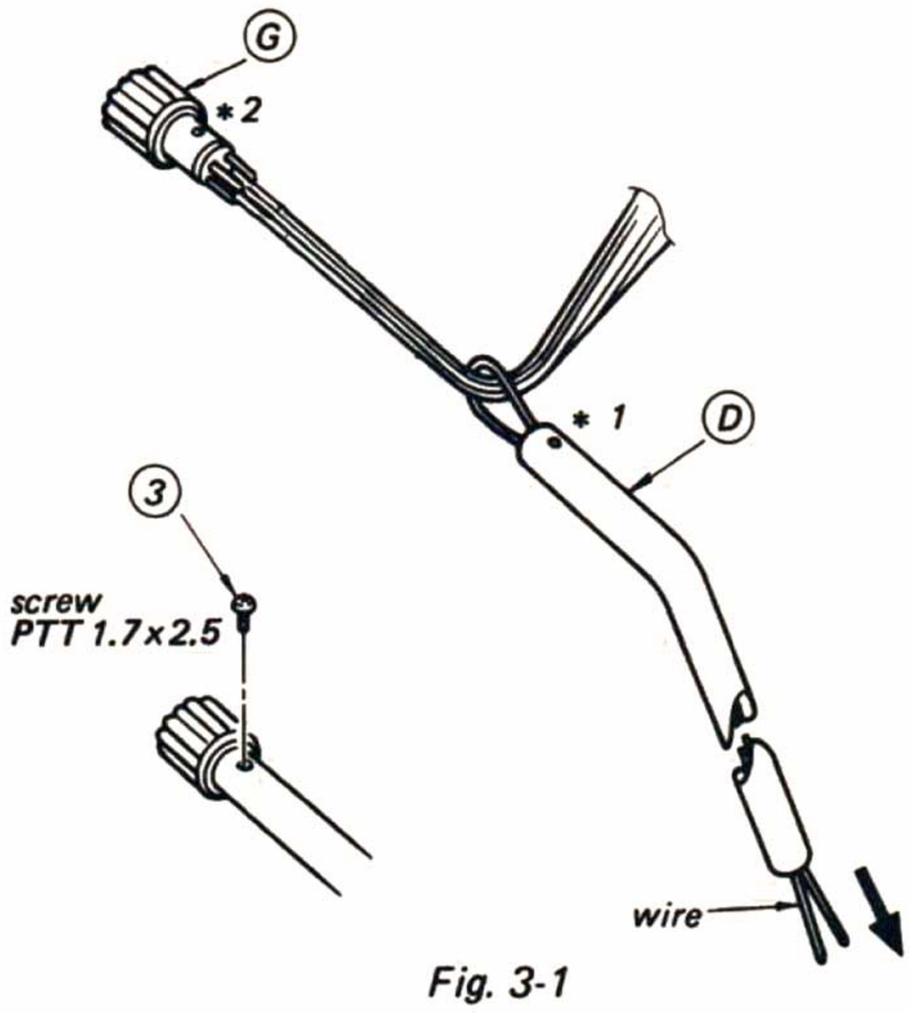

Fig. 3-1

Pipe Assembly (2)

1. Thread a wire in Ⓗ as shown below.
2. Hook one lead of Ⓚ and four leads of Ⓖ to the loop of wire, and pull the wire as shown.
3. Align the holes marked *1, *2, *3 to tighten the screws ④.

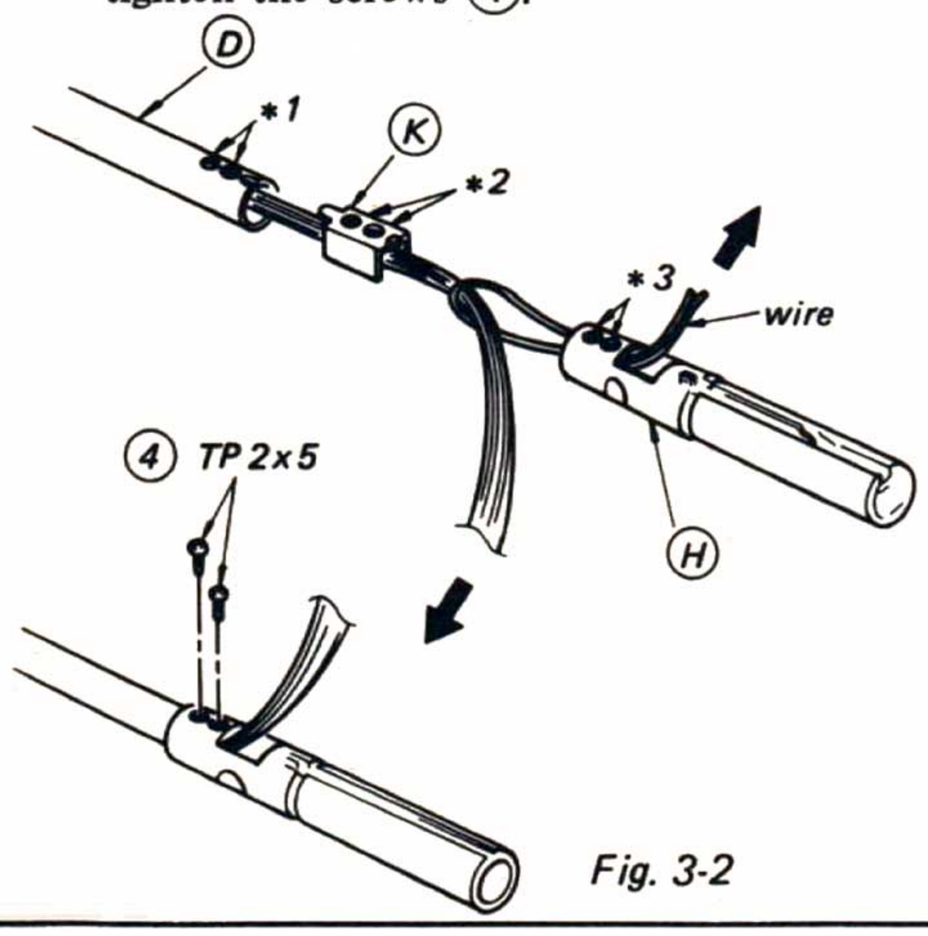

Fig. 3-2

Setting of Pivot (A) and Pivot (B)

Push the pivot (A) and the pivot (B) into the holes of Ⓐ strongly and tighten the screws ②.

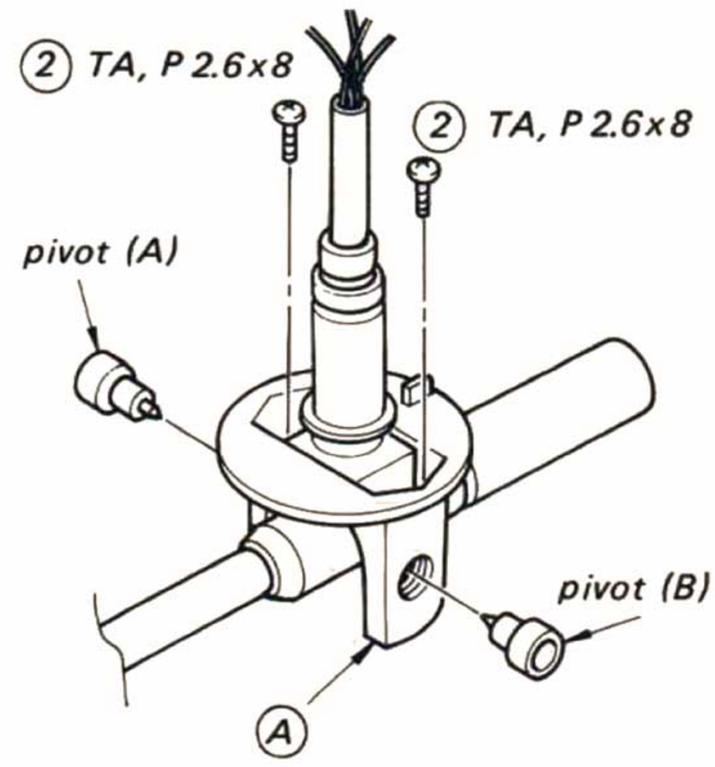

Fig. 3-4

Installation of Pipe Assembly

1. Thread a wire in Ⓖ.
2. Hook the five leads to the loop of wire.
3. Pull the wire in the direction shown by the arrow.

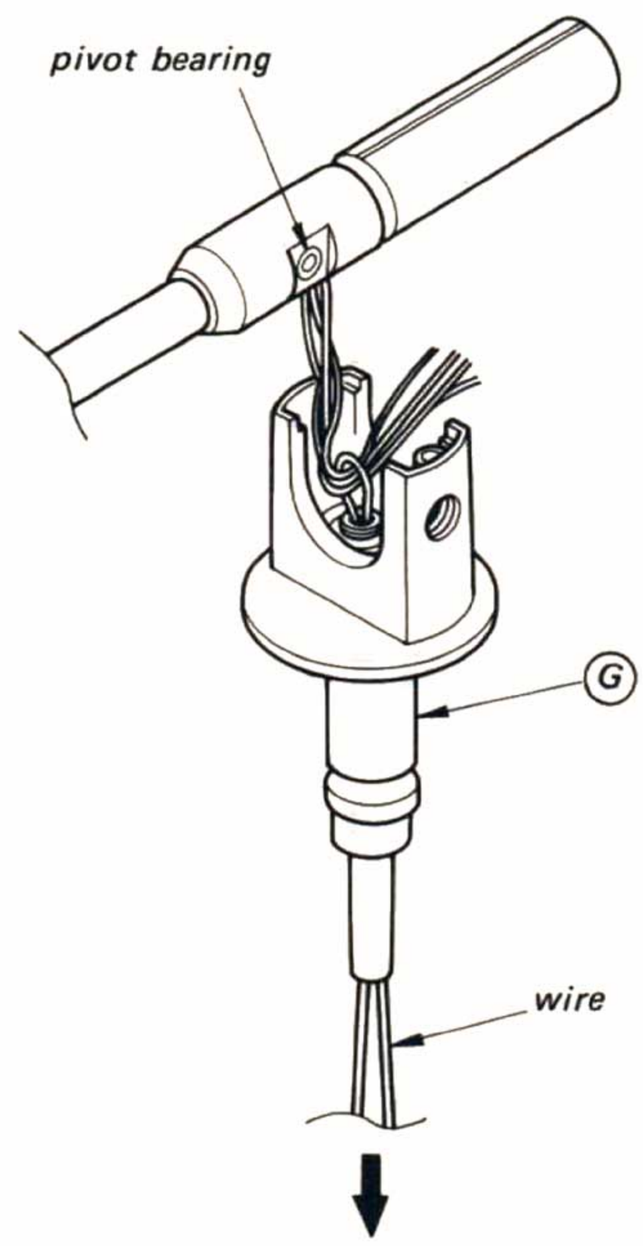

Fig. 3-3

www.vinylengine.com

Setting of Pivot Screw and Lock Nut (A)

1. Adjust the positions of the pivot (A) and the pivot bearing of the center boss to secure the screw ①.
2. Tighten the screw ① and the nut ② temporarily.

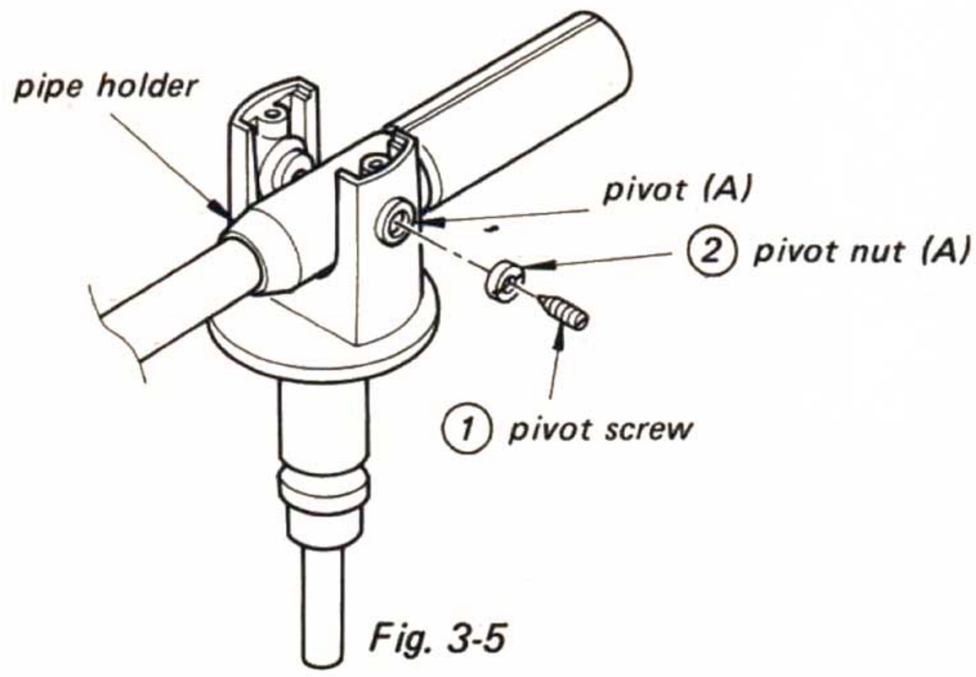

Fig. 3-5

3. Install the head shell (with a cartridge) and the counterweight to the tonearm.
4. Perform the balance adjustment with the screw and the nut, repeating the following procedures.
   a. When the 80 mg weight is placed on the top of the shell (just above a stylus), the tonearm sinks 5 mm (measured at the stylus-tip).
   b. When the weight is removed, the tonearm returns horizontally.

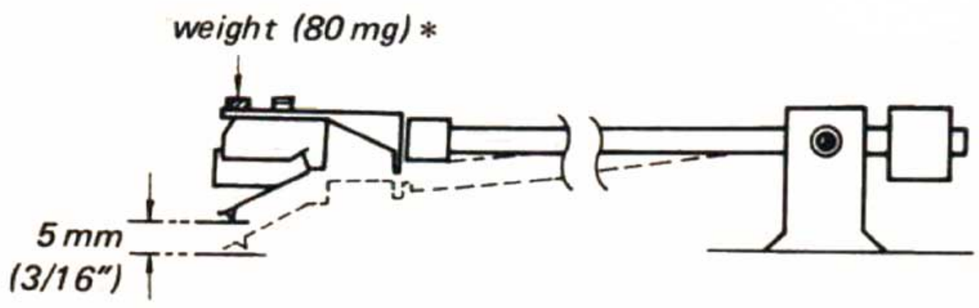

Fig. 3-6

3-2. INSTALLATION OF SOLENOID MAGNET

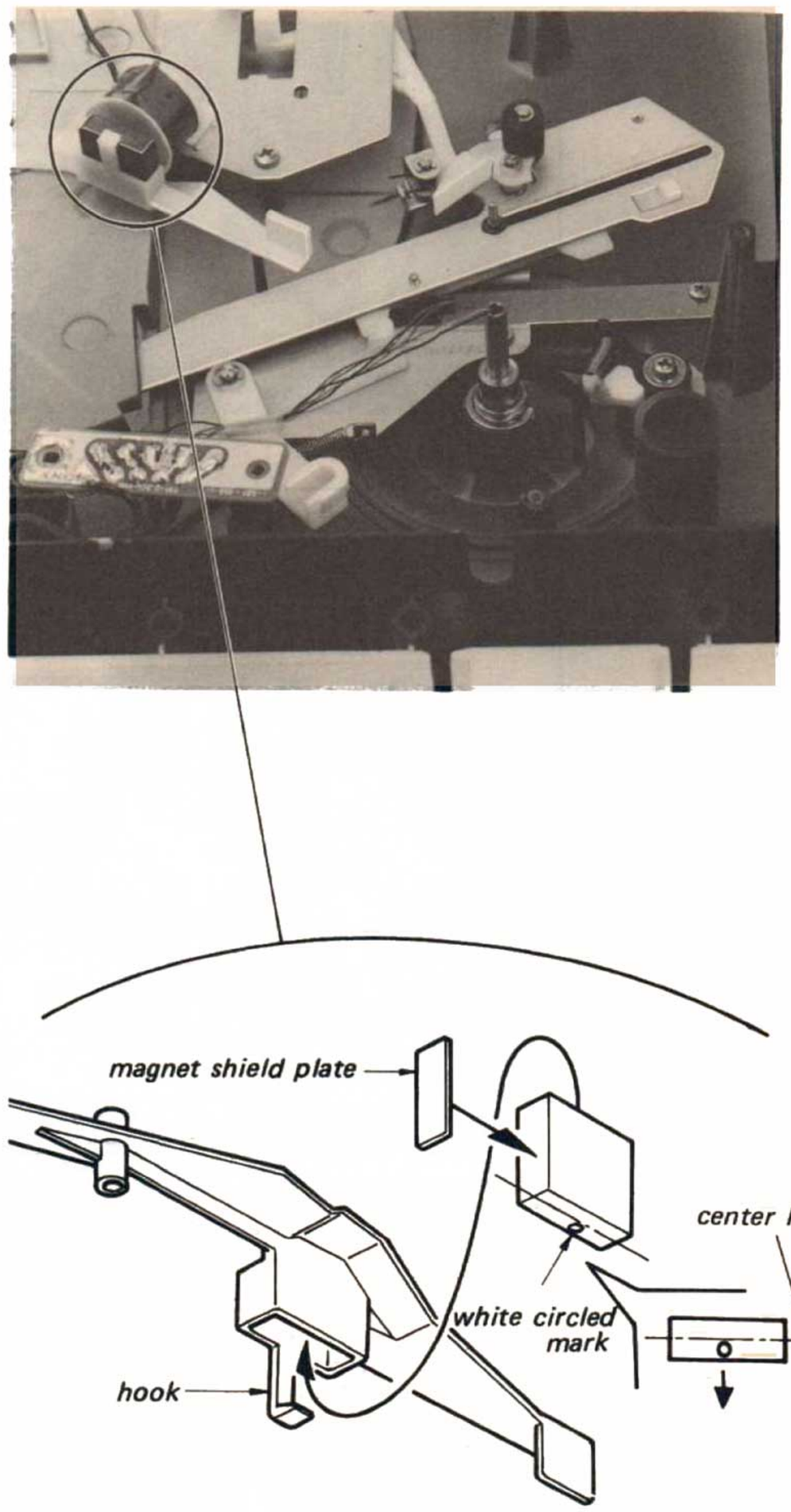

Fig. 3-7

www.vinylengine.com

3-3. ROLLER, SPRING AND RETURN CAM INSTALLATION

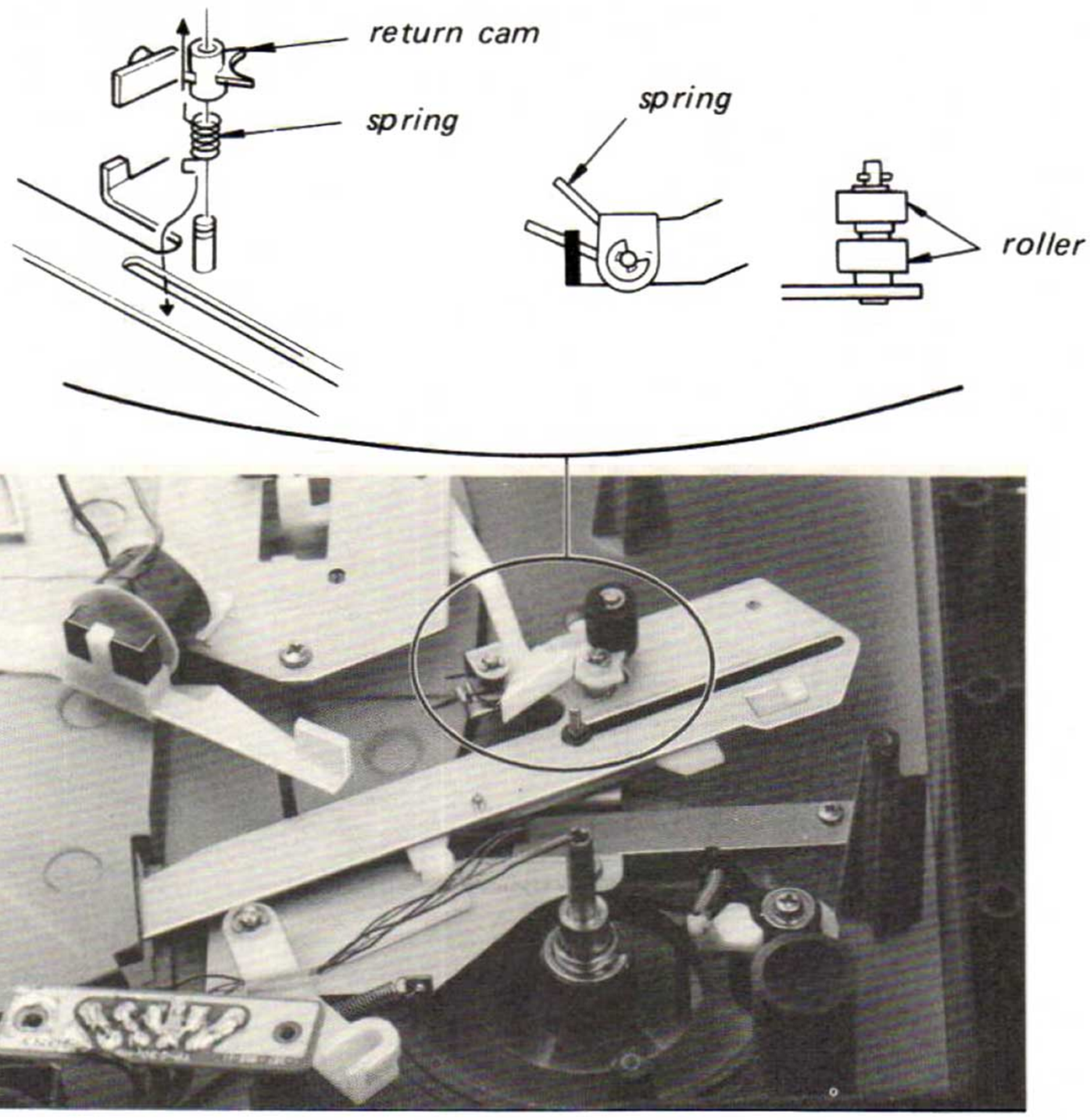

Fig. 3-8

3-4. IFC CAM INSTALLATION

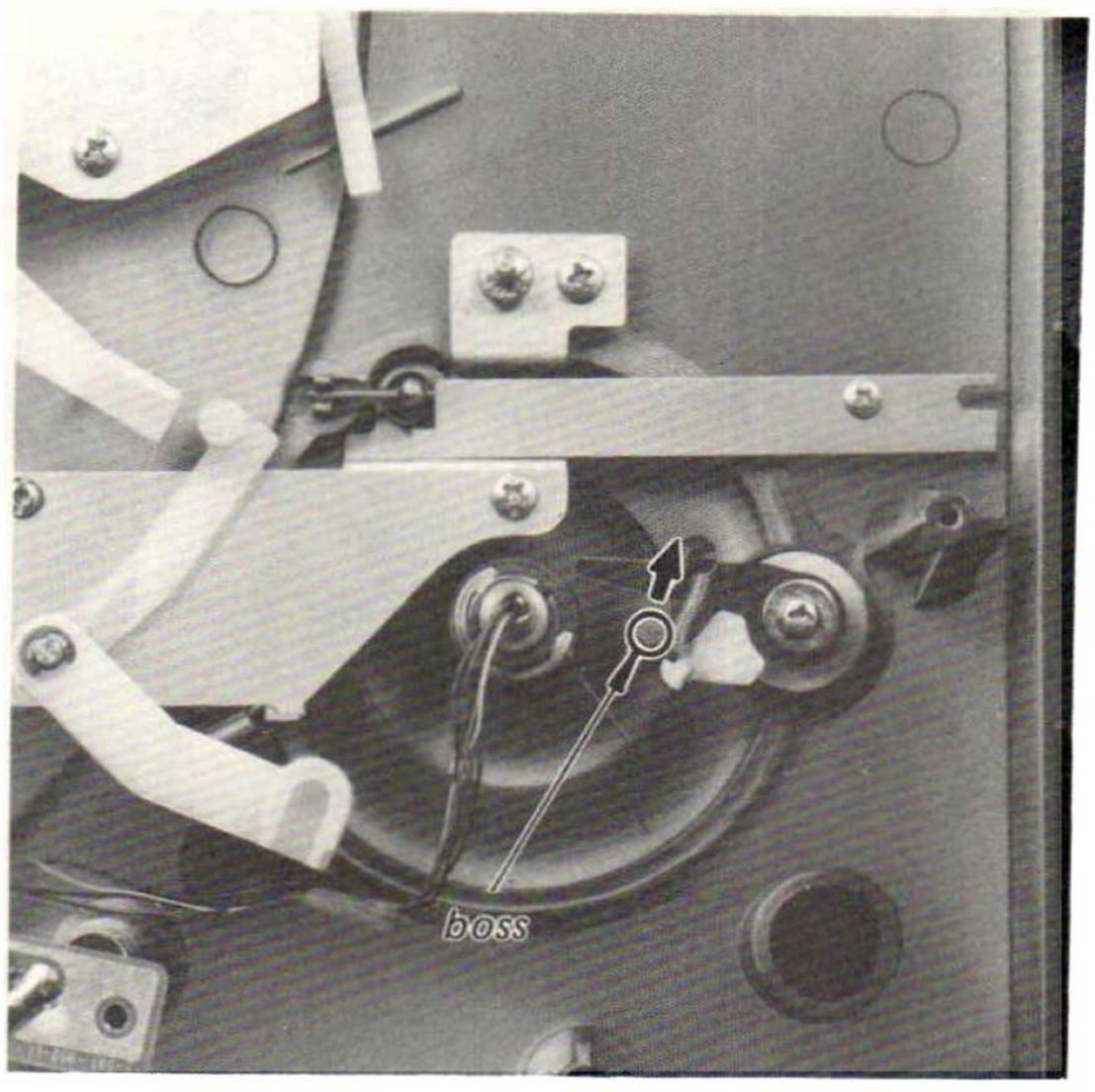

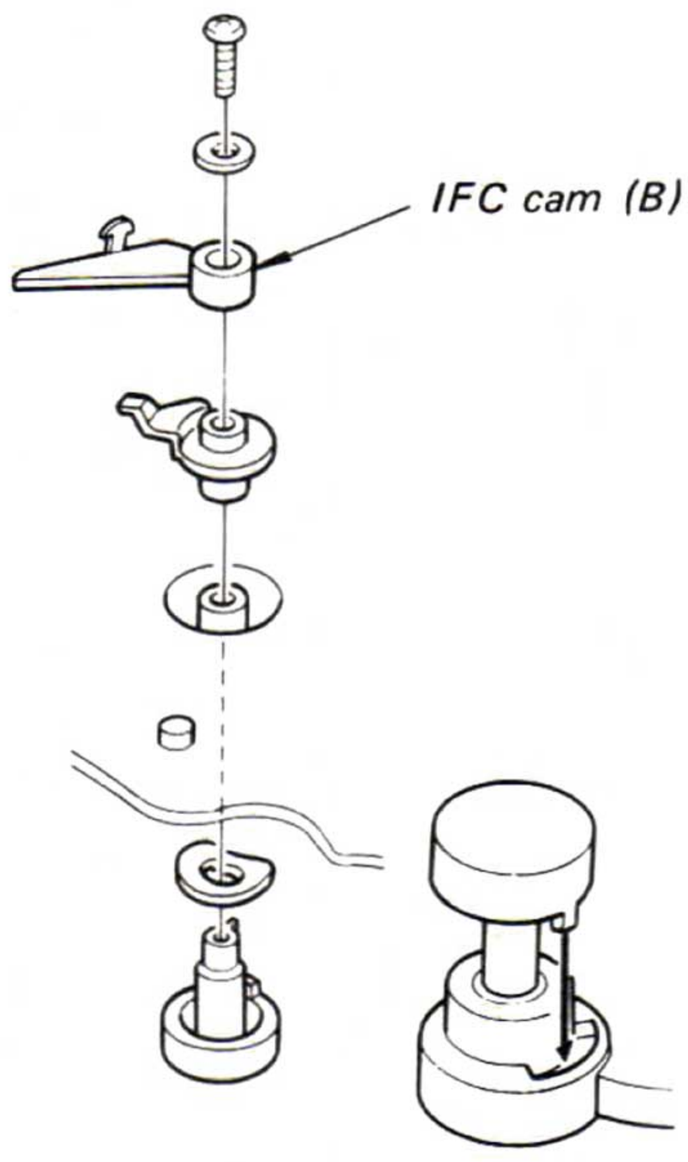

Fig. 3-9

www.vinylengine.com

3-5. SELECTOR CAM INSTALLATION

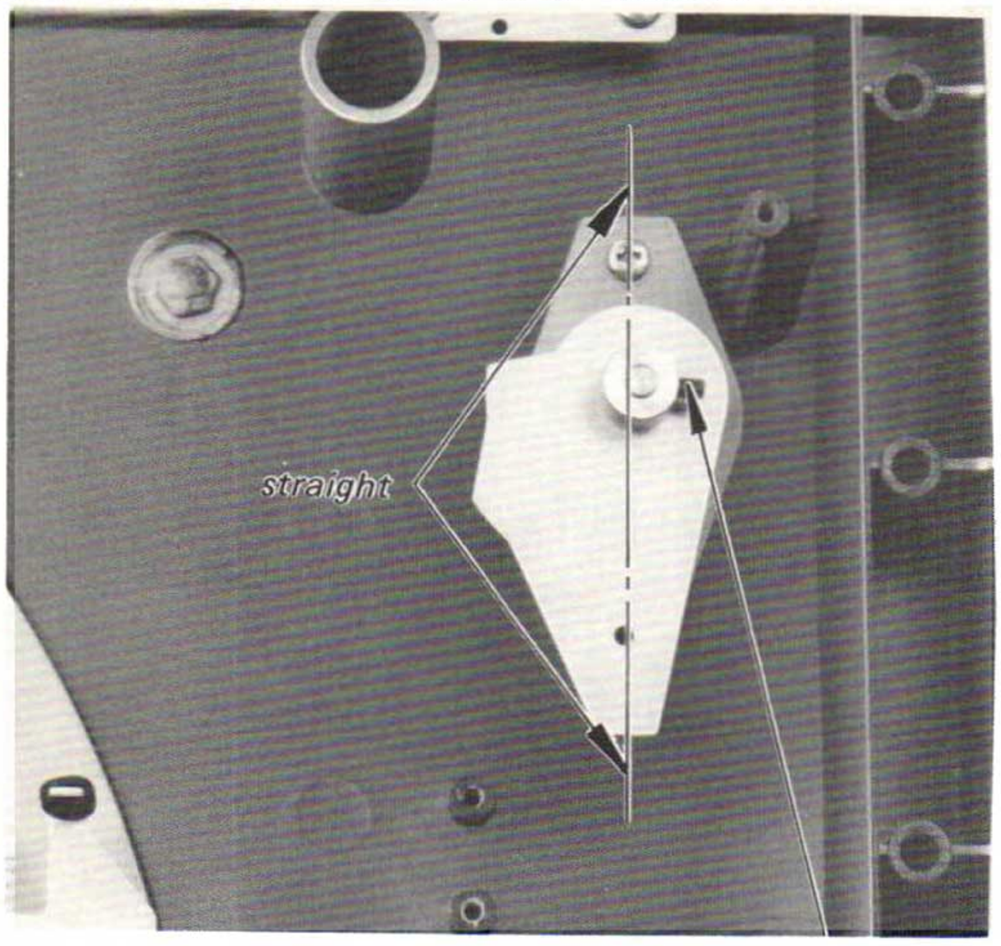

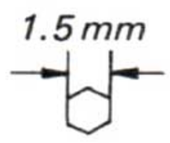

Use an L-shaped wrench.

- Record size selector: 17

Fig. 3-10

3-6. DRIVE GEAR INSTALLATION

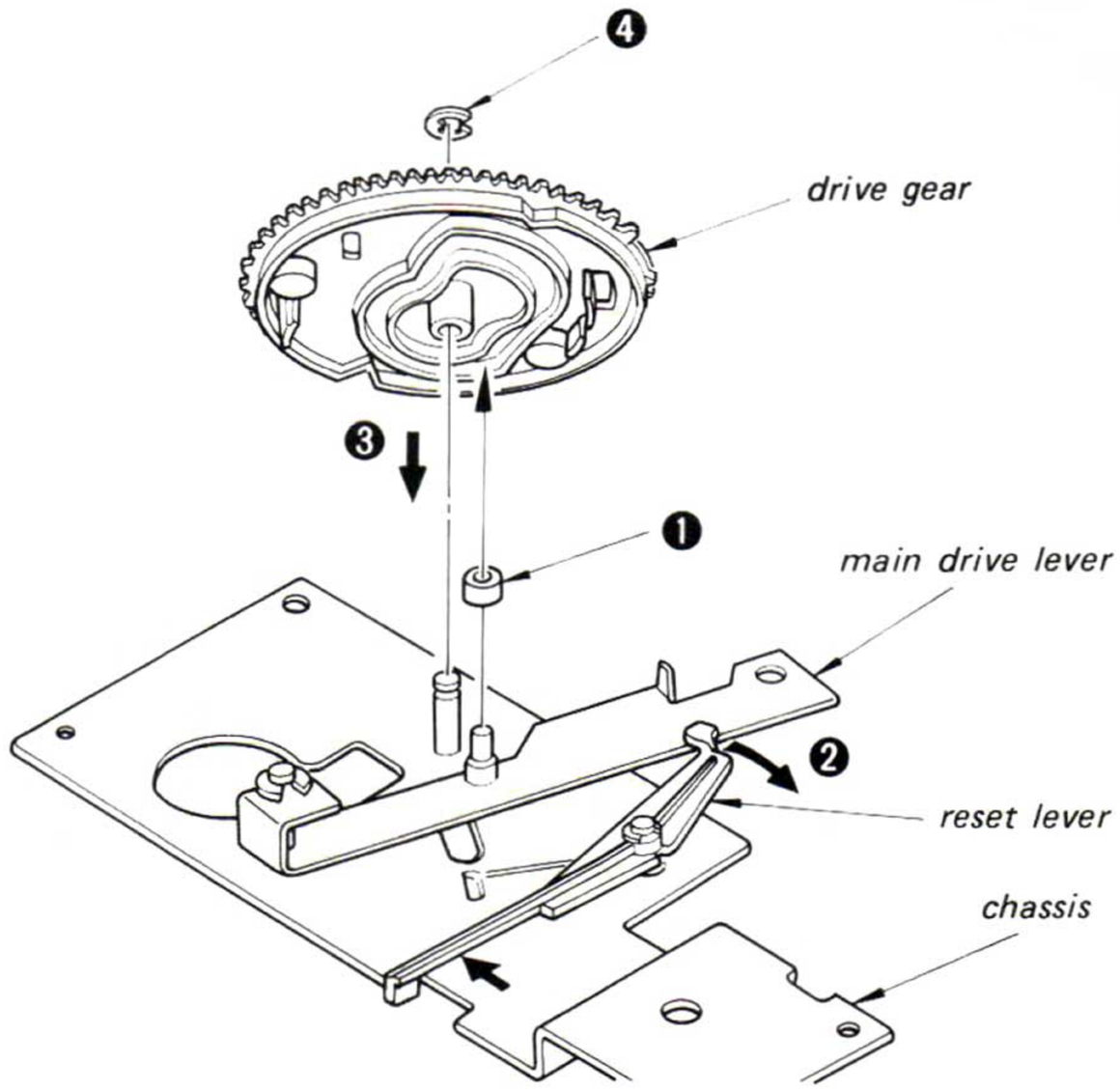

Fig. 3-11

3-7. BRAKE DRUM AND IFC LEVER INSTALLATION

1. When installing ❶, refer to Fig. A and Fig. B.
2. Before installing ❷ to the shaft, perform ❸ and ❹.

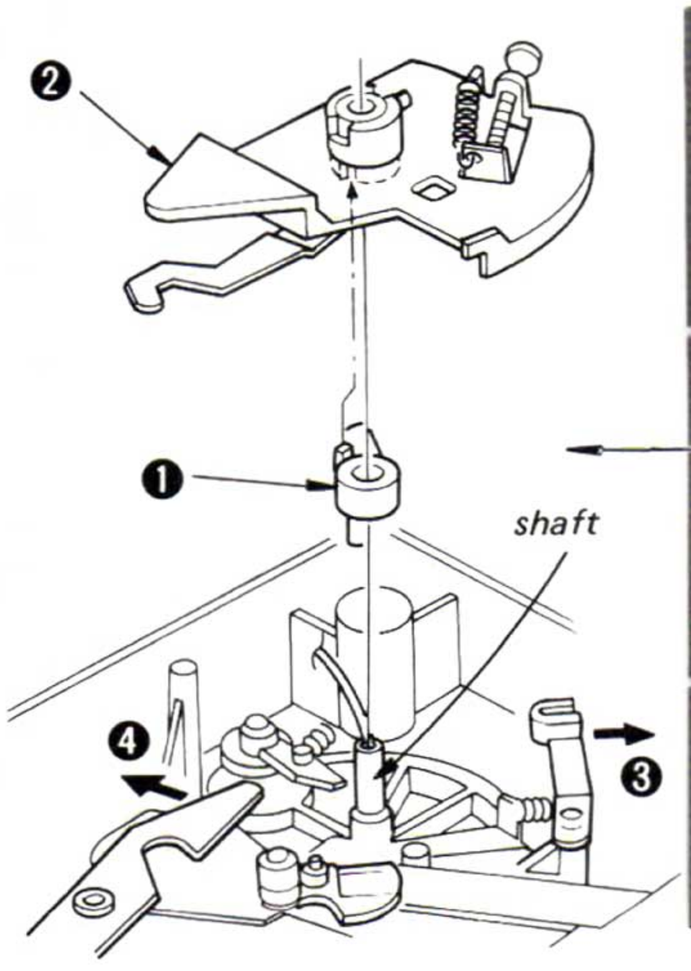

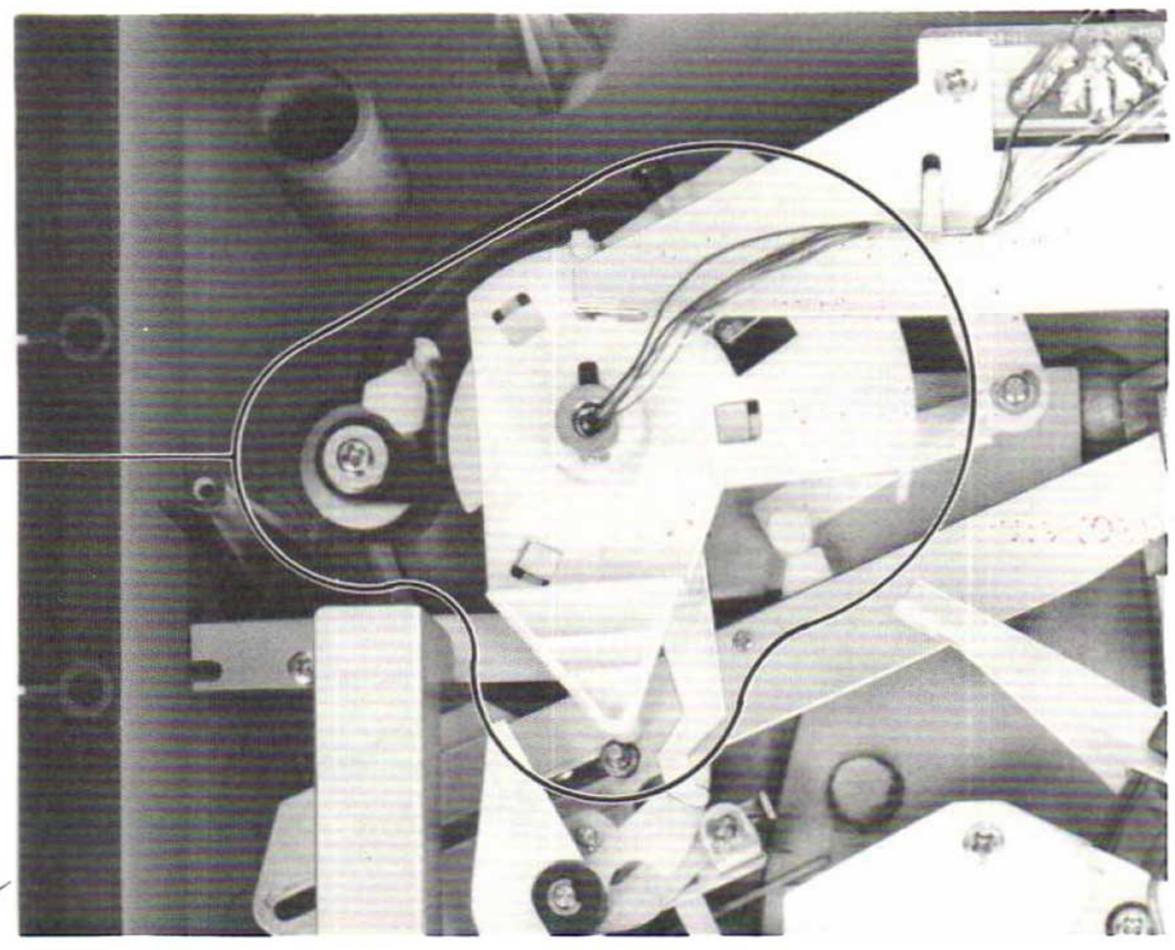

Fig. 3-12

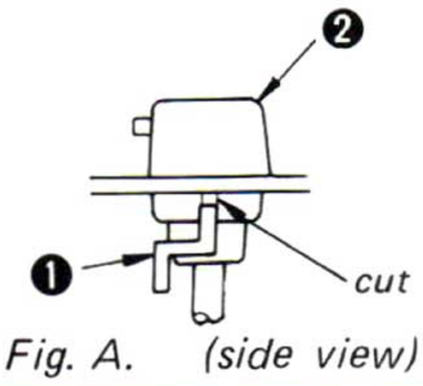

Fig. A. (side view)

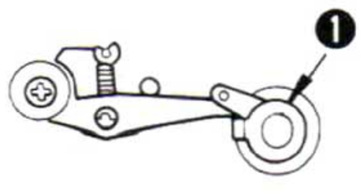

Fig. B. (top view)

www.vinylengine.com

SECTION 4
LUBRICATION AND CARTRIDGE REPLACEMENT

4-1. LUBRICATION

Drive Gear

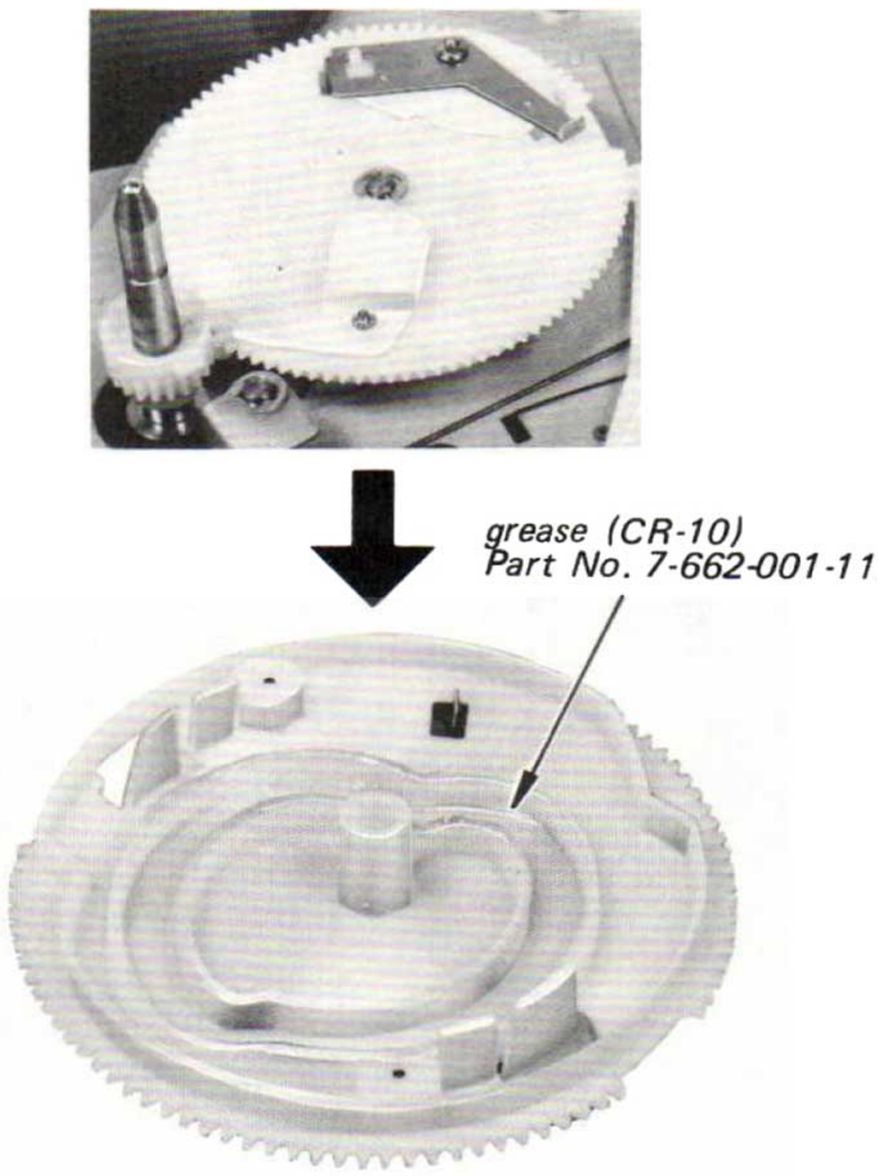

Fig. 4-1

Arm Lifter

Apply silicone-oil to the shaded portion ▨.

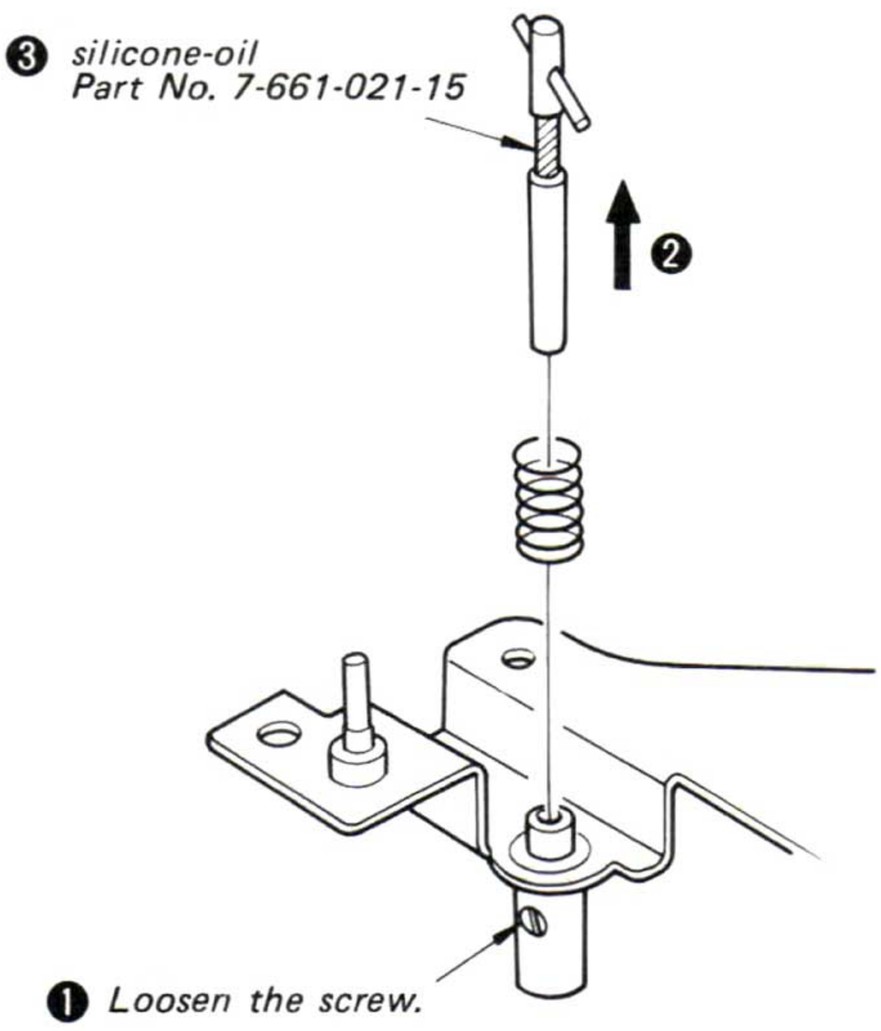

Fig. 4-2

4-2. CARTRIDGE REPLACEMENT

Position Adjustment

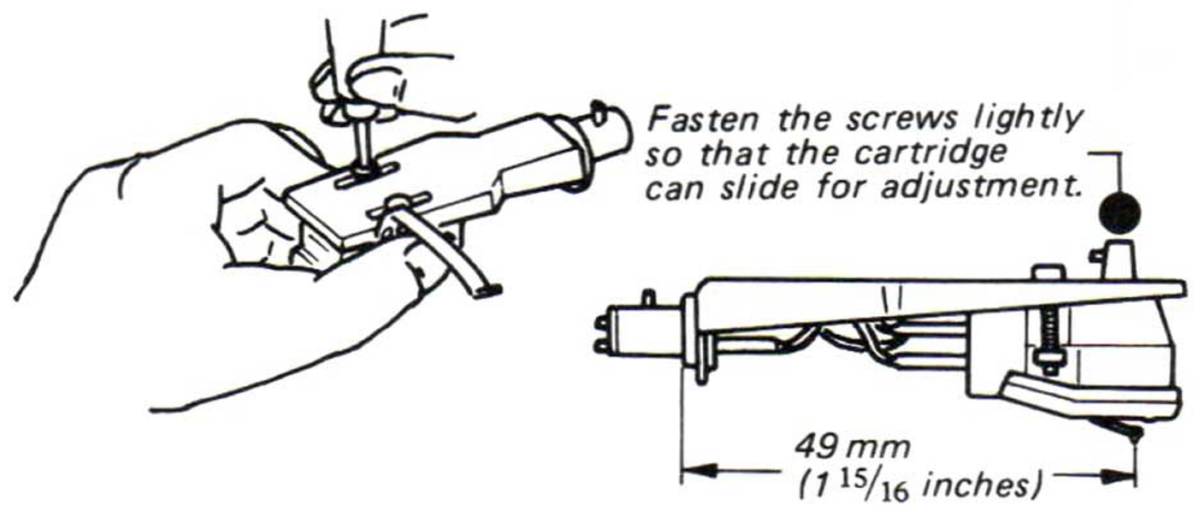

Fig. 4-3

Wiring

Wires	Cartridge pins
White	L (left channel signal)
Blue	LE or G (left channel ground)
Red	R (right channel signal)
Green	RE or G (right channel ground)

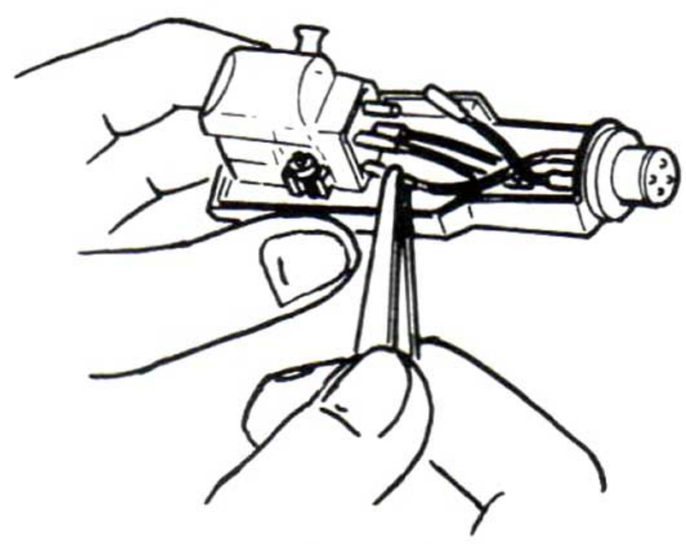

Fig. 4-4

www.vinylengine.com

SECTION 5
MOTOR REPAIRING

The motor and the servo amp board are assembled together. If found defective, disassemble the motor block as shown in Fig. 5-1 and repair it.

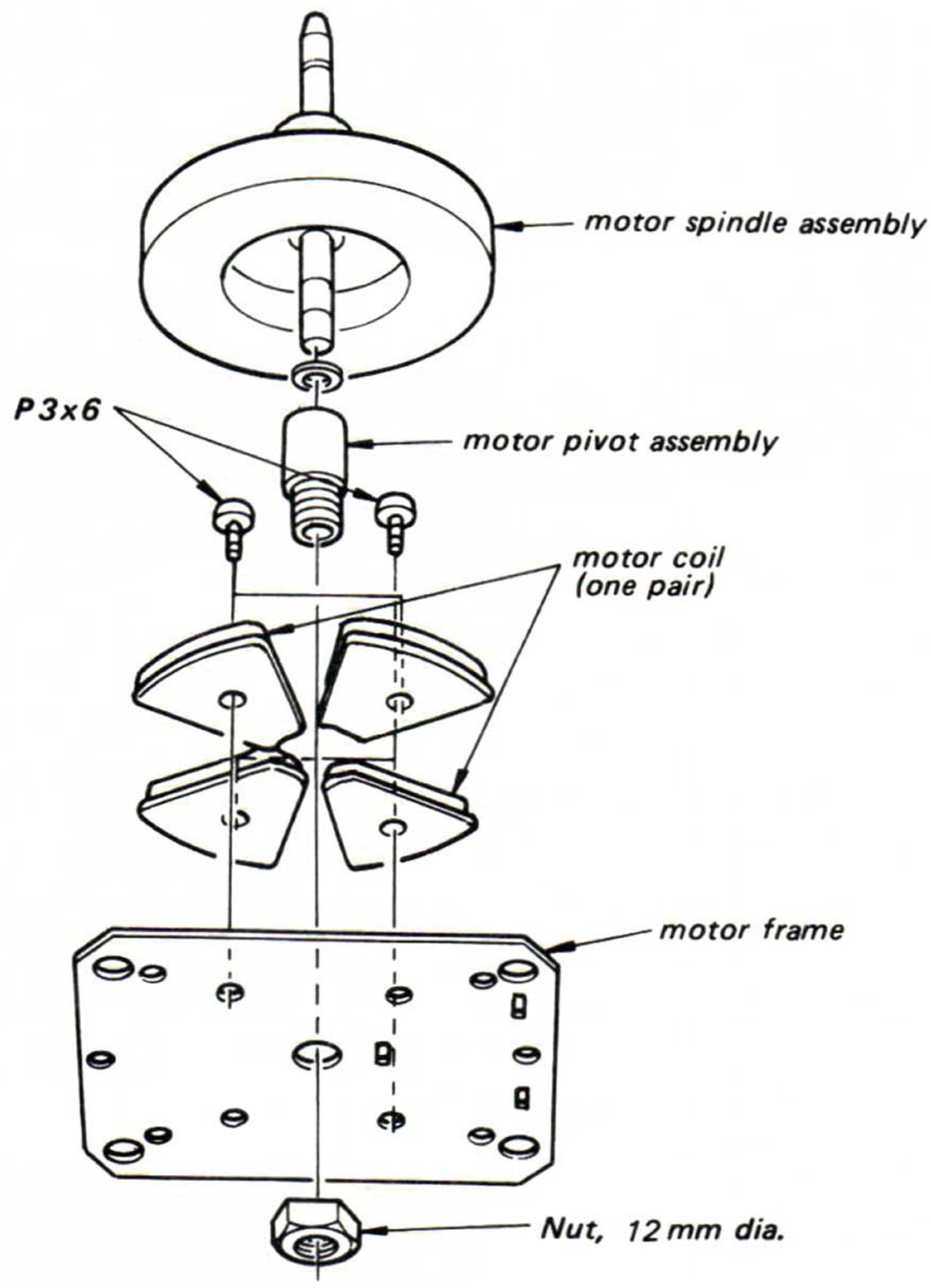

Fig. 5-1

1. When the motor shaft is replaced, apply a small amount of grease (CR-10) in the pivot and apply SONY oil (OL-2KA) to the portion marked by * in Fig. 5-2.

2. When the motor pivot assembly is replaced, apply a small amount of grease (CR-10) in the pivot.

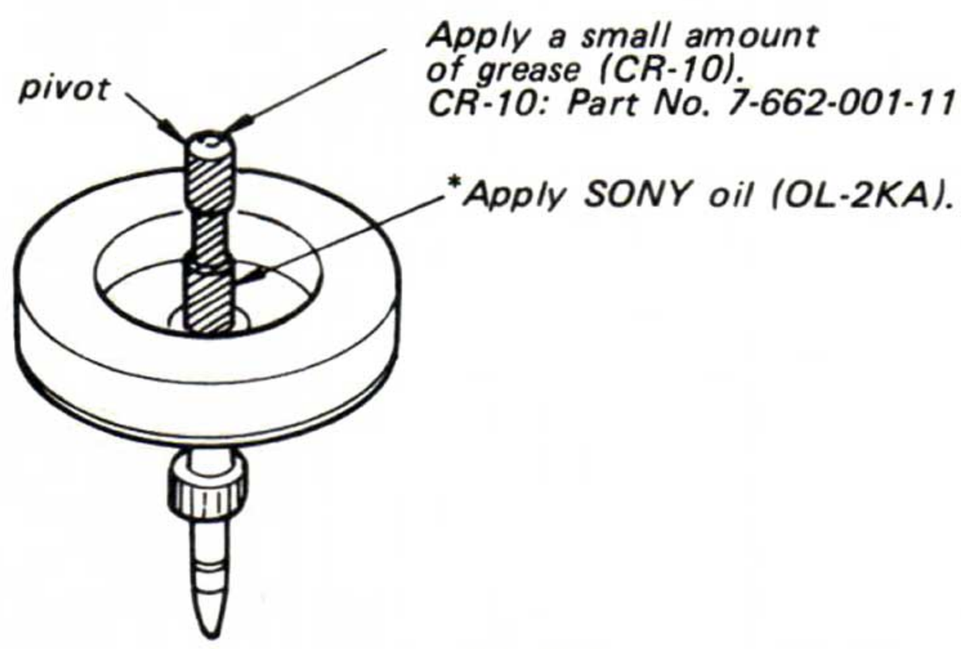

Fig. 5-2

www.vinylengine.com

3. Insert the motor spindle assembly slowly in the motor pivot assembly so that the motor shaft is not attracted by strong magnetic field strength.
4. The motor coils are composed of two pairs.
   a. Mount the coils on the motor frame so that the boss of the coil is placed in the hole of the frame as illustrated in Fig. 5-3.
   b. Lay the leads of the coils as shown in Fig. 5-4 and fix the leads in the slot marked by * in Fig. 5-5.

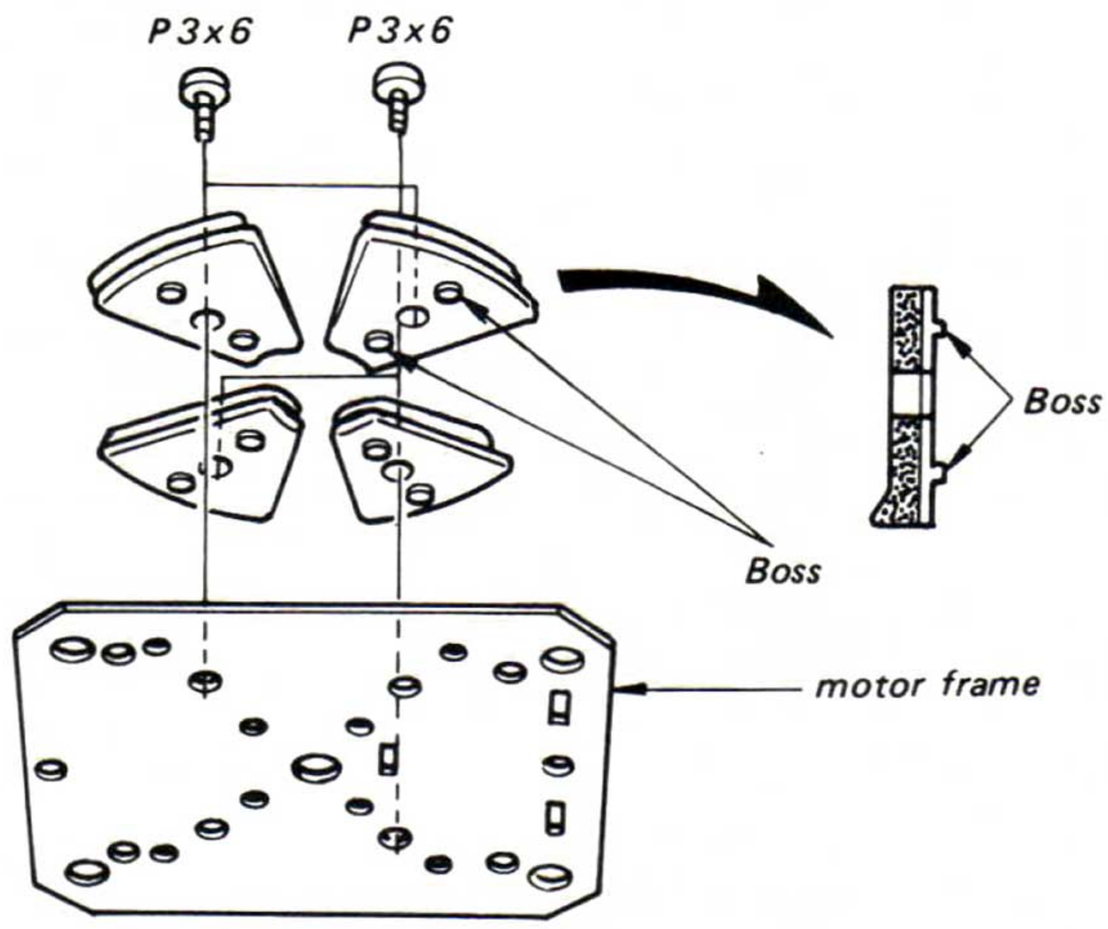

Fig. 5-3

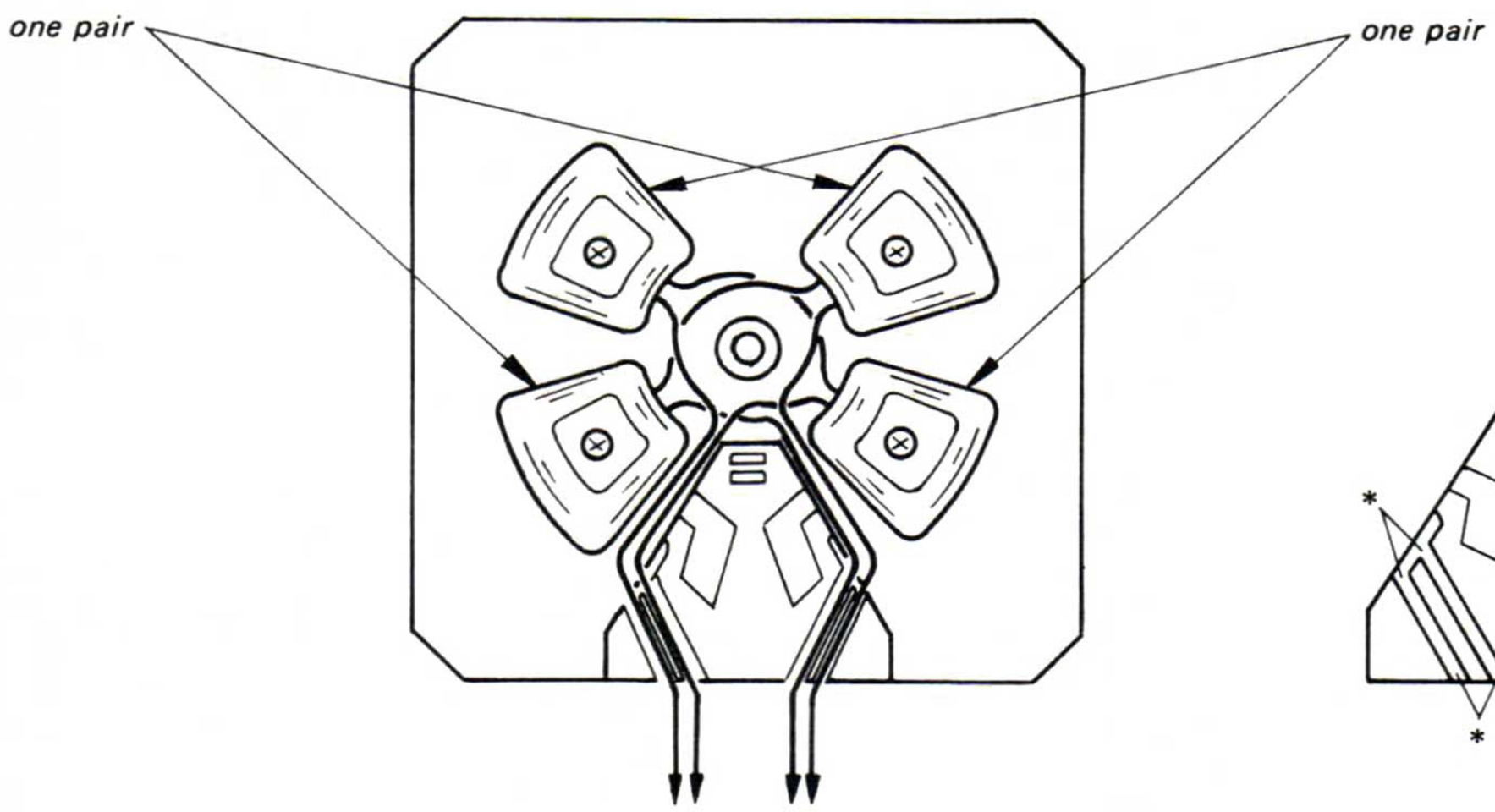

Fig. 5-4

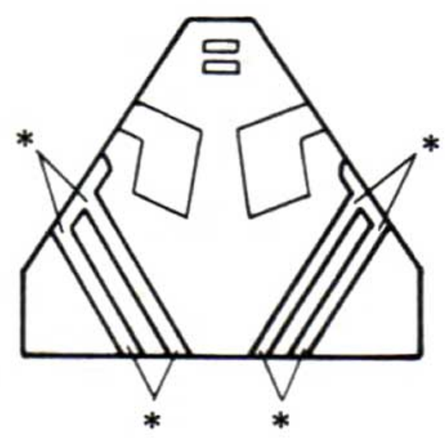

Fig. 5-5

www.vinylengine.com

SECTION 6
ADJUSTMENTS

6-1. MECHANICAL ADJUSTMENTS

Stylus Drop-point Adjustment

- Stylus force: 1.7 g

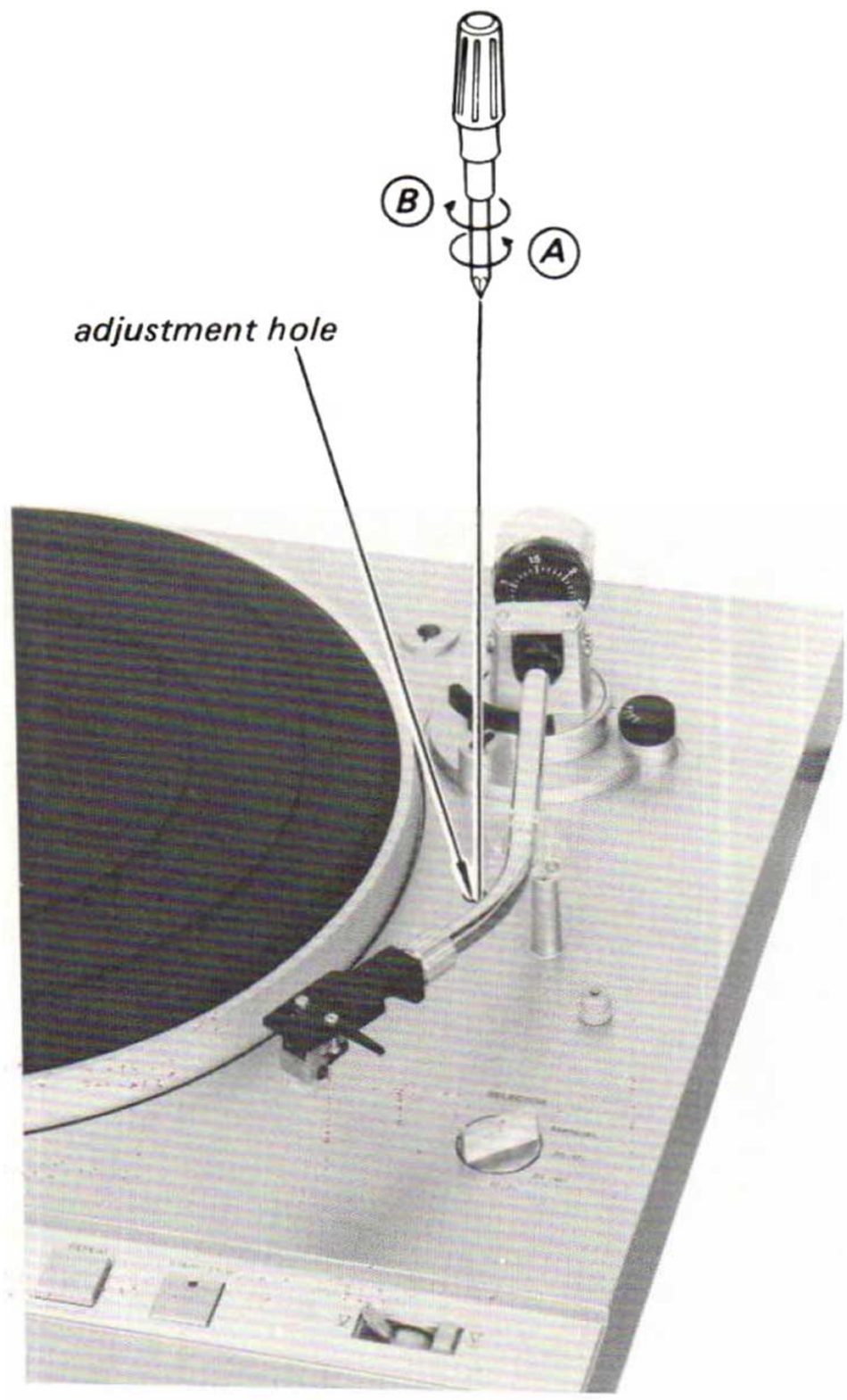

Fig. 6-1

1. Set the record size selector lever to the 30 (12") position and make sure that the stylus gets down on the specified point of the test record.

   test record: YFSC-16

Record size selector lever position	Count of drop-point
30 (12")	4 to 16
25 (10")	6 to 24
17 (7")	7 to 25

2. If necessary, insert the screwdriver into the hole and adjust the drop-point by turning the adjustment screw.

   To change the drop-point outward:
   Turn the adjustment screw slightly counterclockwise (A).

   To change the drop-point inward:
   Turn the adjustment screw slightly clockwise (B).

Note: The stylus drop-point is changed about 12 mm (½") by one turn of the adjustment screw.

Head Shell Angle Adjustment

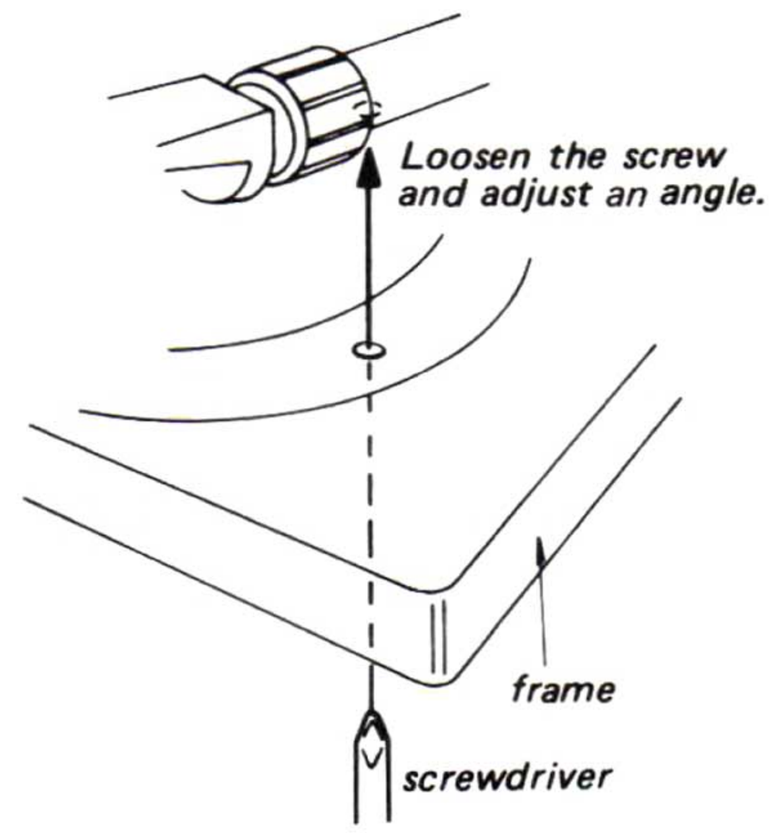

Fig. 6-2

Tonearm Height Adjustment

[At automatic operation]

Adjust the height of arm lifter by loosening the hexagon socket set screw so that the distance between the lead-in groove and lead-out groove of record and the stylus is 4–12mm with the stylus force of 1.7g.

[At manual operation]

1. Turn on the power switch and set the player in PLAY mode.
2. When the lifter lever is set to UP position, adjust the set screw (*) so that the distance between the stylus and the record is 4–12 mm.

Screw setting	Height of stylus
clockwise	down
counterclockwise	up

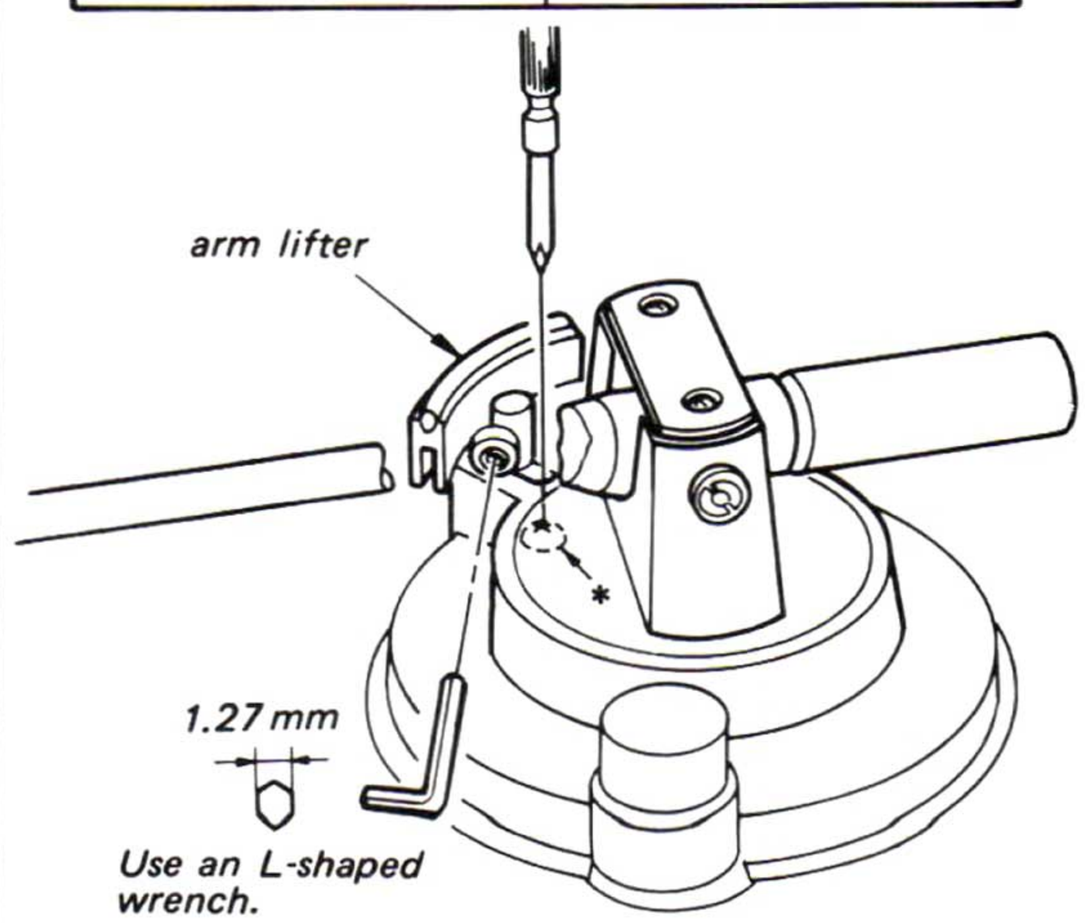

Fig. 6-3

www.vinylengine.com

6-2. ELECTRICAL ADJUSTMENTS

Speed Detecting Head Output Level Adjustment (33⅓ rpm)

1. Remove the bottom board and connect a VTVM between the output terminals (terminals ③ and ④ of the motor circuit).
2. Adjust the head position by moving it back and forth until the VTVM reading is between 15 and 50mVac at 33⅓rpm when the turntable is rotating. Make sure that the head does not touch the turntable.

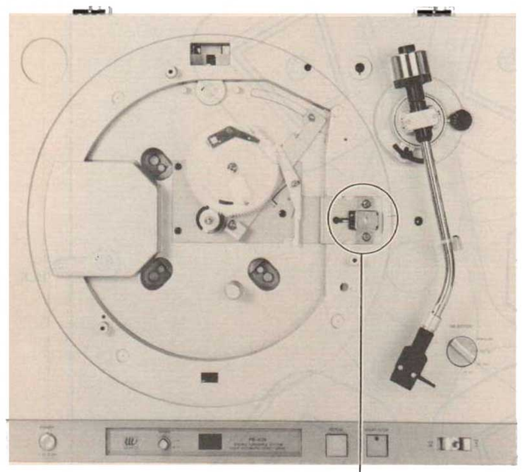

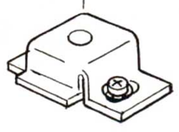

Loosen the screw then slide back and forth.

Speed Adjustment

1. Remove the bottom board.
2. Connect a VTVM or an oscilloscope between terminals ⑥ and ⑦ of the motor circuit.
3. Set to 33⅓rpm.
4. Adjust RV101 for 2.8V dc reading.

Gain/Offset Adjustment

1. Remove the bottom board.
2. Connect a 150kΩ resistor between terminal ⑤ (B+) of the motor circuit and terminal ⑤ of IC102.
3. Connect an oscilloscope between the emitter of Q104/Q107 and the ground.
4. Turn the POWER switch ON.
5. Set to the STOP mode.
6. Remove the turntable and make sure that the motor gear does not engage the pawl of the drive gear.
7. Gain adjustment: Adjust RV103 (switch on H1) and RV102 (switch on H2) so that the waveform on the oscilloscope is 5Vp-p.
8. Offset adjustment: Adjust RV104 (switch on H1) and RV105 (switch on H2) so that the waveform on the oscilloscope is A=B.

Note: Set the sweep time longer for easy waveform checking.

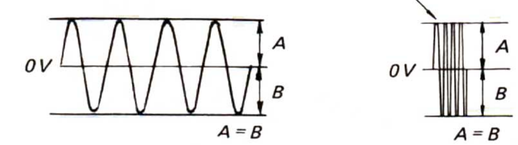

waveform on oscilloscope.

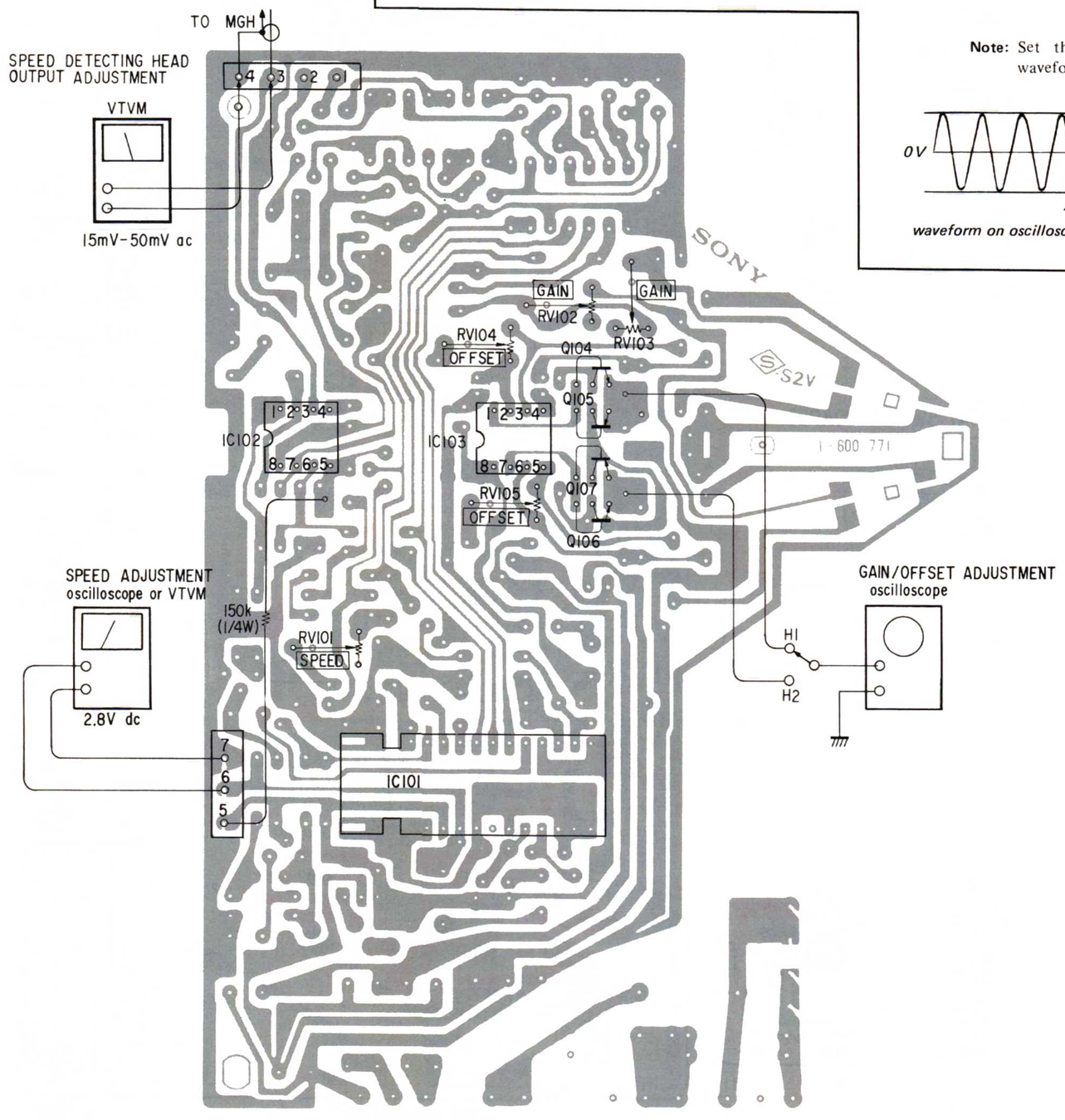

SECTION 7
DIAGRAMS

7-1. MOUNTING DIAGRAM
– Conductor Side –

Note:
- ○—— : parts extracted from the component side.
- ●—— : parts extracted from the conductor side.
- Color code of sleeving over the end of the jacket.

- Readings are taken under no-signal conditions with a VOM (20kΩ/V).
  no mark : 33 rpm
  ( ) : STOP mode
  < > : When the turntable rotates counterclockwise.
  [ ] : The instant S1 is depressed.
- Waveforms are sketched at 33 rpm.
- : B+ pattern
- : B- pattern

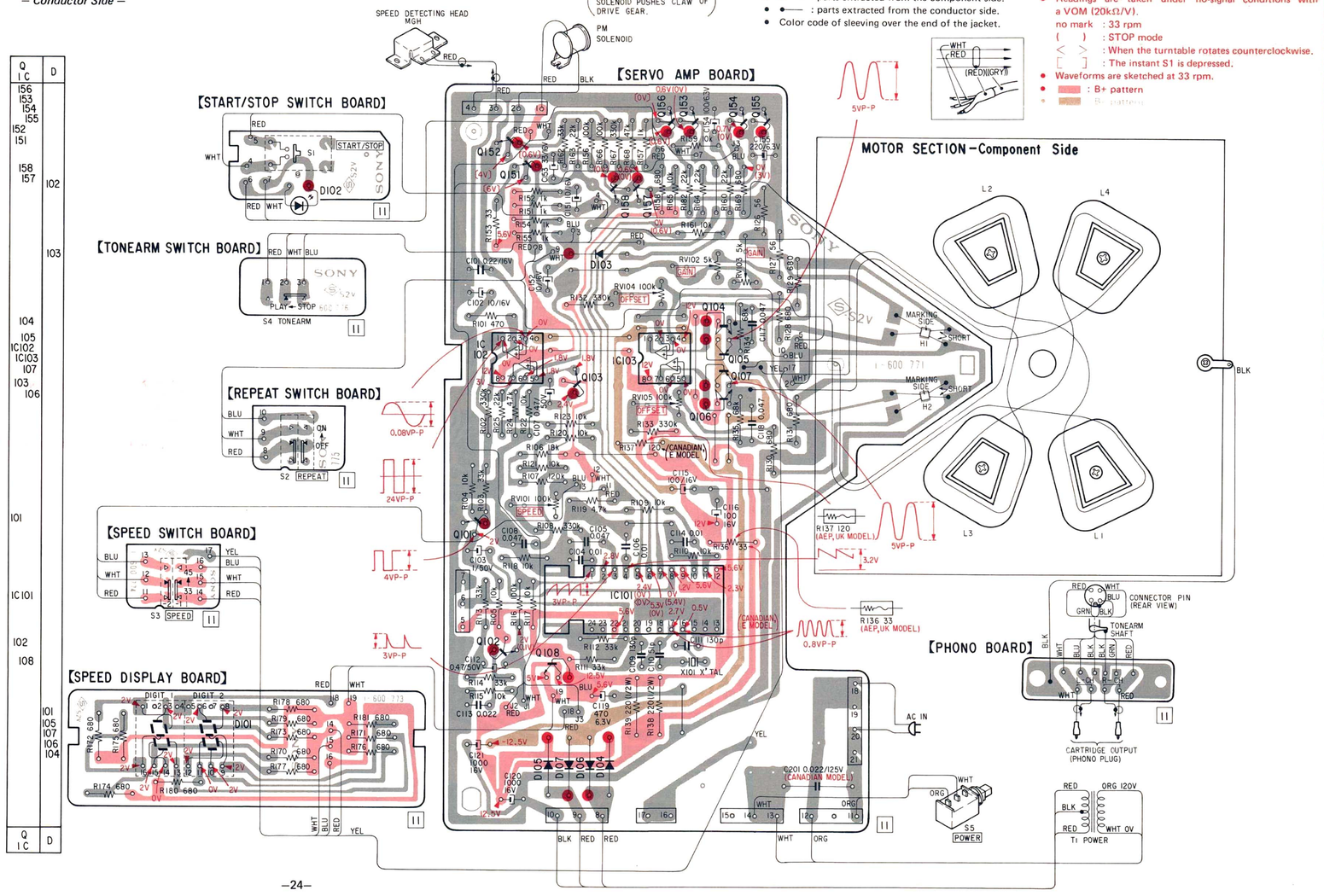

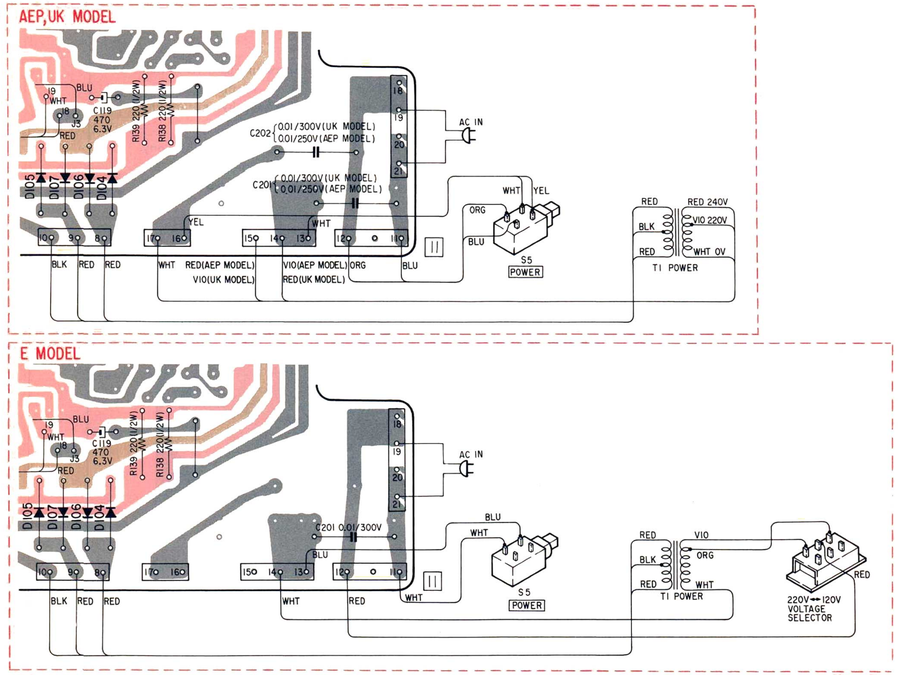

REPLACEMENT SEMICONDUCTORS

For replacement, use semiconductors except in ( ).

Q101–103, Q152–158 : 2SC1364 (2SC1815)

Q151: 2SA1027R (2SA1015)

D101: TLR320

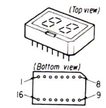

D104–107: 10E2

Q104, 106: Canadian, E model 2SD571

AEP, UK model 2SD414

IC101: CX193

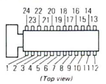

D102: TLR124

(GP08B)

Q105, 107: Canadian, E model 2SB605

AEP, UK model 2SB548

IC102: μPC4557C
IC103: μPC4558C

D103: 1S1555

H1, 2: 5GF-MS-07F

7-2. SCHEMATIC DIAGRAM

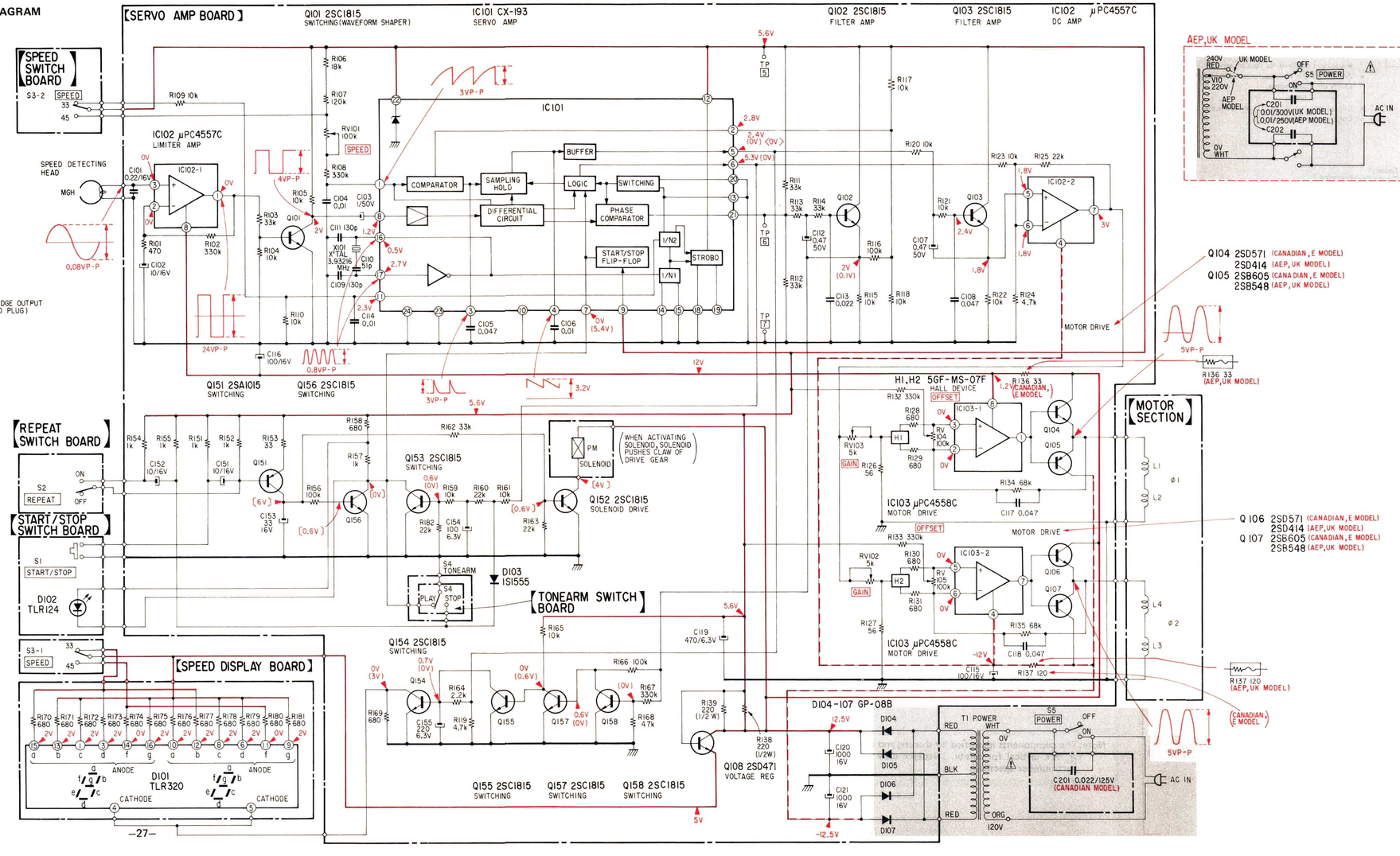

Note:

- All capacitors are in μF unless otherwise noted. pF : μμF 50WV or less are not indicated except for electrolytics.
- All resistors are in ohms, ¼W unless otherwise noted. kΩ : 1000Ω, MΩ : 1000kΩ
- Voltages are dc with respect to ground unless otherwise noted.
- ⏚ : chassis ground.
- ——— : B+ bus.
- – – – : B− bus.
- ▭ : panel designation.
- ▭ : adjustment for repair.
- Voltage variations may be noted due to normal production tolerances.
- ⊸⊷ : fusible resistor.
- Readings are taken under no-signal conditions with a VOM (20kΩ/V).
  - no mark : 33 rpm
  - ( ) : STOP mode
  - < > : When the turntable rotates counterclockwise.
  - [ ] : The instant S1 is depressed.
- Waveforms are sketched at 33 rpm.
- Switch

Ref. No.	Switch	Position
S1	START/STOP	START
S2	REPEAT	OFF
S3	SPEED	33
S4	TONEARM	STOP
S5	POWER	OFF

Note: The components identified by shading and mark ⚠ are critical for safety. Replace only with part number specified.

Note: Les composants identifiés par une trame et une marque ⚠ sont critiques pour la sécurité. Ne les remplacer que par une pièce portant le numéro spécifié.

(1)

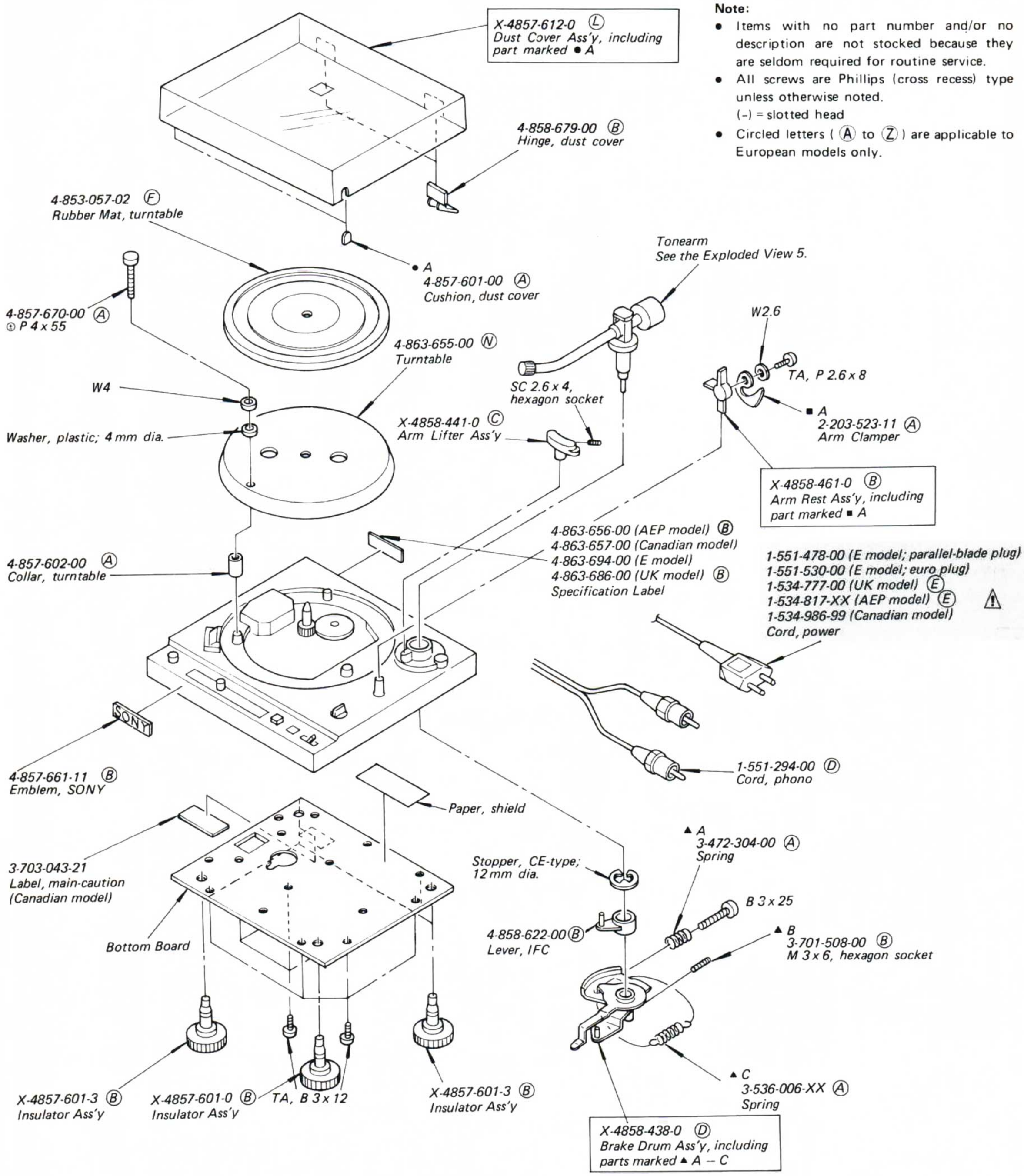

Note:

- Items with no part number and/or no description are not stocked because they are seldom required for routine service.
- All screws are Phillips (cross recess) type unless otherwise noted.
  (-) = slotted head
- Circled letters (Ⓐ to Ⓩ) are applicable to European models only.

Note: The components identified by shading and mark ⚠ are critical for safety. Replace only with part number specified.

Note: Les composants identifiés par une trame et une marque ⚠ sont critiques pour la sécurité. Ne les remplacer que par une pièce portant le numéro spécifié.

www.vinylengine.com

(2)

Note:

- Items with no. part number and/or no description are not stocked because they are seldom required for routine service.
- All screws are Phillips (cross recess) type unless otherwise noted.
  (-) = slotted head
- Circled letters (Ⓐ to Ⓩ) are applicable to European models only.

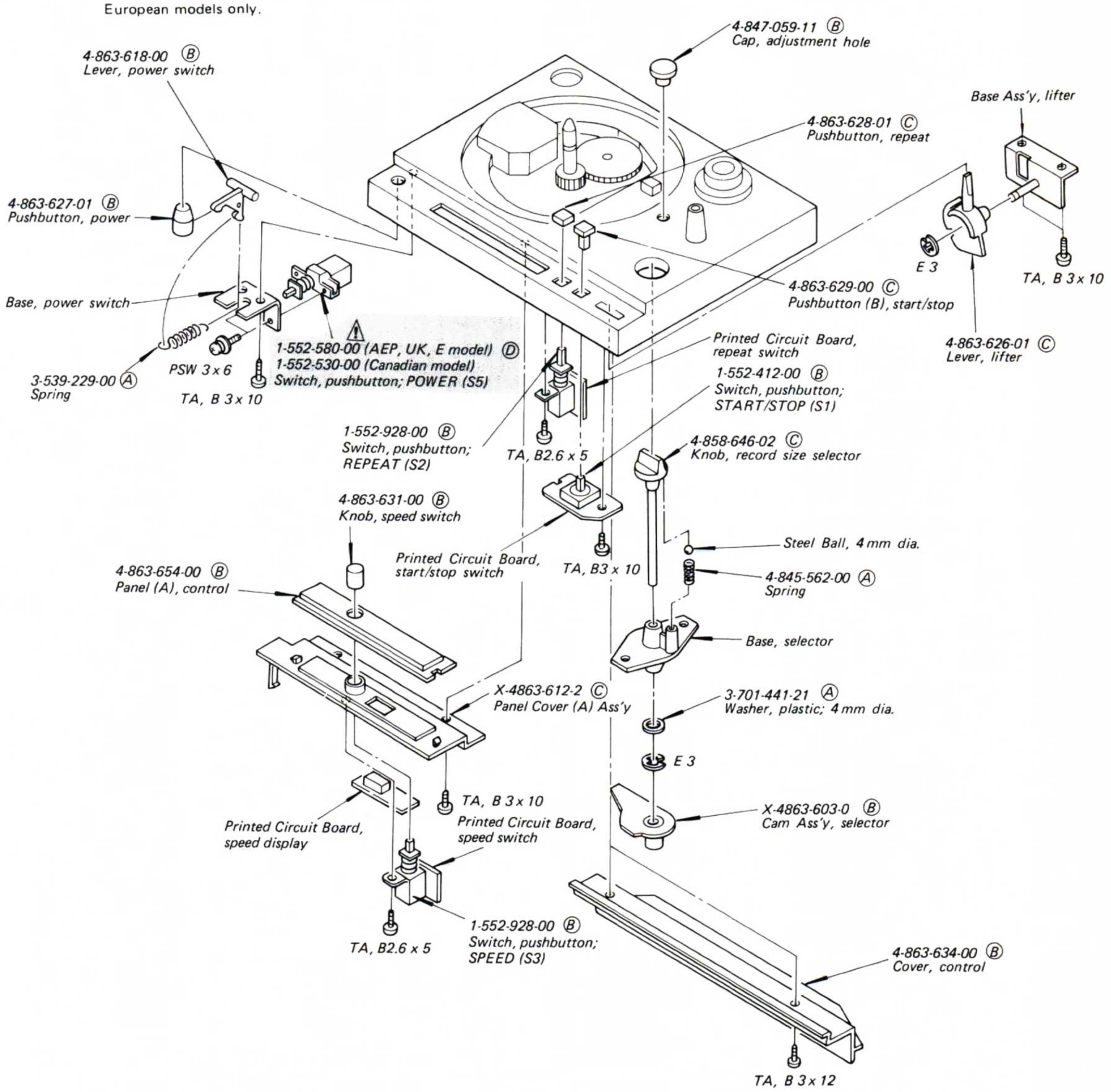

Note: The components identified by shading and mark ⚠ are critical for safety. Replace only with part number specified.

Note: Les composants identifiés par une trame et une marque ⚠ sont critiques pour la sécurité. Ne les remplacer que par une pièce portant le numéro spécifié.

www.vinylengine.com

(3)

Note:

- Items with no part number and/or no description are not stocked because they are seldom required for routine service.
- All screws are Phillips (cross recess) type unless otherwise noted.
  (-) = slotted head
- Circled letters (Ⓐ to Ⓩ) are applicable to European models only.

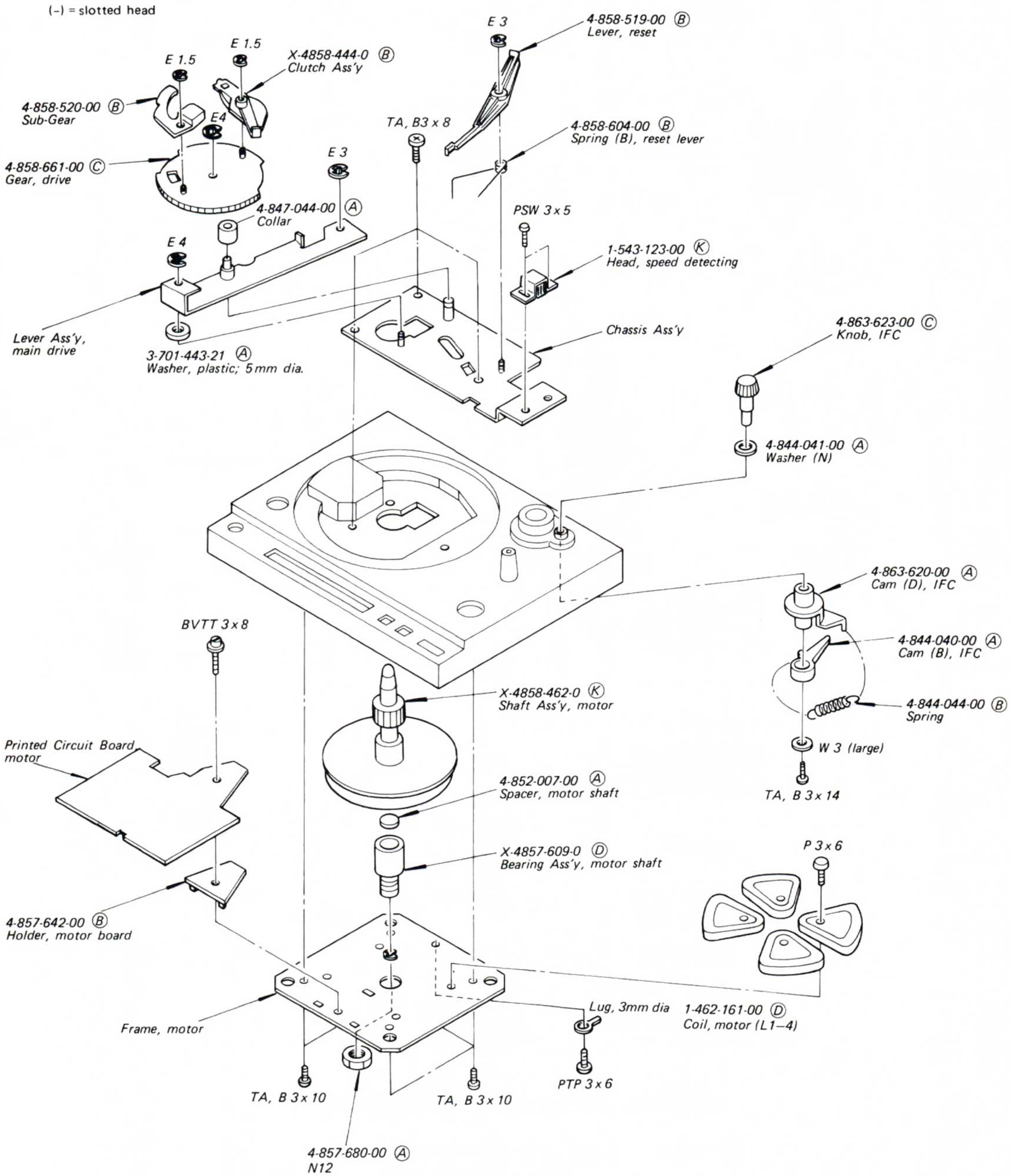

www.vinylengine.com

(4)

Note:

- Items with no part number and/or no description are not stocked because they are seldom required for routine service.
- All screws are Phillips (cross recess) type unless otherwise noted.
  (-) = slotted head
- Circled letters (Ⓐ to Ⓩ) are applicable to European models only.

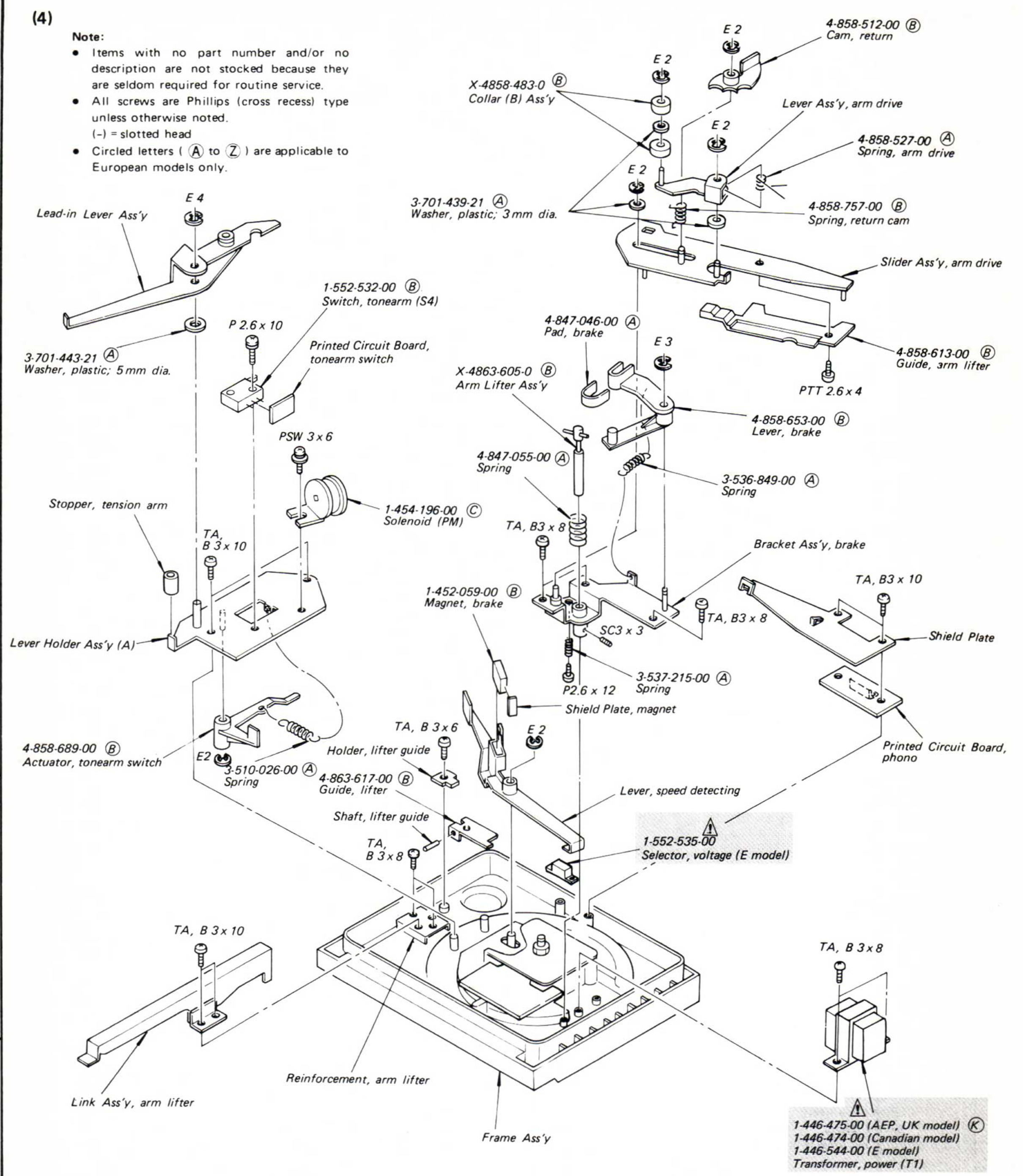

Note: The components identified by shading and mark ⚠ are critical for safety. Replace only with part number specified.

Note: Les composants identifiés par une trame et une marque ⚠ sont critiques pour la sécurité. Ne les remplacer que par une pièce portant le numéro spécifié.

www.vinylengine.com

(5)

X-4863-601-0 Ⓔ
Counterweight Ass'y

4-863-603-00 Ⓑ
Rubber, counterweight shaft

TA, B 3x8

4-863-602-00 Ⓑ
Shaft, counterweight

4-863-604-00 Ⓑ
Bearing, pivot

Washer, 3mm dia.

4-863-632-00 Ⓑ
Arm Plate, upper

TA, P 2x5

4-863-609-00 Ⓑ
Holder, pipe

4-844-054-00 Ⓐ
Spring, plate

4-857-628-00 Ⓑ
Pivot (B)

P 1.7x3

4-863-604-00 Ⓑ
Bearing, pivot

TA, P 2x5

4-857-633-00 Ⓑ
Pivot (A)

4-857-644-00 Ⓓ
Arm Pipe

2-203-518-41 Ⓑ
Screw, pivot

X-4846-016-3 Ⓑ
Ground Plate (A) Ass'y

2-203-519-01 Ⓑ
Nut (A), pivot

PTT 1.7x2.5

X-4863-615-1 Ⓙ
Arm Shaft Ass'y

X-2089-987-0 Ⓑ
Ground Plate Ass'y

1-561-013-00 Ⓔ
Connector, neck cylinder

TA, P 2.6x8

AEP, UK, E model

2-056-532-00 Ⓑ
Screw (A), cartridge

2-229-507-00 Ⓐ
Washer

X-4863-602-0 Ⓕ
Head Shell Ass'y; including parts marked ♦ A

2-227-313-00 Ⓐ
Spacer

♦ A
X-2089-618-1 (red) Ⓑ
X-2089-618-2 (green) Ⓑ
X-2089-618-3 (white) Ⓑ
X-2089-618-4 (blue) Ⓑ
Leads Ass'y

A-4505-003-A Ⓜ
Cartridge Ass'y, XL-15; including parts marked ※ A, B

4-815-655-01 Ⓐ
Nut, cartridge

※ A
A-4587-009-A Ⓙ
Stylus Ass'y, ND-15G

※ B
X-2227-304-0 Ⓒ
Stylus Cover Ass'y

Note:

- Items with no part number and/or no description are not stocked because they are seldom required for routine service.
- All screws are Phillips (cross recess) type unless otherwise noted.
  (-) = slotted head
- Circled letters (Ⓐ to Ⓩ) are applicable to European models only.

www.vinylengine.com

SECTION 9
ELECTRICAL PARTS LIST

Note: Circled letters (Ⓐ to Ⓩ) are applicable to European models only.

Ref. No.	*Part No.*		*Description*
	SEMICONDUCTORS		
	Transistors		
⇒ Q101–103	8-729-663-47	Ⓑ	2SC1364
Q104	8-729-157-11		2SD571 (Canadian, E model)
	8-729-141-43	Ⓑ	2SD414 (AEP, UK model)
Q105	8-729-160-51		2SB605 (Canadian, E model)
	8-729-154-83	Ⓒ	2SB548 (AEP, UK model)
Q106	8-729-157-11		2SD571 (Canadian, E model)
	8-729-141-43	Ⓑ	2SD414 (AEP, UK model)
Q107	8-729-160-51		2SB605 (Canadian, E model)
	8-729-154-83	Ⓒ	2SB548 (AEP, UK model)
⇒ Q151	8-729-612-77	Ⓑ	2SA1027R
⇒ Q152–158	8-729-663-47	Ⓑ	2SC1364
	ICs		
IC101	8-751-930-00	Ⓚ	CX193
IC102	8-759-145-57	Ⓓ	μPC4557C
IC103	8-759-145-58	Ⓓ	μPC4558C
	Diodes		
D101	8-719-803-20	Ⓚ	TLR320
D102	8-719-812-41	Ⓑ	TLR124
D103	8-719-815-55	Ⓑ	1S1555
⇒ D104–107	⚠ 8-719-200-02	Ⓑ	10E2
	Hall Elements		
H1, 2	8-719-905-07	Ⓓ	5GF-MS-07F
	COIL AND TRANSFORMER		
L1–4	1-462-161-00	Ⓓ	Motor Coil, stator
T1	⚠ 1-446-474-00		Power, PT (Canadian model)
	⚠ 1-446-475-00	Ⓚ	Power, PT (AEP, UK model)
	⚠ 1-446-544-00		Power PT (E model)

⇒: Due to standardization, interchangeable replacements may be substituted for parts specified in the diagrams.

Note: The components identified by shading and mark ⚠ are critical for safety. Replace only with part number specified.

Ref. No.	*Part No.*		*Description*		
	CAPACITORS				
	All capacitors are in μF. 50WV or less are not indicated except for electrolytics. pF : μμF, elect : electrolytic				
C101	1-131-453-00	Ⓑ	0.22		tantalum
C102	1-123-316-00	Ⓑ	10	16V	elect
C103	1-123-352-00	Ⓑ	1	50V	elect
C104	1-108-239-00	Ⓑ	0.01		mylar
C105	1-108-246-00	Ⓑ	0.047		mylar
C106	1-108-239-00	Ⓑ	0.01		mylar
C107	1-123-351-00	Ⓑ	0.47	50V	elect
C108	1-161-021-00	Ⓐ	0.047		semiconductor ceramic
C109	1-101-081-00	Ⓐ	130p		ceramic
C110	1-102-491-00	Ⓐ	51p		ceramic
C111	1-101-081-00	Ⓐ	130p		ceramic
C112	1-123-351-00	Ⓑ	0.47	50V	elect
C113	1-161-017-00	Ⓐ	0.022		semiconductor ceramic
C114	1-101-004-00	Ⓐ	0.01		ceramic
C115, 116	1-123-320-00	Ⓑ	100	16V	elect
C117, 118	1-108-246-00	Ⓑ	0.047		mylar
C119	1-123-298-00	Ⓑ	470	6.3V	elect
C120, 121	1-123-324-00	Ⓑ	1000	16V	elect
C151, 152	1-123-316-00	Ⓑ	10	16V	elect
C153	1-123-318-00	Ⓑ	33	16V	elect
C154	1-121-414-00	Ⓑ	100	10V	elect
C155	1-123-296-00	Ⓑ	220	6.3V	elect
C201	⚠ 1-130-098-00		0.022	125V	polyethylene (Canadian model)
C201, 202	⚠ 1-130-196-00	Ⓓ	0.01	250V	polyethylene (AEP model)
C201	⚠ 1-130-230-00	Ⓑ	0.01	300V	polyethylene (UK, E model)
C202	⚠ 1-130-230-00	Ⓑ	0.01	300V	polyethylene (UK model)
	RESISTORS				
	All resistors are in ohms. Common ¼W carbon resistors are omitted. Check schematic diagram for values.				
R136	1-217-393-00	Ⓑ	33	¼W	fusible (AEP, UK model)

Note: Les composants identifiés par une trame et une marque ⚠ sont critiques pour la sécurité. Ne les remplacer que par une pièce portant le numéro spécifié.

www.vinylengine.com

Note: Circled letters (Ⓐ to Ⓩ) are applicable to European models only.

Ref. No.	*Part No.*	*Description*			
R137	1-212-883-00	Ⓐ	120	¼W	fusible (AEP, UK model)
R138, 139	1-244-857-00	Ⓐ	220	½W	carbon
RV101	1-226-239-00	Ⓑ	100k, adjustable; SPEED		
RV102,103	1-226-235-00	Ⓑ	5k, adjustable; GAIN		
RV104,105	1-226-239-00	Ⓑ	100k, adjustable; OFFSET		

SWITCHES

S1	1-552-412-00	Ⓑ	Pushbutton; START/STOP
S2	1-552-928-00	Ⓑ	Pushbutton; REPEAT
S3	1-552-928-00	Ⓑ	Pushbutton; SPEED
S4	1-552-532-00	Ⓑ	Pushbutton; TONEARM
S5	⚠1-552-530-00		Pushbutton; POWER (Canadian model)
	⚠1-552-580-00	Ⓓ	Pushbutton; POWER (AEP, UK, E model)

MISCELLANEOUS

PM	1-454-196-00	Ⓒ	Solenoide
X101	1-527-380-00	Ⓓ	Crystal 3.93216MHz
	1-452-059-00	Ⓑ	Magnet, brake
	⚠1-551-478-00		Cord, power; parallel-blade plug (E model)
	⚠1-551-530-00		Cord, power; euro plug (E model)
	⚠1-534-777-00	Ⓔ	Cord, power (UK model)
	⚠1-534-817-XX	Ⓔ	Cord, power (AEP model)
	⚠1-534-986-99		Cord, power (Canadian model)
	1-543-123-00	Ⓚ	Head, speed detecting
	1-551-294-00	Ⓓ	Cord, phono
	⚠1-552-535-00		Selector, voltage (E model)
	1-561-013-00	Ⓔ	Connector, neck cylinder

Note: The components identified by shading and mark ⚠ are critical for safety. Replace only with part number specified.

Note: Les composants identifiés par une trame et une marque ⚠ sont critiques pour la sécurité. Ne les remplacer que par une pièce portant le numéro spécifié.

ACCESSORIES AND PACKING MATERIALS

Part No.		*Description*
X-4863-602-0	Ⓕ	Head Shell Ass'y
including;		
X-2089-618-1	Ⓑ	Leads Ass'y (red)
X-2089-618-2	Ⓑ	Leads Ass'y (green)
X-2089-618-3	Ⓑ	Leads Ass'y (white)
X-2089-618-4	Ⓑ	Leads Ass'y (blue)
2-054-619-00		Washer, cartridge (Canadian model)
2-054-624-00		Screw B, cartridge (Canadian model)
2-229-507-00		Washer (Canadian model)
3-701-613-00	Ⓐ	Bag, polyethylene
3-701-616-00	Ⓐ	Bag, polyethylene
3-701-634-00	Ⓑ	Bag, polyethylene
3-701-806-00	Ⓑ	Adaptor, 45rpm
3-703-043-21		Label, main-caution (Canadian model)
3-770-875-11	Ⓘ	Manual, instruction
3-794-265-11	Ⓑ	Leaflet (AEP, UK, E model)
4-815-655-01		Nut, cartridge (Canadian model)
4-847-314-00	Ⓒ	Bag, polyethylene (main)
4-848-002-00	Ⓐ	Cushion, arm pipe
4-857-655-00	Ⓐ	Plate (A), protection
4-858-789-00	Ⓑ	Spacer (B), TT sheet
4-857-661-11	Ⓑ	Emblem, SONY
4-858-407-00	Ⓑ	Adjustor, DP
4-863-656-00	Ⓑ	Label, specification (AEP model)
4-863-657-00		Label, specification (Canadian model)
4-863-665-00	Ⓑ	Cushion, right
4-863-666-00	Ⓑ	Cushion, left
4-863-667-00	Ⓐ	Plate (D), protection
4-863-668-00	Ⓐ	Stopper, gear
4-863-672-00	Ⓔ	Carton
4-863-686-00	Ⓑ	Label, specification (UK model)
4-863-694-00		Label, specification (E model)

9-958-653-01

Sony Corporation
© 1979
79F0482-1
Printed in Japan

www.vinylengine.com