CFD-110

SERVICE MANUAL

US Model
Canadian Model
AEP Model

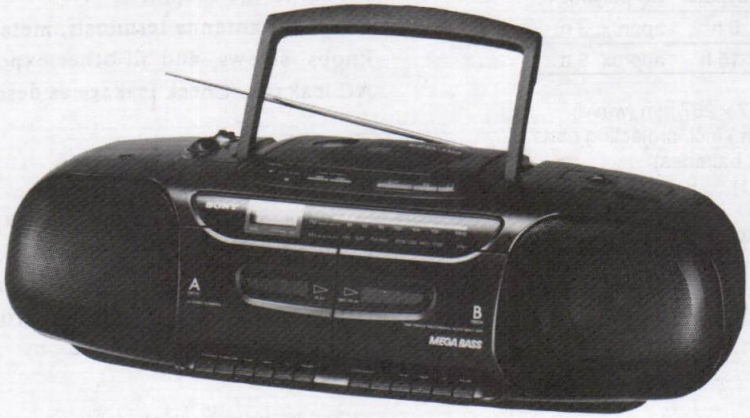

Photo: US, Canadian model

MEGA BASS

SPECIFICATIONS

AUDIO POWER SPECIFICATIONS
POWER OUTPUT AND TOTAL HARMONIC DISTORTION
With 3.2-ohm loads, both channels driven from 150-10,000 Hz; rated 2.0 W per channel-minimum RMS power, with no more than 10 % total harmonic distortion in AC operation.

CD player section

System	Compact disc digital audio system
Laser diode properties	Material: GaAlAs Wave length: 780 nm Emission duration: Continuous Laser output: Less than 44.6 µW (This output is the value measured at a distance of about 200 mm from the objective lens surface on the optical pick-up block.)
Spindle speed	200 r/min (rpm) to 500 r/min (rpm) (CLV)
Error correction	Sony Refined Super Strategy Cross Interleave Reed Solomon Code
Number of channels	2
Frequency response	20–20,000 Hz +1/–2 dB
Wow and flutter	Below measurable limit

Radio section

Frequency range

model	FM	AM
US, Canadian	87.6 – 108MHz	530 – 1,710kHz
Italian	87.5 – 108MHz	526.5 – 1,606.5kHz
AEP	87.6 – 107MHz	531 – 1,602kHz

Model Name Using Similar Mechanism	CFD-10
Optical Device Name	KSM-2101BAN
Tape Transport Mechanism Type	MF-W308-64

Antennas	FM: Telescopic antenna AM: Built-in ferrite bar antenna

Cassette-corder section

Recording system	4-track 2-channel stereo
Frequency response	TYPE I (normal) cassette: 70–10,000 Hz

General

Speaker	Full range: 10 cm dia., 3.2 ohms cone type
Inputs	Mixing microphone input jack (minijack): Sensitivity 3 mV For low impedance microphone
Outputs	Headphones jack (stereo minijack): For 16–68 ohms impedance headphones
Power output (excluding US model)	2.3 W + 2.3 W (at 3.2 ohms, 10% harmonic in DC operation)

— Continued on next page —

MICROFILM

CD RADIO CASSETTE-CORDER

SONY®

Power requirements	120 V AC, 60Hz (US, Canadian model) 220 V wisselstroom, 50Hz (AEP, Italian model)
Power consumption	17 W
Battery life	For CD radio cassette-corder:

	FM recording	Tape playback	CD playback
Sony SUM-1 (NS)	approx. 15 h	approx. 6 h	approx. 3 h
Sony Alkaline AM1	approx. 24 h	approx. 15 h	approx. 8 h

Dimensions	Approx. 591 × 177 × 267 mm (w/h/d) (23⅜ × 7 × 10⅝ in.) incl. projecting parts
Mass	5 kg (11 lb) (incl. batteries)
Supplied accessories	AC power cord (1)

Design and specifications subject to change without notice.

Information

Laser component in this product is capable of emitting radiation exceeding the limit for Class 1.

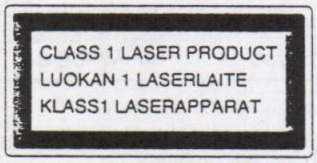

This Compact Disc player is classified as a CLASS 1 LASER product.
The CLASS 1 LASER PRODUCT label is located on the rear exterior.

SAFETY-RELATED COMPONENT WARNING!!

COMPONENTS IDENTIFIED BY MARK ⚠ OR DOTTED LINE WITH MARK ⚠ ON THE SCHEMATIC DIAGRAMS AND IN THE PARTS LIST ARE CRITICAL TO SAFE OPERATION. REPLACE THESE COMPONENTS WITH SONY PARTS WHOSE PART NUMBERS APPEAR AS SHOWN IN THIS MANUAL OR IN SUPPLEMENTS PUBLISHED BY SONY.

ATTENTION AU COMPOSANT AYANT RAPPORT À LA SÉCURITÉ!

LES COMPOSANTS IDENTIFIÉS PAR UNE MARQUE ⚠ SUR LES DIAGRAMMES SCHÉMATIQUES ET LA LISTE DES PIÈCES SONT CRITIQUES POUR LA SÉCURITÉ DE FONCTIONNEMENT. NE REMPLACER CES COMPOSANTS QUE PAR DES PIÈCES SONY DONT LES NUMÉROS SONT DONNÉS DANS CE MANUEL OU DANS LES SUPPLÉMENTS PUBLIÉS PAR SONY.

SAFETY CHECK-OUT

After correcting the original service problem, perform the following safety check before releasing the set to the customer:
Check the antenna terminals, metal trim, "metallized" knobs, screws, and all other exposed metal parts for AC leakage. Check leakage as described below.

LEAKAGE TEST

The AC leakage from any exposed metal part to earth ground and from all exposed metal parts to any exposed metal part having a return to chassis, must not exceed 0.5 mA (500 microampers). Leakage current can be measured by any one of three methods.

1. A commercial leakage tester, such as the Simpson 229 or RCA WT-540A. Follow the manufacturers' instructions to use these instruments.
2. A battery-operated AC milliammeter. The Data Precision 245 digital multimeter is suitable for this job.
3. Measuring the voltage drop across a resistor by means of a VOM or battery-operated AC voltmeter. The "limit" indication is 0.75 V, so analog meters must have an accurate low-voltage scale. The Simpson 250 and Sanwa SH-63Trd are examples of a passive VOM that is suitable. Nearly all battery operated digital multimeters that have a 2 V AC range are suitable. (See Fig. A)

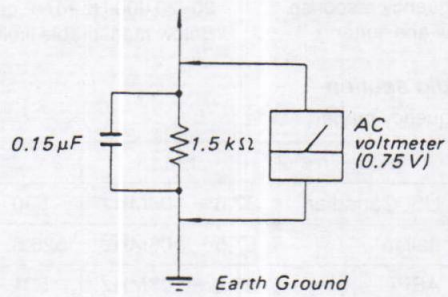

Fig. A. Using an AC voltmeter to check AC leakage.

TABLE OF CONTENTS

MODEL IDENTIFICATION

— SPECIFICATION LABEL —

US, Canadian model: AC 120 V ~60 Hz 17 W
AEP, Italian model: AC 220 V ~50 Hz 17 W

SECTION 1
SERVICING NOTES

NOTES ON HANDLING THE OPTICAL PICK-UP BLOCK OR BASE UNIT

The laser diode in the optical pick-up block may suffer electrostatic breakdown because of the potential difference generated by the charged electrostatic load, etc. on clothing and the human body.
During repair, pay attention to electrostatic brakdown and also use the procedure in the printed matter which is included in the repair parts.
The flexible board is easily damaged and should be handled with care.

NOTES ON LASER DIODE EMISSION CHECK

The laser beam on this model is concentrated so as to be focused on the disc reflective surface by the objective lens in the optical pick-up block. Therefore, when checking the laser diode emission, observe more than 25 cm away from the objective lens.

LASER DIODE AND FOCUS SEARCH OPERATION CHECK

1. Make Function switch to CD position with no disc inserted.
2. Open the lid for CD.
3. Turn on S704 as following figure.
4. Press ▶ key.
5. Confirm the laser diode emission while observing the objecting lens. When there is no emission, Auto Power Control circuit or Optical Pick-up is broken.
   Objective lens moves up and down once for the focus search.

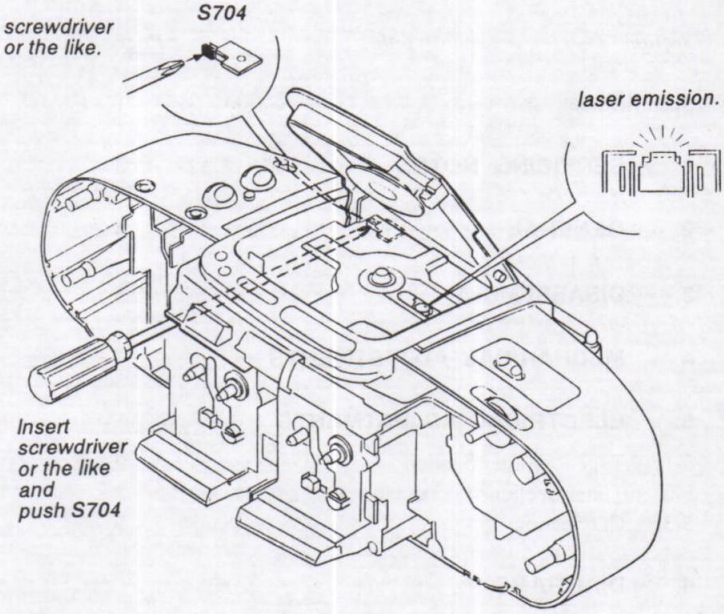

CHUCK PLATE JIG ON REPAIRING

On repairing CD section, playing a disc without the CD lid, use Chuck Plate Jig.

- Code number of Chuck Plate Jig: X-4918-255-1

SECTION 2
GENERAL

- Parts Identification

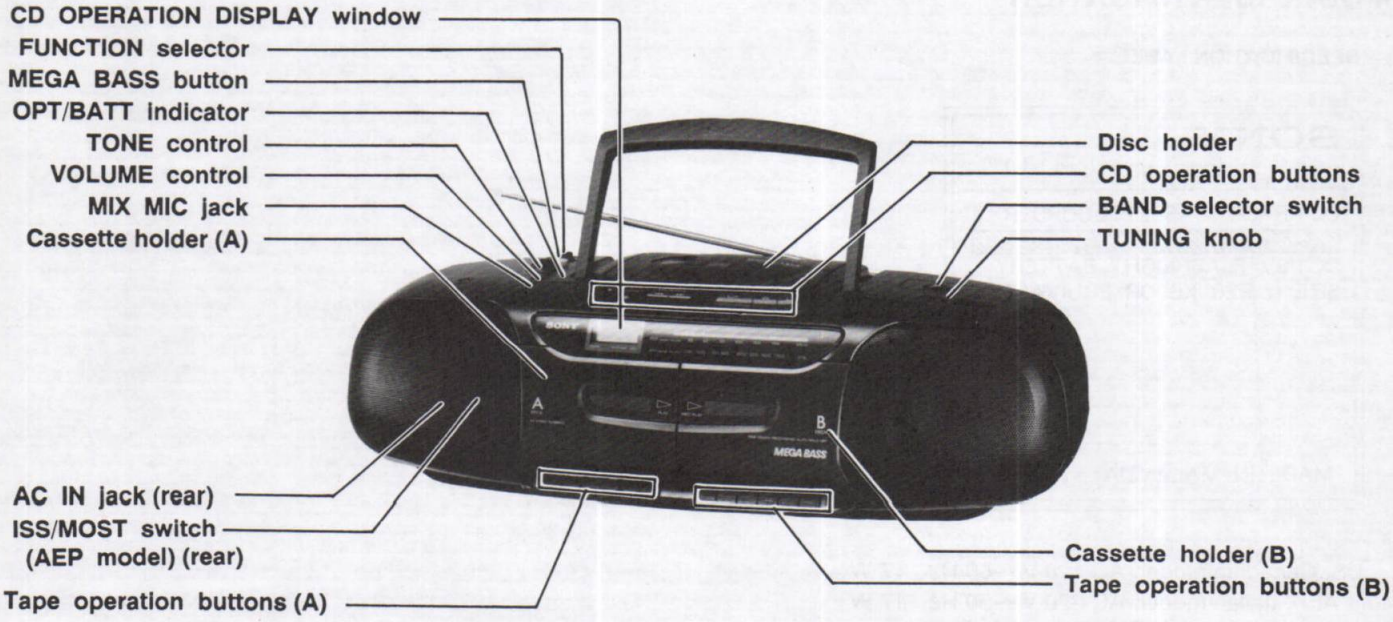

SECTION 3
DISASSEMBLY

Note: Follow the disassembly procedure in the numerical order given.

FRONT CABINET ASS'Y

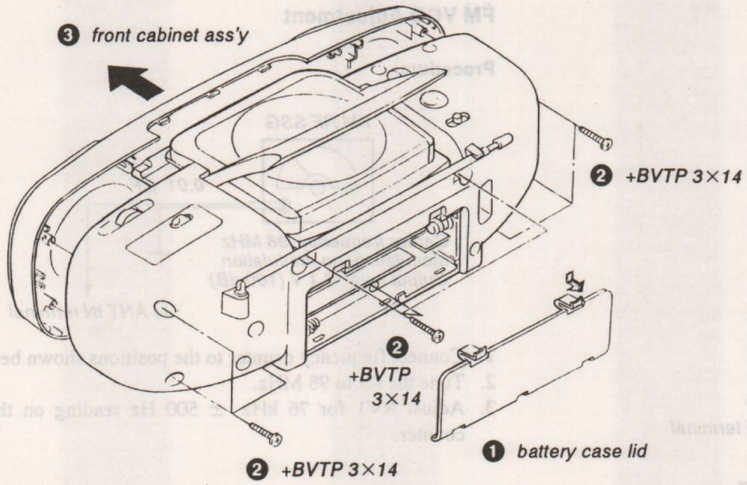

MD ASS'Y

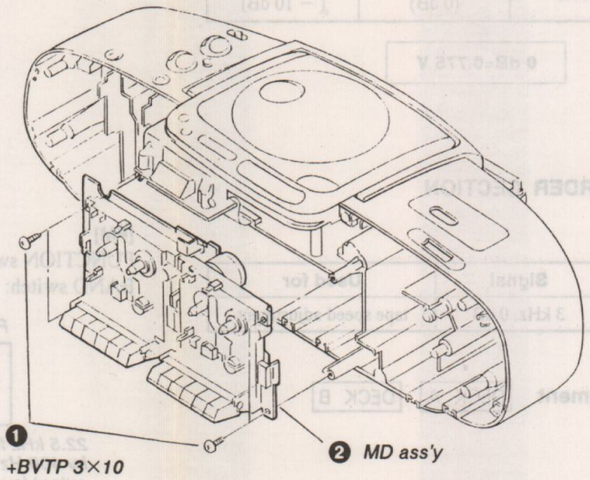

CD ASS'Y, MAIN BOARD

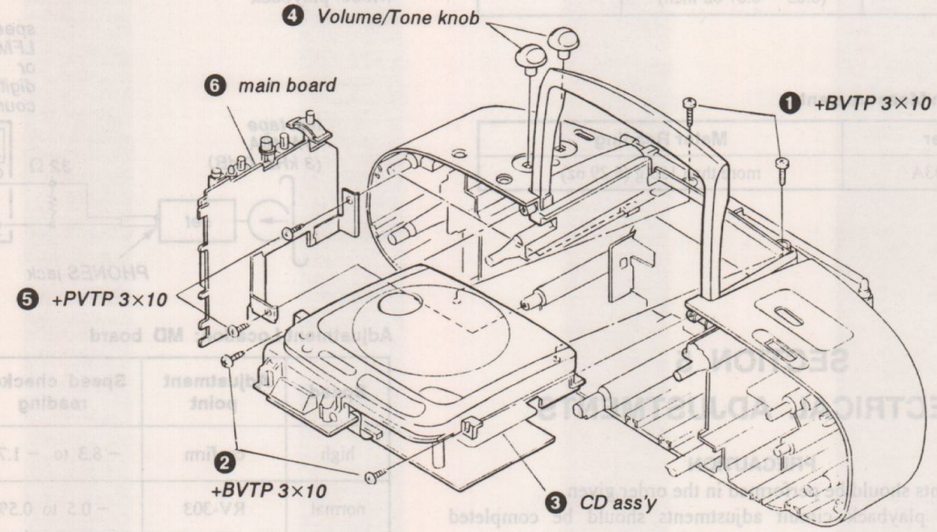

DIAL CHASSIS ASS'Y

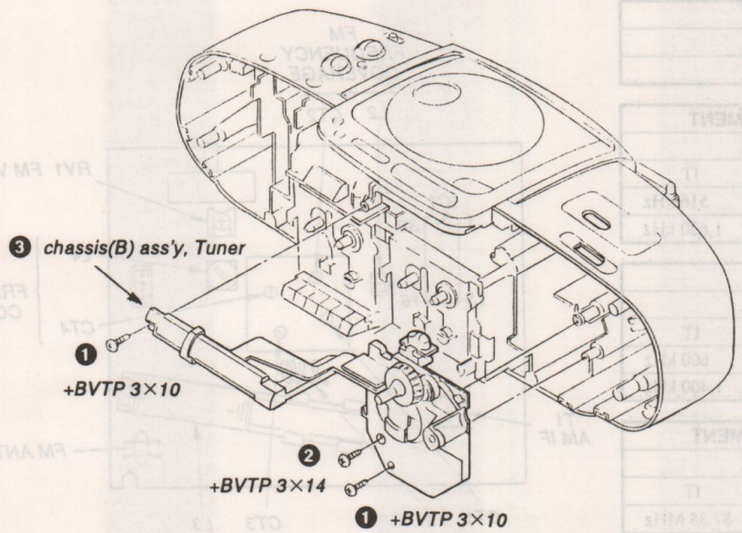

POWER BOARD

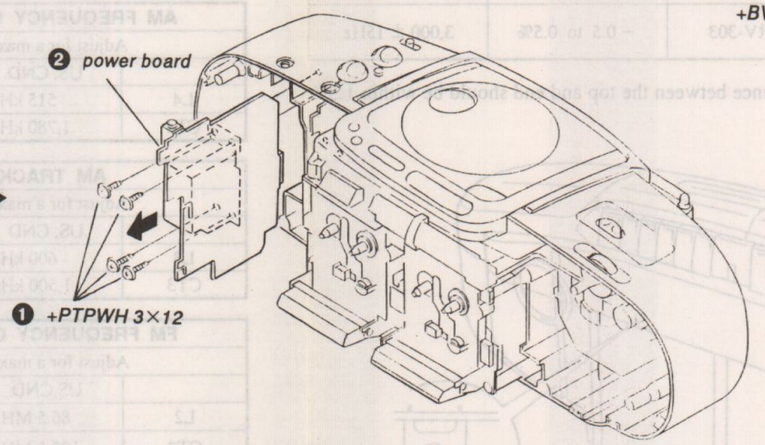

SECTION 4
MECHANICAL ADJUSTMENTS

PRECAUTION

1. Clean the following parts with a denatured-alcohol-moistened swab:
   record/playback head — pinch roller
   erase head — rubber belts
   capstan — idlers
2. Demagnetize the record/playback head with a head demagentizer. (Do not bring the head demagnetizer close to the erase head.)
3. Do not use a magnetized screwdriver for the adjustments.
4. After the adjustments, apply suitable locking compound to the parts adjusted.
5. The adjustments should be performed with the rated power supply voltage unless otherwise noted.
6. Power supply voltge: 9V dc.

Torque Measurement

Torque	Meter Reading	Torque Meter
Forward	22.5 – 55 g•cm (0.31 – 0.76 oz•inch)	CQ-102C
Fast Forward and Rewind	60 – 120 g•cm (0.83 – 1.67 oz•inch)	CQ-201B
Back Tension	2 – 5g•cm (0.03 – 0.07 oz•inch)	CQ-102C

Tape Tension Measurement

Meter	Meter Reading
CQ-403A	more than 150 g (5.29 oz)

SECTION 5
ELECTRICAL ADJUSTMENTS

PRECAUTION

1. Adjustments should be performed in the order given. Generally playback circuit adjustments should be completed before performing recording circuit adjustments.
2. Adjustments should be performed for both L-ch and R-ch. Switches and controls should be set as follows unless otherwise specified.

- Positions of switches and control knobs
  TONE ..... maximum
  MEGA BASS ..... off

- **Standard recording position**
  Adjust the VOLUME knob so that the following regulated input/output signal levels are obtained.

- **Standard input level**

	MIX MIC
Signal source impedance	300 Ω
Input signal level	4.8 mV (– 48 dB)
Frequency	1 kHz

- **Standard output level**

Output Pin	Speaker (L, R)	PHONES
Signal source impedance	3.2 Ω	32 Ω
Output signal level	0.775 V (0 dB)	0.245 V (– 10 dB)

0 dB=0.775 V

5-1. TAPE RECORDER SECTION

- **Test Tape**

Type	Signal	Used for
WS-48A	3 kHz, 0 dB	tape speed adjustment

Tape Speed Adjustment DECK A DECK B

Procedure:
Mode: playback

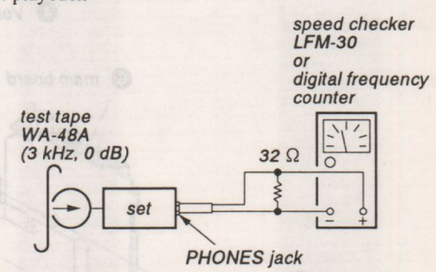

Adjustment Location: MD board

Speed	Adjustment point	Speed checker reading	Frequency counter
high	confirm	– 8.3 to – 1.7%	5,700 ± 200Hz
normal	RV-303	– 0.5 to 0.5%	3,000 ± 15Hz

Frequency difference between the top and end should be within 1.5% (45 Hz).

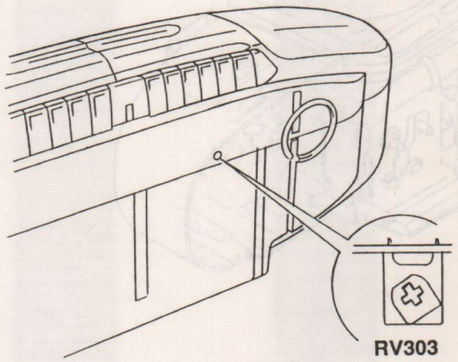

5-2. TUNER SECTION

[AM]
FUNCTION switch: RADIO
BAND switch: AM

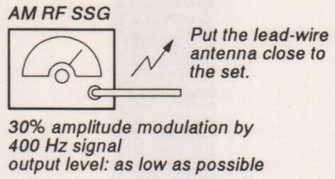

[FM]
FUNCTION switch: RADIO
BAND switch: FM

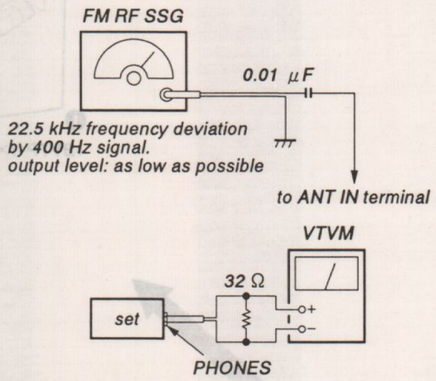

- Repeat the procedures in each adjustment several times, and the frequency coverage and tracking adjustments should be finally done by the trimmer capacitors.

AM IF ADJUSTMENT	
Adjust for a maximum reading on VTVM.	
T1	455 kHz

AM FREQUENCY COVERAGE ADJUSTMENT			
Adjust for a maximum reading on VTVM.			
	US, CND	AEP	IT
L4	515 kHz	515 kHz	516 kHz
CT4	1,780 kHz	1,680 kHz	1,630 kHz

AM TRACKING ADJUSTMENT			
Adjust for a maximum reading on VTVM.			
	US, CND	AEP	IT
L3	600 kHz	600 kHz	600 kHz
CT3	1,500 kHz	1,400 kHz	1,400 kHz

FM FREQUENCY COVERAGE ADJUSTMENT			
Adjust for a maximum reading on VTVM.			
	US,CND	AEP	IT
L2	86.5 MHz	87.35 MHz	87.35 MHz
CT2	109.5 MHz	107.8 MHz	108.3 MHz

FM TRACKING ADJUSTMENT			
Adjust for a maximum reading on VTVM.			
	US,CND	AEP	IT
L1	86.5 MHz	87.35 MHz	87.35 MHz
CT1	109.5 MHz	107.8 MHz	108.3 MHz

CND: Canadian model IT: Italian model

FM VCO Adjustment

Procedure:

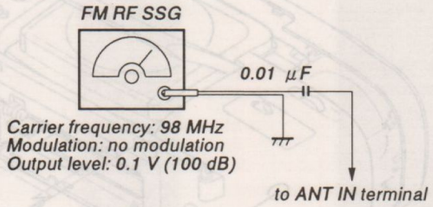

1. Connect frequency counter to the positions shown below.
2. Tune the set to 98 MHz.
3. Adjust RV1 for 76 kHz ± 500 Hz reading on the frequency counter.

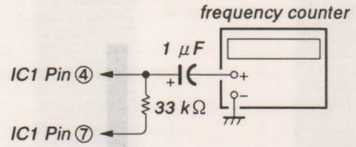

- **Adjusting Parts Location**

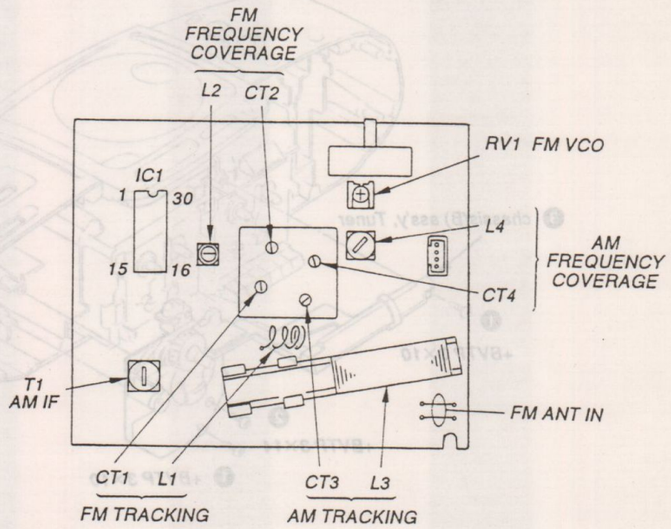

5-3. CD SECTION

Notes on Adjustment

1. Perform adjustment in service mode.
   After adjustment, be sure to release service mode.
2. Perform adjustments in the order given.
3. Use the disc (YEDS-18, Part No. 3-702-101-01) only when so indicated.

Before Adjustment

Put the set into service mode and perform the following checks. Repair if there are any problems.

- **Sled Motor Check**

1. Press ■ key for long.
2. Press ▶▶I, I◀◀ keys and confirm that the FOP moves smoothly from the innermost to outermost circumference and back smoothly and with no catching or abnormal noises.
   ▶▶I : FOP moves to the outer circumference
   I◀◀ : FOP moves to the inner circumference
3. Press ■ key for long.
4. Confirm that FOP moving operations stops. If it does not, press ■ key again longer.

- **Focus Search Check**

1. Press ■ key.
2. Press ▶ key. (Focus search operation is performed continuously.)
3. Look at the FOP objective lens and confirm that it moves up and down smoothly, with no catching or abnormal noises.
4. Press ■ key for long.
5. Confirm that focus search operation stops. If it does not, press ■ key again longer.

How to Put the Set Into Service Mode

1. Short-circuit between TP TEST and ground on the CD main board.
2. Tune POWER on. (Set the FUNCTION switch to CD position.)
3. LCD801 indicator blinks the test mode pattern.

E-F Balance Adjustment

This adjustment is to be done when the optical block is replaced.

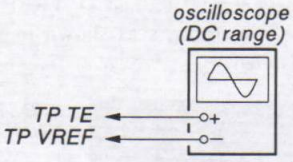

Adjustment Procedure:

1. Connect the oscilloscope between TP TE and TP VREF.
2. Put the set into service mode. (See page 9)
3. Press the ▶▶I and I◀◀ keys to move the FOP to the center.
4. Insert disc (YEDS-18) and press ▶ key.
5. Adjust RV701 so that the oscilloscope traverse waveform is symmetrical, as shown in the figure below.
6. Release service mode after adjustment is completed.

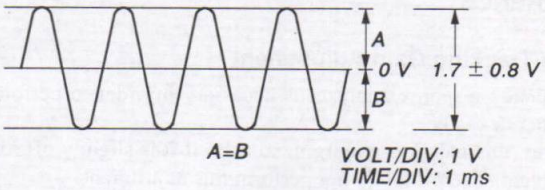

Focus Bias Adjustment

This adjustment is to be done when the optical block is replaced.

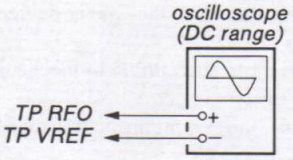

Adjustment Procedure:

1. Connect the oscilloscope between TP RFO and TP VREF.
2. Put the set into service mode. (See page 9)
3. Press the ▶▶I and I◀◀ keys to move the FOP to the center. (Move the FOP to the music area on the disc to enable easy visibility of the eye pattern.)
4. Insert disc (YEDS-18) and press ▶ key.
5. Adjust RV702 so that the oscilloscope waveform is as shown in the figure below(eye pattern).
   A good eye pattern means that the diamond shape (◇) in the center of the waveform can be clearly distinguished.
6. Release service mode after adjustment is completed.

- RF signal reference waveform (eye pattern)

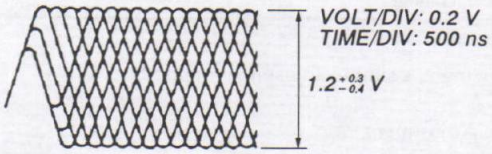

When observing the eye patern, set the oscilloscope for AC range and raise vertical sensitivity.

REFERENCE

Focus/Tracking Gain Adjustment

A frequency response analyzer is necessary in order to perform this adjustment exactly.
However, this gain has a margin, so even if it is slightly off, there is no problem. Therefore, do not perform this adjustment.
Focus/tracking gain determines the pick-up follow-up (vertical and horizontal) relative to mechanical noise and mechanical shock when the 2-axis device operate.
However, as these reciprocate, the adjustment is at the point where both are satisfied.

- When gain is raised, the noise when the 2-axis device operates increases.
- When gain is lowered, it is more susceptible to mechanical shock and skipping occurs more easily.
- When gain adjustment is off, the symptoms below appear.

Gain / Symptoms	Focus	Tracking
● The time until music starts becomes longer for STOP ➡ ▶ PLAY or automatic selection (⏮, ⏭ buttons pressed). (Normally takes about 2 seconds.)	low	low or high
● Music does not start and disc continues to rotate for STOP ➡ ▶ PLAY or automatic selection (⏭, ⏮ buttons pressed).	—	low
● Sound is interrupted during PLAY. Or time counter display stops progressing.	—	low
● More noise during 2-axis device operation.	high	high

The following is a simple adjustment method.

– Simple Adjustment –

Note: Since exact adjustment cannot be performed, remember the positions of the controls before performing the adjustment. If the positions after the simple adjustment are only a little different, return the controls to the original position.

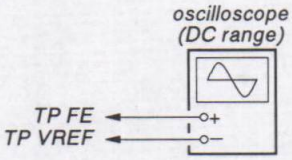

Procedure:

1. Keep the set horizontal.
   (If the set is not horizontal, this adjustment cannot be performed due to the gravity against the 2-axis device.)
2. Insert disc (YEDS-18) and press ▶ PLAY button.
3. Connect the oscilloscope between TP FE and TP VREF.
4. Adjustment RV703 so that the waveform is as shown in the figure below. (focus gain adjustment)

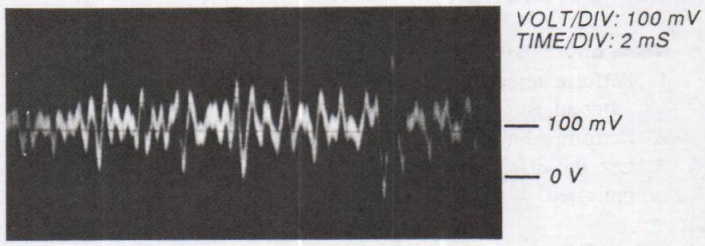

- Incorrent Examples (DC level changes more than on adjusted waveform)

low focus gain

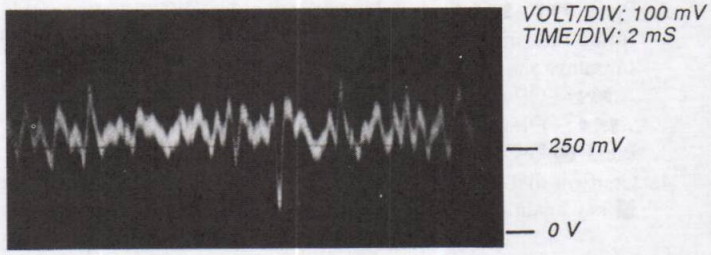

high focus gain

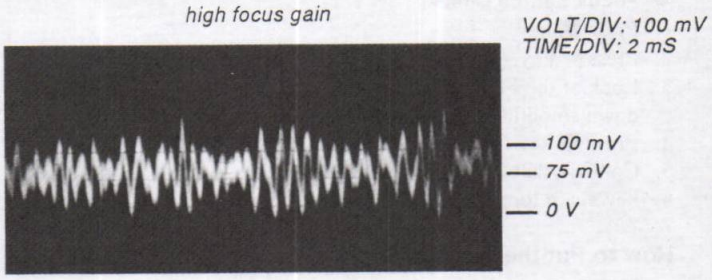

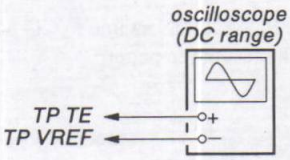

5. Connect the oscilloscope between TP TE and TP VREF.
6. Adjust RV704 so that the waveform is as shown in the figure below. (tracking gain adjustment)

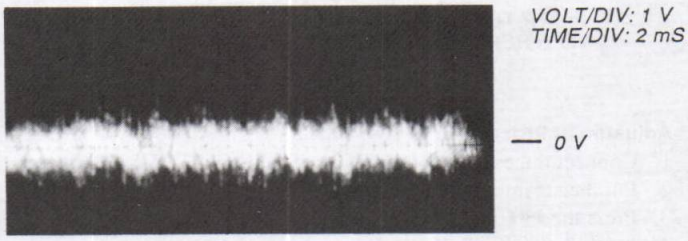

- Incorrect Examples (fundamental wave appears)

low track gain

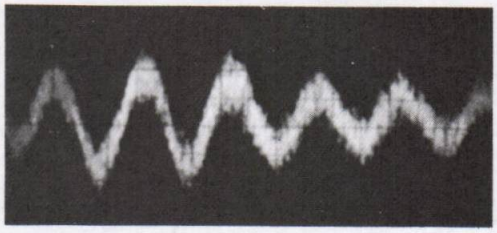

VOLT/DIV: 1 V
TIME/DIV: 2 mS

0 V

high track gain
(higher fundamental wave than for low gain)

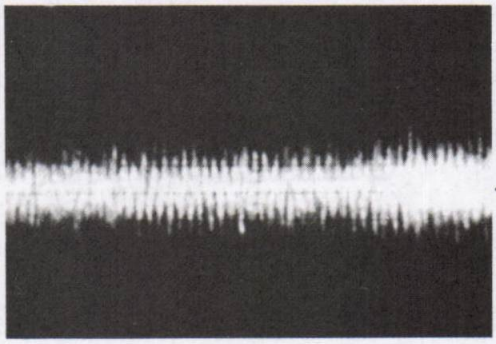

VOLT/DIV: 1 V
TIME/DIV: 2 mS

0 V

Adjustment Location: CD main board (conductor side)

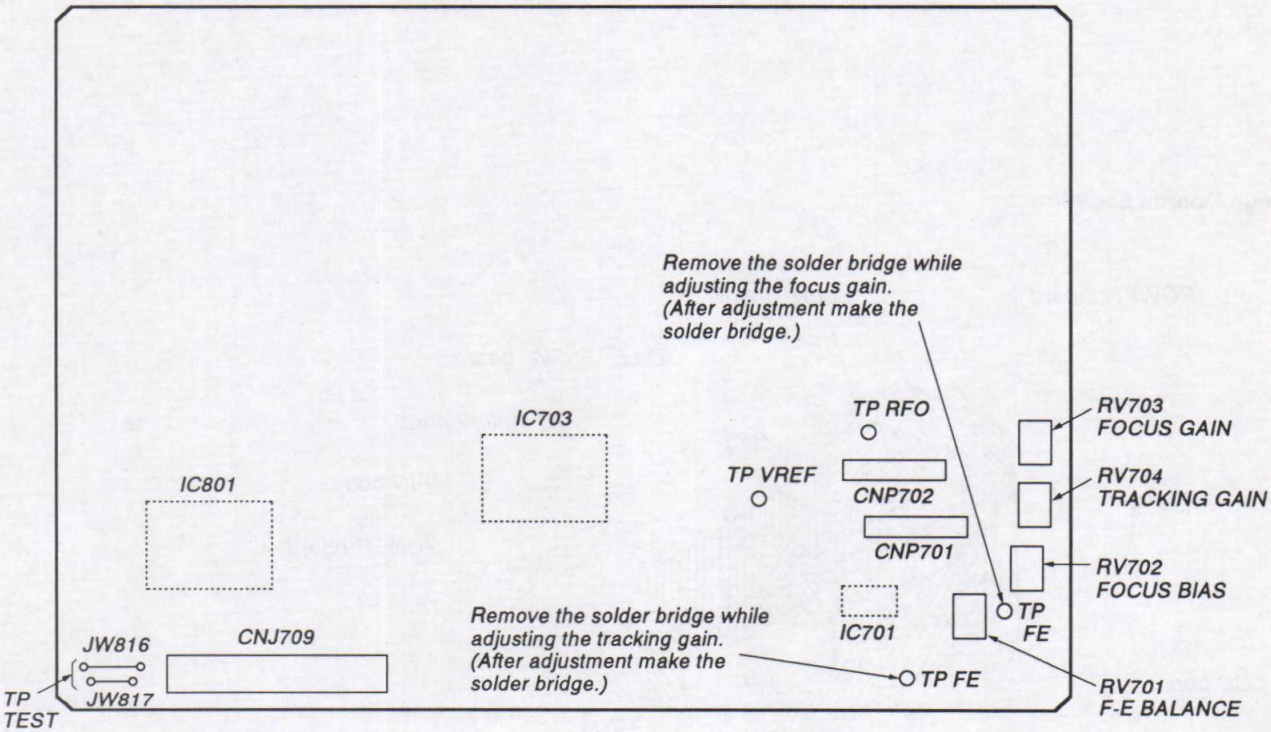

SECTION 6
DIAGRAMS

6-1. TUNER SECTION BLOCK DIAGRAM

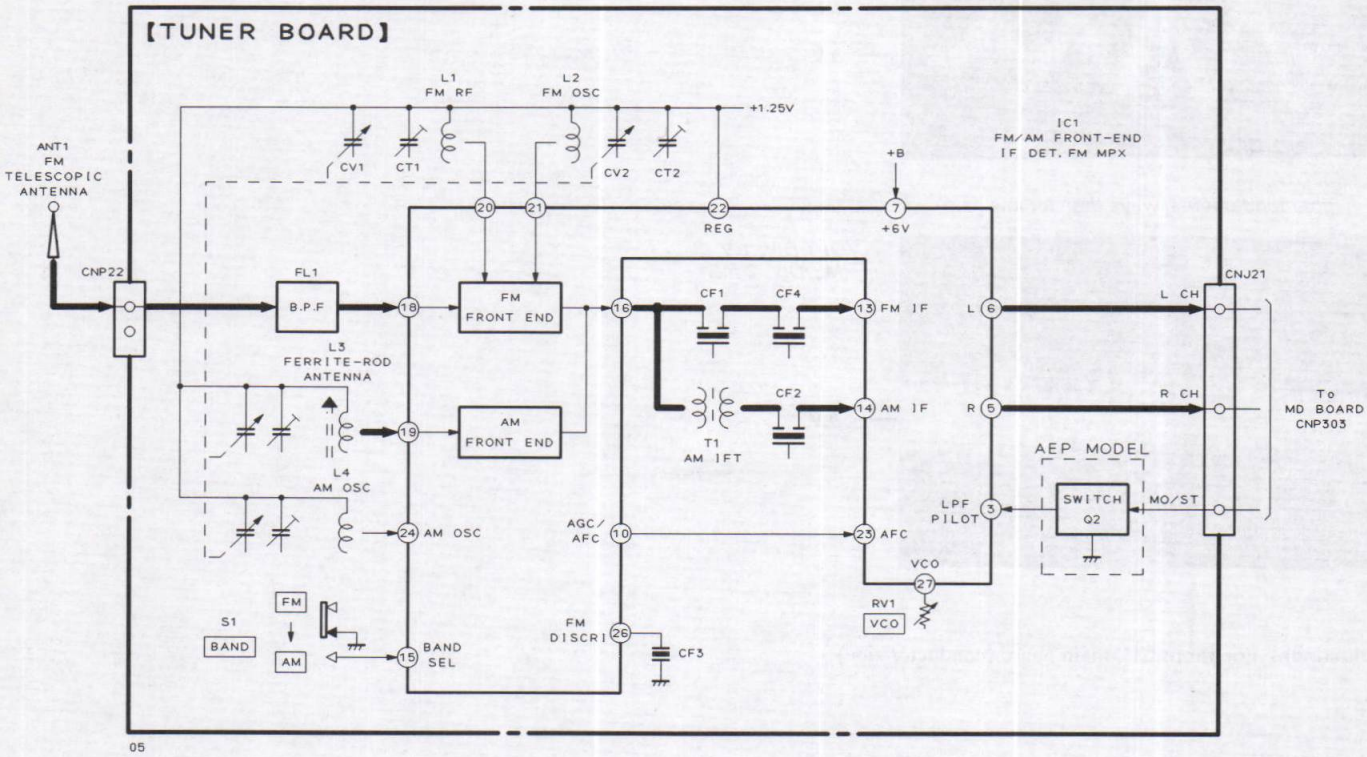

- **Circuit Boards Location**

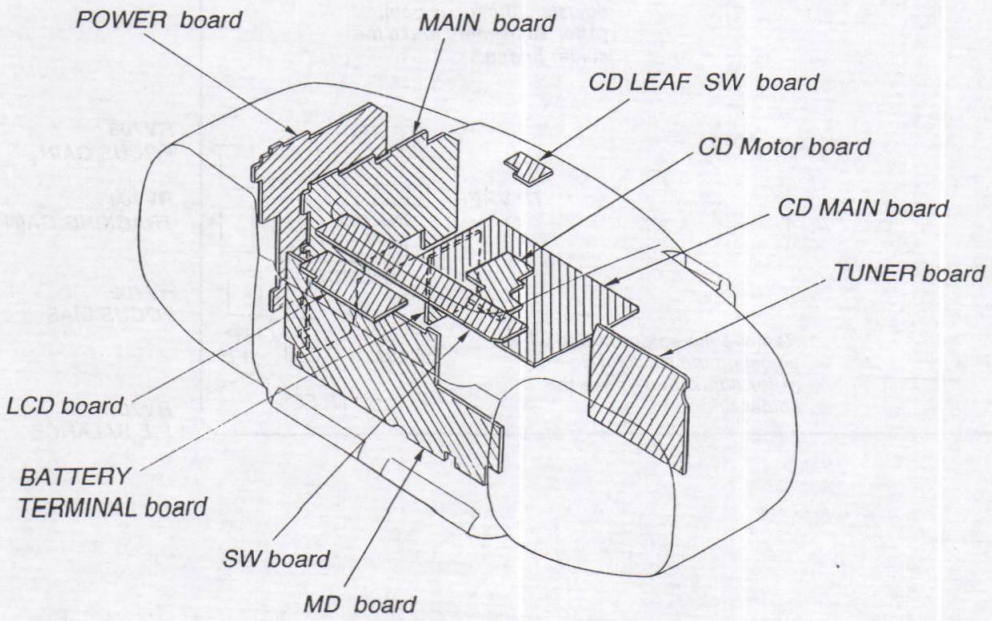

6-2. MD/MAIN/POWER SECTION BLOCK DIAGRAM

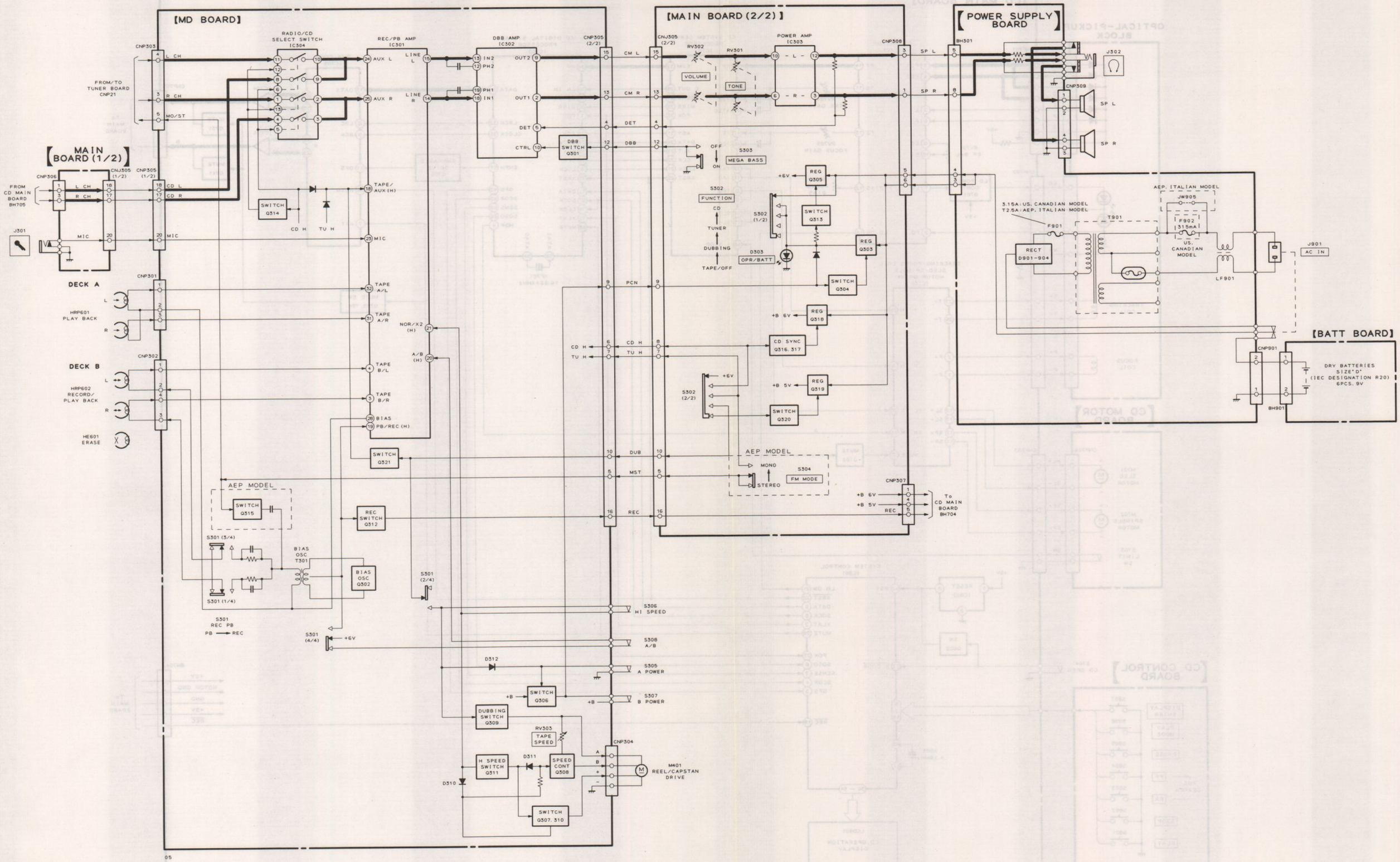

6-3. CD SECTION BLOCK DIAGRAM

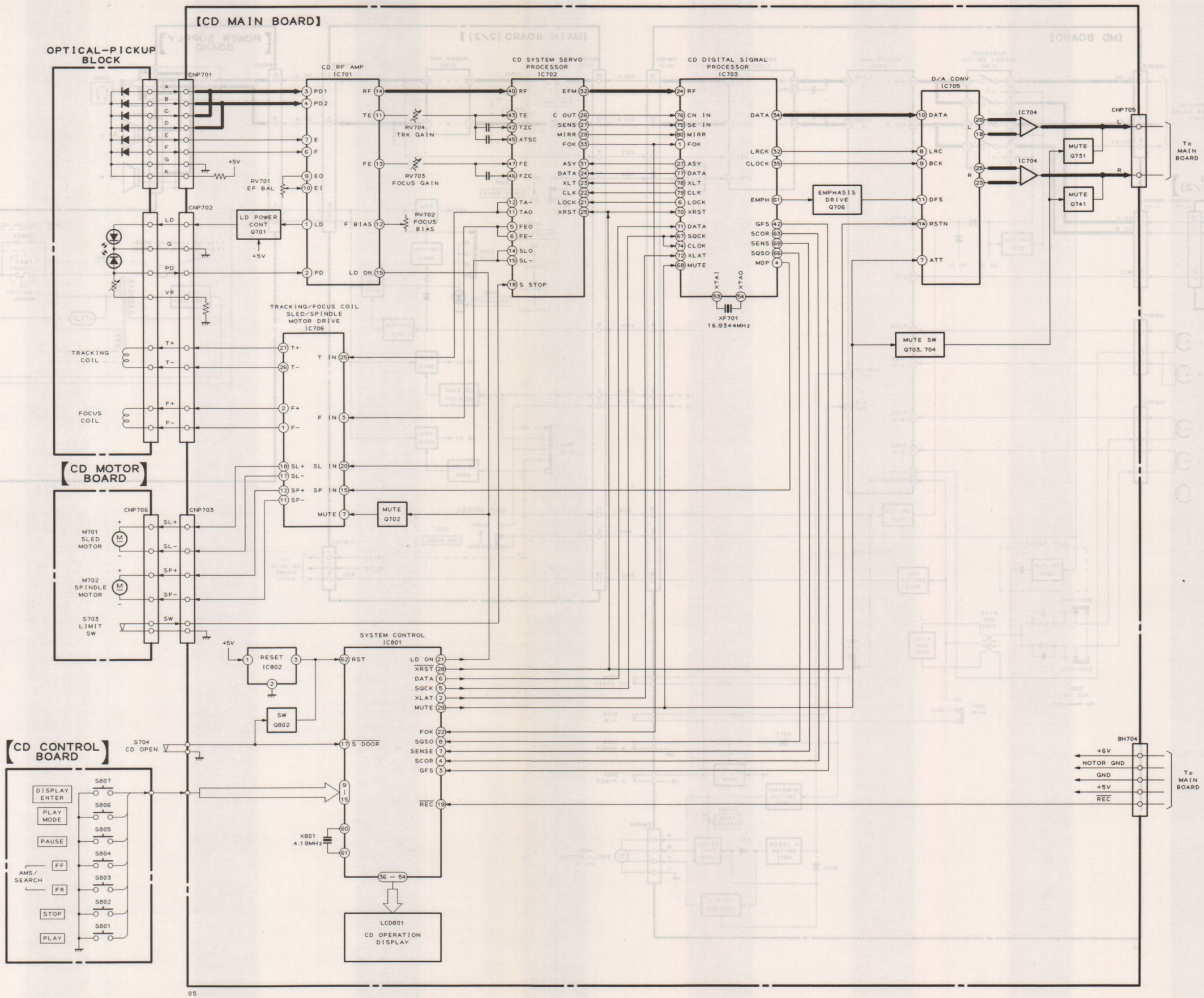

6-4. TUNER SECTION PRINTED WIRING BOARD AND SCHEMATIC DIAGRAM

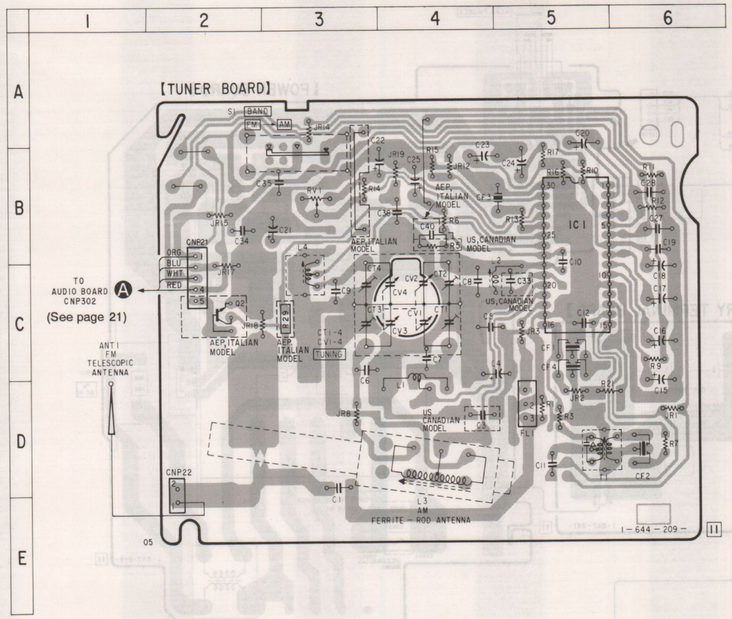

• IC Block Diagram

IC1 CXA1238S

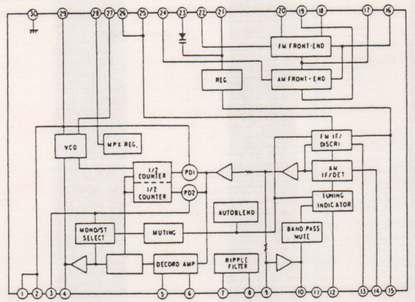

• Semiconductor Location (TUNER BOARD)

Ref. No.	Location
IC1	B – 5
Q2	C – 2

Note on Printed Wiring Board:

- ▭ : indicates side identified with part number.
- △ : internal component.

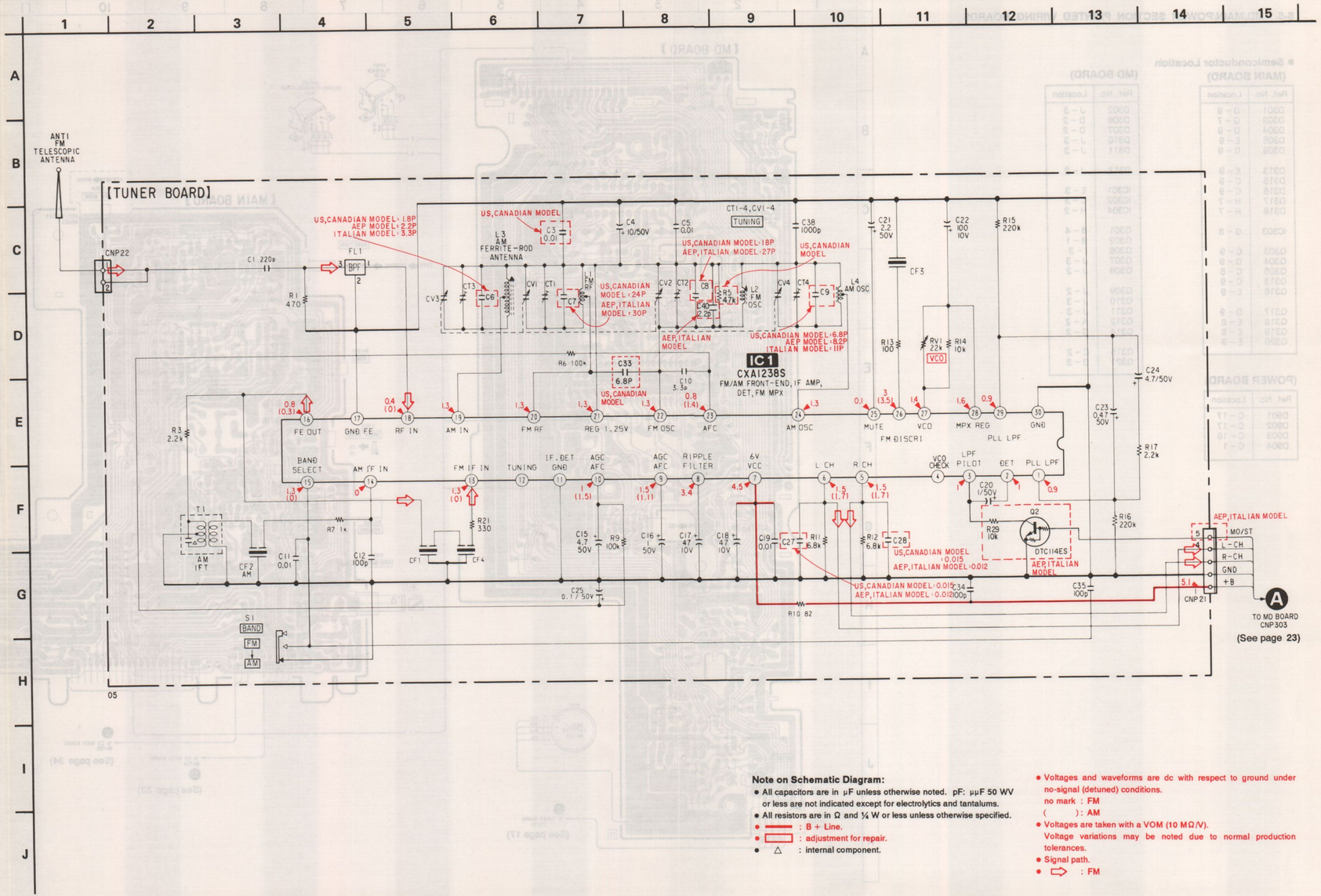

Note on Schematic Diagram:

- All capacitors are in μF unless otherwise noted. pF: μμF 50 WV or less are not indicated except for electrolytics and tantalums.
- All resistors are in Ω and ¼ W or less unless otherwise specified.
- ▬ : B + Line.
- ▭ : adjustment for repair.
- △ : internal component.

- Voltages and waveforms are dc with respect to ground under no-signal (detuned) conditions.
  no mark : FM
  ( ) : AM
- Voltages are taken with a VOM (10 MΩ/V). Voltage variations may be noted due to normal production tolerances.
- Signal path.
- ⇨ : FM

6-5. MD/MAIN/POWER SECTION PRINTED WIRING BOARDS

- **Semiconductor Location**

(MAIN BOARD)

Ref. No.	Location
D301	D – 9
D303	G – 7
D304	D – 9
D305	E – 9
D309	D – 9
D313	E – 9
D315	C – 9
D316	C – 9
D317	H – 7
D318	H – 7
IC303	G – 8
Q303	C – 9
Q304	D – 9
Q305	C – 8
Q313	C – 9
Q316	E – 9
Q317	D – 9
Q318	E – 8
Q319	E – 8
Q320	E – 9

(MD BOARD)

Ref. No.	Location
D302	J – 3
D306	D – 2
D307	D – 2
D310	J – 3
D311	J – 3
D312	J – 2
IC301	E – 3
IC302	C – 3
IC304	H – 2
Q301	B – 4
Q302	B – 1
Q306	I – 3
Q307	J – 3
Q308	J – 2
Q309	J – 2
Q310	J – 3
Q311	J – 3
Q312	A – 2
Q314	G – 2
Q315	C – 2
Q321	D – 3

(POWER BOARD)

Ref. No.	Location
D901	C – 17
D902	C – 17
D903	C – 16
D904	C – 1

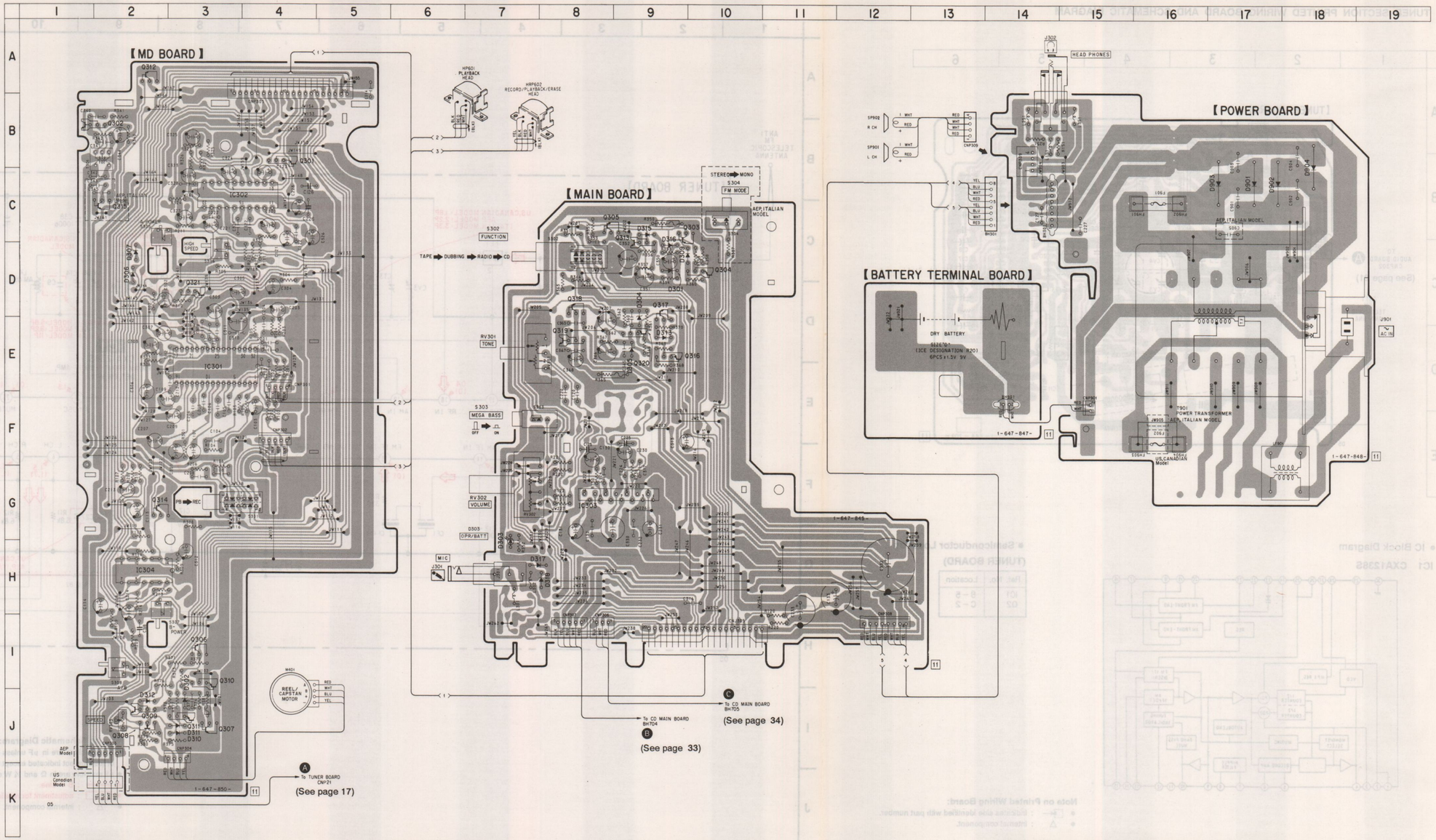

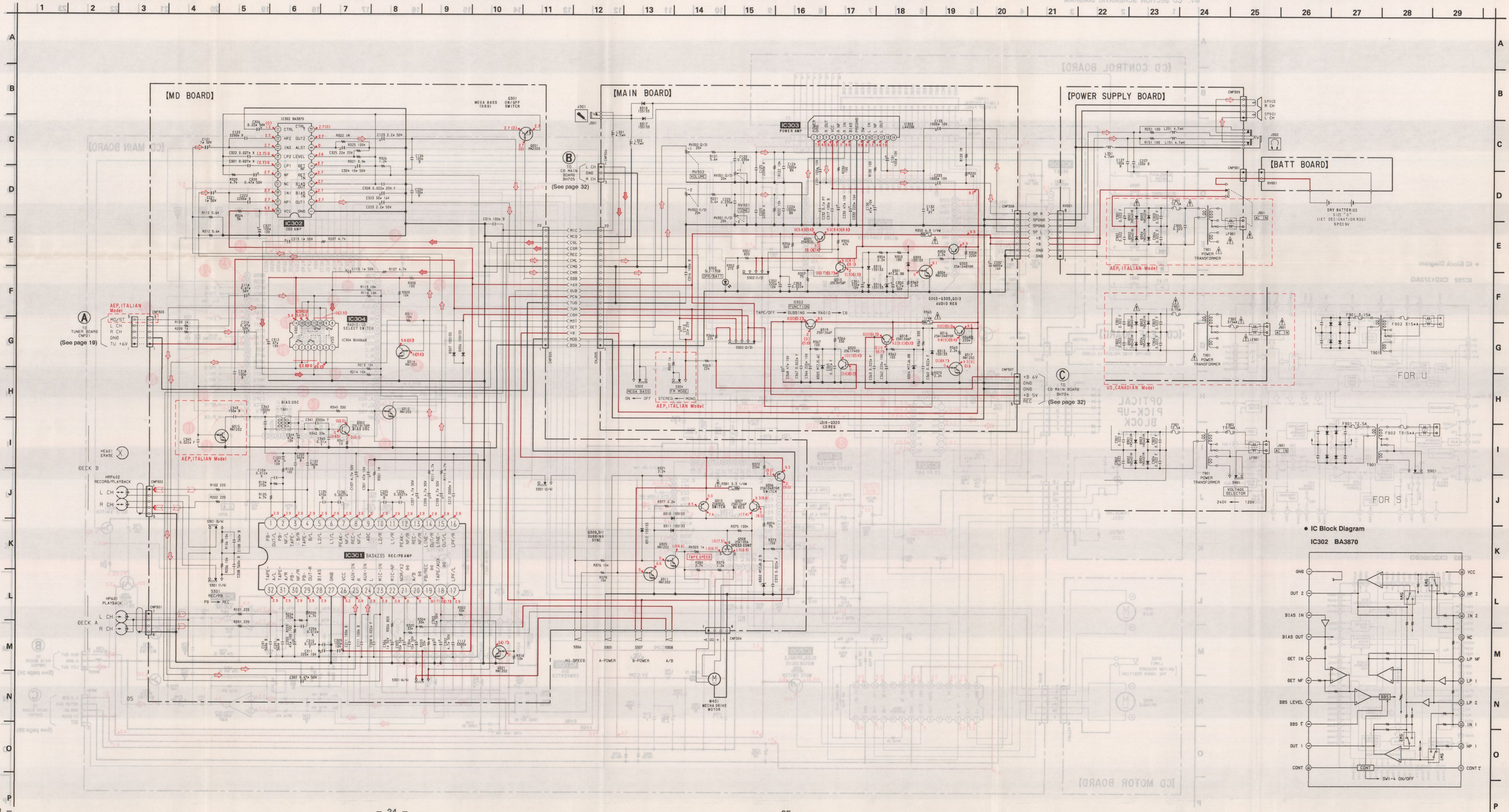

Note on Printed Wiring Board:

- ○——— : parts extracted from the component side.

Note on Schematic Diagram:

- All capacitors are in μF unless otherwise noted. pF: μμF 50 WV or less are not indicated except for electrolytics and tantalums.
- All resistors are in Ω and ¼ W or less unless otherwise specified.
- ∿∿ : fusible resistor.

Note:	Note:
The components identified by mark ⚠ or dotted line with mark ⚠ are critical for safety. Replace only with part number specified.	Les composants identifiés par une marque ⚠ sont critiques pour la sécurité. Ne les remplacer que par une pièce portant le numéro spécifié.

- ▭ : B+ Line.
- ▭ : panel designation.
- ▭ : adjustment for repair.
- Power voltage is dc 9 V and fed with regulated dc power supply from external power voltage jack.
- Voltages and waveforms are dc with respect to ground under no-signal (detuned) conditions.
  no mark : STOP
  ( ): TAPE REC
  [ ]: RADIO
  < >: MEGA BASS ON
  { }: CD PLAY
- Voltages are taken with a VOM (10 MΩ/V). Voltage variations may be noted due to normal production tolerances.
- Signal path.
  ⇨ : FM
  ⇨ : PB (DECK A)
  ⇨ : REC (DECK A)
  ⇨ : CD
- ✱ : Impossible to measure the voltage at the marked points.

● IC Block Diagram

IC302 BA3870

6-7. CD SECTION SCHEMATIC DIAGRAM

- IC Block Diagram

IC702 CXD1372AQ

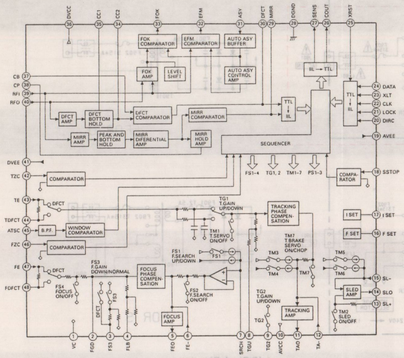

IC703 CXD2500BQ

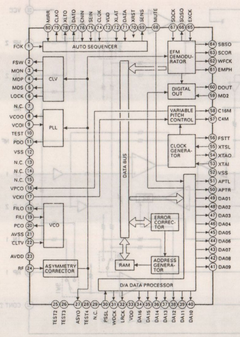

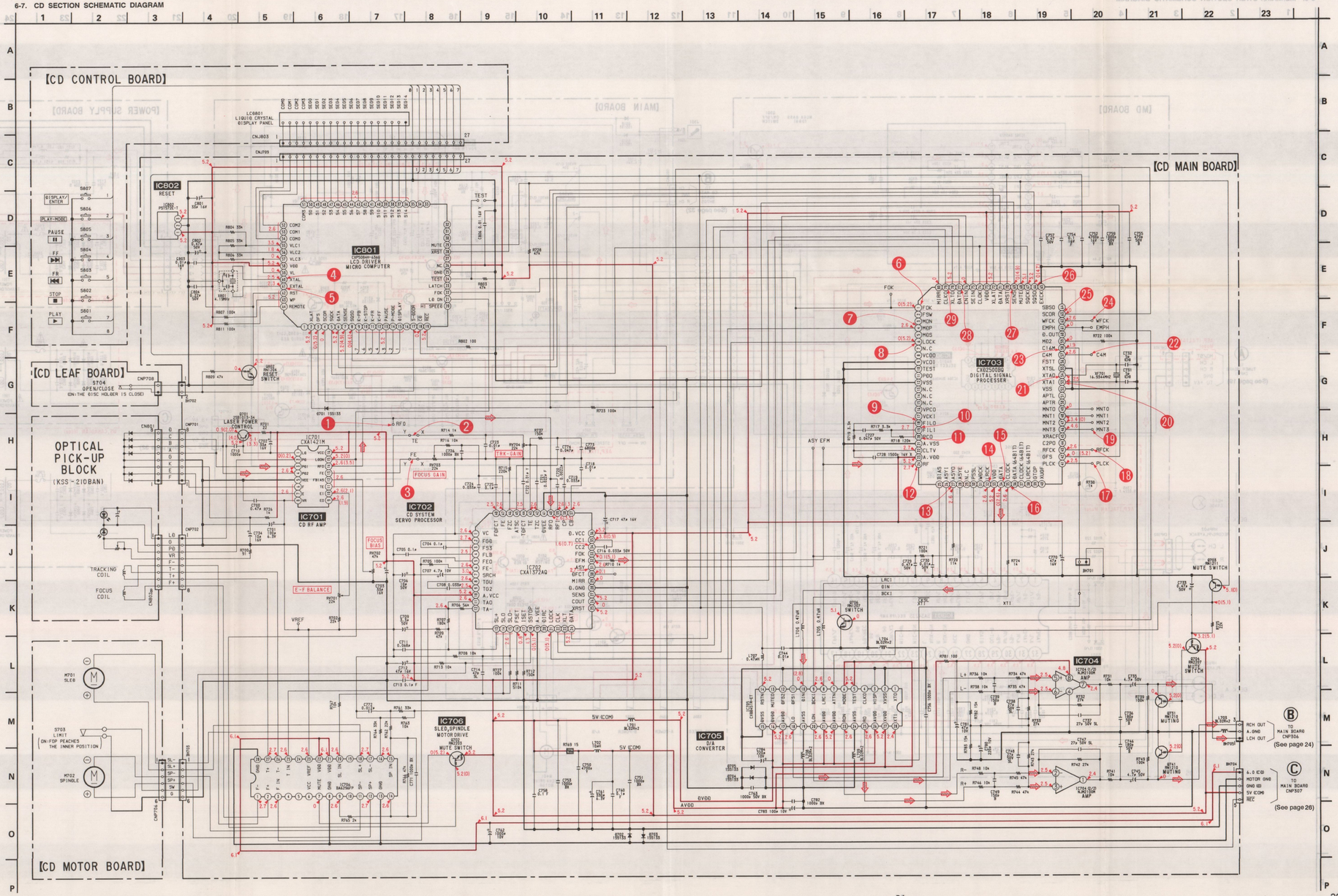

Note on Schematic Diagram:

- All capacitors are in μF unless otherwise noted. pF: μμF. 50 WV or less are not indicated except for electrolytics and tantalums.
- All resistors are in Ω and ¼ W or less unless otherwise specified.
- ⚠ : fusible resistor.

Note:	Note:
The components identified by mark ⚠ or dotted line with mark ⚠ are critical for safety. Replace only with part number specified.	Les composants identifiés par une marque ⚠ sont critiques pour la sécurité. Ne les remplacer que par une pièce portant le numéro spécifié.

- ▬▬ : B+ Line.
- ▭ : panel designation.
- ▭ : adjustment for repair.
- Power voltage is dc 9 V and fed with regulated dc power supply from external power voltage jack.
- Voltages and waveforms are dc with respect to ground under no-signal (detuned) conditions.
  no mark : STOP
  ( ) : CD PLAY
- Voltages are taken with a VOM (10 MΩ/V).
  Voltage variations may be noted due to normal production tolerances.
- Signal path.
  ⇨ : CD
- ✱ : Impossible to measure the voltage at the marked points.

6-8. CD SECTION PRINTED WIRING BOARDS

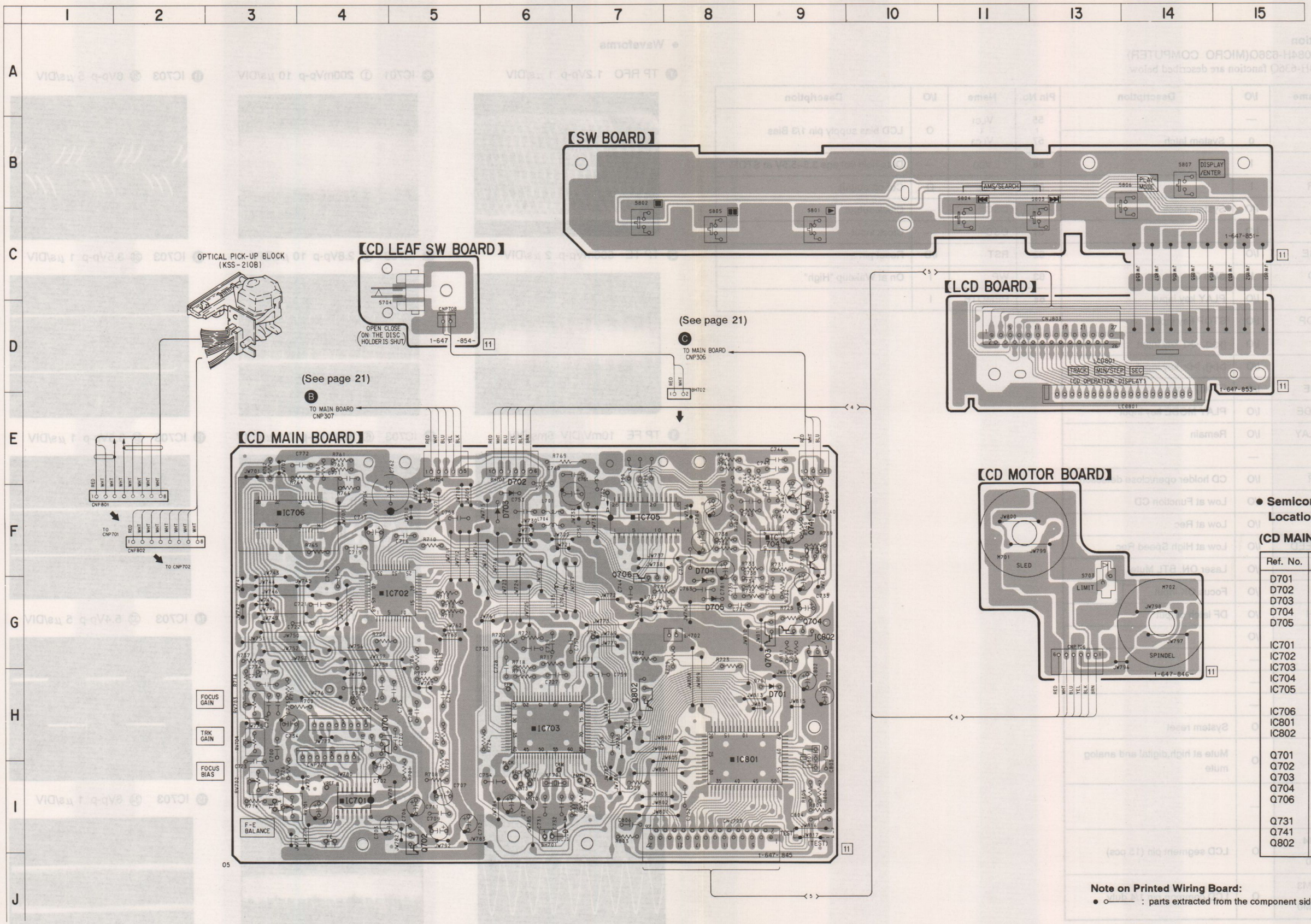

● Semiconductor Location

(CD MAIN BOARD)

Ref. No.	Location
D701	H – 9
D702	F – 6
D703	F – 6
D704	F – 8
D705	G – 8
IC701	I – 4
IC702	G – 4
IC703	H – 6
IC704	F – 8
IC705	F – 7
IC706	F – 3
IC801	I – 8
IC802	G – 9
Q701	H – 4
Q702	I – 5
Q703	G – 9
Q704	G – 9
Q706	F – 7
Q731	F – 9
Q741	F – 9
Q802	H – 7

Note on Printed Wiring Board:

● ○——— : parts extracted from the component side.

• Pin description

IC801 CXP5084H-636Q(MICRO COMPUTER)

The CXP5084H-636Q fanction are described below.

Pin No.	Name	I/O	Description
1	—	—	
2	XLT	0	System latch
3	GFS	I	
4	SCOR	I	
5	CLK	I/O	System clock
6	DATA	I/O	
7	SENSE	I/O	
8	SQSO	I	SUB Q
9	K-PB	I/O	PLAY key input
10	K-STOP	I/O	STOP key input
11	K-FR	I/O	▯◁◁, ◁◁ key input
12	K-FF	I/O	▷▷▯, ▷▷ key input
13	PAUSE	I/O	▯▯ key input
14	P-MODE	I/O	PLAY MODE key input
15	DISPLAY	I/O	Remain
16	—	—	
17	$\overline{\text{DOOR}}$	I/O	CD holder open/close detection
18	$\overline{\text{CD}}$	I/O	Low at Function CD
19	$\overline{\text{REC}}$	I/O	Low at Rec
20	$\overline{\text{HI SPEED}}$	I/O	Low at High Speed Rec
21	LD ON	I/O	Laser ON, BTL Mute
22	FOK	I/O	Focus OK input ⎍
23	LATCH	I/O	DF latch output
24	$\overline{\text{TEST}}$	I/O	
25	GND	—	
26	NC	—	
27	—	—	
28	XRST	O	System reset
29	MUTE	O	Mute at high,digital and analog mute
30 ~ 35	—	—	
36 ~ 50	S14 ~ S0	O	LCD segment pin (15 pcs)
51 ~ 54	COM3 ~ COM0	O	LCD common pin 1/4 duty

Pin No.	Name	I/O	Description
55 ~ 57	V_{LC1} ~ V_{LC3}	O	LCD bias supply pin 1/3 Bias
58	V_{DD}	—	Data hold voltage 3.5~5.5V at STOP
59	V_L	O	Cut-off output
60	OSC	—	Clock output
61	OSC	—	Clock input
62	RST	I/O	Reset pin
63	WP	I	On at Wakeup "High"
64	REMOTE	I	

• Waveforms

❶ TP RFO 1.2Vp-p 1 μs/DIV

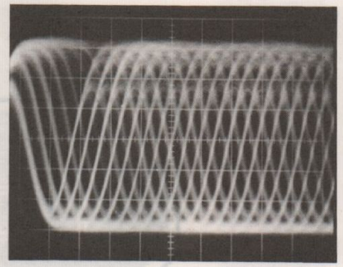

❷ TP TE 600mVp-p 2 μs/DIV

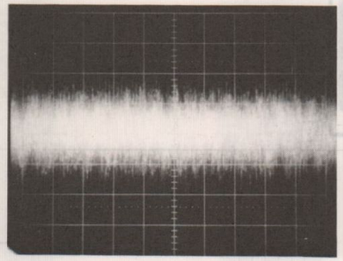

❸ TP FE 10mV/DIV 5ms/DIV

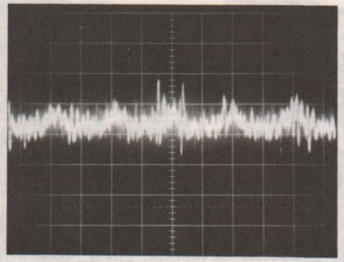

❹ IC801 ⑥⓪ 6Vp-p 0.2 μs/DIV

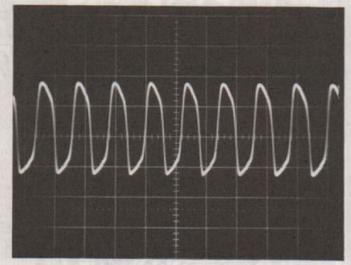

❺ IC801 ⑥① 6.5Vp-p 0.2 μs/DIV

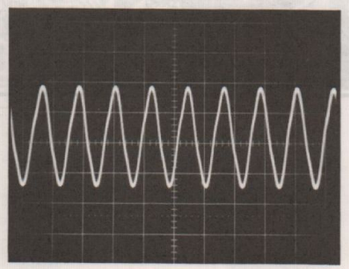

❻ IC701 ① 200mVp-p 10 μs/DIV

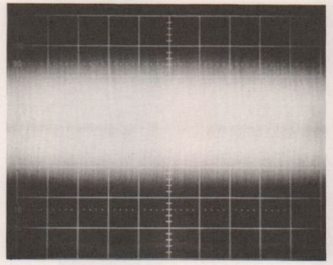

❼ IC703 ④ 2.8Vp-p 10 μs/DIV

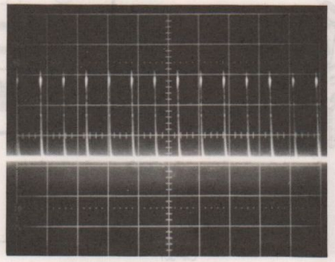

❽ IC703 ⑥ 320mVp-p 0.1 μs/DIV

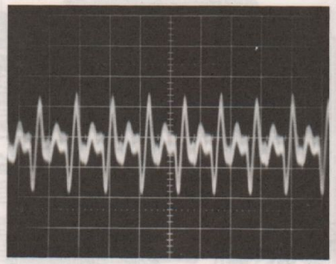

❾ IC703 ⑱ 120mVp-p 50 μs/DIV

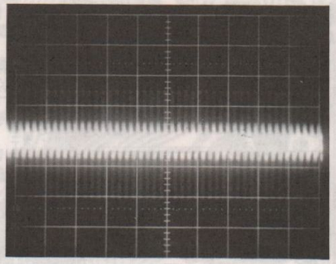

❿ IC703 ⑲ 200mVp-p 5 μs/DIV

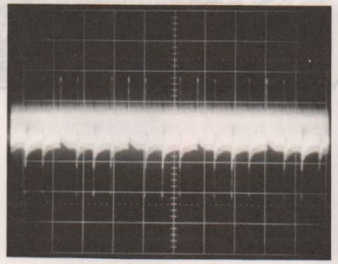

⓫ IC703 ⑳ 6Vp-p 5 μs/DIV

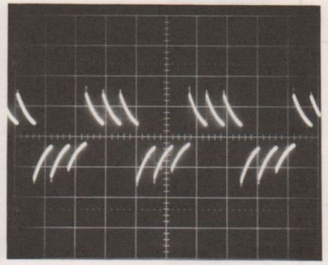

⓬ IC703 ㉔ 3.5Vp-p 1 μs/DIV

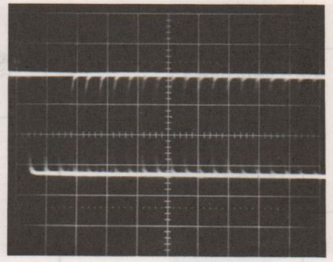

⓭ IC703 ㉗ 5.5Vp-p 1 μs/DIV

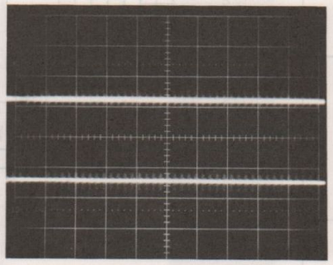

⓮ IC703 ㉜ 5.4Vp-p 5 μs/DIV

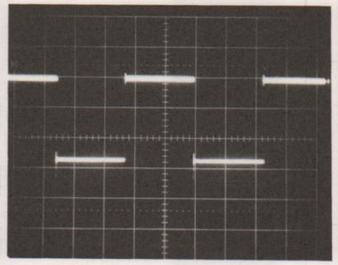

⓯ IC703 ㉞ 6Vp-p 1 μs/DIV

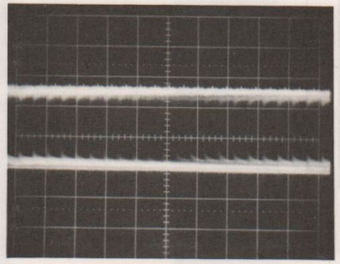

⑯ IC703 ㉟ 5.4Vp-p 0.2 μs/DIV

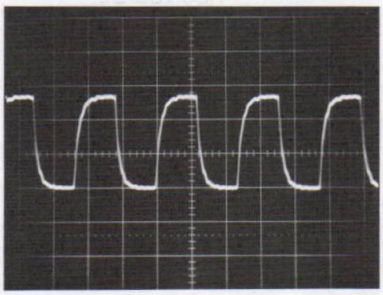

⑰ IC703 ㊶ 7Vp-p 0.1 μs/DIV

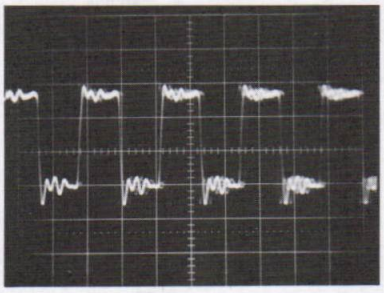

⑱ IC703 ㊸ 5.4Vp-p 50 μs/DIV

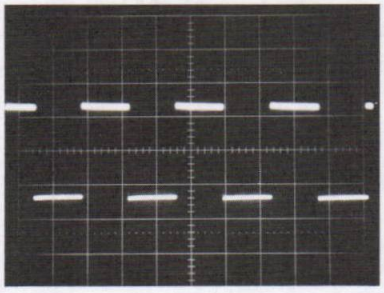

⑲ IC703 ㊻ 5.4Vp-p 50 μs/DIV

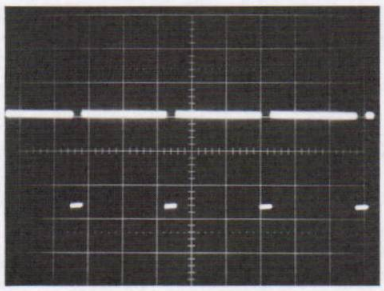

⑳ IC703 ㊸ 2.3Vp-p 0.05 μs/DIV

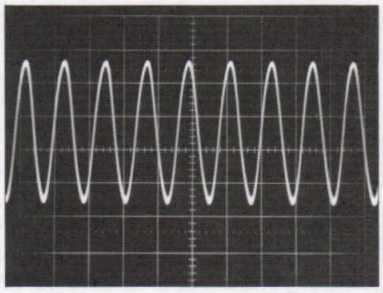

㉑ IC703 ㊹ 6.8Vp-p 0.05 μs/DIV

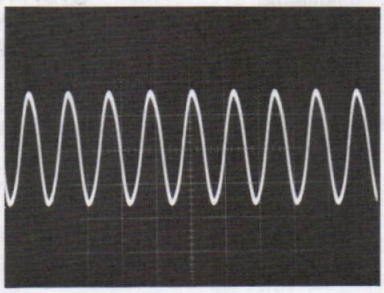

㉒ IC703 ㊼ 7Vp-p 0.1 μs/DIV

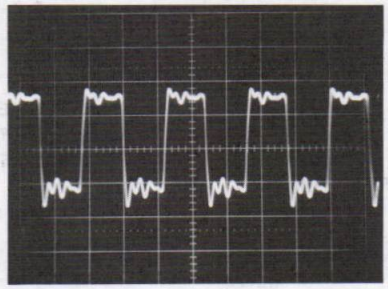

㉓ IC703 ㊽ 6.8Vp-p 0.1 μs/DIV

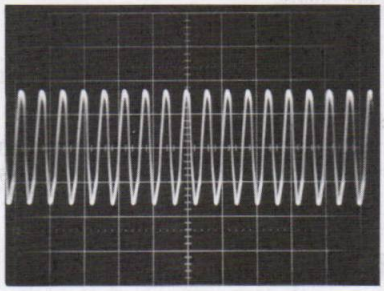

㉔ IC703 ㊷ 5.4Vp-p 50 μs/DIV

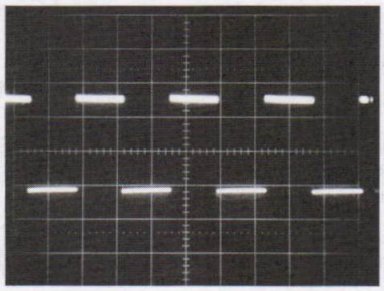

㉕ IC703 ㊸ 5.4Vp-p 50 μs/DIV

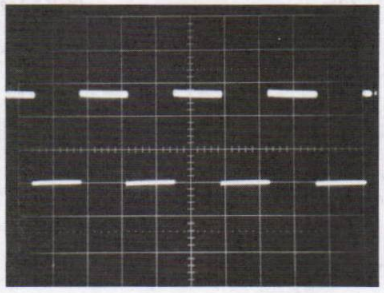

㉖ IC703 ㊻ 5.2Vp-p 5ms/DIV

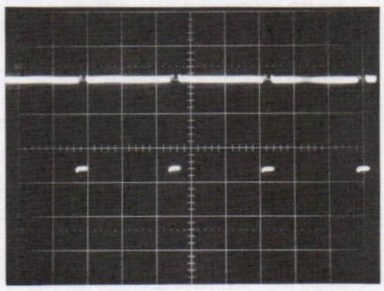

㉗ IC703 ㊾ 5.2Vp-p 5ms/DIV

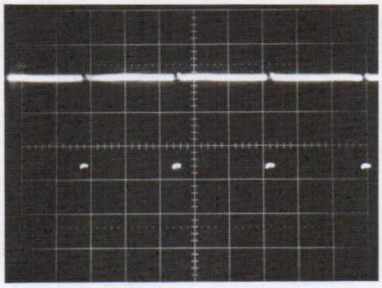

㉘ IC703 ㊼ 5Vp-p 5ms/DIV

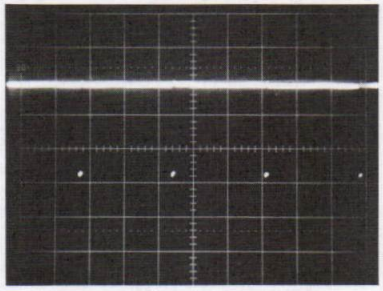

㉙ IC703 ㊾ 5.2Vp-p 5ms/DIV

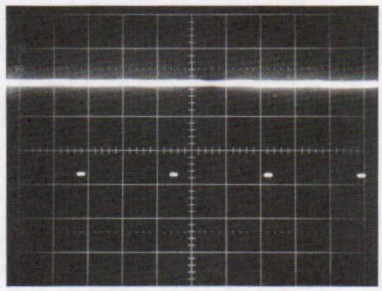

• Semiconductor Lead Layouts

BA3423S

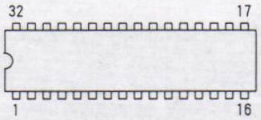

(TOP VIEW)

BA3870

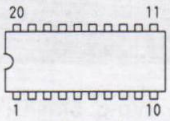

(TOP VIEW)

BA6296FP

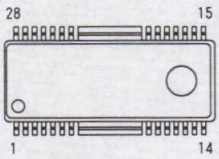

BU4066B

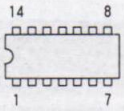

(TOP VIEW)

CXA1238S

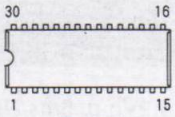

(TOP VIEW)

CXA1372AQ

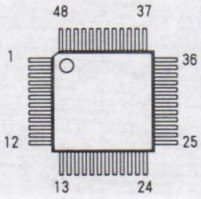

(TOP VIEW)

CXA1421M

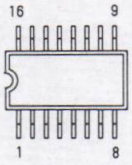

(TOP VIEW)

CXD2500BQ

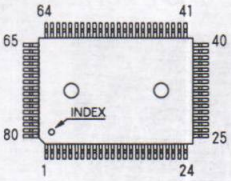

(TOP VIEW)

CXD8451M-ET

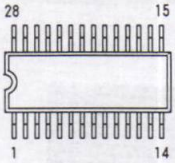

(TOP VIEW)

CXP5084H-636Q

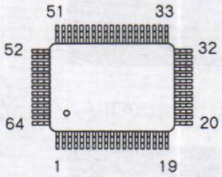

TOP VIEW

LA4598

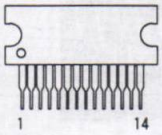

NJM2100M

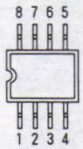

(TOP VIEW)

PST572E

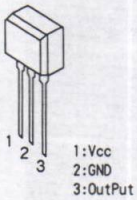

DTC114EL-TL2
DTC114ES
DTC114YL-TL2
DTC114YS
DTC124ES
RN1210
RN1211
RN2207TPE4

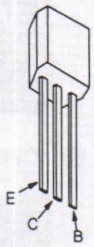

DTC144ES
2SA1175-HFE
2SC2785-HFE

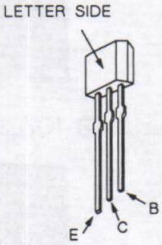

2SA952
2SB1013-4
2SC1815-GR
2SC945-P

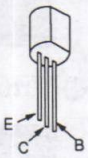

2SD1266-P

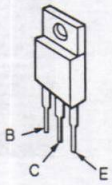

2SK104H

RD5.6ES-B2
RD6.8ES-B2
RD8.2ES-B2
1SS119

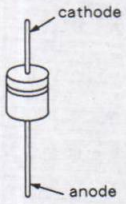

U05G

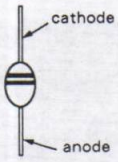

SLP-135B-55

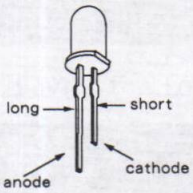

SECTION 7
EXPLODED VIEWS

NOTE :

- -XX and -X mean standardized parts, so they may have some differences from the original one.
- Color Indication of Appearance Parts
  Example:
  KNOB, BALANCE (WHITE) ..... (RED)
  ↑ Parts color ↑ Cabinet's color
- Items marked "*" are not stocked since they are seldom required for routine service. Some delay should be anticipated when ordering these items.
- The mechanical parts with no reference number in the exploded views are not supplied.
- Hardware (#mark) list is given in the last of this parts list.

The components identified by mark ⚠ or dotted line with mark ⚠ are critical for safety.
Replace only with part number specified.

Les composants identifiés par une marque ⚠ sont critiques pour la sécurité.
Ne les remplacer que par une pièce portant le neméro spécifié.

(1) FRONT CABINET ASSEMBLY SECTION

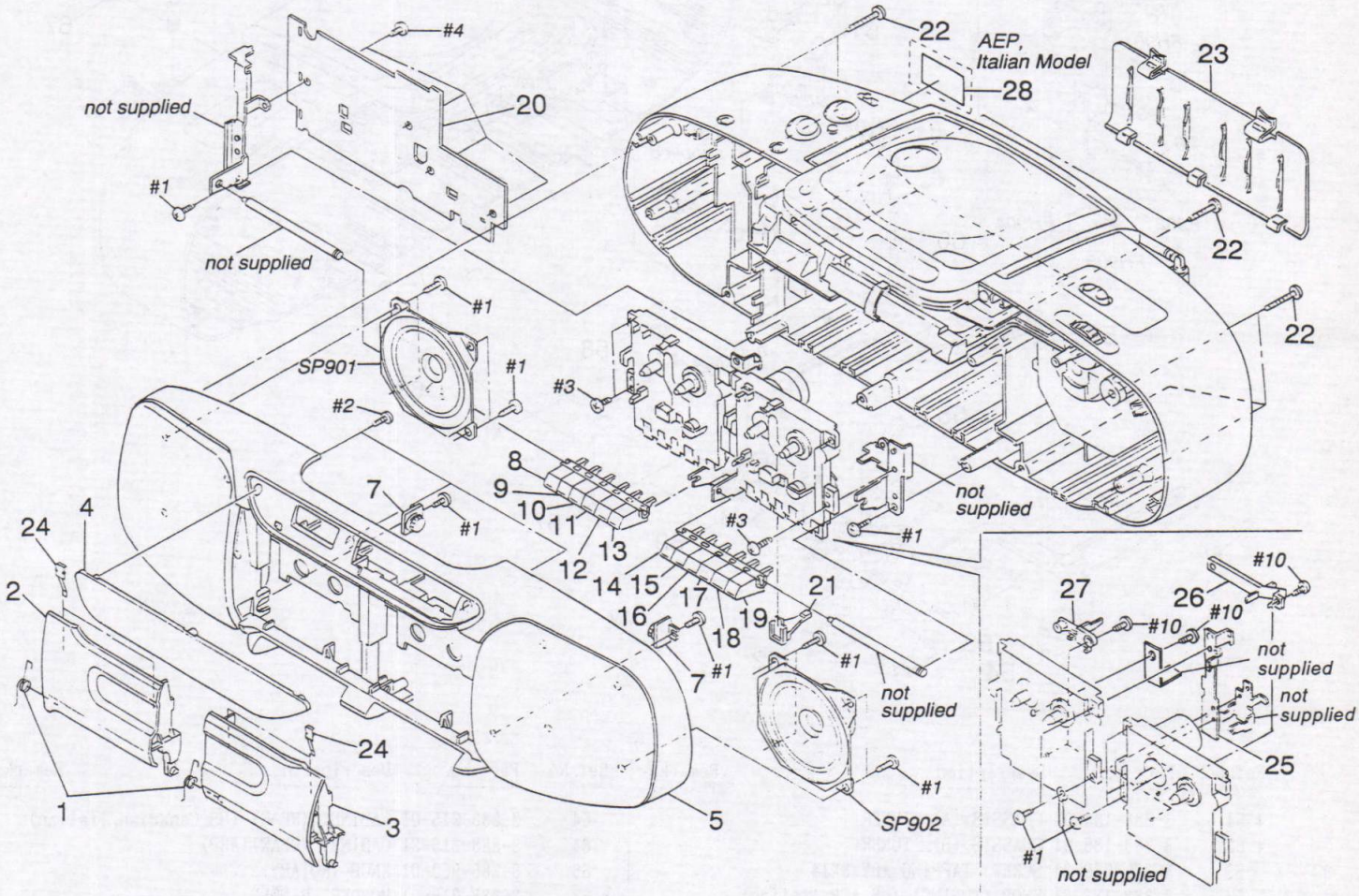

Ref. No.	Part No.	Description	Remarks
1	3-388-196-01	SPRING, CASSETTE OPEN	
2	A-3263-586-A	HOLDER (L) ASSY, CASSETTE	
3	A-3263-587-A	HOLDER (R) ASSY, CASSETTE	
4	3-388-194-01	PANEL (US, Canadian)	
4	3-388-194-11	PANEL (AEP)	
4	3-388-194-21	PANEL (Italian)	
5	X-3366-599-1	CABINET (FRONT) SUB ASSY	
7	3-351-377-11	DAMPER	
8	3-388-177-01	BUTTON (S/E-A), MD	
9	3-388-182-01	BUTTON (HSD-A), MD	
10	3-388-180-01	BUTTON (PLAY-A), MD	
11	3-388-179-01	BUTTON (REW-A), MD	
12	3-388-178-01	BUTTON (FF-A), MD	
13	3-388-181-01	BUTTON (PAUSE-A), MD	
14	3-388-165-01	BUTTON (S/E-B), MD	
15	3-388-170-01	BUTTON (REC-B), MD	
16	3-388-168-01	BUTTON (PLAY-B), MD	
17	3-388-167-01	BUTTON (REW-B), MD	
18	3-388-166-01	BUTTON (FF-B), MD	
19	3-388-169-01	BUTTON (PAUSE-B), MD	
* 20	A-3264-358-A	MD BOARD, COMPLETE (US, Canadian)	
* 20	A-3264-631-A	MD BOARD, COMPLETE (AEP, Italian)	
* 21	3-389-274-01	LEVER, PLAY	
22	3-325-679-31	SCREW, TAPPING +BV 3X14	
23	3-368-522-01	LID, BATTERY CASE	
24	3-308-823-11	SPRING	
25	3-380-160-01	JOINT (MD)	
* 26	3-380-451-01	LEVER (REC)	
* 27	3-380-452-01	LEVER (MD-B)	
* 28	4-941-548-01	LABEL, CLASS (1) (AEP, Italian)	
SP901	1-504-269-21	SPEAKER (10CM)	
SP902	1-504-269-21	SPEAKER (10CM)	

(2) REAR CABINET ASSEMBLY SECTION

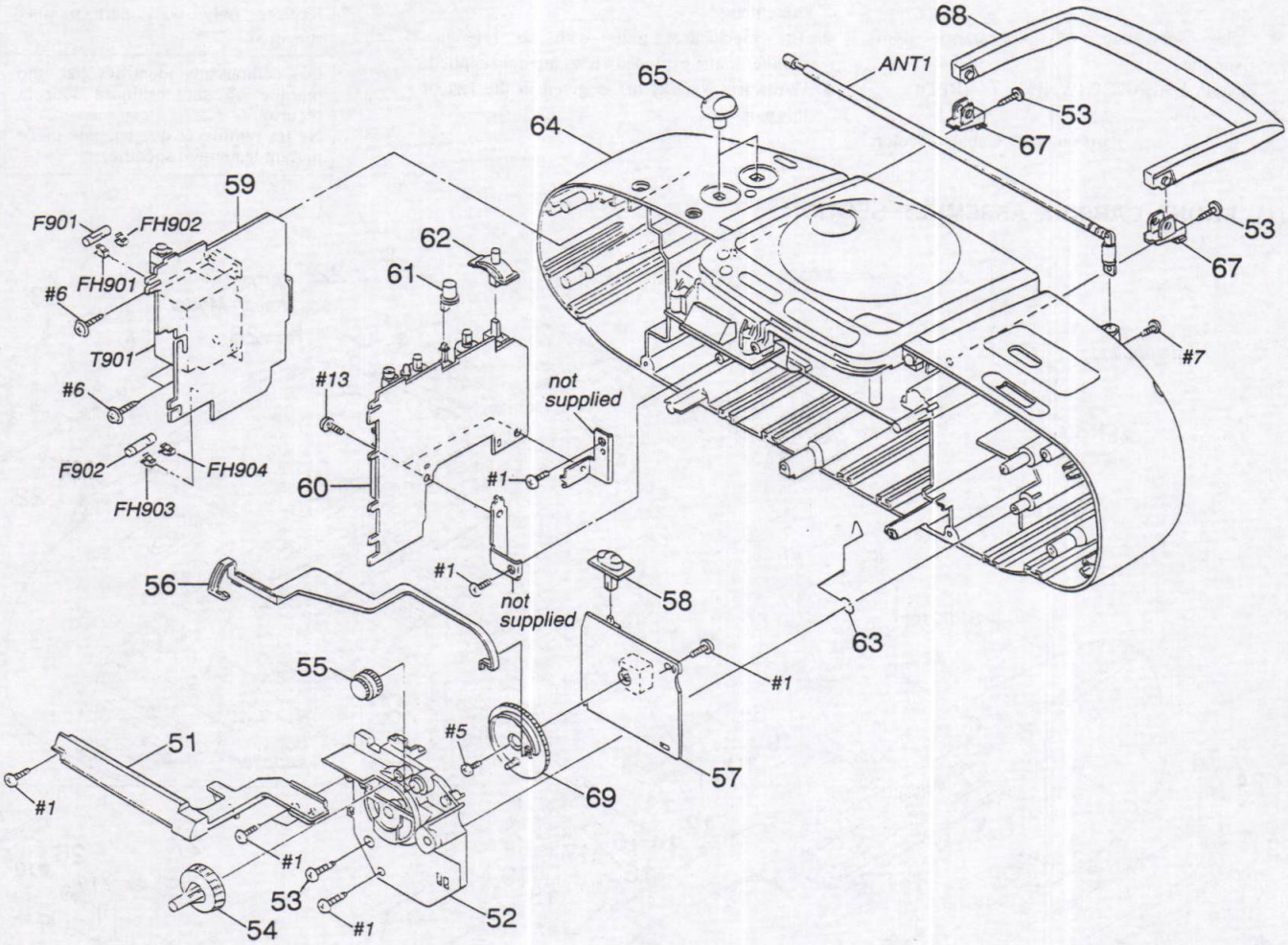

Ref. No.	Part No.	Description	Remarks
* 51	3-388-184-01	CHASSIS (A), TUNER	
* 52	3-388-185-01	CHASSIS (B), TUNER	
53	3-325-679-31	SCREW, TAPPING +BV 3X14	
54	3-388-183-01	KNOB (TUNING) (US, AEP, Italian)	
* 55	3-388-187-01	GEAR, MIDWAY	
56	3-388-186-01	POINTER	
* 57	A-3264-641-A	TUNER BOARD, COMPLETE (US, Canadian)	
* 57	A-3264-715-A	TUNER BOARD, COMPLETE (AEP)	
* 57	A-3264-815-A	TUNER BOARD, COMPLETE (Italian)	
58	3-388-188-01	KNOB (2 BAND)	
* 59	1-647-848-11	POWER BOARD	
* 60	A-3264-359-A	MAIN BOARD, COMPLETE (US, Canadian)	
* 60	A-3264-633-A	MAIN BOARD, COMPLETE (AEP, Italian)	
61	3-386-946-01	BUTTON (DBB)	
62	3-388-164-01	KNOB (FUNCTION)	
* 63	3-389-272-01	TERMINAL, ANTENNA	
64	3-388-215-01	CABINET (REAR) (US, Canadian, Italian)	
64	3-388-215-21	CABINET (REAR) (AEP)	
65	3-386-950-01	KNOB (ROTARY)	
* 67	3-388-216-01	HOLDER, HANDLE	
68	X-3366-600-1	HANDLE ASSY	
69	3-388-189-01	GEAR, TUNING CAPACITOR	
ANT1	1-501-515-11	ANTENNA, TELESCOPIC	
⚠F901	1-532-735-11	FUSE (3.15A) (US, Canadian)	
⚠F901	1-532-286-00	FUSE (T2.5A) (AEP, Italian)	
⚠F902	1-576-107-11	FUSE (315mA) (US, Canadian)	
FH901	1-533-217-31	HOLDER, FUSE	
FH902	1-533-217-31	HOLDER, FUSE	
FH903	1-533-217-31	HOLDER, FUSE (US, Canadian)	
FH904	1-533-217-31	HOLDER, FUSE (US, Canadian)	
⚠T901	1-450-515-11	TRANSFORMER, POWER (US, Canadian)	
⚠T901	1-450-517-11	TRANSFORMER, POWER (AEP, Italian)	

Note: The components identified by mark ⚠ or dotted line with mark ⚠ are critical for safety.
Replace only with part number specified.

Note: Les composants identifiés par une marque ⚠ sont critiques pour la sécurité.
Ne les remplacer que par une pièce portant le neméro spécifié.

(3) CD ASSEMBLY SECTION

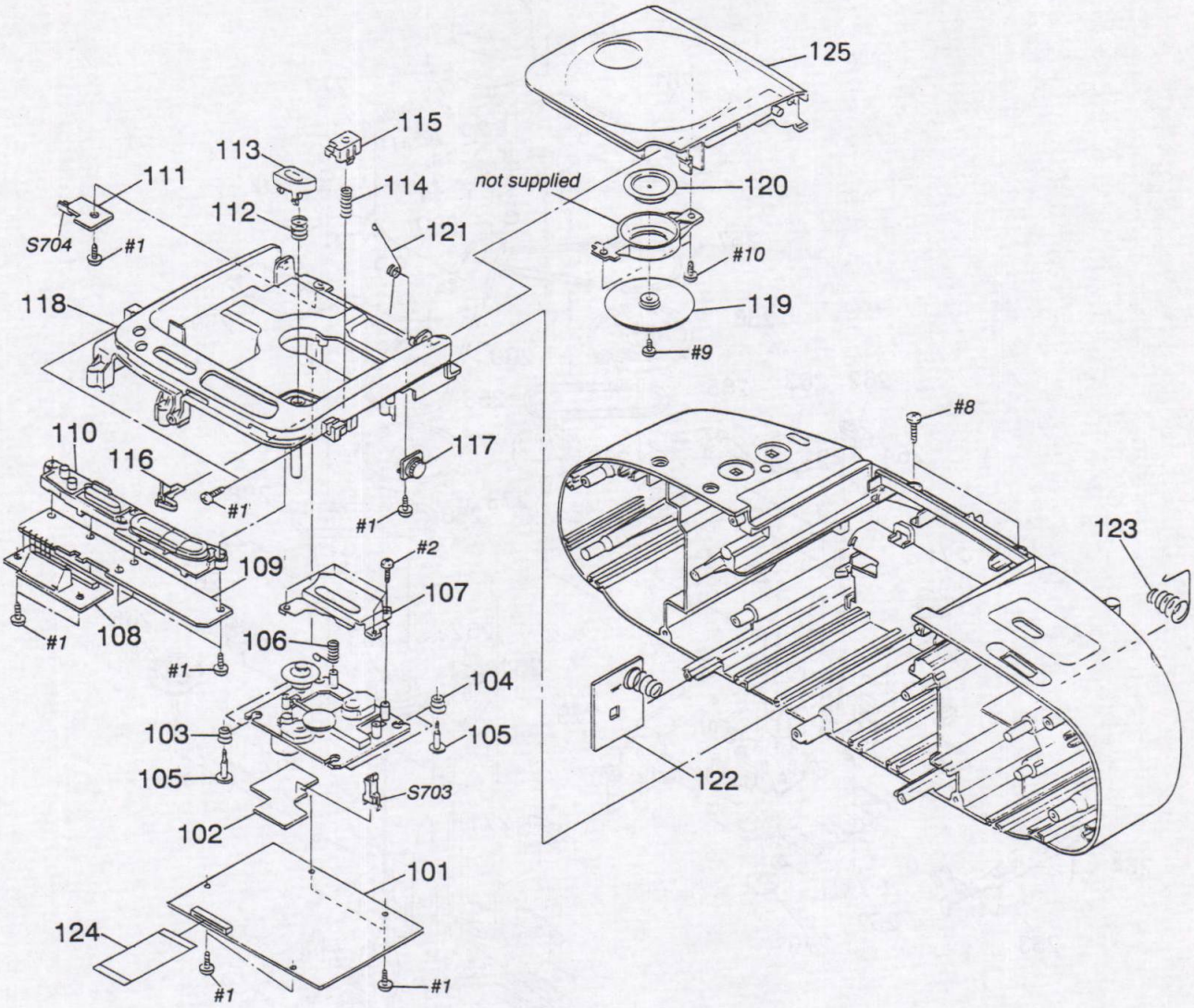

Ref. No.	Part No.	Description	Remarks
* 101	A-3264-357-A	CD MAIN BOARD, COMPLETE	
* 102	1-647-846-11	CD MOTOR BOARD	
103	4-922-858-11	DAMPER (GREEN)	
104	4-922-858-01	DAMPER (PINK)	
105	4-931-373-01	SCREW, CD FITTING	
106	4-931-358-01	SPRING	
107	4-928-936-01	COVER, CD	
* 108	1-647-853-11	LCD BOARD	
* 109	1-647-851-11	SWITCH BOARD	
110	3-388-210-01	BUTTON (CD)	
* 111	1-647-854-11	LEAF SWITCH BOARD	
112	3-388-204-01	SPRING (CD OPEN BUTTON)	
113	3-388-205-01	BUTTON (CD OPEN)	
114	3-388-206-01	SPRING (CD LIFT)	
* 115	3-388-202-01	LEVER, CD LIFT	
* 116	3-388-203-01	CLAW, LOCK	
117	3-351-377-11	DAMPER	
118	3-388-201-01	CABINET (UPPER)	
119	3-704-435-01	PLATE (M), CHUCK	
120	1-452-531-11	MAGNET	
121	3-388-211-01	SPRING (CD OPEN)	
* 122	1-647-847-11	BATTERY TERMINAL BOARD	
123	3-368-494-01	SPRING (+,-), BATTERY COIL	
124	1-751-445-11	WIRE, PARALLEL (FFC) (27 CORE)	
125	A-3300-118-A	HOLDER SUB ASSY (CD)	
S703	1-571-936-11	SWITCH, LEAF (LIMIT)	
S704	1-570-013-11	SWITCH, LEAF (OPEN/CLOSE)	

(4) TAPE TRANSPORT MECHANISM-1 (MF-W308-64)

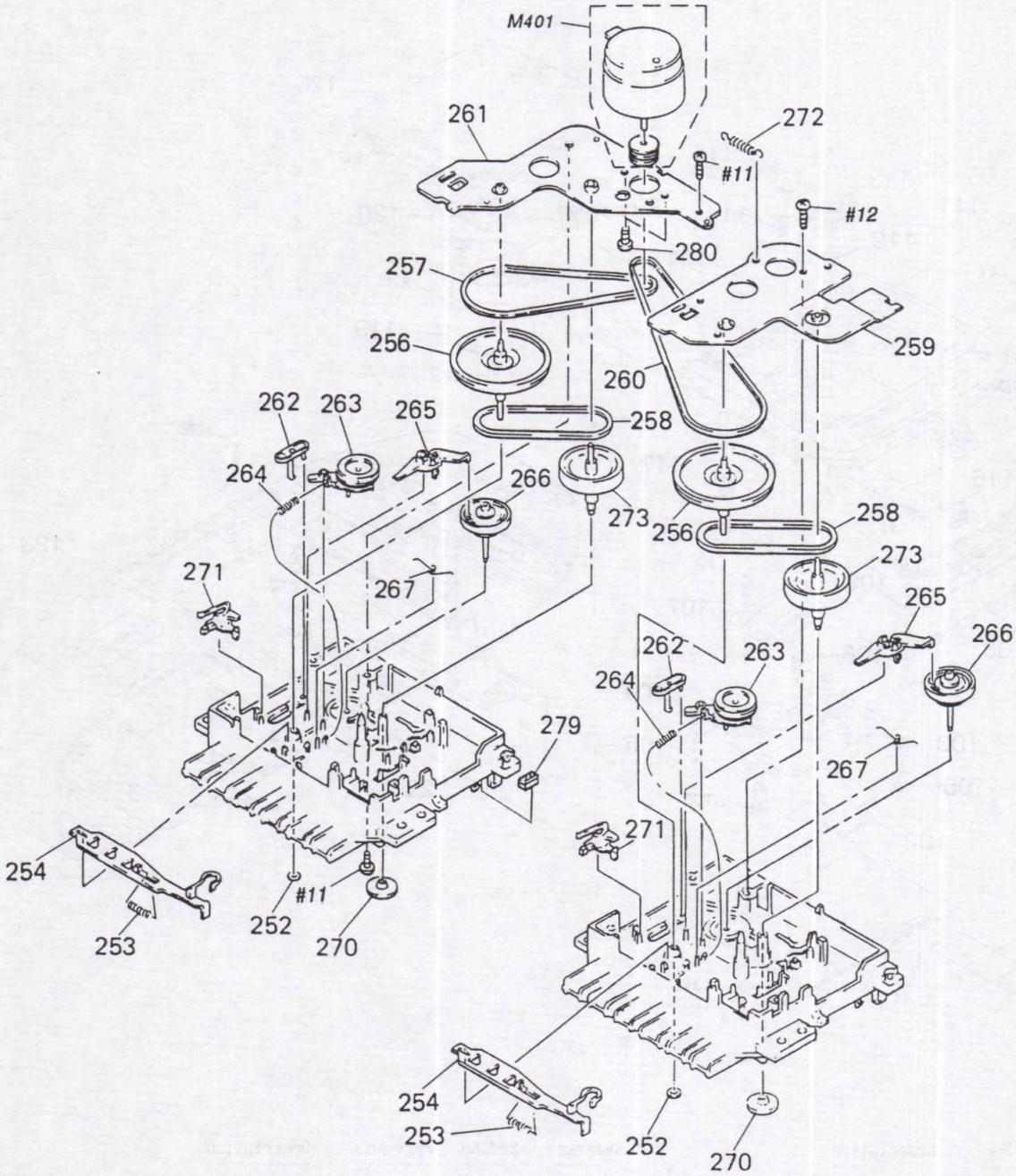

Ref. No.	Part No.	Description	Remarks
252	3-343-358-01	RING, RETAINING	
253	4-932-656-01	SPRING, COMPRESSION	
254	4-928-996-11	LEVER, SW	
256	X-4920-923-1	WHEEL (W) ASSY, CAPSTAN	
257	3-369-312-01	BELT (59X1)	
258	4-928-974-01	BELT (MIDWAY)	
* 259	X-4918-598-1	PLATE ASSY, GROUND	
260	3-378-419-01	BELT	
261	X-4920-921-1	PLATE (W) ASSY, GROUND	
262	4-928-961-01	PLATE, PAUSE LOCK	
263	X-4920-346-1	LEVER (S) ASSY, IDLER	
264	3-905-168-01	SPRING, COMPRESSION	
265	4-928-986-01	LEVER (S), SHUT-OFF	
266	X-4918-582-1	PLATE ASSY, TAKE-UP REEL	
267	4-928-958-01	SPRING, FR RETURN	
270	4-928-967-01	GEAR (C), MIDWAY	
271	4-928-987-01	LEVER (T), SHUT-OFF	
272	3-378-420-01	SPRING, TENSION	
273	X-4920-922-1	PULLEY (W) ASSY, FR	
279	4-934-522-01	CUSHION	
280	3-343-251-01	SCREW (M2.6X2.5)	
M401	X-4920-924-1	MOTOR ASSY (REEL/CAPSTAN)	

(5) TAPE TRANSPORT MECHANISM-2 (MF-W308-64)

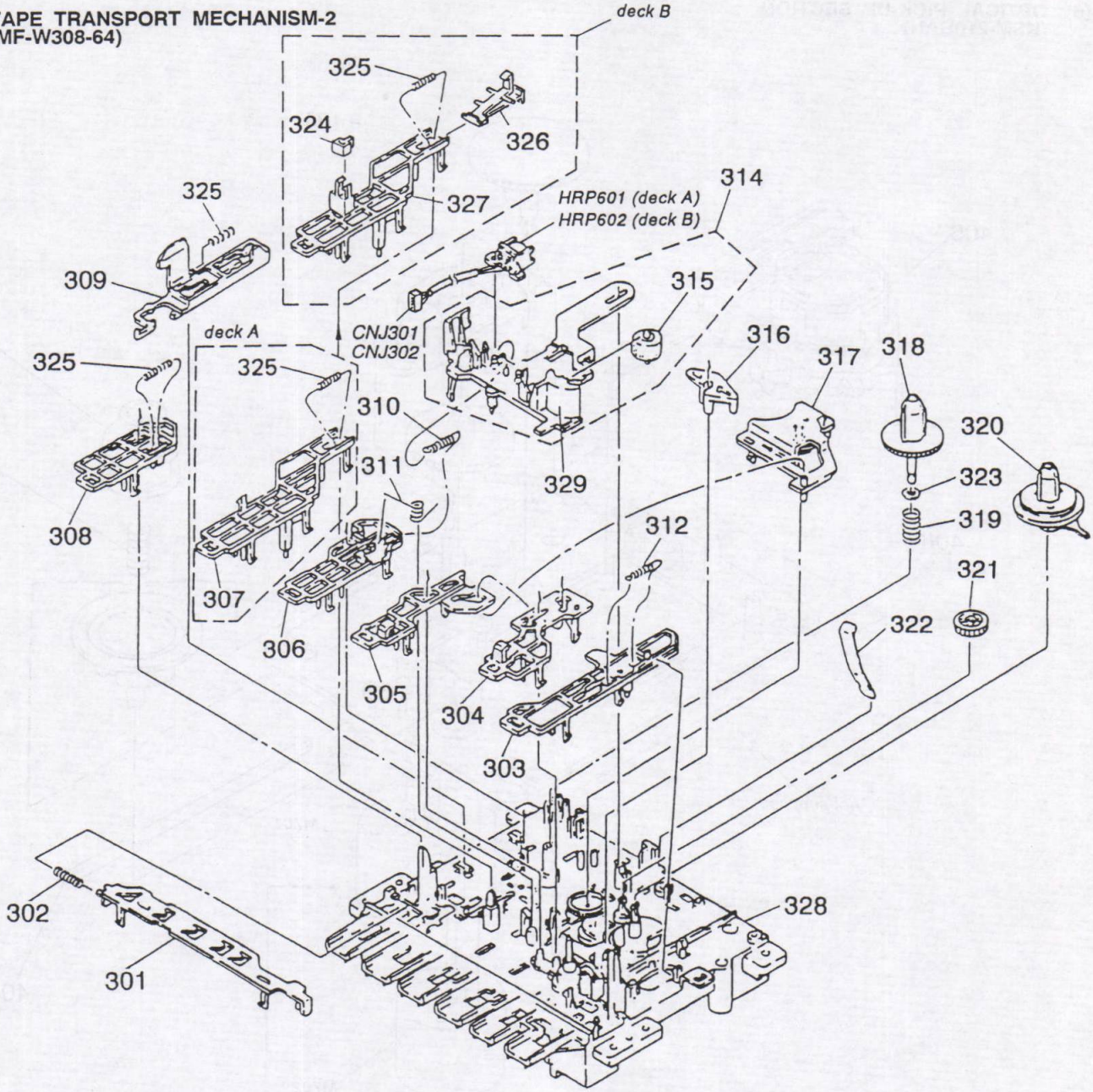

Ref. No.	Part No.	Description	Remarks
301	4-932-695-01	SLIDER (FR), LOCK	
302	4-932-656-01	SPRING, COMPRESSION	
303	4-928-994-01	LEVER, PAUSE	
304	4-928-993-01	LEVER, FF	
305	4-928-992-01	LEVER, REW	
306	4-928-991-01	LEVER, PLAY	
307	4-921-195-01	LEVER (AC), REC	
308	4-928-985-11	LEVER, STOP	
309	4-936-206-01	SLIDER (S), EJECT	
310	4-928-972-01	SPRING, TENSION	
311	4-928-973-01	SPRING	
312	3-313-372-01	SPRING, TENSION	
314	9-910-999-38	HEAD (BASE) (S) ASSY	
315	4-928-962-01	PINCH ROLLER	
316	4-928-982-01	LEVER (C)	
317	X-4920-347-1	LEVER (S) ASSY, FR	
318	4-928-978-01	GEAR (C), SUPPLY REEL	
319	3-343-381-01	SPRING, COMPRESSION	
320	X-4920-350-1	GEAR (S) ASSY, T REEL	
321	3-343-285-01	GEAR, FF	
322	4-928-957-01	RETAINER, CASSETTE	
323	4-931-795-11	WASHER	
324	1-543-876-13	HEAD (ERASE)	
325	4-932-648-01	SPRING, COMPRESSION	
326	4-928-960-02	CLAW, SAFETY	
327	4-934-511-01	LEVER (S), REC	
328	X-4920-348-1	CHASSIS (S) ASSY, MECHANICAL	
329	4-928-998-01	DECK (S), HEAD	
* CNJ301	1-691-561-11	HOUSING, CONNECTOR 4P (DECK-A)	
* CNJ302	1-691-562-11	HOUSING, CONNECTOR 5P (DECK-B)	
HRP601	1-543-628-11	HEAD, MAGNETIC (REC/PB) (DECK-A)	
HRP602	1-543-714-11	HEAD, MAGNETIC (REC/PB) (DECK-B)	

(6) OPTICAL PICK-UP SECTION (KSM-210BAN)

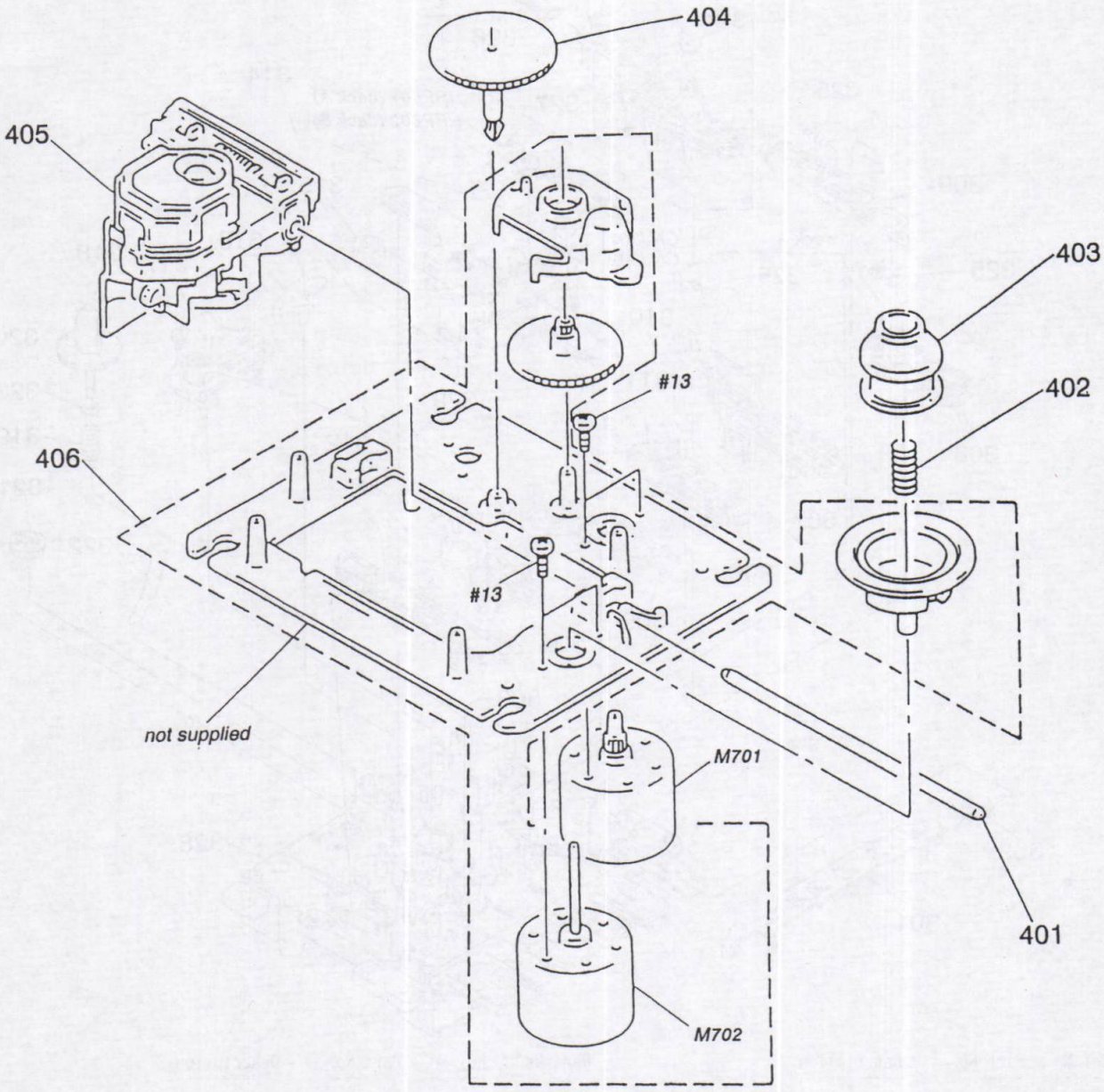

Ref. No.	Part No.	Description	Remarks
401	4-917-565-01	SHAFT, SLED	
402	2-625-191-01	SPRING, COMPRESSION	
403	2-625-186-01	RING (C), CENTER	
404	2-625-188-02	GEAR (A)	
⚠405	8-848-137-11	PICK-UP, OPTICAL KSS-210B	
406	X-2625-133-2	CHASSIS ASSY, TT (WITH M702 SPINDLE) (SPINDLE)	
M701	X-2625-132-1	GEAR ASSY, MOTOR (SLED)	

Note: The components identified by mark ⚠ or dotted line with mark ⚠ are critical for safety.
Replace only with part number specified.

Note: Les composants identifiés par une marque ⚠ sont critiques pour la sécurité.
Ne les remplacer que par une pièce portant le neméro spécifié.

SECTION 8
ELECTRICAL PARTS LIST

BATTERY TERMINAL

CD MAIN

- Due to standardization, replacements in the parts list may be different from the parts specified in the diagrams or the components used on the set.
- -XX and -X mean standardized parts, so they may have some differences from the original one.
- RESISTORS
  All resistors are in ohms.
  METAL:Metal-film resistor.
  METAL OXIDE:Metal Oxide-film resistor.
  F:nonflammable
- Items marked "*" are not stocked since they are seldom required for routine service. Some delay should be anticipated when ordering these items.
- SEMICONDUCTORS
  In each case, u: μ , for example:
  uA.... :μA...., uPA.... :μPA....,
  uPB.... :μPB...., uPC.... :μPC....,
  uPD.... :μPD....
- CAPACITORS
  uF: μF
- COILS
  uH: μH

The components identified by mark ⚠ or dotted line with mark ⚠ are critical for safety.
Replace only with part number specified.

Les composants identifiés par une marque ⚠ sont critiques pour la sécurité.
Ne les remplacer que par une pièce portant le neméro spécifié.

When indicating parts by reference number, please include the board name.

Ref. No.	Part No.	Description			Remarks
*	1-647-847-11	BATTERY TERMINAL BOARD			
		**********			
	3-389-273-01	SPRING (-), BATTERY COIL			
**********					
*	A-3264-357-A	CD MAIN BOARD, COMPLETE			
		**********			
		< CAPACITOR >			
C700	1-136-173-00	FILM	0.47uF	5%	50V
C701	1-124-443-00	ELECT	100uF	20%	10V
C702	1-124-034-51	ELECT	33uF	20%	16V
C703	1-124-034-51	ELECT	33uF	20%	16V
C704	1-136-165-00	FILM	0.1uF	5%	50V
C705	1-136-165-00	FILM	0.1uF	5%	50V
C706	1-124-907-11	ELECT	10uF	20%	50V
C707	1-131-375-00	TANTALUM	4.7uF	10%	10V
C708	1-130-489-00	MYLAR	0.033uF	5%	50V
C709	1-123-382-00	ELECT	3.3uF	20%	100V
C710	1-162-294-31	CERAMIC	0.001uF	10%	50V
C711	1-130-493-00	MYLAR	0.068uF	5%	50V
C712	1-124-477-11	ELECT	47uF	20%	25V
C713	1-162-851-11	CERAMIC	0.1uF		16V
C714	1-162-215-31	CERAMIC	47PF	5%	50V
C716	1-130-489-00	MYLAR	0.033uF	5%	50V
C717	1-124-477-11	ELECT	47uF	20%	25V
C718	1-162-306-11	CERAMIC	0.01uF	20%	16V
C719	1-130-489-00	MYLAR	0.033uF	5%	50V
C720	1-130-475-00	MYLAR	0.0022uF	5%	50V
C721	1-161-494-00	CERAMIC	0.022uF		25V
C722	1-162-306-11	CERAMIC	0.01uF	20%	16V
C723	1-162-306-11	CERAMIC	0.01uF	20%	16V
C724	1-130-489-00	MYLAR	0.033uF	5%	50V
C725	1-136-165-00	FILM	0.1uF	5%	50V
C726	1-162-294-31	CERAMIC	0.001uF	10%	50V
C727	1-130-491-00	MYLAR	0.047uF	5%	50V
C728	1-161-374-11	CERAMIC	0.0015uF	20%	50V
C729	1-136-173-00	FILM	0.47uF	5%	50V
C730	1-162-306-11	CERAMIC	0.01uF	20%	16V
C731	1-102-942-00	CERAMIC	5.0PF	+-0.5PF	50V
C732	1-102-942-00	CERAMIC	5.0PF	+-0.5PF	50V
C733	1-124-902-00	ELECT	0.47uF	20%	50V
C734	1-126-157-11	ELECT	10uF	20%	16V
C735	1-124-927-11	ELECT	4.7uF	20%	100V
C736	1-162-285-31	CERAMIC	180PF	10%	50V
C737	1-162-209-31	CERAMIC	27PF	5%	50V
C738	1-162-209-31	CERAMIC	27PF	5%	50V
C739	1-162-284-31	CERAMIC	150PF	10%	50V
C744	1-162-306-11	CERAMIC	0.01uF	20%	16V
C745	1-124-927-11	ELECT	4.7uF	20%	100V
C746	1-162-285-31	CERAMIC	180PF	10%	50V
C747	1-162-209-31	CERAMIC	27PF	5%	50V
C748	1-162-209-31	CERAMIC	27PF	5%	50V
C749	1-162-284-31	CERAMIC	150PF	10%	50V
C750	1-162-294-31	CERAMIC	0.001uF	20%	50V
C751	1-162-294-31	CERAMIC	0.001uF	20%	50V
C752	1-161-377-00	CERAMIC	0.0047uF	20%	16V
C753	1-162-294-31	CERAMIC	0.001uF	20%	50V
C754	1-162-851-11	CERAMIC	0.1uF		16V
C755	1-162-290-31	CERAMIC	470PF	10%	50V
C756	1-162-294-31	CERAMIC	0.001uF	20%	50V
C757	1-136-173-00	FILM	0.47uF	5%	50V
C758	1-162-851-11	CERAMIC	0.1uF		16V
C759	1-162-294-31	CERAMIC	0.001uF	10%	50V
C760	1-162-851-11	CERAMIC	0.1uF		16V
C761	1-124-442-00	ELECT	330uF	20%	6.3V
C762	1-124-473-11	ELECT	1000uF	20%	10V
C763	1-162-294-31	CERAMIC	0.001uF	10%	50V
C770	1-124-477-11	ELECT	47uF	20%	25V
C771	1-162-294-31	CERAMIC	0.001uF	10%	50V
C772	1-130-484-00	MYLAR	0.012uF	5%	50V
C773	1-161-329-00	CERAMIC	0.0068uF	20%	16V
C774	1-130-491-00	MYLAR	0.047uF	5%	50V
C780	1-126-176-11	ELECT	220uF	20%	10V
C781	1-124-126-00	ELECT	47uF	20%	10V
C782	1-162-294-31	CERAMIC	0.001uF	20%	50V
C783	1-124-443-00	ELECT	100uF	20%	10V
C784	1-126-176-11	ELECT	220uF	20%	10V
C801	1-124-034-51	ELECT	33uF	20%	16V
C802	1-124-902-00	ELECT	0.47uF	20%	50V

CD MAIN

Ref. No.	Part No.	Description				Remarks
C803	1-162-306-11	CERAMIC	0.01uF	20%	16V	
C804	1-136-169-00	FILM	0.22uF	5%	50V	
C806	1-162-306-11	CERAMIC	0.01uF	20%	16V	
		< CONNECTOR >				
* CNP701	1-564-710-11	PIN, CONNECTOR (SMALL TYPE) 8P				
* CNP702	1-564-710-11	PIN, CONNECTOR (SMALL TYPE) 8P				
* CNJ709	1-569-919-11	SOCKET, CONNECTOR 27P				
		< DIODE >				
D701	8-719-911-19	DIODE	1SS119			
D702	8-719-911-19	DIODE	1SS119			
D703	8-719-911-19	DIODE	1SS119			
D704	8-719-911-19	DIODE	1SS119			
D705	8-719-911-19	DIODE	1SS119			
		< IC >				
IC701	8-752-039-03	IC	CXA1421M			
IC702	8-752-058-77	IC	CXA1372AQ			
IC703	8-752-352-93	IC	CXD2500BQ			
IC704	8-759-710-55	IC	NJM2100M			
IC705	8-759-093-98	IC	CXD8451M			
IC706	8-759-518-59	IC	BA6296FP			
IC801	8-752-830-87	IC	CXP5084H-636Q			
IC802	8-759-520-90	IC	PST572E			
		< COIL >				
L701	1-410-397-11	FERRITE BEADS INDUCTOR	1.1uH			
L702	1-410-509-11	INDUCTOR	10uH			
L703	1-410-397-11	FERRITE BEADS INDUCTOR	1.1uH			
L704	1-410-397-11	FERRITE BEADS INDUCTOR	1.1uH			
L705	1-410-314-11	INDUCTOR	0.47uH			
L706	1-410-314-11	INDUCTOR	0.47uH			
L707	1-410-314-31	INDUCTOR	0.47uH			
L708	1-410-397-11	FERRITE BEADS INDUCTOR	1.1uH			
L709	1-410-397-11	FERRITE BEADS INDUCTOR	1.1uH			
		< TRANSISTOR >				
Q701	8-729-801-84	TRANSISTOR	2SB1013-4			
Q702	8-729-900-36	TRANSISTOR	DTC124ES			
Q703	8-729-206-29	TRANSISTOR	RN1211			
Q704	8-729-206-36	TRANSISTOR	RN2207			
Q706	8-729-206-25	TRANSISTOR	RN1207			
Q731	8-729-206-28	TRANSISTOR	RN1210			
Q741	8-729-206-28	TRANSISTOR	RN1210			
Q802	8-729-900-89	TRANSISTOR	DTC144ES			
		< RESISTOR >				
R700	1-247-806-11	CARBON	91	5%	1/4W	
R701	1-249-397-11	CARBON	22	5%	1/4W	
R702	1-249-433-11	CARBON	22K	5%	1/4W	
R705	1-249-441-11	CARBON	100K	5%	1/4W	
R706	1-249-438-11	CARBON	56K	5%	1/4W	
R707	1-247-885-00	CARBON	180K	5%	1/4W	
R708	1-249-432-11	CARBON	18K	5%	1/4W	
R709	1-249-437-11	CARBON	47K	5%	1/4W	
R710	1-249-417-11	CARBON	1K	5%	1/4W	
R711	1-247-896-11	CARBON	510K	5%	1/4W	
R712	1-247-883-00	CARBON	150K	5%	1/4W	
R713	1-249-429-11	CARBON	10K	5%	1/4W	
R714	1-249-417-11	CARBON	1K	5%	1/4W	
R715	1-247-887-00	CARBON	220K	5%	1/4W	
R716	1-249-429-11	CARBON	10K	5%	1/4W	
R717	1-249-423-11	CARBON	3.3K	5%	1/4W	
R718	1-247-881-00	CARBON	120K	5%	1/4W	
R719	1-249-423-11	CARBON	3.3K	5%	1/4W	
R720	1-247-856-00	CARBON	11K	5%	1/4W	
R721	1-249-441-11	CARBON	100K	5%	1/4W	
R722	1-249-441-11	CARBON	100K	5%	1/4W	
R723	1-249-441-11	CARBON	100K	5%	1/4W	
R724	1-249-417-11	CARBON	1K	5%	1/4W	
R725	1-249-433-11	CARBON	22K	5%	1/4W	
R726	1-249-417-11	CARBON	1K	5%	1/4W	
R727	1-249-441-11	CARBON	100K	5%	1/4W	
R728	1-249-437-11	CARBON	47K	5%	1/4W	
R730	1-249-417-11	CARBON	1K	5%	1/4W	
R731	1-249-429-11	CARBON	10K	5%	1/4W	
R732	1-249-434-11	CARBON	27K	5%	1/4W	
R733	1-249-434-11	CARBON	27K	5%	1/4W	
R734	1-249-437-11	CARBON	47K	5%	1/4W	
R735	1-249-437-11	CARBON	47K	5%	1/4W	
R736	1-249-429-11	CARBON	10K	5%	1/4W	
R737	1-247-883-00	CARBON	150K	5%	1/4W	
R738	1-249-429-11	CARBON	10K	5%	1/4W	
R739	1-249-441-11	CARBON	100K	5%	1/4W	
R741	1-249-429-11	CARBON	10K	5%	1/4W	
R742	1-249-434-11	CARBON	27K	5%	1/4W	
R743	1-249-434-11	CARBON	27K	5%	1/4W	
R744	1-249-437-11	CARBON	47K	5%	1/4W	
R745	1-249-437-11	CARBON	47K	5%	1/4W	
R746	1-249-429-11	CARBON	10K	5%	1/4W	
R748	1-249-429-11	CARBON	10K	5%	1/4W	
R749	1-249-441-11	CARBON	100K	5%	1/4W	
R761	1-249-435-11	CARBON	33K	5%	1/4W	
R762	1-249-429-11	CARBON	10K	5%	1/4W	
R763	1-249-429-11	CARBON	10K	5%	1/4W	
R764	1-249-435-11	CARBON	33K	5%	1/4W	
R765	1-247-838-00	CARBON	2K	5%	1/4W	
R766	1-249-437-11	CARBON	47K	5%	1/4W	
R767	1-249-433-11	CARBON	22K	5%	1/4W	
R769	1-247-690-11	CARBON	15	5%	1/4W	
R781	1-249-405-11	CARBON	100	5%	1/4W	
R782	1-249-431-11	CARBON	15K	5%	1/4W	
R783	1-249-431-11	CARBON	15K	5%	1/4W	
R802	1-249-405-11	CARBON	100	5%	1/4W	
R803	1-249-437-11	CARBON	47K	5%	1/4W	
R804	1-249-435-11	CARBON	33K	5%	1/4W	
R805	1-249-435-11	CARBON	33K	5%	1/4W	
R806	1-249-435-11	CARBON	33K	5%	1/4W	
R807	1-249-441-11	CARBON	100K	5%	1/4W	

Ref. No.	Part No.	Description	Remarks
R809	1-249-437-11	CARBON 47K 5% 1/4W	
R811	1-249-441-11	CARBON 100K 5% 1/4W	
		< VARIABLE RESISTOR >	
RV701	1-230-497-11	RES, ADJ, CARBON 22K (E-F BALANCE)	
RV702	1-237-288-11	RES, ADJ, CARBON 47K (FOCUS BIAS)	
RV703	1-230-497-11	RES, ADJ, CARBON 22K (FOCUS GAIN)	
RV704	1-230-497-11	RES, ADJ, CARBON 22K (TRK GAIN)	
		< VIBRATOR >	
X801	1-567-775-11	VIBRATOR, CERAMIC (4.19MHz)	
XF701	1-579-345-11	VIBRATOR, CERAMIC (16.9344MHz)	
**********			
*	1-647-846-11	CD MOTOR BOARD	
		**********	
		< CONNECTOR >	
CNP706	1-695-108-11	CONNECTOR 6P	
		< SWITCH >	
S703	1-571-936-11	SWITCH, LEAF (LIMIT)	
**********			
*	1-647-853-11	LCD BOARD	
		*********	
*	3-389-271-01	BRACKET, LCD	
		< CONNECTOR >	
* CNJ803	1-569-919-11	SOCKET, CONNECTOR 27P	
		< LIQUID CRYSTAL DISPLAY >	
LCD801	1-810-089-11	DISPLAY PANEL, LIQUID CRYSTAL	
**********			
*	1-647-854-11	LEAF SWITCH BOARD	
		**********	
		< CONNECTOR >	
* CNP708	1-691-573-11	PIN, CONNECTOR (PC BOARD) 2P	
		< SWITCH >	
S704	1-570-013-11	SWITCH, LEAF (OPEN/CLOSE)	
**********			
*	A-3264-359-A	MAIN BOARD, COMPLETE (US, Canadian)	
*	A-3264-633-A	MAIN BOARD, COMPLETE (AEP, Italian)	
		**********	
	3-386-946-01	BUTTON (DBB)	
	3-388-164-01	KNOB (FUNCTION)	
	7-682-547-04	SCREW +P 3X6	

Ref. No.	Part No.	Description			Remarks
		< CAPACITOR >			
C120	1-161-020-11	CERAMIC	0.039uF	10%	16V
C124	1-162-294-31	CERAMIC	0.001uF	10%	50V
C125	1-161-043-00	CERAMIC	0.0022uF	10%	50V
C130	1-124-126-00	ELECT	47uF	20%	10V
C131	1-124-443-00	ELECT	100uF	20%	10V
C132	1-130-495-00	MYLAR	0.1uF	5%	50V
C133	1-124-473-11	ELECT	1000uF	20%	10V
C220	1-161-020-11	CERAMIC	0.039uF	10%	16V
C224	1-162-294-31	CERAMIC	0.001uF	10%	50V
C225	1-161-043-00	CERAMIC	0.0022uF	10%	50V
C230	1-124-126-00	ELECT	47uF	20%	10V
C231	1-124-443-00	ELECT	100uF	20%	10V
C232	1-130-495-00	MYLAR	0.1uF	5%	50V
C233	1-124-473-11	ELECT	1000uF	20%	10V
C313	1-124-916-11	ELECT	22uF	20%	63V
C315	1-162-282-31	CERAMIC	100PF	10%	50V
C316	1-162-282-31	CERAMIC	100PF	10%	50V
C317	1-162-282-31	CERAMIC	100PF	10%	50V
C318	1-162-282-31	CERAMIC	100pF	10%	50V
C330	1-124-120-11	ELECT	220uF	20%	25V
C332	1-126-017-11	ELECT	6800uF	20%	16V
C350	1-124-927-11	ELECT	4.7uF	20%	100V
C351	1-126-176-11	ELECT	220uF	20%	10V
C352	1-126-176-11	ELECT	220uF	20%	10V
C353	1-161-494-00	CERAMIC	0.022uF		25V
C360	1-161-494-00	CERAMIC	0.022uF		25V
C362	1-126-176-11	ELECT	220uF	20%	10V
C363	1-161-494-00	CERAMIC	0.022uF		25V
C365	1-161-494-00	CERAMIC	0.022uF		25V
C366	1-126-176-11	ELECT	220uF	20%	10V
C367	1-161-494-00	CERAMIC	0.022uF		25V
C368	1-124-126-00	ELECT	47uF	20%	10V
		< JACK >			
CNJ305	1-580-848-11	SOCKET, CONNECTOR(PC BOARD) 20P			
		< CONNECTOR >			
* CNP306	1-695-105-11	PIN, CONNECTOR (PC BOARD) 3P			
* CNP307	1-695-107-11	PIN, CONNECTOR (PC BOARD) 5P			
* CNP308	1-691-579-11	PIN, CONNECTOR (PC BOARD) 8P			
		< DIODE >			
D301	8-719-109-97	DIODE	RD6.8ES-B2		
D303	8-719-903-39	LED	SLP135B-55 (OPR/BATT)		
D304	8-719-109-97	DIODE	RD6.8ES-B2		
D305	8-719-109-89	DIODE	RD5.6ES-B2		
D309	8-719-911-19	DIODE	1SS119		
D313	8-719-911-19	DIODE	1SS119		
D315	8-719-911-19	DIODE	1SS119		

MAIN MD

Ref. No.	Part No.	Description				Remarks
D316	8-719-911-19	DIODE 1SS119				
D317	8-719-911-19	DIODE 1SS119				
D318	8-719-911-19	DIODE 1SS119				
		< IC >				
IC303	8-759-060-21	IC LA4598				
		< JACK >				
J301	1-563-330-11	JACK (MIX MIC)				
		< COIL >				
L301	1-410-324-11	INDUCTOR	4.7uH			
L302	1-410-324-11	INDUCTOR	4.7uH			
		< TRANSISTOR >				
Q303	8-729-119-76	TRANSISTOR	2SA1175-HFE			
Q304	8-729-206-20	TRANSISTOR	RN1202			
Q305	8-729-195-23	TRANSISTOR	2SA952-K2			
Q313	8-729-194-57	TRANSISTOR	2SC945-P			
Q316	8-729-119-76	TRANSISTOR	2SA1175-HFE			
Q317	8-729-206-20	TRANSISTOR	RN1202			
Q318	8-729-819-68	TRANSISTOR	2SD1666K-RS			
Q319	8-729-819-68	TRANSISTOR	2SD1666K-RS			
Q320	8-729-119-78	TRANSISTOR	2SC2785-HFE			
		< RESISTOR >				
R120	1-247-903-00	CARBON	1M	5%	1/4W	
R121	1-249-426-11	CARBON	5.6K	5%	1/4W	
R122	1-249-429-11	CARBON	10K	5%	1/4W	
R130	1-249-405-11	CARBON	100	5%	1/4W	
R220	1-247-903-00	CARBON	1M	5%	1/4W	
R221	1-249-426-11	CARBON	5.6K	5%	1/4W	
R222	1-249-429-11	CARBON	10K	5%	1/4W	
R230	1-249-405-11	CARBON	100	5%	1/4W	
R307	1-249-417-11	CARBON	1K	5%	1/4W	(AEP, Italian)
⚠R350	1-219-113-11	FUSIBLE	6.8	5%	1/4W	F
R351	1-249-416-11	CARBON	820	5%	1/4W	
R352	1-249-410-11	CARBON	270	5%	1/4W	
R353	1-249-408-11	CARBON	180	5%	1/4W	
R354	1-249-421-11	CARBON	2.2K	5%	1/4W	
R355	1-249-437-11	CARBON	47K	5%	1/4W	
R356	1-249-414-11	CARBON	560	5%	1/4W	
R357	1-247-804-11	CARBON	75	5%	1/4W	
R358	1-247-887-00	CARBON	220K	5%	1/4W	
R359	1-249-421-11	CARBON	2.2K	5%	1/4W	
R360	1-249-421-11	CARBON	2.2K	5%	1/4W	
R361	1-249-411-11	CARBON	330	5%	1/4W	
R362	1-249-405-11	CARBON	100	5%	1/4W	
R363	1-249-433-11	CARBON	22K	5%	1/4W	
R364	1-249-433-11	CARBON	22K	5%	1/4W	
⚠R365	1-219-149-11	FUSIBLE	1	5%	1/4W	F
R366	1-249-411-11	CARBON	330	5%	1/4W	
R367	1-249-405-11	CARBON	100	5%	1/4W	
R368	1-247-887-00	CARBON	220K	5%	1/4W	
R369	1-249-421-11	CARBON	2.2K	5%	1/4W	
R370	1-249-421-11	CARBON	2.2K	5%	1/4W	
		< VARIABLE RESISTOR >				
RV301	1-241-745-11	RES, VAR, CARBON 20K/20K (TONE)				
RV302	1-223-403-11	RES, VAR, CARBON 20K/20K (VOLUME)				
		< SWITCH >				
S302	1-571-345-11	SWITCH, LEVER SLIDE (FUNCTION)				
S303	1-572-006-11	SWITCH, PUSH (1 KEY) (MEGA BASS)				
S304	1-692-117-11	SWITCH, SLIDE (FM MODE) (AEP, Italian)				
**********						
*	A-3264-358-A	MD BOARD, COMPLETE (US, Canadian)				
*	A-3264-631-A	MD BOARD, COMPLETE (AEP, Italian)				
		**********				
		< CAPACITOR >				
C101	1-162-291-31	CERAMIC	560PF	10%	50V	
C102	1-162-291-31	CERAMIC	560PF	10%	50V	
C103	1-124-126-00	ELECT	47uF	20%	10V	
C104	1-162-840-11	CERAMIC	0.012uF	10%	16V	
C105	1-162-290-31	CERAMIC	470PF	10%	50V	
C106	1-162-832-11	CERAMIC	0.0027uF	10%	16V	
C107	1-124-927-11	ELECT	4.7uF	20%	100V	
C108	1-162-291-31	CERAMIC	560PF	10%	50V	
C109	1-124-927-11	ELECT	4.7uF	20%	100V	
C111	1-162-282-31	CERAMIC	100PF	10%	50V	
C112	1-161-327-00	CERAMIC	0.0033uF	30%	50V	
C113	1-124-903-11	ELECT	1uF	20%	50V	
C114	1-124-902-00	ELECT	0.47uF	20%	50V	
C121	1-124-903-11	ELECT	1uF	20%	50V	
C122	1-161-375-00	CERAMIC	0.0022uF	20%	50V	
C123	1-124-925-11	ELECT	2.2uF	20%	100V	
C126	1-162-282-31	CERAMIC	100pF	10%	50V	
C201	1-162-291-31	CERAMIC	560PF	10%	50V	
C202	1-162-291-31	CERAMIC	560PF	10%	50V	
C203	1-124-126-00	ELECT	47uF	20%	10V	
C204	1-162-840-11	CERAMIC	0.012uF	10%	16V	
C205	1-162-290-31	CERAMIC	470PF	10%	50V	
C206	1-162-832-11	CERAMIC	0.0027uF	10%	16V	
C207	1-124-927-11	ELECT	4.7uF	20%	100V	
C208	1-162-291-31	CERAMIC	560PF	10%	50V	
C209	1-124-927-11	ELECT	4.7uF	20%	100V	
C211	1-162-282-31	CERAMIC	100PF	10%	50V	
C212	1-161-327-00	CERAMIC	0.0033uF	30%	50V	

Note:
The components identified by mark ⚠ or dotted line with mark ⚠ are critical for safety.
Replace only with part number specified.

Note:
Les composants identifiés par une marque ⚠ sont critiques pour la sécurité.
Ne les remplacer que par une pièce portant le neméro spécifié.

Ref. No.	Part No.	Description			Remarks
C213	1-124-903-11	ELECT	1uF	20%	50V
C214	1-124-902-00	ELECT	0.47uF	20%	50V
C221	1-124-903-11	ELECT	1uF	20%	50V
C222	1-161-375-00	CERAMIC	0.0022uF	20%	50V
C223	1-124-925-11	ELECT	2.2uF	20%	100V
C226	1-162-282-31	CERAMIC	100pF	10%	50V
C301	1-124-126-00	ELECT	47uF	20%	10V
C302	1-124-927-11	ELECT	4.7uF	20%	100V
C303	1-124-907-11	ELECT	10uF	20%	50V
C304	1-124-907-11	ELECT	10uF	20%	50V
C305	1-124-907-11	ELECT	10uF	20%	50V
C306	1-124-903-11	ELECT	1uF	20%	50V
C307	1-124-902-00	ELECT	0.47uF	20%	50V
C308	1-161-494-00	CERAMIC	0.022uF		25V
C309	1-124-443-00	ELECT	100uF	20%	10V
C310	1-161-494-00	CERAMIC	0.022uF		25V
C311	1-126-176-11	ELECT	220uF	20%	10V
C312	1-124-126-00	ELECT	47uF	20%	10V
C314	1-162-282-31	CERAMIC	100PF	10%	50V
C320	1-124-902-00	ELECT	0.47uF	20%	50V
C321	1-162-844-11	CERAMIC	0.027uF	10%	16V
C322	1-162-844-11	CERAMIC	0.027uF	10%	16V
C323	1-124-034-51	ELECT	33uF	20%	16V
C324	1-124-907-11	ELECT	10uF	20%	50V
C325	1-124-916-11	ELECT	22uF	20%	63V
C326	1-124-464-11	ELECT	0.22uF	20%	50V
C327	1-124-443-00	ELECT	100uF	20%	10V
C328	1-161-494-00	CERAMIC	0.022uF		25V
C340	1-161-379-00	CERAMIC	0.01uF	20%	25V
C341	1-161-327-00	CERAMIC	0.0033uF	30%	16V
C342	1-130-471-00	MYLAR	0.001uF	5%	50V
C343	1-162-284-31	CERAMIC	150PF	10%	50V(AEP, Italian)
C344	1-124-126-00	ELECT	47uF	20%	10V
C345	1-161-494-00	CERAMIC	0.022uF		25V(AEP, Italian)
C370	1-161-494-00	CERAMIC	0.022uF		25V
		< CONNECTOR >			
CNP301	1-506-986-11	PIN, CONNECTOR (PC BOARD) 4P			
CNP302	1-506-987-11	PIN, CONNECTOR (PC BOARD) 5P			
* CNP303	1-695-106-11	PIN, CONNECTOR (PC BOARD)4P(US, Canadian)			
* CNP303	1-695-107-11	PIN, CONNECTOR (PC BOARD)5P(AEP, Italian)			
CNP304	1-506-986-11	PIN, CONNECTOR (PC BOARD) 4P			
CNP305	1-580-849-11	PIN, CONNECTOR (PC BOARD) 20P			
		< DIODE >			
D302	8-719-110-08	DIODE	RD8.2ES-B2		
D306	8-719-911-19	DIODE	1SS119		
D307	8-719-911-19	DIODE	1SS119		
D310	8-719-911-19	DIODE	1SS119		
D311	8-719-911-19	DIODE	1SS119		
D312	8-719-911-19	DIODE	1SS119		

Ref. No.	Part No.	Description			Remarks
		< IC >			
IC301	8-759-048-59	IC	BA3423S		
IC302	8-759-048-60	IC	BA3870		
IC304	8-759-932-33	IC	BU4066B		
		< TRANSISTOR >			
Q301	8-729-900-36	TRANSISTOR	DTC124ES		
Q302	8-729-281-53	TRANSISTOR	2SC1815-GR		
Q306	8-729-119-76	TRANSISTOR	2SA1175-HFE		
Q307	8-729-819-68	TRANSISTOR	2SD1666K-RS		
Q308	8-729-115-30	TRANSISTOR	2SK105A-30		
Q309	8-729-206-20	TRANSISTOR	RN1202		
Q310	8-729-195-23	TRANSISTOR	2SA952-K2		
Q311	8-729-206-20	TRANSISTOR	RN1202		
Q312	8-729-206-20	TRANSISTOR	RN1202		
Q314	8-729-206-20	TRANSISTOR	RN1202		
Q315	8-729-206-20	TRANSISTOR	RN1202 (AEP, Italian)		
Q321	8-729-206-20	TRANSISTOR	RN1202		
		< RESISTOR >			
R101	1-249-409-11	CARBON	220	5%	1/4W
R102	1-249-409-11	CARBON	220	5%	1/4W
R103	1-249-405-11	CARBON	100	5%	1/4W
R104	1-247-889-00	CARBON	270K	5%	1/4W
R105	1-249-425-11	CARBON	4.7K	5%	1/4W
R106	1-249-429-11	CARBON	10K	5%	1/4W
R107	1-249-425-11	CARBON	4.7K	5%	1/4W
R109	1-249-417-11	CARBON	1K	5%	1/4W
R111	1-249-425-11	CARBON	4.7K	5%	1/4W
R112	1-249-426-11	CARBON	5.6K	5%	1/4W
R113	1-249-429-11	CARBON	10K	5%	1/4W
R114	1-249-429-11	CARBON	10K	5%	1/4W
R201	1-249-409-11	CARBON	220	5%	1/4W
R202	1-249-409-11	CARBON	220	5%	1/4W
R203	1-249-405-11	CARBON	100	5%	1/4W
R204	1-247-889-00	CARBON	270K	5%	1/4W
R205	1-249-425-11	CARBON	4.7K	5%	1/4W
R206	1-249-429-11	CARBON	10K	5%	1/4W
R207	1-249-425-11	CARBON	4.7K	5%	1/4W
R209	1-249-417-11	CARBON	1K	5%	1/4W
R211	1-249-425-11	CARBON	4.7K	5%	1/4W
R212	1-249-426-11	CARBON	5.6K	5%	1/4W
R213	1-249-429-11	CARBON	10K	5%	1/4W
R214	1-249-429-11	CARBON	10K	5%	1/4W
R301	1-247-903-00	CARBON	1M	5%	1/4W
R302	1-249-435-11	CARBON	33K	5%	1/4W
R303	1-249-435-11	CARBON	33K	5%	1/4W
R304	1-249-435-11	CARBON	33K	5%	1/4W

MD POWER SWITCH

Ref. No.	Part No.	Description				Remarks
R305	1-249-435-11	CARBON	33K	5%	1/4W	
R306	1-247-712-11	CARBON	820	5%	1/4W	
R308	1-249-405-11	CARBON	100	5%	1/4W	
R309	1-249-429-11	CARBON	10K	5%	1/4W	
R310	1-249-429-11	CARBON	10K	5%	1/4W	
R311	1-249-429-11	CARBON	10K	5%	1/4W	
R320	1-249-425-11	CARBON	4.7K	5%	1/4W	
R321	1-249-424-11	CARBON	3.9K	5%	1/4W	
R322	1-247-903-00	CARBON	1M	5%	1/4W	
R324	1-249-402-11	CARBON	56	5%	1/4W	
R325	1-249-441-11	CARBON	100K	5%	1/4W	
R326	1-249-418-11	CARBON	1.2K	5%	1/4W	
R340	1-249-411-11	CARBON	330	5%	1/4W	
R341	1-249-393-11	CARBON	10	5%	1/4W	
R342	1-249-435-11	CARBON	33K	5%	1/4W	
R371	1-249-421-11	CARBON	2.2K	5%	1/4W	
R372	1-247-887-00	CARBON	220K	5%	1/4W	
R373	1-249-407-11	CARBON	150	5%	1/4W	
R374	1-247-804-11	CARBON	75	5%	1/4W	
R375	1-249-441-11	CARBON	100K	5%	1/4W	
R376	1-249-429-11	CARBON	10K	5%	1/4W	
R377	1-249-421-11	CARBON	2.2K	5%	1/4W	
R378	1-249-429-11	CARBON	10K	5%	1/4W	
R379	1-249-418-11	CARBON	1.2K	5%	1/4W	
R380	1-249-422-11	CARBON	2.7K	5%	1/4W	
⚠R381	1-219-162-11	FUSIBLE	3.3	5%	1/4W	F
		< VARIABLE RESISTOR >				
RV303	1-230-494-11	RES, ADJ, CARBON 1K				
		< SWITCH >				
S301	1-572-325-11	SWITCH, SLIDE (REC/PB)				
S305	1-692-080-11	SWITCH, PUSH (1 KEY) (A-POWER)				
S306	1-692-080-11	SWITCH, PUSH (1 KEY) (HI SPEED)				
S307	1-692-080-11	SWITCH, PUSH (1 KEY) (B-POWER)				
S308	1-692-080-11	SWITCH, PUSH (1 KEY) (A/B)				
		< TRANSFORMER >				
T301	1-433-346-11	TRANSFORMER, BIAS OSCILLATOR				

****

*	1-647-848-11	POWER BOARD				
		**********				
		< CAPACITOR >				
C901	1-101-005-00	CERAMIC	22000PF		50V	
C902	1-101-005-00	CERAMIC	22000PF		50V	
C903	1-101-005-00	CERAMIC	22000PF		50V	
C904	1-101-005-00	CERAMIC	22000PF		50V	
C905	1-101-005-00	CERAMIC	22000PF		50V(AEP, Italian)	
C127	1-162-282-31	CERAMIC	100pF	10%	50V	
C227	1-162-282-31	CERAMIC	100pF	10%	50V	
		< CONNECTOR >				
* CNP309	1-695-106-11	PIN, CONNECTOR (PC BOARD) 4P				
* CNP901	1-691-573-11	PIN, CONNECTOR (PC BOARD) 2P				
		< DIODE >				
D901	8-719-911-55	DIODE U05G				
D902	8-719-911-55	DIODE U05G				
D903	8-719-911-55	DIODE U05G				
D904	8-719-911-55	DIODE U05G				
		< FUSE >				
⚠F901	1-576-107-11	FUSE (3.15A) (US, Canadian)				
⚠F901	1-532-464-51	FUSE (T2.5A) (AEP, Italian)				
⚠F902	1-576-695-21	FUSE (315mA) (US, Canadian)				
		< FUSE HOLDER >				
FH901	1-533-217-31	HOLDER, FUSE				
FH902	1-533-217-31	HOLDER, FUSE				
FH903	1-533-217-31	HOLDER, FUSE (US, Canadian)				
FH904	1-533-217-31	HOLDER, FUSE (US, Canadian)				
		< JACK >				
J302	1-566-891-11	JACK (PHONES)				
⚠J901	1-540-009-11	INLET, AC (US, Canadian)				
⚠J901	1-526-838-11	INLET, AC 2P (AEP, Italian)				
		< COIL >				
L151	1-410-324-11	INDUCTOR	4.7uH			
L251	1-410-324-11	INDUCTOR	4.7uH			
L351	1-410-324-11	INDUCTOR	4.7uH			
		< LINE FILTER >				
⚠LF901	1-424-150-21	TRANSFORMER, LINE FILTER				
		< RESISTOR >				
R151	1-249-405-11	CARBON	100	5%	1/4W	
R251	1-249-405-11	CARBON	100	5%	1/4W	
		< TRANSFORMER >				
⚠T901	1-450-515-11	TRANSFORMER, POWER (US, Canadian)				
⚠T901	1-450-517-11	TRANSFORMER, POWER (AEP, Italian)				

****

*	1-647-851-11	SWITCH BOARD				
		**********				
		< SWITCH >				
S801	1-572-198-11	SWITCH, KEY BOARD (▷ PLAY)				
S802	1-572-198-11	SWITCH, KEY BOARD (□ STOP)				

Note:
The components identified by mark ⚠ or dotted line with mark ⚠ are critical for safety.
Replace only with part number specified.

Note:
Les composants identifiés par une marque ⚠ sont critiques pour la sécurité.
Ne les remplacer que par une pièce portant le neméro spécifié.

Ref.No.	Part No.	Description	Remarks
S803	1-572-198-11	SWITCH, KEY BOARD (⏮ AMS/SEARCH)	
S804	1-572-198-11	SWITCH, KEY BOARD (⏭ AMS/SEARCH)	
S805	1-572-198-11	SWITCH, KEY BOARD (⏸ PAUSE)	
S806	1-572-198-11	SWITCH, KEY BOARD (PLAY/MODE)	
S807	1-572-198-11	SWITCH, KEY BOARD (DISPLAY/ENTER)	

****

*	A-3264-641-A	TUNER BOARD, COMPLETE (US, Canadian)	
*	A-3264-715-A	TUNER BOARD, COMPLETE (AEP)	
*	A-3264-815-A	TUNER BOARD, COMPLETE (Italian)	
		**********	
*	3-378-438-01	CUSHION, SARANET	
	3-388-189-01	GEAR, TUNING CAPACITOR	
	7-621-770-87	SCREW +P 2.6X5	
		< CAPACITOR >	
C1	1-163-189-00	CERAMIC MELF 220PF	10% 50V
C3	1-163-059-00	CERAMIC CHIP 0.01uF	10% 50V (US, Canadian)
C4	1-124-907-11	ELECT 10uF	20% 50V
C5	1-163-059-00	CERAMIC CHIP 0.01uF	10% 50V
C6	1-163-149-00	CERAMIC MELF 1.8PF	20% 50V
C6	1-163-159-00	CERAMIC MELF 2.2PF	10% 50V (AEP)
C6	1-163-150-00	CERAMIC MELF 3.3PF	10% 50V(Italian)
C7	1-163-166-00	CERAMIC MELF 24PF	5% 50V (US, Canadian)
C7	1-163-168-00	CERAMIC MELF 30PF	5% 50V(AEP, Italian)
C8	1-102-953-00	CERAMIC 18PF	5% 50V (US, Canadian)
C8	1-102-961-00	CERAMIC 27PF	5% 50V(AEP, Italian)
C9	1-163-154-00	CERAMIC MELF 6.8PF	10% 50V (US, Canadian)
C9	1-163-155-00	CERAMIC MELF 8.2PF	10% 50V (AEP)
C9	1-163-158-00	CERAMIC MELF 11PF	5% 50V(Italian)
C10	1-163-150-00	CERAMIC MELF 3.3PF	10% 50V
C11	1-163-059-00	CERAMIC CHIP 0.01uF	10% 50V
C12	1-163-181-00	CERAMIC MELF 100PF	10% 50V
C15	1-124-927-11	ELECT 4.7uF	20% 100V
C16	1-124-903-11	ELECT 1uF	20% 50V
C17	1-124-126-00	ELECT 47uF	20% 10V
C18	1-124-126-00	ELECT 47uF	20% 10V
C19	1-163-059-00	CERAMIC CHIP 0.01uF	10% 50V
C20	1-124-903-11	ELECT 1uF	20% 50V
C21	1-124-925-11	ELECT 2.2uF	20% 100V
C22	1-124-443-00	ELECT 100uF	20% 10V
C23	1-124-902-00	ELECT 0.47uF	20% 50V
C24	1-124-927-11	ELECT 4.7uF	20% 100V
C25	1-124-463-00	ELECT 0.1uF	20% 50V
C27	1-161-053-00	CERAMIC 0.015uF	10% 50V (US, Canadian)
C27	1-162-840-11	CERAMIC 0.012uF	10% 50C(AEP, Italian)
C28	1-161-053-00	CERAMIC 0.015uF	10% 50V (US, Canadian)
C28	1-162-840-00	CERAMIC 0.012uF	10% 50V(AEP, Italian)
C33	1-163-154-00	CERAMIC MELF 6.8PF	10% 50V (US, Canadian)
C34	1-163-181-00	CERAMIC MELF 100PF	10% 50V
C35	1-163-181-00	CERAMIC MELF 100PF	10% 50V
C38	1-162-397-11	CERAMIC MELF 0.001uF	10% 50V
C40	1-163-159-00	CERAMIC MELF 2.2PF	10% 50V (AEP)
C40	1-162-347-11	CERAMIC MELF 1.8PF	20% 50V(Italian)
		< FILTER >	
CF1	1-577-599-81	FILTER, CERAMIC	
CF2	1-239-249-11	ENCAPSULATED COMPONENT	
CF3	1-577-599-81	FILTER, CERAMIC	
CF4	1-577-599-81	FILTER, CERAMIC	
		< CONNECTOR >	
* CNP22	1-691-573-11	PIN, CONNECTOR (PC BOARD) 2P	
		< TRIMMER >	
CT1-4, CV1-4	1-151-696-11	CAP, VAR (US, Canadian)	
CT1-4, CV1-4	1-151-695-11	CAP, VAR (AEP, Italian)	
		< FILTER >	
FL1	1-236-022-11	FILTER, BAND PASS	
FL1	1-236-711-21	FILTER, BAND PASS	
		< IC >	
IC1	8-752-050-20	IC CXA1238S	
		< JUMPER RESISTOR >	
JR1	1-216-296-00	METAL CHIP 0	5% 1/8W
JR2	1-216-296-00	METAL CHIP 0	5% 1/8W
JR3	1-216-296-00	METAL CHIP 0	5% 1/8W
JR8	1-216-296-00	METAL CHIP 0	5% 1/8W
JR12	1-216-296-00	METAL CHIP 0	5% 1/8W
JR14	1-216-296-00	METAL CHIP 0	5% 1/8W
JR15	1-216-296-00	METAL CHIP 0	5% 1/8W
JR17	1-216-296-00	METAL CHIP 0	5% 1/8W
JR18	1-216-296-00	METAL CHIP 0	5% 1/8W
JR19	1-216-296-00	METAL CHIP 0	5% 1/8W
		< COIL >	
L1	1-428-777-11	COIL, AIR-CORE (US, Canadian)	
L1	1-428-776-11	COIL, AIR-CORE (AEP, Italian)	
L2	1-460-336-11	COIL (WITH CORE) (US, Canadian)	
L2	1-460-205-11	COIL (WITH CORE) (AEP, Italian)	
L3	1-402-416-11	ANTENNA, FERRITE-ROD (MW) (US, Canadian)	
L3	1-402-158-11	ANTENNA, FERRITE-ROD (MW) (AEP, Italian)	

TUNER

Ref. No.	Part No.	Description	Remarks
L4	1-406-474-11	COIL (OSC) (US, Canadian)	
L4	1-406-475-11	COIL (OSC) (AEP, Italian)	
		< TRANSISTOR >	
Q2	8-729-900-80	TRANSISTOR DTC114ES (AEP, Italian)	
		< RESISTOR >	
R1	1-249-413-11	CARBON 470 5% 1/4W	
R3	1-249-421-11	CARBON 2.2K 5% 1/4W	
R5	1-249-425-11	CARBON 4.7K 5% 1/4W	(US, Canadian)
R6	1-249-441-11	CARBON 100K 5% 1/4W	
R7	1-249-417-11	CARBON 1K 5% 1/4W	
R9	1-249-441-11	CARBON 100K 5% 1/4W	
R10	1-249-404-00	CARBON 82 5% 1/4W	
R11	1-249-427-11	CARBON 6.8K 5% 1/4W	
R12	1-249-427-11	CARBON 6.8K 5% 1/4W	
R13	1-249-405-11	CARBON 100 5% 1/4W	
R14	1-249-429-11	CARBON 10K 5% 1/4W	
R15	1-215-477-00	METAL 220K 1% 1/6W	
R16	1-215-477-00	METAL 220K 1% 1/6W	
R17	1-249-421-11	CARBON 2.2K 5% 1/4W	
R21	1-249-411-11	CARBON 330 5% 1/4W	
R29	1-249-429-11	CARBON 10K 5% 1/4W	(AEP, Italian)
		< VARIABLE RESISTOR >	
RV1	1-238-601-11	RES, ADJ, CARBON 22K (VCO)	
		< SWITCH >	
S1	1-571-547-11	SWITCH, SLIDE (BAND)	
		< TRANSFORMER >	
T1	1-239-249-11	ENCAPSULATED COMPONENT	

****

MISCELLANEOUS
****

Ref. No.	Part No.	Description	Remarks
120	1-452-531-11	MAGNET	
124	1-751-445-11	WIRE, PARALLEL (FFC) (27 CORE)	
324	1-543-876-13	HEAD (ERASE)	
⚠405	8-848-137-11	PICK-UP, OPTICAL KSS-210B	
ANT1	1-501-515-11	ANTENNA, TELESCOPIC (FM)	
* CNJ301	1-691-561-11	HOUSING, CONNECTOR 4P (DECK-A)	
* CNJ302	1-691-562-11	HOUSING, CONNECTOR 5P (DECK-B)	
HRP601	1-543-628-11	HEAD, MAGNETIC (REC/PB) (DECK-A)	
HRP602	1-543-714-11	HEAD, MAGNETIC (REC/PB) (DECK-B)	
M401	X-4920-924-1	MOTOR ASSY (REEL/CAPSTAN)	
M701	X-2625-132-1	GEAR ASSY, MOTOR (SLED)	
S703	1-571-936-11	SWITCH, LEAF (LIMIT)	
S704	1-570-013-11	SWITCH, LEAF (OPEN/CLOSE)	
SP901	1-504-269-21	SPEAKER (10CM)	
SP902	1-504-269-21	SPEAKER (10CM)	

****

ACCESSORIES & PACKING MATERIALS
****

⚠	1-690-952-21	CORD, POWER (US)
⚠	1-590-147-11	CORD, POWER (Canadian)
⚠	1-590-253-11	CORD, POWER SUPPLY (AEP, Italian)
	3-756-864-21	MANUAL, INSTRUCTION (ENGLISH) (US, Canadian)
	3-756-864-31	MANUAL, INSTRUCTION (FRENCH) (Canadian)
	3-756-864-51	MANUAL, INSTRUCTION (ENGLISH, SPANISH, ITALIAN, DUTCH) (AEP, Italian)
	3-906-186-01	INDIVIDUAL CARTON (US, Canadian)
	3-906-189-01	INDIVIDUAL CARTON (AEP, Italian)
	3-906-187-01	CUSHION (L)
	3-906-188-01	CUSHION (R)

****

****
HARDWARE LIST
****

#1	7-685-647-79	SCREW, TAPPING +BV 3X10
#2	7-685-104-19	SCREW +P 2X6 TYPE2 NON-SLIT
#3	7-682-548-04	SCREW +BVTT 3X8 (S)
#4	7-685-870-01	SCREW +BVTT 3X5 (S)
#5	7-621-770-87	SCREW +P 2.6X5
#6	7-685-648-79	SCREW, TOTSU PTPWH 3X12, TYPE2
#7	7-682-148-15	SCREW +P 3X8
#8	7-685-547-19	SCREW +BTP 3X10 TYPE2 N-S
#9	7-621-772-00	SCREW +B 2X3
#10	7-685-133-19	SCREW +P 2.6X6 TYPE2
#11	7-685-132-19	SCREW +P 2.6X5 TYPE2 NON-SLIT
#12	7-685-144-11	SCREW +P 3X5 TYPE2 NON-SLIT
#13	7-621-255-15	SCREW +P 2X3
#14	7-682-547-04	SCREW +P 3X6

Note:
The components identified by mark ⚠ or dotted line with mark ⚠ are critical for safety.
Replace only with part number specified.

Note:
Les composants identifiés par une marque ⚠ sont critiques pour la sécurité.
Ne les remplacer que par une pièce portant le neméro spécifié.

English
93F0554-1
Printed in Japan

9-957-989-11

Sony Corporation
General Audio Group

Published by Audio Sector Quality Assurance Dept.

CFD-110

SONY
SERVICE MANUAL

US Model
Canadian Model
AEP Model
Australian Model
Taiwan Model

SUPPLEMENT-2

Revise your service manual as shown below due to parts supply classification has been changed.

: Indicates revised portion.

Page	Ref. No.	CURRENT		REVISED	
		Part No.	Description	Part No.	Description
	125	A-3300-118-A	HOLDER SUB ASSY (CD)	3-388-212-01	LID, CD
	127		Not supplied	3-388-214-01	HOLDER, CHUCKING
	128		————	3-386-985-01	PLATE (CD), TRANSPARENT
41		(3) CD ASSEMBLY SECTION		(3) CD ASSEMBLY SECTION	

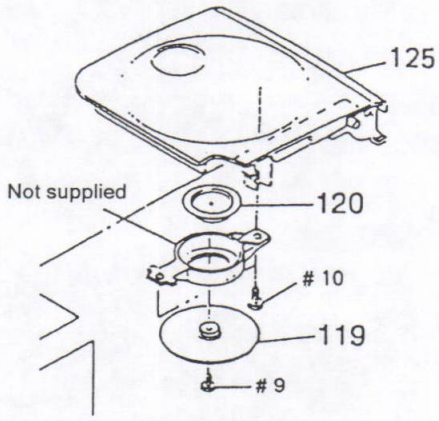

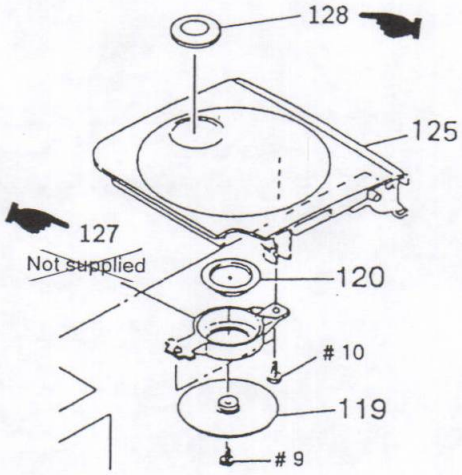

MICROFILM
9-957-989-82

Sony Corporation
Consumer A&V Products Company
Personal A&V Products Div.

English
94G0561-1D
Printed in Japan

Published by Home A&V Products Div.
Quality Engineering Dept.

SONY Service Bulletin

Date	Ref. No.	Model	GA
17.08.95	**GA01595R**	**CFD-110, CFD-110L, CFD-112, CFD-112L, CFD-550, CFD-550L, CFS-DW34, CFS-DW34L, CFS-DW34S, CFS-W304, CFS-W304L, CFS-W304LII, CFS-W304S, CFS-W308, CFS-W308L, CFS-W308S, CFS-W310L, CFS-W310S, CFS-W318, CFS-W318L, CFS-W318S, CFS-W328, CFS-W328L, CFS-W328S, CFS-W504, CFS-W504L, CFS-W504LII, CFS-W504S**	
Subject			IRIS
Changes in Tape Transport Mechanism [REVISION]			.185

The Tape Transport Mechanism has been changed during production from a so-called "idler" type mechanism to a "gear" type mechanism.

The table below shows the parts that have changed.

Former (Idler type)		*New (Gear type)*	
FR Pulley Assy (single mechanism) X-4918-580-1 FR Pulley Assy (double mechanism) X-4920-922-1			Gear Pulley Assy X-3366-943-1
T Reel Plate Assy X-4918-582-1			(FWD) Limit Assy X-3366-942-1
Idler Lever (S) Assy X-4920-346-1			Gear (FWD) 3-904-615-21 Lever (FWD) 3-904-619-21
Wheel (S) Assy Capstan X-4920-349-1			Wheel (W) Assy Capstan X-4920-923-1
Shut-off Lever (S) 4-928-986-01			Lever (Shut-off) (S) 3-904-621-21 Coil Spring (Compression) 3-904-617-01
Shut-off Lever (T) 4-928-987-01			Lever (Shut-off) (T) 3-904-620-21

APPLICABLE MODELS

All the models using a tape drive mechanism ending in -64.

SONY Service Bulletin

Date	Ref. No.	Model	GA
31.03.95	**GA01595**	**CFD-110, CFD-110L, CFD-112, CFD-112L**	
Subject **Changes in Tape Transport Mechanism**			IRIS .185

The Tape Transport Mechanism has been changed during production from a so-called "idler" type mechanism to a "gear" type mechanism.

The table below shows the parts that have changed. Other parts remain compatible between the two types of mechanism.

Ref.	*Former*		*New*	
263	FWD Idler Assy	X-4920-346-1	FWD Gear	3-904-615-21
			FWD Lever	3-904-619-21
266	FWD Limiter Assy	X-4918-582-1	FWD Limiter Assy	X-3366-942-1
273	Pulley Assy	X-4920-922-1	Gear Pulley Assy	X-3366-943-1

Sony Service Centre (Europe) N.V.
Technologielaan 7
B - 1840 Londerzeel