CDP-102

SERVICE MANUAL

AEP Model
UK Model
E Model

SUPPLEMENT

No. 1
November, 1985

File this supplement with the service manual.

Subject: MECHANISM DECK CHANGE

Applicable Serial No.

AEP Model	*508,301 ~*
G-AEP Model	*504,601 ~*
UK Model	*603,401 ~*
E2 Model	*402,201 ~*
E3 Model	*304,101 ~*

MICROFILM

COMPACT DISC PLAYER

SONY®

AUD

AEP Model: Serial No. 508,301 ~
G-AEP Model: Serial No. 504,601 ~
UK Model: Serial No. 603,401 ~

E2 Model: Serial No. 402,201 ~
E3 Model: Serial No. 304,101 ~

MOUNTING DIAGRAM 1

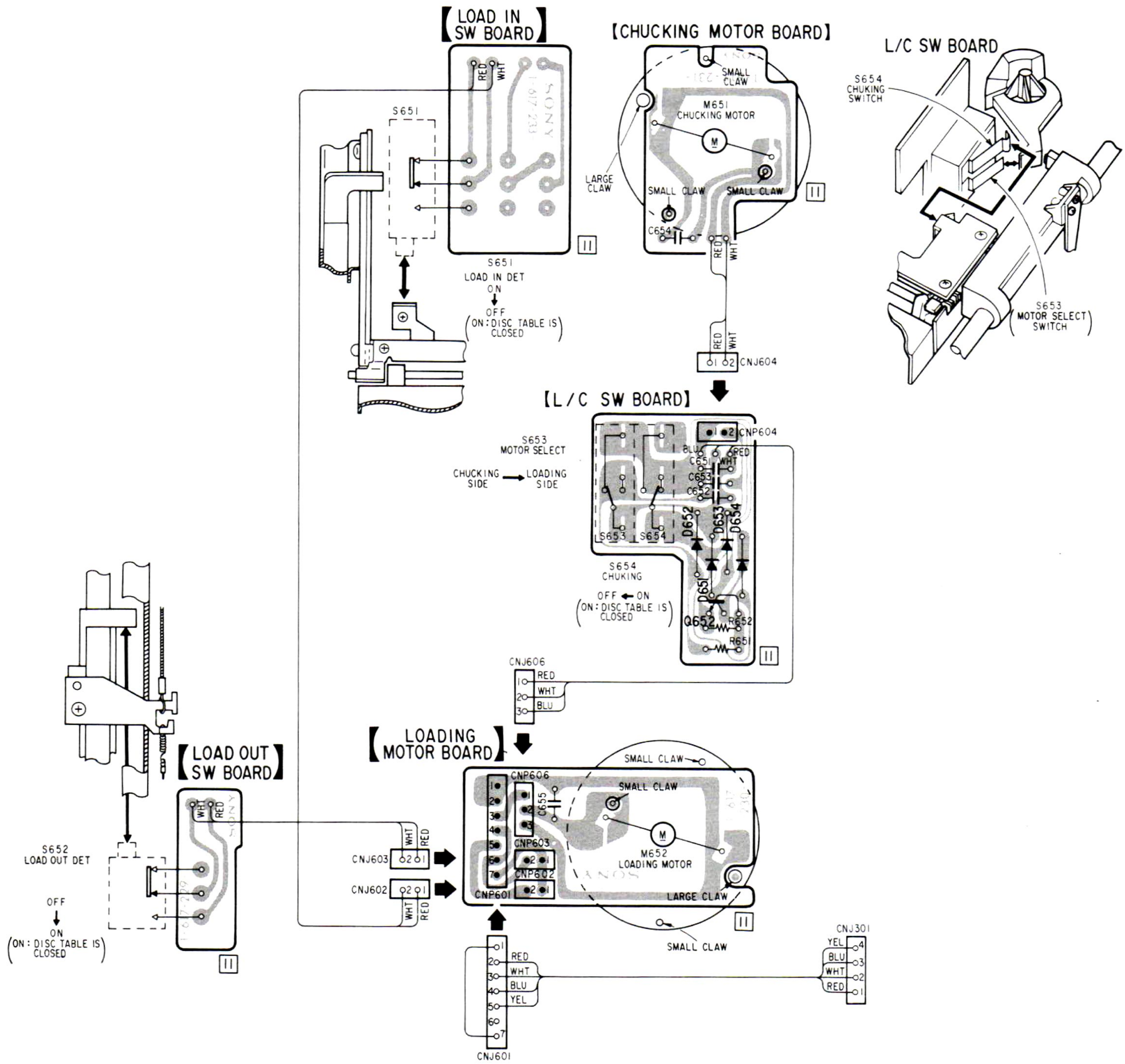

www.hifiengine.com

AEP Model: Serial No. 508,301 ~
G-AEP Model: Serial No. 504,601 ~
UK Model: Serial No. 603,401 ~

E2 Model: Serial No. 402,201 ~
E3 Model: Serial No. 304,101 ~

SCHEMATIC DIAGRAM 1

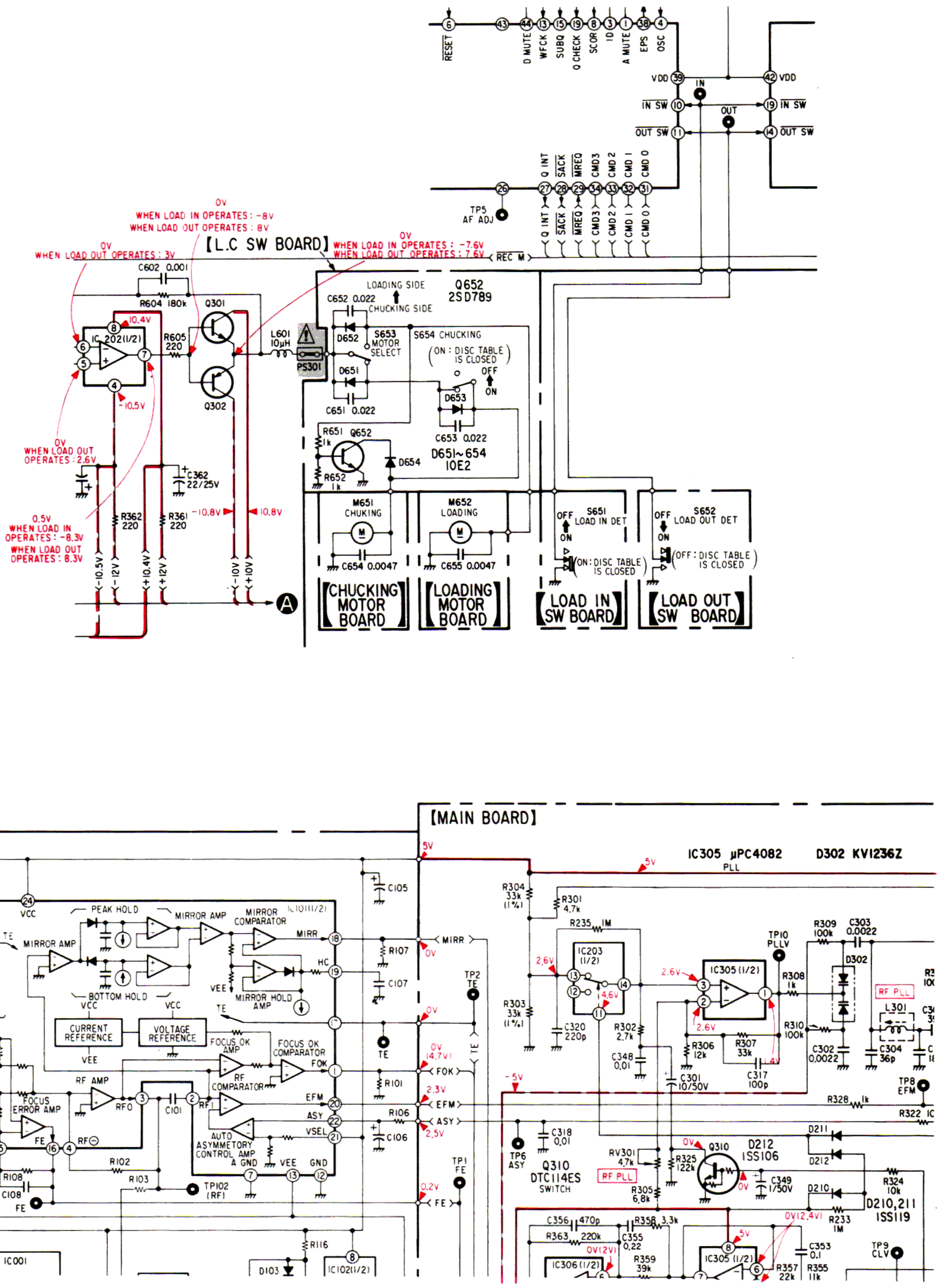

SCHEMATIC DIAGRAM 2

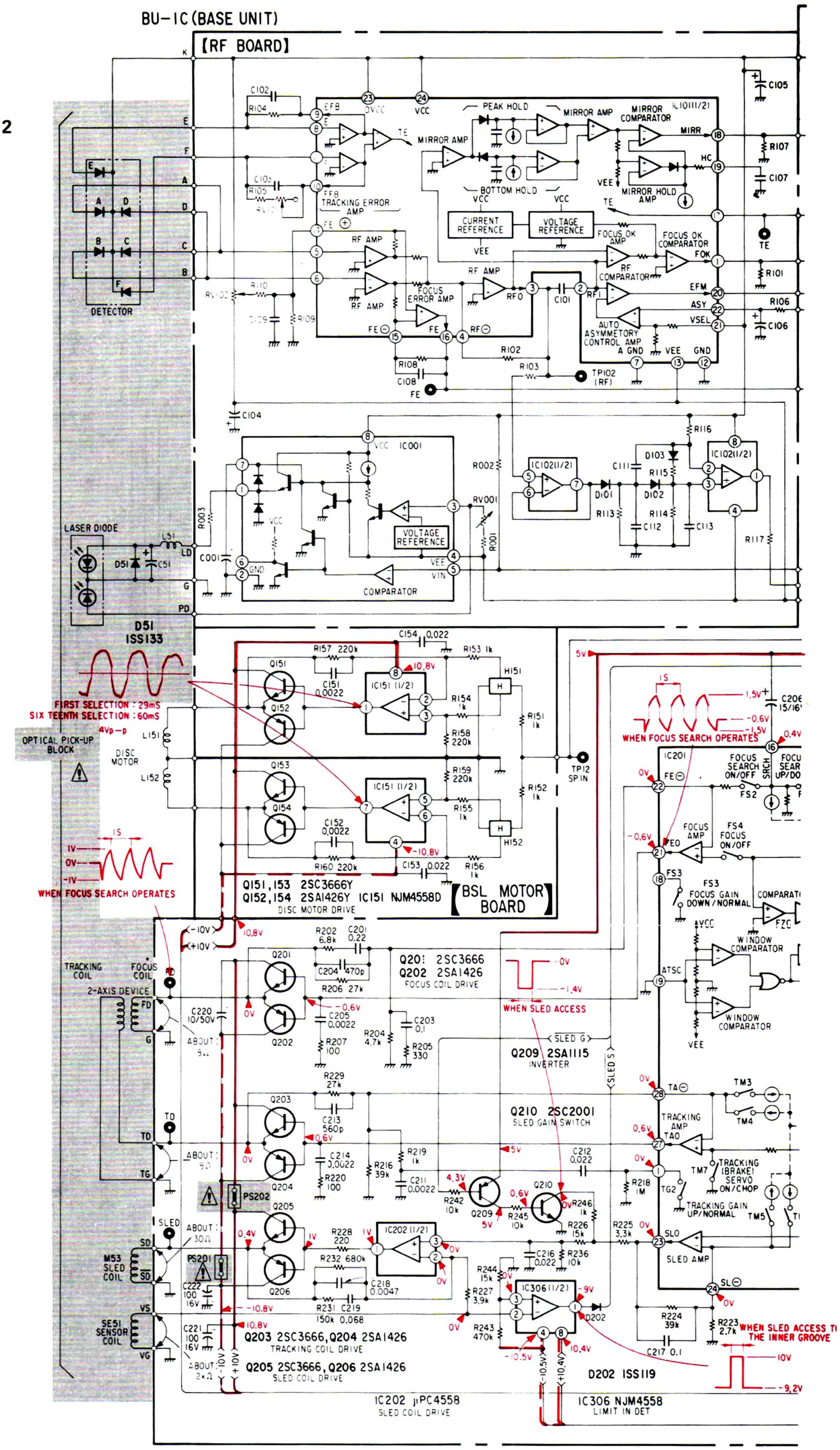

Note: The components identified by shading and mark ⚠ are critical for safety. Replace only with part number specified.

MOUNTING DIAGRAM 2

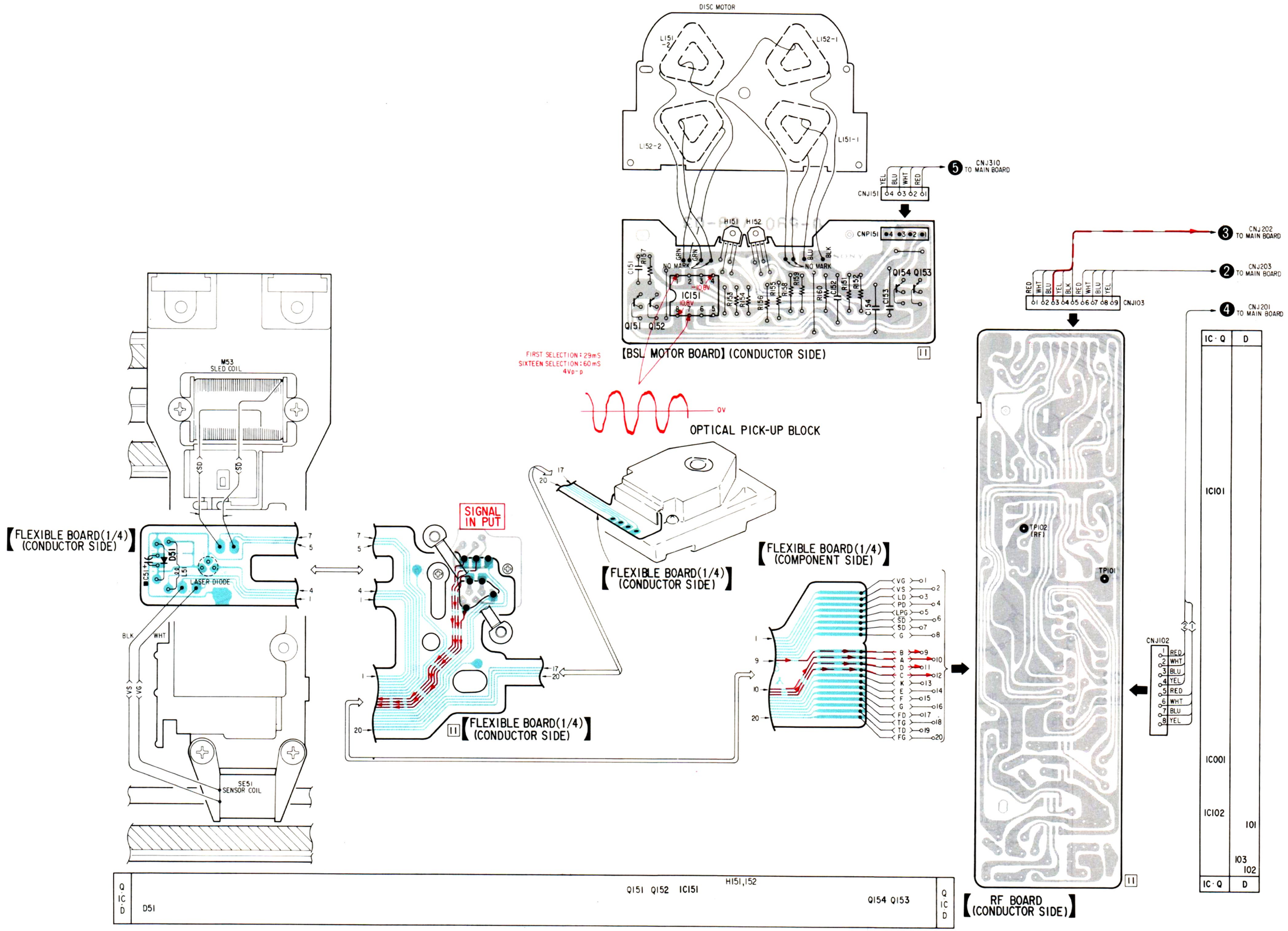

EXPLODED VIEWS AND PARTS LIST

NOTE:
- The mechanical parts with no reference number in the exploded views are not supplied.

Items marked " ★ " are not stocked since they are seldom required for routine service. Some delay should be anticipated when ordering these items.

- The construction parts of an assembled part are indicated with a collation number on the remark column.

(1) CDM4-1C

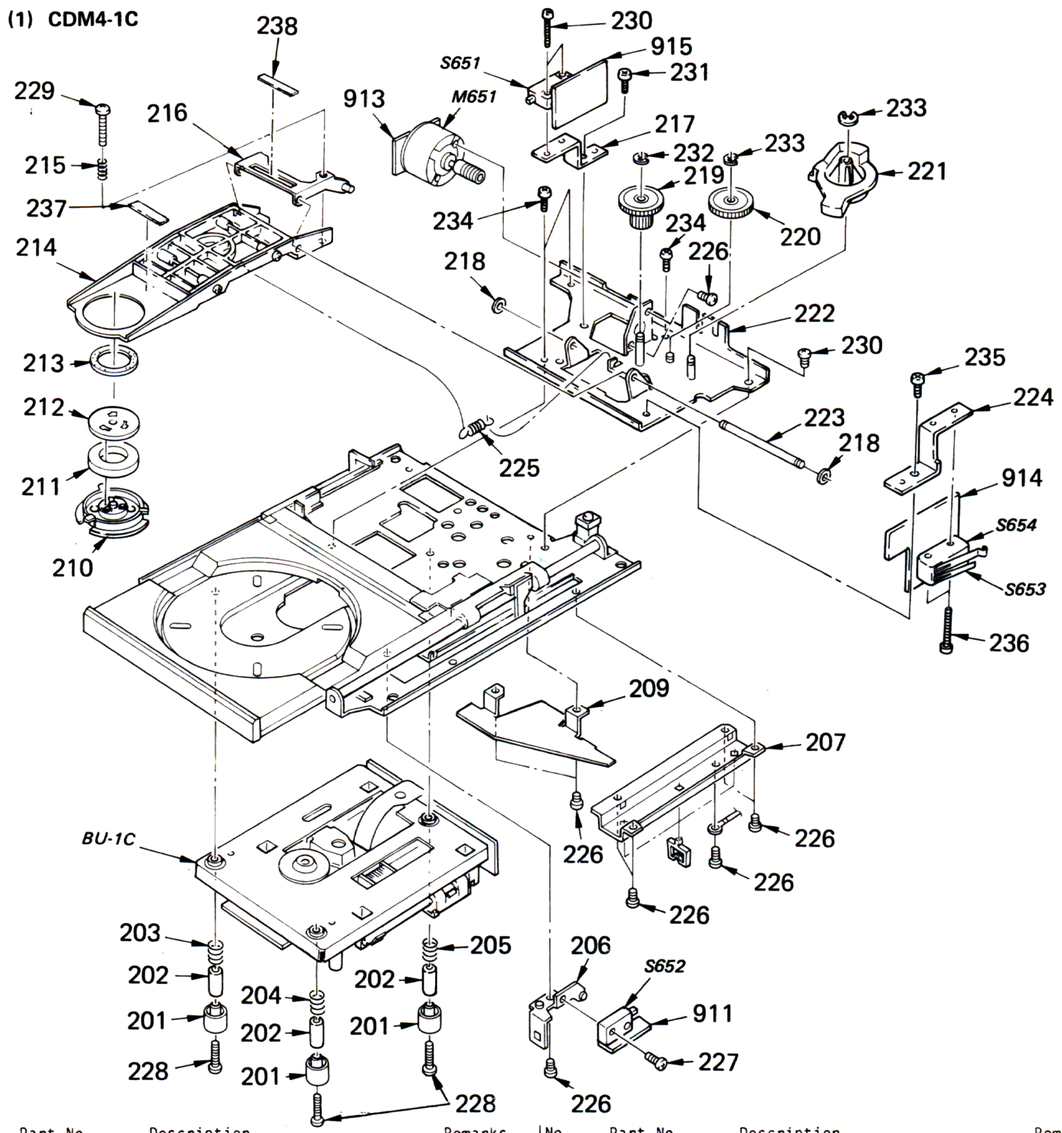

No.	Part No.	Description	Remarks
201	4-908-592-01	POLE (A), INSULATOR	
202	*4-908-636-01	SPACER	
203	4-912-548-01	SPRING, COMPRESSION	
204	4-912-547-01	SPRING, COMPRESSION	
205	4-912-549-01	SPRING, COMPRESSION	
206	*4-908-541-01	BRACKET (C), SWITCH	
207	*X-4908-517-1	COVER ASSY, ROPE	
209	*4-908-597-01	COVER, BELT	
210	4-912-530-01	PULLEY, PRESS	
211	1-452-340-11	MAGNET	
212	*4-912-515-01	YOKE	
213	4-908-551-01	CUSHION	
214	*X-4912-509-1	ARM ASSY, C	
215	4-908-559-01	SPRING, COMPRESSION	
216	X-4908-513-1	PLATE ASSY, ADJUSTMENT, ARM	
217	*4-912-543-01	BRACKET (D), SWITCH	
218	3-558-708-21	WASHER, STOPPER	
219	4-912-514-01	GEAR (A)	
220	4-912-525-01	GEAR (B)	
221	4-912-528-01	GEAR, CAM	
222	*X-4912-503-1	CHASSIS ASSY, SUB	
223	4-908-513-01	SHAFT, FULCRUM, C ARM	
224	*4-912-524-01	BRACKET (A), SWITCH	

No.	Part No.	Description	Remarks
225	4-908-555-01	SPRING, TENSION (C ARM)	
226	7-621-775-00	SCREW +B 2.6X3	
227	7-621-770-XX	SCREW +P 2.6X8	
228	7-682-553-09	SCREW +B 3X20	
229	7-621-775-80	SCREW +B 2.6X16	
230	7-685-864-01	SCREW +BVTT 2.6X10 (S)	
231	7-682-646-01	SCREW +PS 3X5	
232	7-624-109-04	STOP RING 5.0, TYPE -E	
233	7-624-106-04	STOP RING 3.0, TYPE -E	
234	7-682-546-04	SCREW +BVTT 3X5 (S)	
235	7-682-544-09	SCREW +B 3X3	
236	7-621-257-85	SCREW +P 2.3X14	
237	4-912-551-01	SHEET (C), DT PS	
238	4-912-552-01	SHEET (B), DT PS	
911	*1-617-229-11	PC BOARD, LOAD OUT SW	
913	*1-617-231-11	PC BOARD, CHUCKING MOTOR	
914	*1-617-232-11	PC BOARD, L.C. SW	
915	*1-617-233-11	PC BOARD, IN SW	
S651	1-554-205-00	SWITCH, PUSH (LOAD IN DET)	
S652	1-554-205-00	SWITCH, PUSH (LOAD OUT DET)	
S653	1-553-636-00	SWITCH, MICRO (MOTOR SWITCHING)	
S654	1-570-447-11	SWITCH, MICRO (CHACKING)	

AEP Model: Serial No. 508,301 ~
G-AEP Model: Serial No. 504,601 ~
UK Model: Serial No. 603,401 ~
E2 Model: Serial No. 402,201 ~
E3 Model: Serial No. 304,101 ~

(2) CDM4-1C

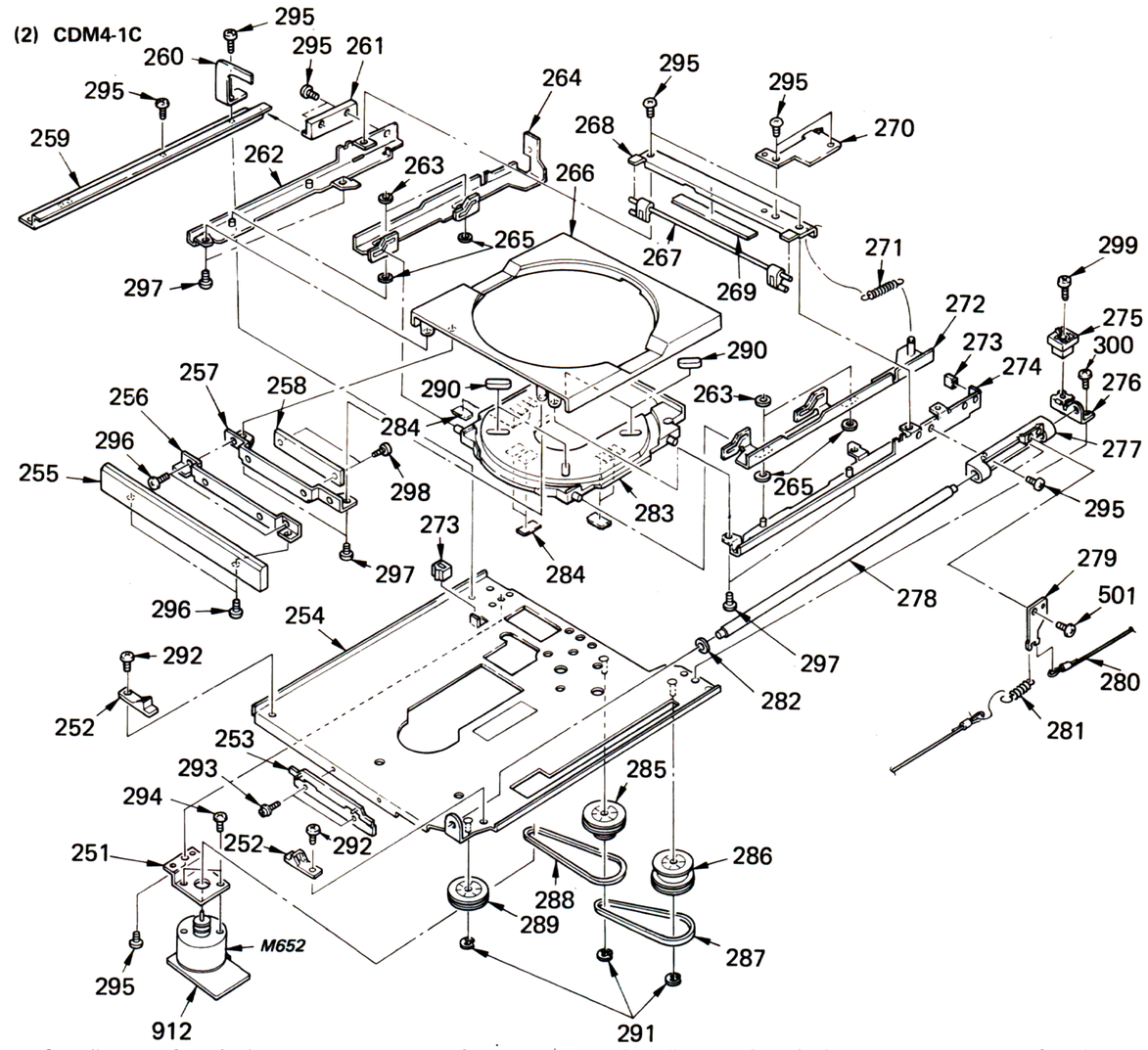

No.	Part No.	Description	Remarks
251	*4-908-523-01	BRACKET, MOTOR	
252	4-908-540-01	GUIDE, ASSIST	
253	*X-4912-508-1	BRACKET ASSY, TABLE	
254	*X-4912-507-1	CHASSIS ASSY, MECHANICAL	
255	X-4908-519-1	PANEL, LOADING	
256	*4-912-545-01	BRACKET (B), LOADING PANEL	
257	*4-912-540-01	BRACKET (A), L PANEL	
258	*4-912-544-01	PLATE, FIXED	
259	*4-912-529-01	GUIDE, LOADING	
260	*4-912-527-01	RETAINER, TABLE	
261	*4-912-534-01	GUIDE, SUB	
262	*X-4912-504-1	BRACKET (LEFT) ASSY, TABLE	
263	3-558-708-21	WASHER, STOPPER	
264	*4-912-531-01	PLATE (LEFT), CAM, DISK	
265	3-701-439-11	WASHER	
266	4-908-584-01	TABLE, DISK	
267	4-908-534-01	LEVER, FUNCTION	
268	*4-912-532-01	REINFORCEMENT, TABLE	
269	*4-912-526-01	SHEET	
270	*4-912-522-01	PLATE, SW	
271	4-912-516-01	SPRING (DISK CAM), TENSION	
272	*X-4912-506-1	PLATE (RIGHT) ASSY, CAM, DISK	
273	4-887-175-00	RUBBER, STOPPER	
274	*X-4912-505-1	BRACKET (RIGHT) ASSY, TABLE	
275	*4-912-513-01	STOPPER, TABLE	
276	*4-912-519-01	RETAINER (RIGHT), SHAFT	
277	4-912-538-01	BEARING (RIGHT), GUIDE	

No.	Part No.	Description	Remarks
278	4-912-521-01	SHAFT (RIGHT), GUIDE	
279	*4-912-520-01	BRACKET, ROPE	
280	4-912-517-01	ROPE	
281	4-908-553-01	SPRING, COMPRESSION (ROPE)	
282	4-912-512-01	CUSHION (A)	
283	X-4908-506-1	PLATE ASSY, DISK	
284	*4-908-964-01	SHEET, PS, DT	
285	4-908-519-01	PULLEY (A)	
286	4-908-525-01	PULLEY (C)	
287	3-671-077-00	BELT, FF	
288	4-908-591-01	BELT, DRIVING	
289	4-908-524-01	PULLEY (B)	
290	4-908-543-01	RETAINER, DISK	
291	7-624-106-04	STOP RING 3.0, TYPE -E	
292	7-621-775-80	SCREW +B 2.6X16	
293	7-621-759-60	+PSW, 2.6X8	
294	7-621-259-10	SCREW +P 2.6X3	
295	7-682-546-04	SCREW +BVTT 3X5 (S)	
296	7-621-775-10	SCREW +B 2.6X4	
297	7-685-646-71	SCREW +BVTP 3X8 TYPE2 SLIT	
298	7-685-791-04	SCREW +BVTT 2.6X5 (S)	
299	7-685-876-01	SCREW +BVTT 3X16 (S)	
300	7-682-646-01	SCREW +PS 3X5	
501	7-685-132-19	SCREW +BTP 2.6X5 TYPE2 N-S	
912	*1-617-230-11	PC BOARD, LOADING MOTOR	
M652	A-4608-303-A	MOTOR ASSY, LOADING	

www.hifiengine.com

AEP Model: Serial No. 508,301 ~
G-AEP Model: Serial No. 504,601 ~
UK Model: Serial No. 603,401 ~

E2 Model: Serial No. 402,201 ~
E3 Model: Serial No. 304,101 ~

(3) BU-1C

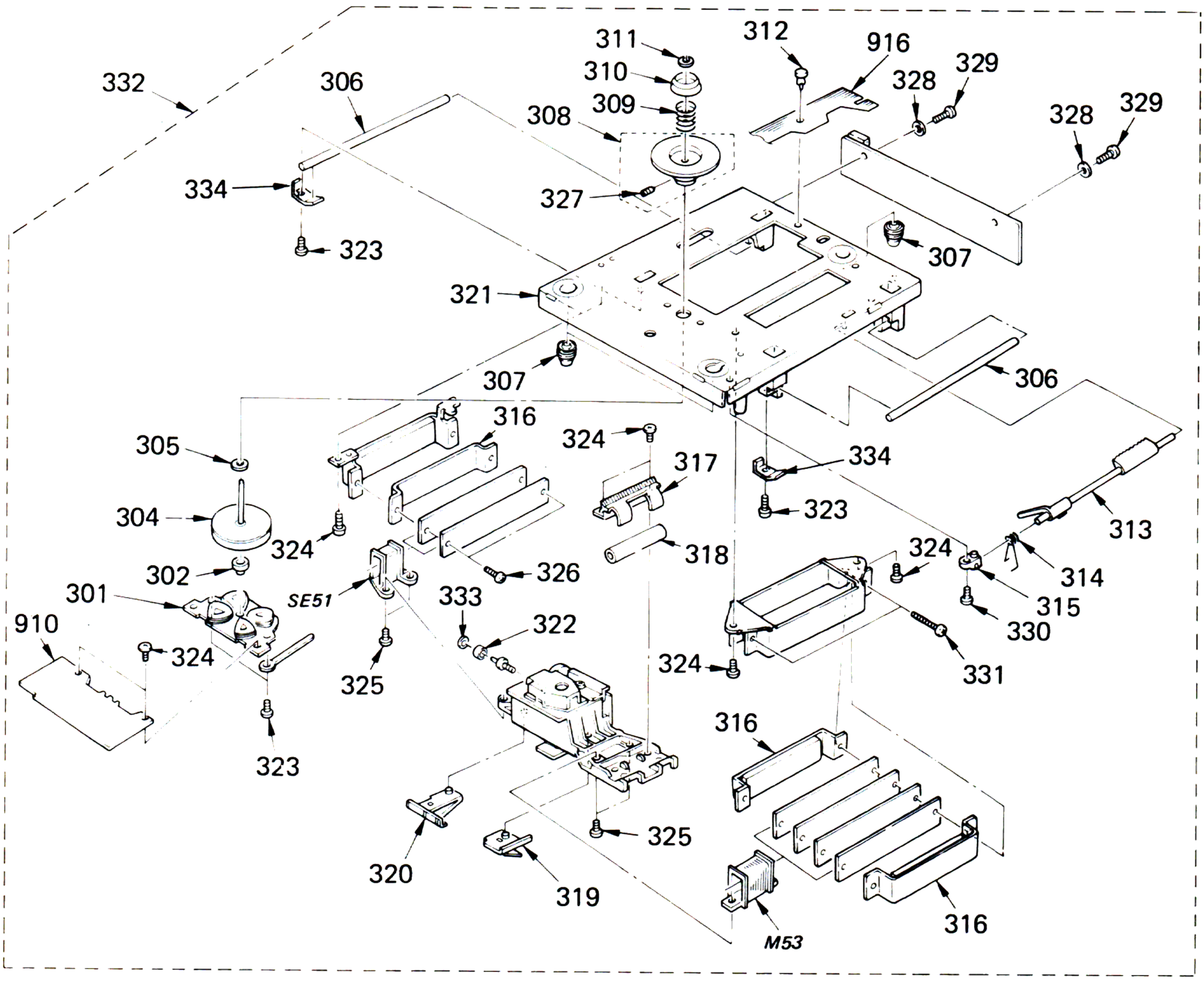

No.	Part No.	Description	Remarks
301	A-4675-068-A	BRACKET ASSY, MOTOR	
302	2-622-105-01	RETAINER, THRUST	
304	A-4675-069-A	ROTOR ASSY	
305	3-701-439-21	WASHER	
306	4-908-201-01	SHAFT, SLIDE	
307	4-908-593-01	INSULATOR	
308	X-4908-202-1	PULLEY ASSY, DISK	
309	4-908-213-01	SPRING, COMPRESSION	
310	4-908-212-01	CAP, CENTERING	
311	3-558-708-21	WASHER, STOPPER	
312	3-531-576-01	RIVET	
313	4-908-227-01	LEVER, LOCK	
314	4-908-230-01	SPRING	
315	4-908-220-01	HOLDER, ROD	
316	*A-4675-110-A	MAGNET ASSY, LINEAR	
317	4-908-224-01	HOLDER, BEARING	
318	4-908-221-01	BEARING	

No.	Part No.	Description	Remarks
319	4-908-225-01	RETAINER (A), LEAD	
320	4-908-219-01	RETAINER (B), LEAD	
321	*A-4675-112-A	BASE ASSY	
322	4-908-208-01	BEARING (NO-FLANGE), BALL	
323	7-685-134-19	SCREW +P 2.6X8 TYPE2 SLIT	
324	7-621-775-10	SCREW +B 2.6X4	
325	7-621-775-20	SCREW +B 2.6X5	
326	7-685-793-04	SCREW +BVTT 2.6X8 (S)	
327	7-621-734-09	SET-SCT, HEX. 2.6X3	
328	7-688-002-01	W 2.6, SMALL	
329	7-685-864-01	SCREW +BVTT 2.6X10 (S)	
330	7-621-775-20	+B 2.6×5	
331	7-685-867-01	SCREW +BVTT 2.6X16 (S)	
332	X-4908-207-1	BC-1C	301-334
333	7-624-105-04	STOP RING 2.3, TYPE -E	
334	4-908-245-01	RETAINER (C), SHAFT, SLIDE	
910	*A-4656-008-A	MOUNTED PCB, MOTOR	
916	A-4646-215-A	MOUNTED PCB, FLEXIBLE	

www.hifiengine.com

AEP Model: Serial No. 508,301 ~
G-AEP Model: Serial No. 504,601 ~
UK Model: Serial No. 603,401 ~
E2 Model: Serial No. 402,201 ~
E3 Model: Serial No. 304,101 ~

ELECTRICAL PARTS LIST

NOTE:
· Items marked " * " are not stocked since they are seldom required for routine service. Some delay should be anticipated when ordering these items.

RESISTORS
· All resistors are in ohms.
· F : nonflammable

CAPACITORS:
MF:μF, PF:μμF.

COILS
· MMH : mH, UH : μH

SEMICONDUCTORS
In each case, U : μ, for example:
UA...: μA..., UPA...: μPA..., UPC...: μPC, UPD...: μPD...

ELECTRICAL PARTS

Ref.No.	Part No.	Description			
910	*A-4656-008-A	MOUNTED PCB, MOTOR			
911	*1-617-229-11	PC BOARD, LOAD OUT SW			
912	*1-617-230-11	PC BOARD, LOADING MOTOR			
913	*1-617-231-11	PC BOARD, CHUCKING MOTOR			
914	*1-617-232-11	PC BOARD, L.C. SW			
915	*1-617-233-11	PC BOARD, IN SW			
916	A-4646-215-A	MOUNTED PCB, FLEXIBLE			
C51	1-135-008-00	TANTAL. CHIP	2.2MF	20%	6.3V
C151	1-162-302-31	CERAMIC	0.0022MF	20%	16V
C152	1-162-302-31	CERAMIC	0.0022MF	20%	16V
C153	1-161-494-00	CERAMIC	0.022MF	30%	25V
C154	1-161-494-00	CERAMIC	0.022MF	30%	25V
C651	1-136-157-00	FILM	0.022MF	5%	50V
C652	1-136-157-00	FILM	0.022MF	5%	50V
C653	1-136-157-00	FILM	0.022MF	5%	50V
C654	1-130-479-00	MYLAR	0.0047MF	5%	50V
C655	1-130-479-00	MYLAR	0.0047MF	5%	50V
CNJ151	*1-560-073-00	PIN, CONNECTOR			
CNP602	*1-564-505-11	PLUG, CONNECTOR 2P			
CNP603	*1-564-505-21	PLUG, CONNECTOR 2P			
CNP604	*1-564-505-11	PLUG, CONNECTOR 2P			
CNP606	*1-564-506-11	PLUG, CONNECTOR 3P			
D51	8-719-901-33	DIODE 1SS133			
D651	8-719-200-02	DIODE 10E-2			
D652	8-719-200-02	DIODE 10E-2			
D653	8-719-200-02	DIODE 10E-2			
D654	8-719-200-02	DIODE 10E-2			
H151	8-719-800-31	DIODE THS103A-1			
H152	8-719-800-31	DIODE THS103A-1			
IC151	8-759-705-58	IC NJM4558D-D			

ELECTRICAL PARTS

Ref.No.	Part No.	Description			
L51	1-408-563-00	MICRO INDUCTOR 10UH			
M53	1-422-197-13	COIL (DRIVE)			
M651	X-4902-019-1	MOTOR ASSY, CHUCKING			
M652	A-4608-303-A	MOTOR ASSY, LOADING			
Q151	8-729-206-49	TRANSISTOR 2SC3666Y			
Q152	8-729-206-43	TRANSISTOR 2SA1426Y			
Q153	8-729-206-49	TRANSISTOR 2SC3666Y			
Q154	8-729-206-43	TRANSISTOR 2SA1426Y			
Q651	8-729-378-91	TRANSISTOR 2SD789			
R151	1-247-831-00	CARBON	1K	5%	1/6W
R152	1-247-831-00	CARBON	1K	5%	1/6W
R153	1-247-831-00	CARBON	1K	5%	1/6W
R154	1-247-831-00	CARBON	1K	5%	1/6W
R155	1-247-831-00	CARBON	1K	5%	1/6W
R156	1-247-831-00	CARBON	1K	5%	1/6W
R157	1-247-887-00	CARBON	220K	5%	1/6W
R158	1-247-887-00	CARBON	220K	5%	1/6W
R159	1-247-887-00	CARBON	220K	5%	1/6W
R160	1-247-887-00	CARBON	220K	5%	1/6W
R651	1-247-831-00	CARBON	1K	5%	1/6W
R652	1-247-831-00	CARBON	1K	5%	1/6W
S651	1-554-205-00	SWITCH, PUSH (LOAD IN DET)			
S652	1-554-205-00	SWITCH, PUSH (LOAD OUT DET)			
S653	1-553-636-00	SWITCH, MICRO (MOTOR SWITCHING)			
S654	1-570-447-11	SWITCH, MICRO (CHACKING)			
SE51	1-422-198-11	COIL (SENSOR)			

www.hifiengine.com