BDP-S500

RMT-B101A/B101P

SERVICE MANUAL

Ver. 1.1 2008.1

US Model
Canadian Model
AEP Model
UK Model
Russian Model
Australian Model

SPECIFICATIONS

System

Laser: Semiconductor laser

Outputs

(**Jack name:** Jack type/Output level/ Load impedance)

AUDIO OUT L/R:
Phono jack/2 Vrms/10 kilohms

DIGITAL OUT (OPTICAL):
Optical output jack/–18 dBm (wave length 660 nm)

DIGITAL OUT (COAXIAL):
Phono jack/0.5 Vp-p/75 ohms

5.1CH OUTPUT:
Phono jack/2 Vrms/10 kilohms

HDMI OUT:
HDMI 19-pin standard connector

COMPONENT VIDEO OUT(Y, P_B, P_R):
Phono jack/Y: 1.0 Vp-p/P_B, P_R: progressive or interlace
= 0.7 Vp-p/75 ohms

VIDEO: Phono jack/1.0 Vp-p/75 ohms

S VIDEO: 4-pin mini DIN/Y:
1.0 Vp-p, C: 0.286 Vp-p/75 ohms

General

Power requirements:
120 V AC, 60 Hz (US, Canadian)
220-240 V AC, 50/60 Hz
(Except US, Canadian)

Power consumption: 33 W

Dimensions (approx.):
430 × 99.2 × 361 mm (17 × 4 × 14 $^1/_4$ in.) (width/height/depth) incl. projecting parts

Mass (approx.): 4.8 kg (10 $^3/_4$ lb)

Operating temperature:
5 ºC to 35 ºC (41°F to 95°F)

Operating humidity:
25 % to 80 %

Supplied accessories

- Video cord (phono plug × 1) (1)
- Stereo audio cord (phono plug × 2) (1)
- Power cord (1)
- Remote commander (remote) (1)
- Size AA (R6) batteries (2)
- GNU License Information (English only) (1) (Except US, Canadian)

Specifications and design are subject to change without notice.

BLU-RAY DISC PLAYER

SONY

SAFETY CHECK-OUT

After correcting the original service problem, perform the following safety checks before releasing the set to the customer:

1. Check the area of your repair for unsoldered or poorly-soldered connections. Check the entire board surface for solder splashes and bridges.
2. Check the interboard wiring to ensure that no wires are "pinched" or contact high-wattage resistors.
3. Look for unauthorized replacement parts, particularly transistors, that were installed during a previous repair. Point them out to the customer and recommend their replacement.
4. Look for parts which, though functioning, show obvious signs of deterioration. Point them out to the customer and recommend their replacement.
5. Check the line cord for cracks and abrasion. Recommend the replacement of any such line cord to the customer.
6. Check the B+ voltage to see it is at the values specified.
7. Check the antenna terminals, metal trim, "metallized" knobs, screws, and all other exposed metal parts for AC leakage. Check leakage as described below.

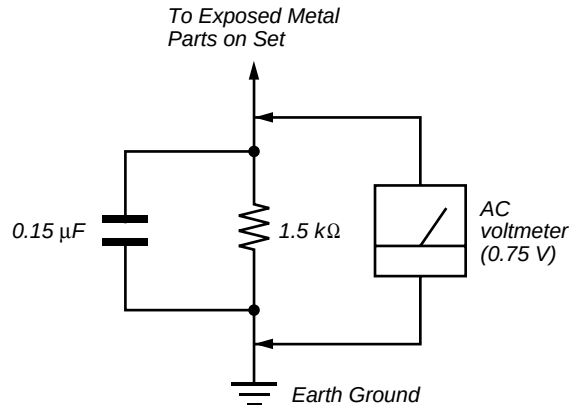

Fig. A. Using an AC voltmeter to check AC leakage.

WARNING!!

WHEN SERVICING, DO NOT APPROACH THE LASER EXIT WITH THE EYE TOO CLOSELY. IN CASE IT IS NECESSARY TO CONFIRM LASER BEAM EMISSION, BE SURE TO OBSERVE FROM A DISTANCE OF MORE THAN 25 cm FROM THE SURFACE OF THE OBJECTIVE LENS ON THE OPTICAL PICK-UP BLOCK.

SAFETY-RELATED COMPONENT WARNING!!

COMPONENTS IDENTIFIED BY MARK ⚠ OR DOTTED LINE WITH MARK ⚠ ON THE SCHEMATIC DIAGRAMS AND IN THE PARTS LIST ARE CRITICAL TO SAFE OPERATION. REPLACE THESE COMPONENTS WITH SONY PARTS WHOSE PART NUMBERS APPEAR AS SHOWN IN THIS MANUAL OR IN SUPPLEMENTS PUBLISHED BY SONY.

ATTENTION AU COMPOSANT AYANT RAPPORT À LA SÉCURITÉ!

LES COMPOSANTS IDENTIFIÉS PAR UNE MARQUE ⚠ SUR LES DIAGRAMMES SCHÉMATIQUES ET LA LISTE DES PIÈCES SONT CRITIQUES POUR LA SÉCURITÉ DE FONCTIONNEMENT. NE REMPLACER CES COM- POSANTS QUE PAR DES PIÈCES SONY DONT LES NUMÉROS SONT DONNÉS DANS CE MANUEL OU DANS LES SUPPLÉMENTS PUBLIÉS PAR SONY.

LEAKAGE TEST

The AC leakage from any exposed metal part to earth ground and from all exposed metal parts to any exposed metal part having a return to chassis, must not exceed 0.5 mA (500 microamperes). Leakage current can be measured by any one of three methods.

1. A commercial leakage tester, such as the Simpson 229 or RCA WT-540A. Follow the manufacturers' instructions to use these instruments.
2. A battery-operated AC milliammeter. The Data Precision 245 digital multimeter is suitable for this job.
3. Measuring the voltage drop across a resistor by means of a VOM or battery-operated AC voltmeter. The "limit" indication is 0.75V, so analog meters must have an accurate low-voltage scale. The Simpson 250 and Sanwa SH-63Trd are examples of a passive VOM that is suitable. Nearly all battery operated digital multimeters that have a 2V AC range are suitable. (See Fig. A)

CAUTION:

The use of optical instrument with this product will increase eye hazard.

CAUTION
Use of controls or adjustments or performance of procedures other than those specified herein may result in hazardous radiation exposure.

This label is located on the laser protective housing inside the enclosure.

This appliance is classified as a CLASS1 LASER product. The CLASS1 LASER PRODUCT MARKING is located on the laser protective housing inside the enclosure.

Unleaded solder

Boards requiring use of unleaded solder are printed with the lead-free mark (LF) indicating the solder contains no lead.
(Caution: Some printed circuit boards may not come printed with the lead free mark due to their particular size.)

: LEAD FREE MARK

Unleaded solder has the following characteristics.

- Unleaded solder melts at a temperature about 40°C higher than ordinary solder.
  Ordinary soldering irons can be used but the iron tip has to be applied to the solder joint for a slightly longer time.
  Soldering irons using a temperature regulator should be set to about 350°C.
  Caution: The printed pattern (copper foil) may peel away if the heated tip is applied for too long, so be careful!
- Strong viscosity
  Unleaded solder is more viscous (sticky, less prone to flow) than ordinary solder so use caution not to let solder bridges occur such as on IC pins, etc.
- Usable with ordinary solder
  It is best to use only unleaded solder but unleaded solder may also be added to ordinary solder.

TABLE OF CONTENTS

Section	Title	Page
SERVICE NOTE		
1.	DISC REMOVAL PROCEDURE IF THE TRAY CANNOT BE EJECTED (FORCED EJECTION)	4
2.	TEST DISC	4
3.	POSITION OF COUNTERMEASURE PARTS	17
1.	GENERAL	
	Getting Started	1-2
	Basic Operations	1-5
	Watching Movie Files	1-8
	Listening to Music Files	1-9
	Viewing Photo Files	1-10
	Changing the Initial Settings	1-11
	Additional Information	1-13
2.	DISASSEMBLY AND REASSEMBLY	
2-1.	Disassembly Flow	2-1
2-2.	Upper Case	2-1
2-3.	Front Display Block Assy	2-2
2-4.	Tray Cover Assy	2-2
2-5.	BD Drive (Service Use)	2-3
2-6.	MAIN Board	2-3
2-7.	AU-258 Board	2-4
2-8.	Power Block	2-4
2-9.	Circuit Boards Location	2-5
3.	BLOCK DIAGRAMS	
3-1.	Main Block Diagram	3-1
3-2.	Audio Block Diagram	3-3
3-3.	FL/FR Block Diagram	3-5
3-4.	Power 1 Block Diagram	3-7
3-5.	Power 2 Block Diagram	3-9
3-6.	Power 3 Block Diagram	3-11
4.	SCHEMATIC DIAGRAMS AND PRINTED WIRING BOARDS	
4-1.	Frame Schematic Diagram	4-1
4-2.	Printed Wiring Boards and Schematic Diagrams	4-5
	AU-258 (ANALOG AUDIO) Schematic Diagram	4-5
	AU-258 Printed Wiring Board	4-7
	FL-180 (1/2) (INDICATOR DRIVE) Schematic Diagram	4-11
	FL-180 (2/2) (DOOR DRIVE) Schematic Diagram	4-13
	FL-180 Printed Wiring Board	4-15
	FR-276 Printed Wiring Board	4-19
	FR-276 (LED DRIVE, FUNCTION KEY) Schematic Diagram	4-23
	IR-063 (CONNECTOR) Schematic Diagram	4-25
	IR-063 Printed Wiring Board	4-26
5.	TROUBLESHOOTING	
	Main Set, Power Supply Section	5-1
	Operation&Display Section	5-9
	Audio Section	5-13
	FL Section	5-14
6.	REPAIR PARTS LIST	
6-1.	Exploded Views	6-1
6-1-1.	Case Assy	6-1
6-1-2.	Main Chassis Block	6-2
6-1-3.	Main Block	6-3
6-2.	Electrical Parts List	6-4

SERVICE NOTE

1. DISC REMOVAL PROCEDURE IF THE TRAY CANNOT BE EJECTED (FORCED EJECTION)

1. Remove the upper case. (Refer to page 2-1)
2. Remove the front display block assy. (Refer to page 2-2)
3. Insert a clip in the hole of a drive and open a tray.

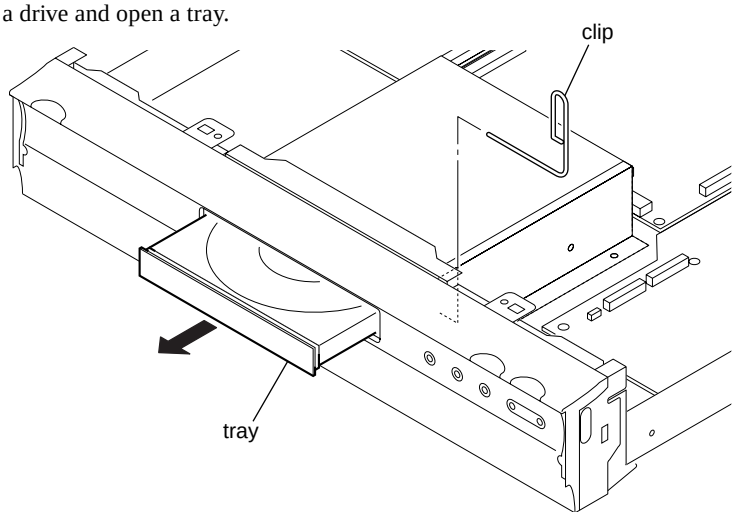

2. TEST DISC

Part No.	Description	Layer
J-6090-199-A	BLX-104	Single Layer
J-6090-200-A	BLX-204	Dual Layer
3-702-101-01	CD (YEDS-18)	
J-6090-088-A	HLX-504	Single Layer (NTSC)
J-6090-089-A	HLX-505	Dual Layer (NTSC)
J-6090-077-A	HLX-506	Single Layer (PAL)
J-6090-078-A	HLX-507	Dual Layer (PAL)

2-1. Operation and Display

Check Items

1) BLX-104
  1. Select 23.976Hz 1080p
  2. Play “4.Motion pictures”
  3. Check whether player can play back or not
  4. Check each outputs
     Video:
     Composite/S Video/ component/HDMI
     Audio:
     Digital out(Coaxial/Optical)/Audio out/5.1Ch output

* When 1080/24p monitor is nothing, 1080i(59.94Hz or 50Hz) can use instead of 1080/24p.
However this is temporary correspondence.

2) BLX-204
  1. Select 1080i(59.94Hz or 50Hz)
  2. Play “4.Motion pictures”
  3. Check whether player can play back or not
     (Check the picture and sound output)

3) CD (YEDS-18)
  Check whether player can play back or not
  (Check the sound output)

4) HLX-504/505(NTSC) HLX506/507(PAL)
  1. After displayed Main Menu, select “1.Video”
  2. Play “1.Color Bar 100%”
     (Check the picture and sound output)
  3. Return to Menu
  4. Play “Demonstration 4:3” or “5.Demonstration 16:9”
     (Check the picture and sound output)

2-1-1. BLX-104 Menu Function (1)
Main Menu

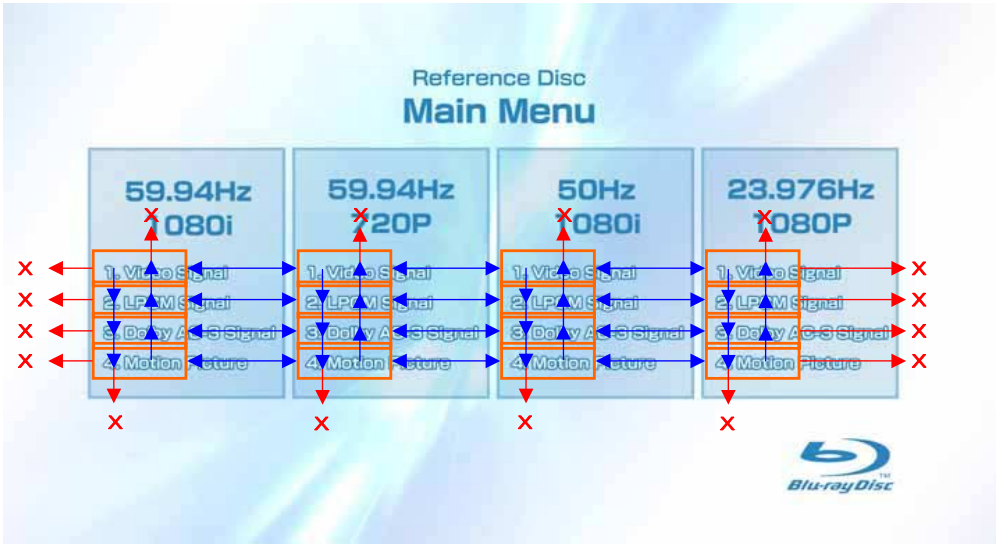

1) When the disc is inserted, 1. Video Signal of 59.94Hz/1080i of the Main Menu is selectively displayed.

2-1-2. BLX-104 Menu Function (2)
Main Menu

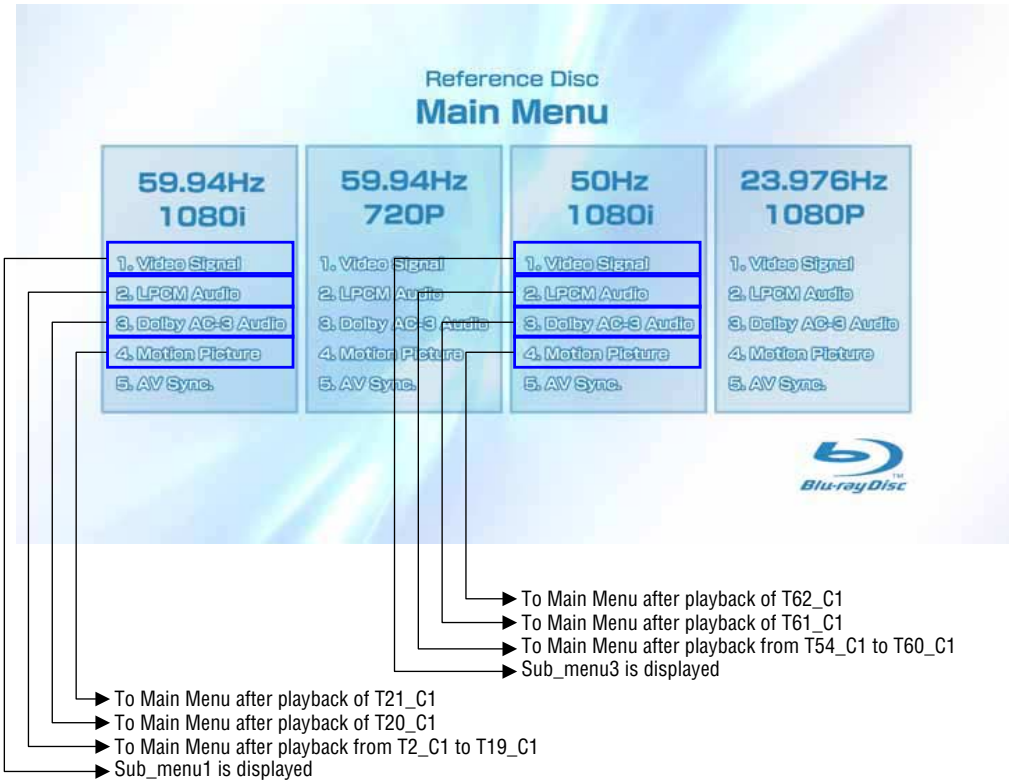

* When returning to Main Menu after playback from each button of 59.94Hz/1080i, 1. Video Signal of 59.94Hz/1080i is selectively displayed.
* When returning to Main Menu after playback from each button of 50Hz/1080i, 1. Video Signal of 50Hz/1080i is selectively displayed.
* 5. AV Sync does not operate.

Note:

Txx_ Cxx
- Cxx: Chapter No.
- Txx: Title No.

2-1-3. BLX-104 Menu Function (3)
Main Menu

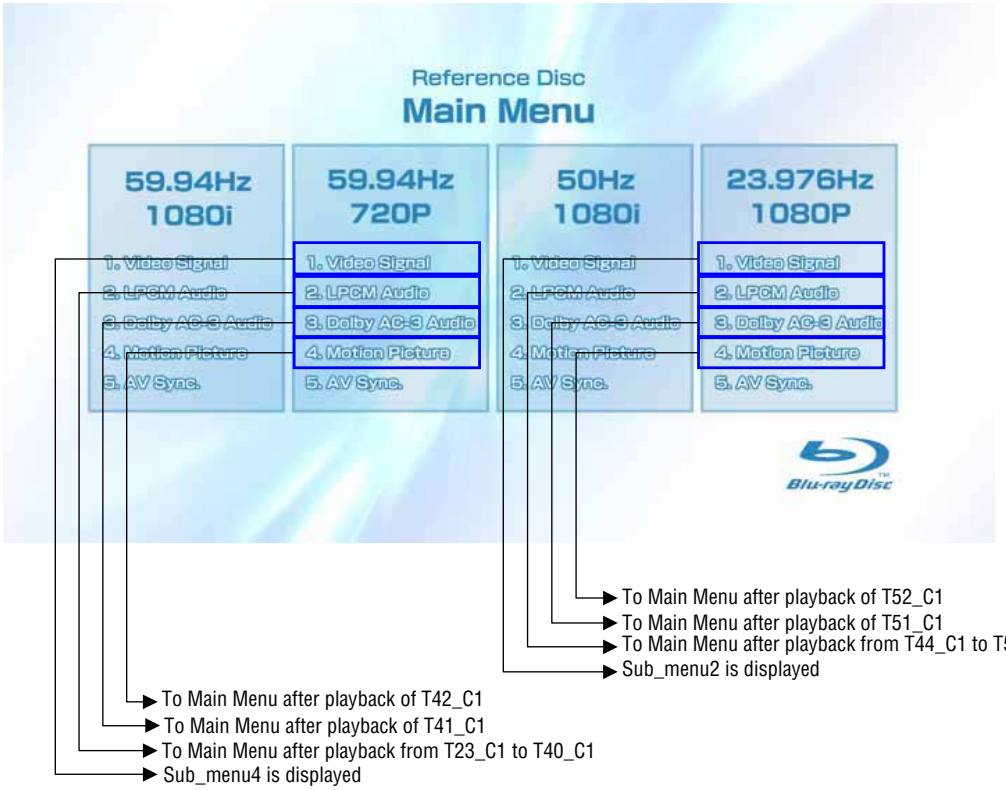

* When returning to Main Menu after playback from each button of 59.94Hz/720P, 1. Video Signal of 59.94Hz/720P is selectively displayed.
* When returning to Main Menu after playback from each button of 23.976Hz/1080P, 1. Video Signal of 23.976Hz/1080P is selectively displayed.
* 5. AV Sync does not operate.

2-1-4. BLX-104 Menu Function (4)
Sub menu1

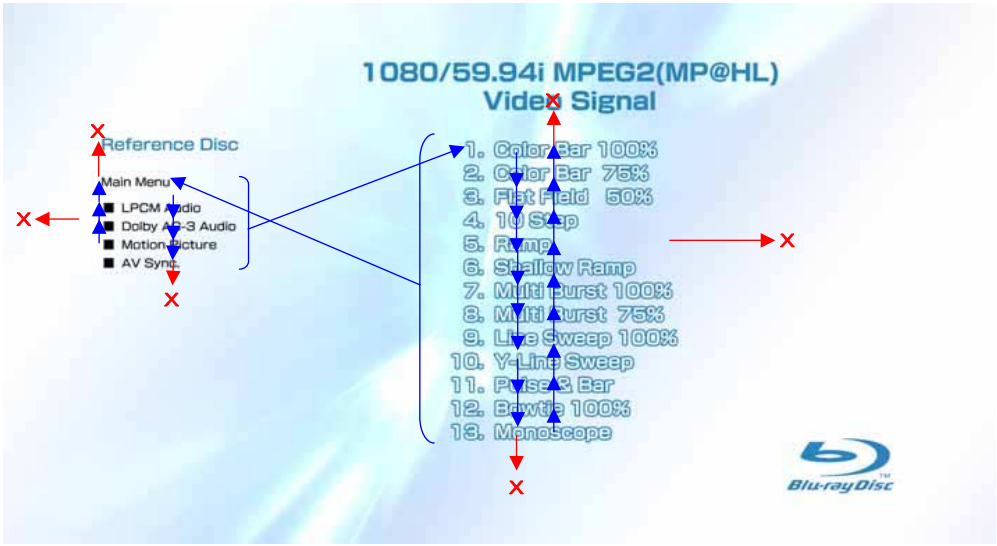

1) At the display of Sub menu1, 1. Color Bar 100% is selectively displayed.
2) Selection of 1. Color Bar 100% ⟶ Return to Sub menu1 after seamless playback from T1_C1 to T1_C13. 1. Color Bar 100% is selectively displayed on Sub menu1 screen.
3) Selection of 2. Color Bar 75% ⟶ Return to Sub menu1 after seamless playback from T1_C2 to T1_C13. 1. Color Bar 100% is selectively displayed on Sub menu1 screen.
4) At the selection of 3 - 13, item 3 mentioned above is executed as the routine.
5) At the display of Sub menu1, Main Menu is selected ⟶ Jump to Main Menu. At the display of Main Menu, 1. Video Signal of 59.94Hz/1080i is selectively displayed.
6) Selection of LPCM Audio ⟶ Playback from T2_C1 to T19_C1. SubPic that corresponds to Audio stream 1 is forcibly displayed. During the playback, when audio channel changes, the caption that corresponds to each audio stream is forcibly displayed. Return to Sub menu1 after playback. 1. Color Bar 100% is selectively displayed on Sub menu1 screen.
7) Selection of Dolby AC-3 Audio ⟶ Playback of T20_C1. SubPic that corresponds to Audio stream 1 is forcibly displayed. During the playback, when audio channel changes, the caption that corresponds to each audio stream is forcibly displayed. Return to Sub menu1 after playback. 1. Color Bar 100% is selectively displayed on Sub menu1 screen.
8) Selection of Motion Picture ⟶ Return to Sub menu1 after playback of T21_C1. 1. ColorBar 100% is selectively displayed on Sub menu1 screen.
9) At the selection of Main Manu, 1. VideoSignal of 1080/59.94i of Main Menu is selectively displayed.
10) AV Sync does not operate.

2-1-5. BLX-104 Menu Function (5)
Sub menu2

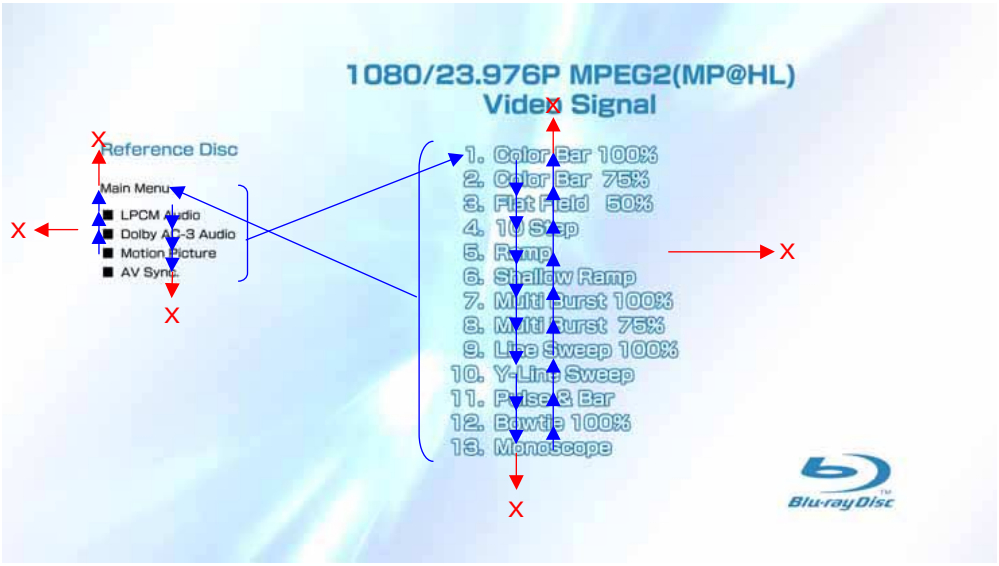

1) At the display of Sub menu2, 1. Color Bar 100% is selectively displayed.
2) Selection of 1. Color Bar 100% ⟶ Return to Sub menu2 after seamless playback from T43_C1 to T43_C13. 1. Color Bar 100% is selectively displayed on Sub menu2 screen.
3) Selection of 2. Color Bar 75% ⟶ Return to Sub menu2 after seamless playback from T43_C2 to T43_C13. 1. Color Bar 100% is selectively displayed on Sub menu2 screen.
4) At the selection of 3 - 13, item 3 mentioned above is executed as the routine.
5) At the display of Sub menu2, Main Menu is selected ⟶ Jump to Main Menu. At the display of Main Menu, 1. Video Signal of 23.976Hz/1080P is selectively displayed.
6) Selection of LPCM Audio ⟶ Playback from T44_C1 to T50_C1. SubPic that corresponds to Audio stream 1 is forcibly displayed. During the playback, when audio channel changes, the caption that corresponds to each audio stream is forcibly displayed. Return to Sub menu2 after playback. 1. Color Bar 100% is selectively displayed on Sub menu2 screen.
7) Selection of Dolby AC-3 Audio ⟶ Playback of T51_C1. SubPic that corresponds to Audio stream 1 is forcibly displayed. During the playback, when audio channel changes, the caption that corresponds to each audio stream is forcibly displayed. Return to Sub menu2 after playback. 1. Color Bar 100% is selectively displayed on Sub menu2 screen.
8) Selection of Motion Picture ⟶ Return to Sub menu2 after playback of T52_C1. 1. Color Bar 100% is selectively displayed on Sub menu2 screen.
9) At the selection of Main Manu, 1. Video Signal of 1080/23.976P of Main Menu is selectively displayed.
10) AV Sync does not operate.

2-1-6. BLX-104 Menu Function (6)
Sub menu3

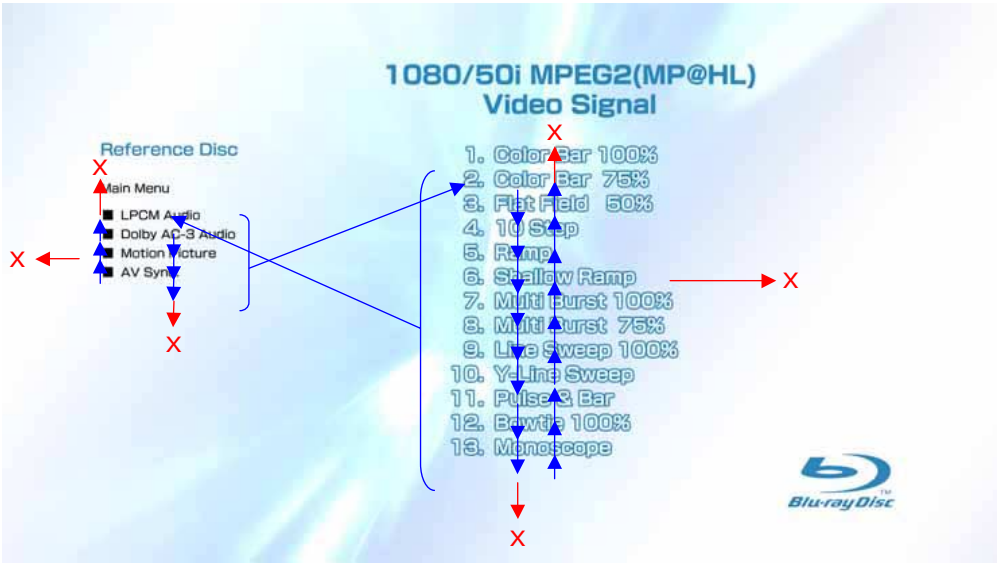

1) At the display of Sub menu3, 1. Color Bar 100% is selectively displayed.
2) Selection of 1. Color Bar 100% ⟶ Return to Sub menu3 after seamless playback from T53_C1 to T53_C13. 1. Color Bar 100% is selectively displayed on Sub menu3 screen.
3) Selection of 2. Color Bar 75% ⟶ Return to Sub menu3 after seamless playback from T53_C2 to T53_C13. 1. Color Bar 100% is selectively displayed on Sub menu3 screen.
4) At the selection of 3 - 13, item 3 mentioned above is executed as the routine.
5) At the display of Sub menu3, Main Menu is selected ⟶ Jump to Main Menu. At the display of Main Menu, 1. Video Signal of 50Hz/1080i is selectively displayed.
6) Selection of LPCM Audio ⟶ Playback from T54_C1 to T60_C1. SubPic that corresponds to Audio stream 1 is forcibly displayed. During the playback, when audio channel changes, the caption that corresponds to each audio stream is forcibly displayed. Return to Sub menu3 after playback. 1. Color Bar 100% is selectively displayed on Sub menu3 screen.
7) Selection of Dolby AC-3 Audio ⟶ Playback of T61_C1. SubPic that corresponds to Audio stream 1 is forcibly displayed. During the playback, when audio channel changes, the caption that corresponds to each audio stream is forcibly displayed. Return to Sub menu3 after playback. 1. Color Bar 100% is selectively displayed on Sub menu3 screen.
8) Selection of Motion Picture ⟶ Return to Sub menu3 after playback of T62_C1. 1. Color Bar 100% is selectively displayed on Sub menu3 screen.
9) At the selection of Main Manu, 1. Video Signal of 1080/50i of Main Menu is selectively displayed.
10) AV Sync does not operate.

2-1-7. BLX-104 Menu Function (7)
Sub menu4

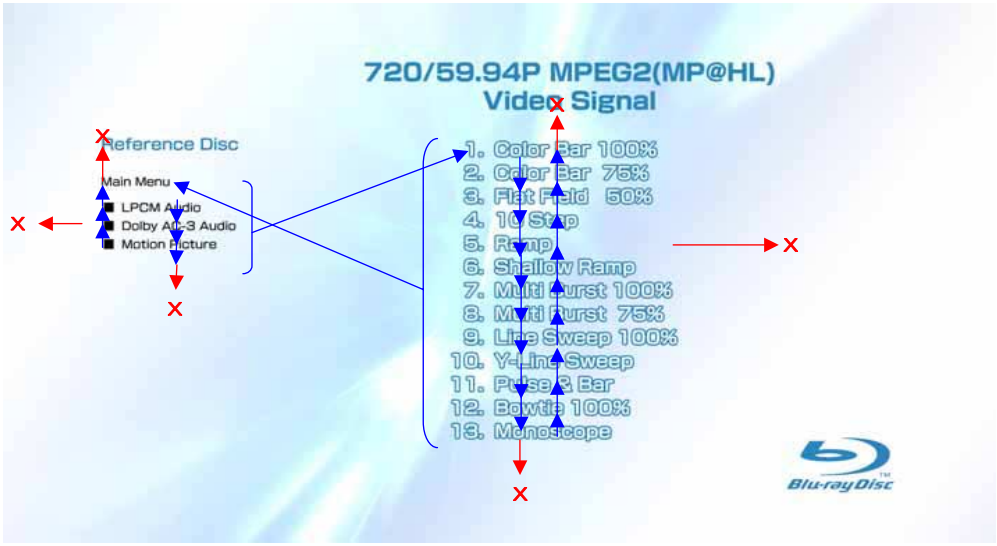

1) At the display of Sub menu4, 1. Color Bar 100% is selectively displayed.
2) Selection of 1. Color Bar 100% ⟶ Return to Sub menu4 after seamless playback from T22_C1 to T22_C13. 1. Color Bar 100% is selectively displayed on Sub menu4 screen.
3) Selection of 2. Color Bar 75% ⟶ Return to Sub menu4 after seamless playback from T22_C2 to T22_C13. 1. Color Bar 100% is selectively displayed on Sub menu4 screen.
4) At the selection of 3 - 13, item 3 mentioned above is executed as the routine.
5) At the display of Sub menu4, Main Menu is selected ⟶ Jump to Main Menu. At the display of Main Menu, 1. Video Signal of 59.94Hz/720P is selectively displayed.
6) Selection of LPCM Audio ⟶ Playback from T44_C1 to T50_C1. SubPic that corresponds to Audio stream 1 is forcibly displayed. During the playback, when audio channel changes, the caption that corresponds to each audio stream is forcibly displayed. Return to Sub menu4 after playback. 1. Color Bar 100% is selectively displayed on Sub menu4 screen.
7) Selection of Dolby AC-3 Audio ⟶ Playback of T51_C1. SubPic that corresponds to Audio stream 1 is forcibly displayed. During the playback, when audio channel changes, the caption that corresponds to each audio stream is forcibly displayed. Return to Sub menu4 after playback. 1. Color Bar 100% is selectively displayed on Sub menu4 screen.
8) Selection of Motion Picture ⟶ Return to Sub menu4 after playback of T52_C1. 1. Color Bar 100% is selectively displayed on Sub menu4 screen.
9) At the selection of Main Manu, 1. Video Signal of 720/59.94P of Main Menu is selectively displayed.
10) AV Sync does not operate.

2-2-1. BLX-204 Menu Function (1)
Main Menu

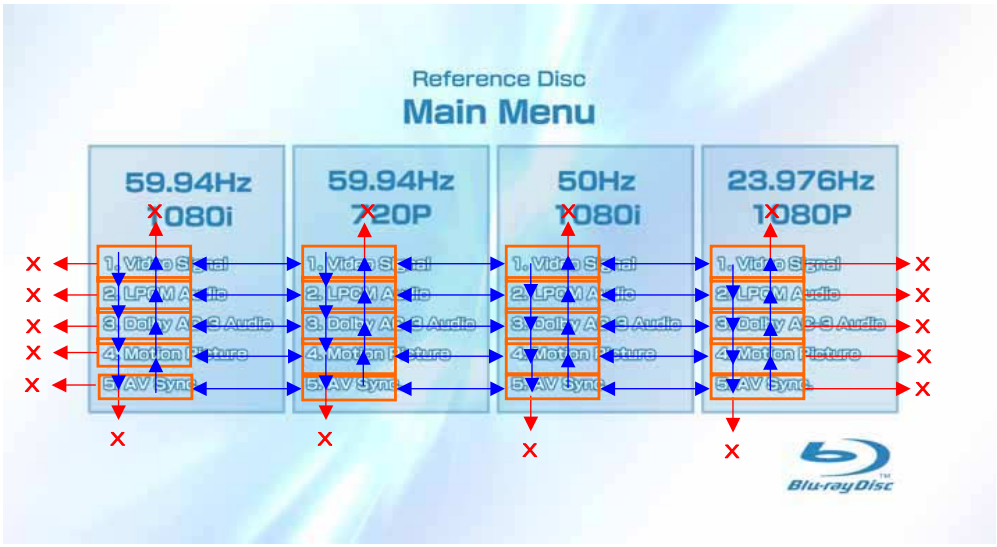

1) When the disc is inserted, 1. Video Signal of 59.94Hz/1080i of the Main Menu is selectively displayed.

2-2-2. BLX-204 Menu Function (2)
Main Menu

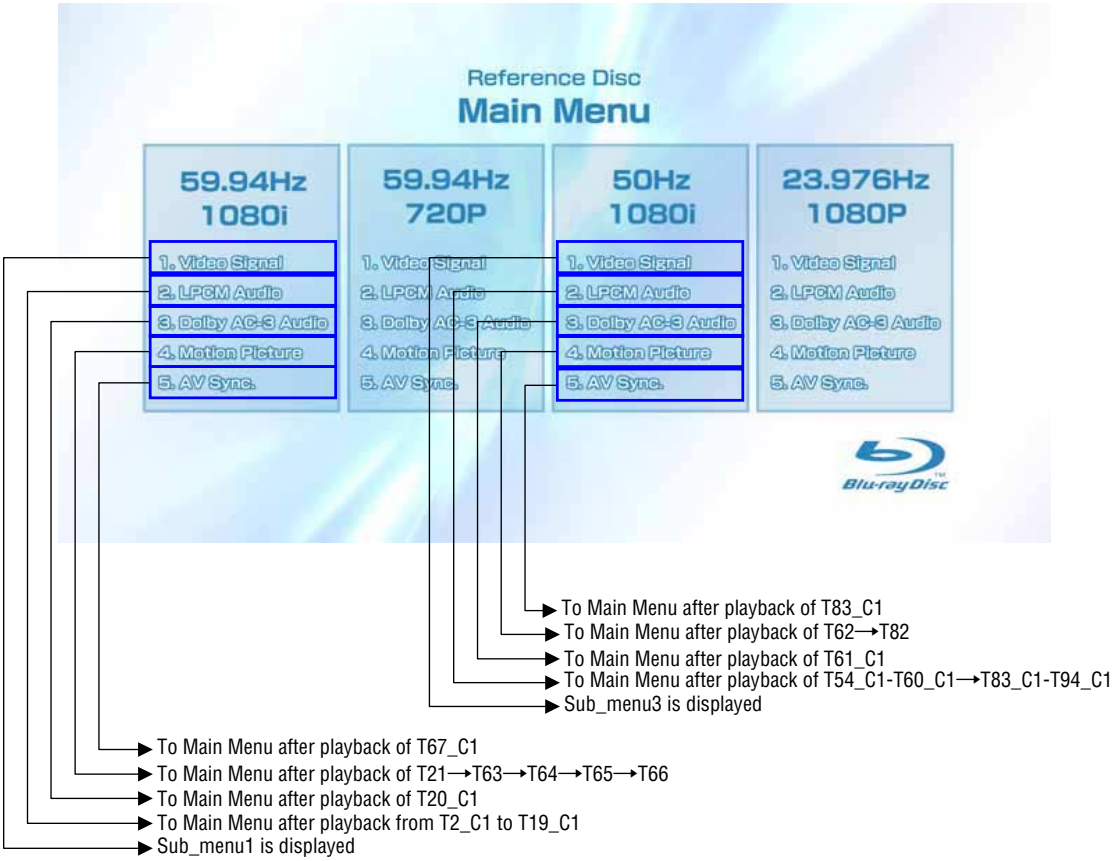

* When returning to Main Menu after playback from each button of 59.94Hz/1080i, 1. Video Signal of 59.94Hz/1080i is selectively displayed.

* When returning to Main Menu after playback from each button of 50Hz/1080i, 1. Video Signal of 50Hz/1080i is selectively displayed.

Note:

Txx_ Cxx
- Cxx: Chapter No.
- Txx: Title No.

2-2-3. BLX-204 Menu Function (3)
Main Menu

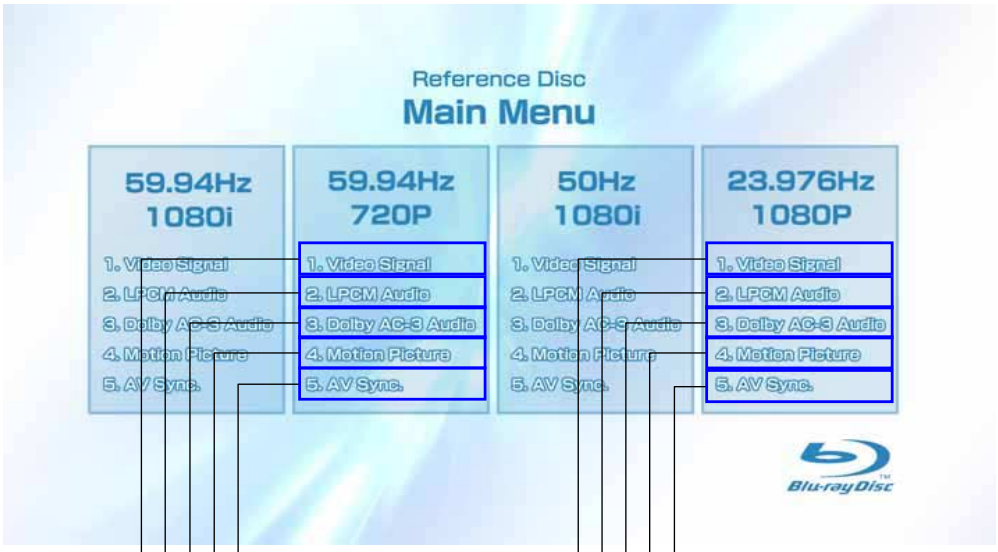

To Main Menu after playback of T70_C1
To Main Menu after playback of T52_C1→T69
To Main Menu after playback of T51_C1
To Main Menu after playback of T44_C1-T50_C1→T71_C1-T81_C1
Sub_menu2 is displayed
To Main Menu after playback of T68_C1
To Main Menu after playback of T42_C1
To Main Menu after playback of T41_C1
To Main Menu after playback from T23_C1 to T40_C1
Sub_menu4 is displayed

* When returning to Main Menu after playback from each button of 59.94Hz/720P, 1. Video Signal of 59.94Hz/720P is selectively displayed.
* When returning to Main Menu after playback from each button of 23.976Hz/1080P, 1. Video Signal of 23.976Hz/1080P is selectively displayed.

2-2-4. BLX-204 Menu Function (4)
Sub menu 1

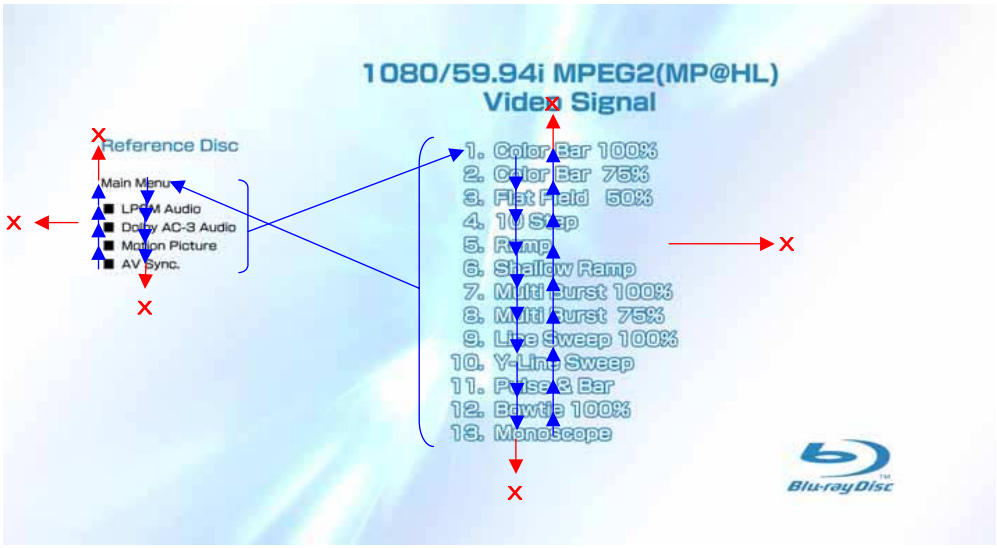

1) At the display of Sub menu1, 1. Color Bar 100% is selectively displayed.
2) Selection of 1. Color Bar 100% ⟶ Return to Sub menu1 after seamless playback from T1_C1 to T1_C13. 1. Color Bar 100% is selectively displayed on Sub menu1 screen.
3) Selection of 2. Color Bar 75% ⟶ Return to Sub menu1 after seamless playback from T1_C2 to T1_C13. 1. Color Bar 100% is selectively displayed on Sub menu1 screen.
4) At the selection of 3 - 13, item 3 mentioned above is executed as the routine.
5) At the display of Sub menu1, Main Menu is selected ⟶ Jump to Main Menu. At the display of Main Menu, 1. Video Signal of 59.94Hz/1080i is selectively displayed.
6) Selection of LPCM Audio ⟶ Playback from T2_C1 to T19_C1. SubPic that corresponds to Audio stream 1 is forcibly displayed. During the playback, when audio channel changes, the caption that corresponds to each audio stream is forcibly displayed. Return to Sub menu1 after playback. 1. Color Bar 100% is selectively displayed on Sub menu1 screen.
7) Selection of Dolby AC-3 Audio ⟶ Playback of T20_C1. SubPic that corresponds to Audio stream 1 is forcibly displayed. During the playback, when audio channel changes, the caption that corresponds to each audio stream is forcibly displayed. Return to Sub menu1 after playback. 1. Color Bar 100% is selectively displayed on Sub menu1 screen.
8) Selection of Motion Picture ⟶ Return to Sub menu1 after playback of T21_C1. 1. Color Bar 100% is selectively displayed on Sub menu1 screen.
9) Selection of AV Sync ⟶ Return to Sub menu1 after playback of T67_C1. 1. Color Bar 100% is selectively displayed on Sub menu1 screen.
10) At the selection of Main Manu, 1. Video Signal of 1080/59.94i of Main Menu is selectively displayed.

2-2-5. BLX-204 Menu Function (5)
Sub menu 2

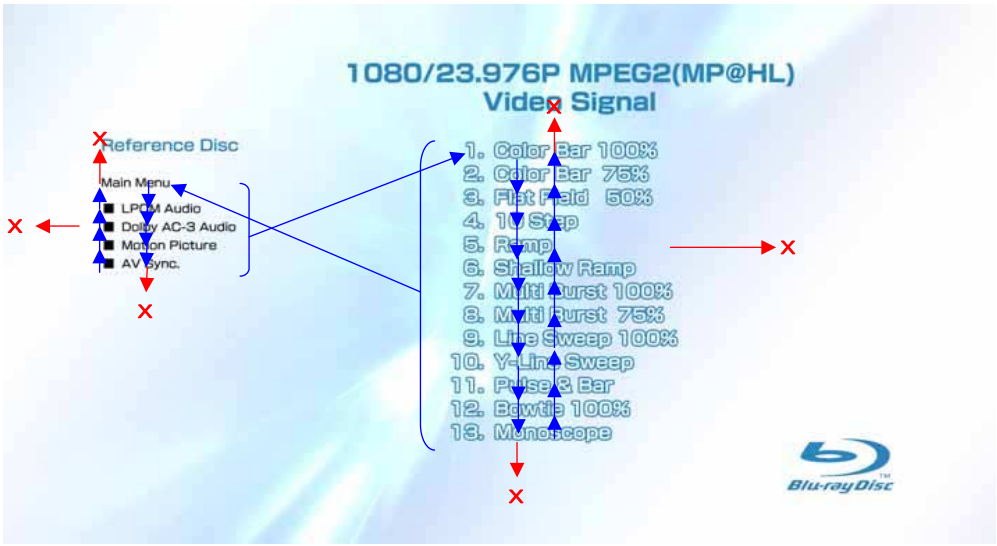

1) At the display of Sub menu2, 1. Color Bar 100% is selectively displayed.
2) Selection of 1. Color Bar 100% ⟶ Return to Sub menu2 after seamless playback from T43_C1 to T43_C13. 1. Color Bar 100% is selectively displayed on Sub menu2 screen.
3) Selection of 2. Color Bar 75% ⟶ Return to Sub menu2 after seamless playback from T43_C2 to T43_C13. 1. Color Bar 100% is selectively displayed on Sub menu2 screen.
4) At the selection of 3 - 13, item 3 mentioned above is executed as the routine.
5) At the display of Sub menu2, Main Menu is selected ⟶ Jump to Main Menu. At the display of Main Menu, 1. Video Signal of 23.976Hz/1080P is selectively displayed.
6) Selection of LPCM Audio ⟶ Playback from T44_C1 to T50_C1 and from T71_C1 to T81_C1. SubPic that corresponds to Audio stream 1 is forcibly displayed.
   During the playback, when audio channel changes, the caption that corresponds to each audio stream is forcibly displayed. Return to Sub menu2 after playback. 1. Color Bar 100% is selectively displayed on Sub menu2 screen.
7) Selection of Dolby AC-3 Audio ⟶ Playback of T51_C1. SubPic that corresponds to Audio stream 1 is forcibly displayed.
   During the playback, when audio channel changes, the caption that corresponds to each audio stream is forcibly displayed. Return to Sub menu2 after playback. 1. Color Bar 100% is selectively displayed on Sub menu2 screen.
8) Selection of Motion Picture ⟶ Return to Sub menu2 after playback of T52_C1 and T69. 1. Color Bar 100% is selectively displayed on Sub menu2 screen.
9) Selection of AV Sync ⟶ Return to Sub menu2 after playback of T70_C1. 1. Color Bar 100% is selectively displayed on Sub menu2 screen.
10) At the selection of Main Manu, 1. Video Signal of 1080/23.976P of Main Menu is selectively displayed.

2-2-6. BLX-204 Menu Function (6)
Sub menu 3

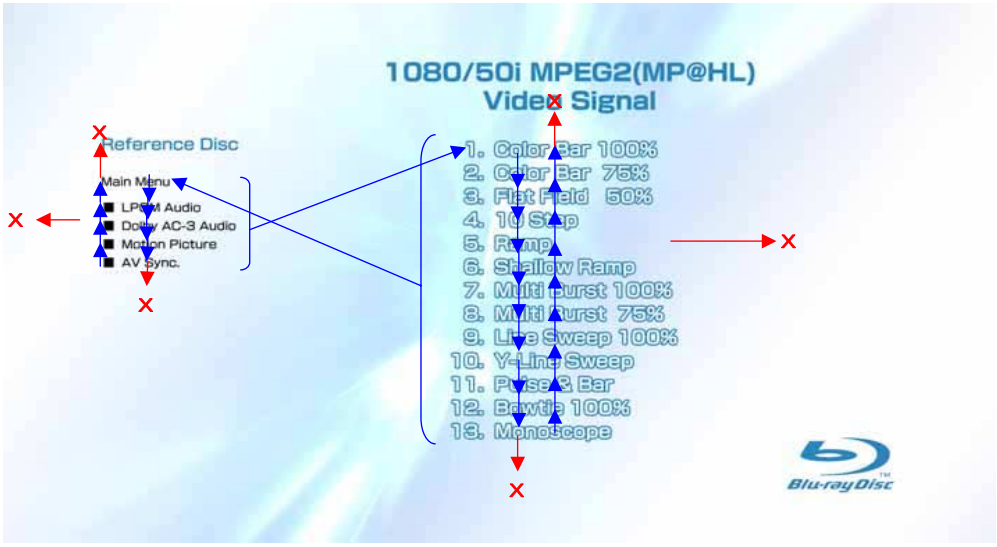

1) At the display of Sub menu3, 1. Color Bar 100% is selectively displayed.
2) Selection of 1. Color Bar 100% ⟶ Return to Sub menu3 after seamless playback from T53_C1 to T53_C13. 1. Color Bar 100% is selectively displayed on Sub menu3 screen.
3) Selection of 2. Color Bar 75% ⟶ Return to Sub menu3 after seamless playback from T53_C2 to T53_C13. 1. Color Bar 100% is selectively displayed on Sub menu3 screen.
4) At the selection of 3 - 13, item 3 mentioned above is executed as the routine.
5) At the display of Sub menu3, Main Menu is selected ⟶ Jump to Main Menu. At the display of Main Menu, 1. Video Signal of 50Hz/1080i is selectively displayed.
6) Selection of LPCM Audio ⟶ Playback from T54_C1 to T60_C1 and from T84_C1 to T94_C1. SubPic that corresponds to Audio stream 1 is forcibly displayed.
   During the playback, when audio channel changes, the caption that corresponds to each audio stream is forcibly displayed. Return to Sub menu3 after playback. 1. Color Bar 100% is selectively displayed on Sub menu3 screen.
7) Selection of Dolby AC-3 Audio ⟶ Playback of T61_C1. SubPic that corresponds to Audio stream 1 is forcibly displayed.
   During the playback, when audio channel changes, the caption that corresponds to each audio stream is forcibly displayed. Return to Sub menu3 after playback. 1. Color Bar 100% is selectively displayed on Sub menu3 screen.
8) Selection of Motion Picture ⟶ Return to Sub menu3 after playback of T62_C1⟶T82. 1. Color Bar 100% is selectively displayed on Sub menu3 screen.
9) Selection of AV Sync ⟶ Return to Sub menu3 after playback of T83_C1. 1. Color Bar 100% is selectively displayed on Sub menu3 screen.
10) At the selection of Main Manu, 1. Video Signal of 1080/50i of Main Menu is selectively displayed.

2-2-7. BLX-204 Menu Function (7)
Sub menu 4

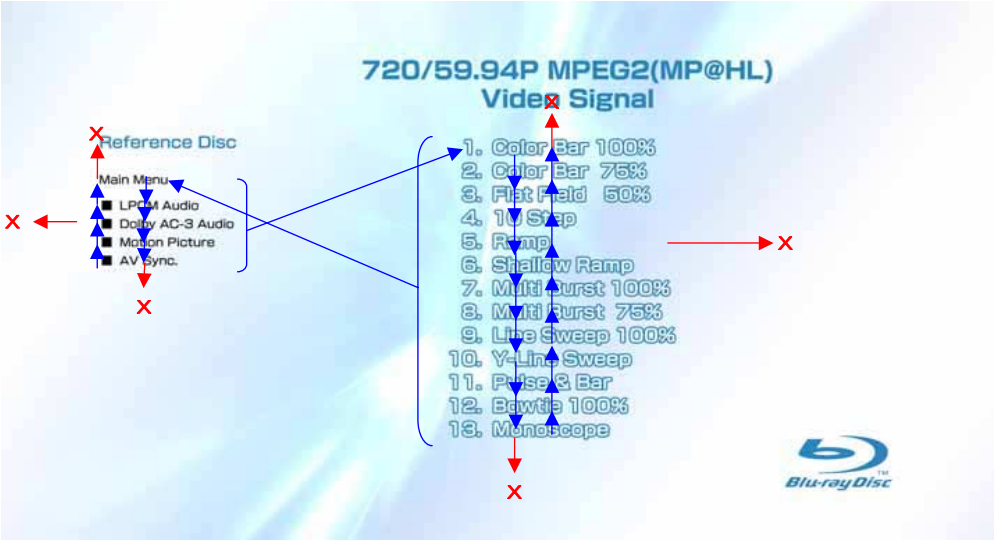

1) At the display of Sub menu4, 1. Color Bar 100% is selectively displayed.
2) Selection of 1. Color Bar 100% ⟶ Return to Sub menu4 after seamless playback from T22_C1 to T22_C13. 1. Color Bar 100% is selectively displayed on Sub menu4 screen.
3) Selection of 2. Color Bar 75% ⟶ Return to Sub menu4 after seamless playback from T22_C2 to T22_C13. 1. Color Bar 100% is selectively displayed on Sub menu4 screen.
4) At the selection of 3 - 13, item 3 mentioned above is executed as the routine.
5) At the display of Sub menu4, Main Menu is selected ⟶ Jump to Main Menu. At the display of Main Menu, 1. Video Signal of 59.94Hz/720P is selectively displayed.
6) Selection of LPCM Audio ⟶ Playback from T44_C1 to T50_C1. SubPic that corresponds to Audio stream 1 is forcibly displayed. During the playback, when audio channel changes, the caption that corresponds to each audio stream is forcibly displayed. Return to Sub menu4 after playback. 1. Color Bar 100% is selectively displayed on Sub menu4 screen.
7) Selection of Dolby AC-3 Audio ⟶ Playback of T51_C1. SubPic that corresponds to Audio stream 1 is forcibly displayed. During the playback, when audio channel changes, the caption that corresponds to each audio stream is forcibly displayed. Return to Sub menu4 after playback. 1. Color Bar 100% is selectively displayed on Sub menu4 screen.
8) Selection of Motion Picture ⟶ Return to Sub menu4 after playback of T52_C1. 1. Color Bar 100% is selectively displayed on Sub menu4 screen.
9) Selection of AV Sync ⟶ Return to Sub menu4 after playback of T68_C1. 1. Color Bar 100% is selectively displayed on Sub menu4 screen.
10) At the selection of Main Manu, 1. Video Signal of 720/59.94P of Main Menu is selectively displayed.

3. POSITION OF COUNTERMEASURE PARTS

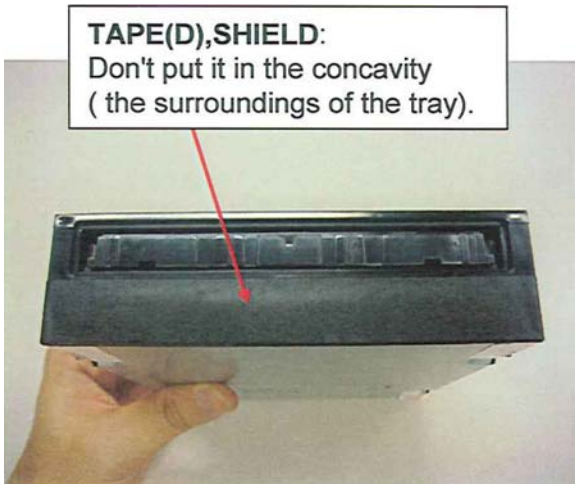

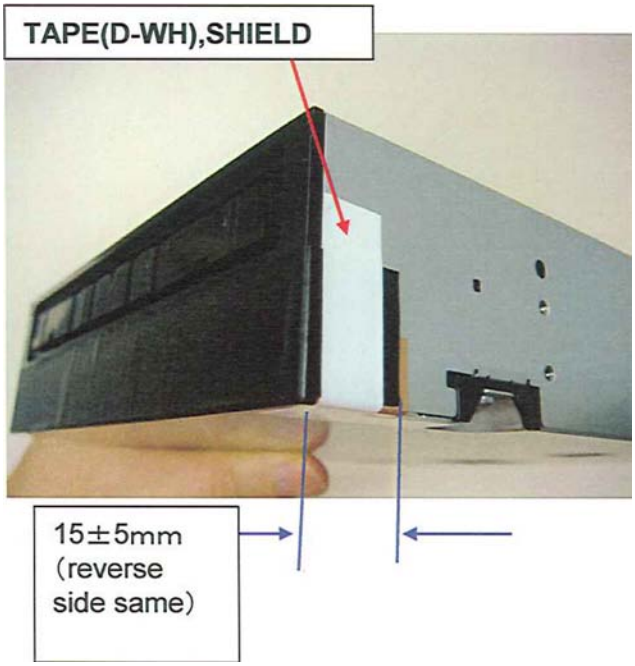

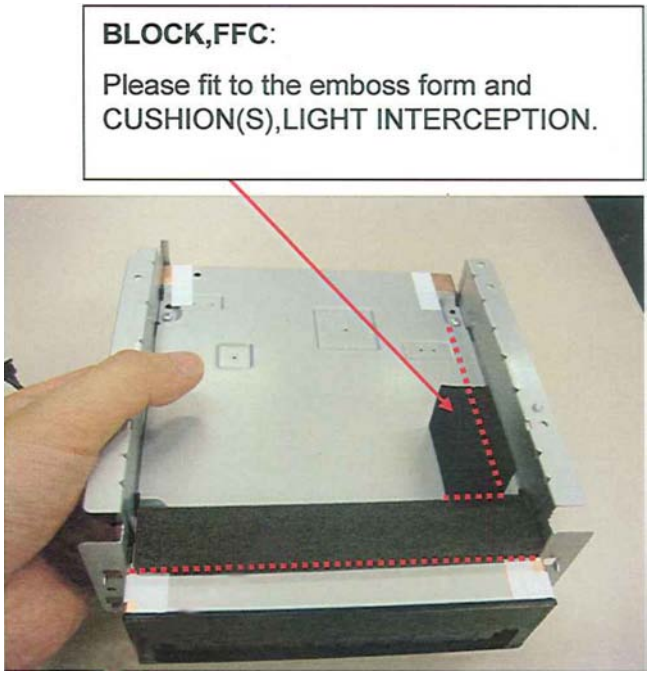

MEMO

SECTION 1
GENERAL

This section is extracted from instruction manual (3-270-909-11).

WARNING

To reduce the risk of fire or electric shock, do not expose this apparatus to rain or moisture.
To avoid electrical shock, do not open the cabinet. Refer servicing to qualified personnel only.

Batteries or batteries installed apparatus shall not be exposed to excessive heat such as sunshine, fire or the like.

CAUTION

The use of optical instruments with this product will increase eye hazard. As the laser beam used in this Blu-ray Disc player is harmful to eyes, do not attempt to disassemble the cabinet.
Refer servicing to qualified personnel only.

This label is located on the laser protective housing inside the enclosure.

This symbol is intended to alert the user to the presence of uninsulated "dangerous voltage" within the product's enclosure that may be of sufficient magnitude to constitute a risk of electric shock to persons.

This symbol is intended to alert the user to the presence of important operating and maintenance (servicing) instructions in the literature accompanying the appliance.

CAUTION

You are cautioned that any changes or modifications not expressly approved in this manual could void your authority to operate this equipment.

Note

This equipment has been tested and found to comply with the limits for a Class B digital device, pursuant to Part 15 of the FCC Rules. These limits are designed to provide reasonable protection against harmful interference in a residential installation. This equipment generates, uses, and can radiate radio frequency energy and, if not installed and used in accordance with the instructions, may cause harmful interference to radio communications. However, there is no guarantee that interference will not occur in a particular installation. If this equipment does cause harmful interference to radio or television reception, which can be determined by turning the equipment off and on, the user is encouraged to try to correct the interference by one or more of the following measures:
– Reorient or relocate the receiving antenna.
– Increase the separation between the equipment and receiver.
– Connect the equipment into an outlet on a circuit different from that to which the receiver is connected.
– Consult the dealer or an experienced radio/TV technician for help.

For customers in the U.S.A

If this product is not working properly, please call 1-800-222-7669.
Owner's Record
The model and serial numbers are located at the rear of the unit. Record the serial number in the space provided below. Refer to them whenever you call upon your Sony dealer regarding this product.

Model No. BDP-S500
Serial No._____

For Customers in Canada

If this product is not working properly, please call 1-877-602-2008 for **Peace of Mind Warranty Replacement service.**
For other product related questions please contact our **Customer Information Service Center** at 1-877-899-7669 or write to us at: Customer Information Service 115 Gordon Baker Road, Toronto, Ontario, M2H 3R6

Notes About the Discs

- To keep the disc clean, handle the disc by its edge. Do not touch the surface. Dust, fingerprints, or scratches on the disc may cause it to malfunction.

- Do not expose the disc to direct sunlight or heat sources such as hot air ducts, or leave it in a car parked in direct sunlight as the temperature may rise considerably inside the car.
- After playing, store the disc in its case.
- Clean the disc with a cleaning cloth. Wipe the disc from the center out.

- Do not use solvents such as benzine, thinner, commercially available disc/lens cleaners, or anti-static spray intended for vinyl LPs.
- If you have printed the disc's label, dry the label before playing.

Important Safety Instructions

1) Read these instructions.
2) Keep these instructions.
3) Heed all warnings.
4) Follow all instructions.
5) Do not use this apparatus near water.
6) Clean only with dry cloth.
7) Do not block any ventilation openings. Install in accordance with the manufacturer's instructions.
8) Do not install near any heat sources such as radiators, heat registers, stoves, or other apparatus (including amplifiers) that produce heat.
9) Do not defeat the safety purpose of the polarized or grounding-type plug. A polarized plug has two blades with one wider than the other. A grounding type plug has two blades and a third grounding prong. The wide blade or the third prong are provided for your safety. If the provided plug does not fit into your outlet, consult an electrician for replacement of the obsolete outlet.
10) Protect the power cord from being walked on or pinched particularly at plugs, convenience receptacles, and the point where they exit from the apparatus.
11) Only use attachments/accessories specified by the manufacturer.
12) Use only with the cart, stand, tripod, bracket, or table specified by the manufacturer, or sold with the apparatus. When a cart is used, use caution when moving the cart/ apparatus combination to avoid injury from tip-over.

13) Unplug this apparatus during lightning storms or when unused for long periods of time.
14) Refer all servicing to qualified service personnel. Servicing is required when the apparatus has been damaged in any way, such as power-supply cord or plug is damaged, liquid has been spilled or objects have fallen into the apparatus, the apparatus has been exposed to rain or moisture, does not operate normally, or has been dropped.

Precautions

On safety

- To prevent fire or shock hazard, do not place objects filled with liquids, such as vases, on the apparatus.
- Should any solid object or liquid fall into the cabinet, unplug the player and have it checked by qualified personnel before operating it any further.

On power sources

- The player is not disconnected from the AC power source as long as it is connected to the wall outlet, even if the player itself has been turned off.
- If you are not going to use the player for a long time, be sure to disconnect the player from the wall outlet. To disconnect the AC power cord, grasp the plug itself; never pull the cord.

On placement

- Place the player in a location with adequate ventilation to prevent heat build-up in the player.
- Do not place the player on a soft surface such as a rug that might block the ventilation holes.
- Do not place the player in a location near heat sources, or in a place subject to direct sunlight, excessive dust, or mechanical shock.
- Do not install the player in an inclined position. It is designed to be operated in a horizontal position only.
- Keep the player and the discs away from equipment with strong magnets, such as microwave ovens, or large loudspeakers.
- Do not place heavy objects on the player.
- Do not install this player in a confined space, such as a bookshelf or similar unit.
- Install this player so that the power cord can be unplugged from the wall socket immediately in the event of trouble.

On operation

- If the player is brought directly from a cold to a warm location, or is placed in a very damp room, moisture may condense on the lenses inside the player. Should this occur, the player may not operate properly. In this case, remove the disc and leave the player turned on for about half an hour until the moisture evaporates.
- When you move the player, take out any discs. If you don't, the disc may be damaged.
- Do not move the player with the sliding panel down.
- Do not apply a strong shock to the sliding panel.

On adjusting volume

Do not turn up the volume while listening to a section with very low level inputs or no audio signals. If you do, the speakers may be damaged when a peak level section is played.

On cleaning

Clean the cabinet, panel, and controls with a soft cloth slightly moistened with a mild detergent solution. Moreover, wipe the glass part on the front panel with a soft, dry cloth. Do not use any type of abrasive pad, scouring powder or solvent such as alcohol or benzine.

On cleaning discs, disc/lens cleaners

Do not use cleaning discs or disc/lens cleaners (including wet or spray types). These may cause the apparatus to malfunction.

On replacement of parts

In the events that this player is repaired, repaired parts may be collected for reuse or recycling purposes.

IMPORTANT NOTICE

Caution: This player is capable of holding a still video image or on-screen display image on your television screen indefinitely. If you leave the still video image or on-screen display image displayed on your TV for an extended period of time you risk permanent damage to your television screen. Plasma display panel televisions and projection televisions are susceptible to this.

About this manual

Instructions in this manual describe the controls on the remote. You can also use the controls on the player if they have the same or similar names as those on the remote.
The meanings of the icons used in this manual are described below:

Icon	Meaning
BD	Functions available for BD-ROMs and BD-REs/BD-Rs*1, including DL discs.
DVD	Functions available for DVD VIDEOs and DVD+RWs/DVD+Rs in +VR mode or DVD-RWs/DVD-Rs in video mode, including 8 cm discs.
DATA DVD	Functions available for DATA DVDs (DVD+RWs/DVD+Rs/DVD-RWs/DVD-Rs containing MPEG-2 PS movie files, MP3*2 audio tracks, and JPEG image files).
CD	Functions available for music CDs or CD-Rs/CD-RWs in music CD Format.

*1 BD-REs/BD-Rs in BDMV mode only.
*2 MP3 (MPEG-1 Audio Layer III) is a standard format defined by ISO (International Organization for Standardization)/IEC (International Electrotechnical Commission) MPEG which compresses audio data.

Note

The on-screen display illustrations used in this manual may not match the graphics displayed on your TV screen.

This Player Can Play the Following Discs and Files

Disc Format	
Blu-ray Disc	Blu-ray Disc
DVD VIDEO	DVD VIDEO
DVD-RW/-R	DVD RW, DVD 8/4.7
DVD+RW/+R	DVD+ReWritable, DVD+R, DVD+R DL
CD	COMPACT DIGITAL AUDIO

"Blu-ray Disc" is a trademark.
"Blu-ray Disc," "DVD+RW," "DVD-RW," "DVD+R," "DVD-R," "DVD VIDEO," and "CD" logos are trademarks.

Supported file formats (DATA DVD only)

DVD+RWs/DVD-RWs/DVD+Rs/DVD-Rs are called "DATA DVD" in this manual when the discs contain playable files. The following file formats are supported:
- MPEG-2 PS movie files.
- MP3 music files.
- JPEG* image files.

* JPEG format conforming to UDF (Universal Disk Format).

Notes about BD-ROM compatibility

This player supports BD-ROM Profile 1 only. Playback of later versions and BDs other than BD-ROM is not guaranteed. Since the Blu-ray Disc specifications are new and evolving, some discs may not play depending on the disc type and the version.
The audio output differs depending on the source, connected output jack, and selected audio settings. For details, see *page 48*.

Examples of discs that the player cannot play

The player cannot play the following discs:
- BDs with cartridge.
- DVD-RWs/DVD-Rs of VR mode.
- DVD-RAMs.
- HD DVDs.
- DVD Audio discs.
- DATA CDs (CD-Rs/CD-RWs other than music CD format).
- CD-ROMs recorded in PHOTO CD format.
- Data part of CD-Extras.
- VCDs/Super VCDs.
- HD layer on Super Audio CDs.

Also, the player cannot play the following discs:
- A BD-ROM/DVD VIDEO with a different region code.
- A disc recorded in a color system other than NTSC, such as PAL (this player conforms to the NTSC color system).
- A disc that has a non-standard shape (e.g., card, heart).
- A disc with paper or stickers on it.
- A disc that has the adhesive of cellophane tape or a sticker still left on it.

Notes

- **Notes about BD-REs/BD-Rs, DVD+RWs/DVD+Rs, DVD-RWs/ DVD-Rs, or CD-Rs/CD-RWs**
  Some BD-REs/BD-Rs, DVD+RWs/DVD+Rs, DVD-RWs/ DVD-Rs, or CD-Rs/CD-RWs cannot be played on this player due to the recording quality or physical condition of the disc, or the characteristics of the recording device and authoring software.
  The DVD disc will not play if it has not been correctly finalized. For more information, refer to the operating instructions for the recording device. Note that some playback functions may not work with some DVD+RWs/DVD+Rs, even if they have been correctly finalized. In this case, view the disc by normal playback.
- **Music discs encoded with copyright protection technologies**
  This product is designed to playback discs that conform to the Compact Disc (CD) standard. Recently, various music discs encoded with copyright protection technologies are being marketed by some record companies. Please be aware that among those discs, there are some that do not conform to the CD standard and may not be playable by this product.
- **Note on DualDiscs**
  A DualDisc is a two sided disc product which mates DVD recorded material on one side with digital audio material on the other side.
  However, since the audio material side does not conform to the Compact Disc (CD) standard, playback on this product is not guaranteed.
- **Note about double-layer DVDs**
  The playback pictures and sound may be momentarily interrupted when the layers switch.
- **Note about 8 cm BD-REs/8 cm BD-Rs**
  Some 8 cm BD-REs/8 cm BD-Rs cannot be played on this player.

About playback of discs recorded in AVCHD format

This player can play AVCHD format discs.

AVCHD™

What is the AVCHD format?

The AVCHD format is a high definition digital video camera format used to record SD (standard definition) or HD (high definition) signals of either the 1080i specification*1 or the 720p specification*2 on DVDs, using efficient data compression coding technology. The MPEG-4 AVC/H.264 format is adopted to compress video data, and the Dolby Digital or Linear PCM system is used to compress audio data. The MPEG-4 AVC/ H.264 format is capable of compressing images at higher efficiency than that of the conventional image compressing format. The MPEG-4 AVC/H.264 format enables a high definition (HD) video signal shot on a digital video camera recorder to be recorded on DVD discs, in the same way as it would be for a standard definition (SD) television signal.

"AVCHD" and the AVCHD logo are trademarks of Matsushita Electric Industrial Co., Ltd. and Sony Corporation.

*1 A high definition specification which utilizes 1080 effective scanning lines and the interlace system.
*2 A high definition specification which utilizes 720 effective scanning lines and the progressive system.

Notes

- Some AVCHD format discs may not play, depending on the recording condition.
- The AVCHD format disc will not play if it has not been correctly finalized.

→continued

BD/DVD region code

Your player has a region code printed on the back of the unit and only will play BD-ROM/DVD VIDEOs (playback only) labeled with identical region codes. This system is used to protect copyrights.

DVD VIDEOs labeled (ALL) will also play on this player.

Depending on the BD-ROM/DVD VIDEO, there may be no region code indication, even though playing the BD-ROM/DVD VIDEO is prohibited by area restrictions.

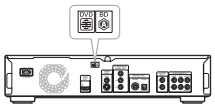

Note on playback operations of BDs/DVDs

Some playback operations of BDs/DVDs may be intentionally set by software producers. Since this player plays BDs/DVDs according to the disc contents the software producers designed, some playback features may not be available. Also, refer to the instructions supplied with the BDs/DVDs.

Copyrights

This product incorporates copyright protection technology that is protected by U.S. patents and other intellectual property rights. Use of this copyright protection technology must be authorized by Macrovision, and is intended for home and other limited viewing uses only unless otherwise authorized by Macrovision. Reverse engineering or disassembly is prohibited.

Main Features

Experience the high definition (HD) quality audio/video output and the library function of this Blu-ray Disc Player.

BD-ROM playback

BD-ROM is a next generation optical disc format in the HD era. Featuring massive storage capacity of 25 to 50 GB (five times larger than a DVD) and a high-speed transfer rate of up to 54 Mbps, the format offers not only uncompromised HD quality video*1*2, but also enables rich bonus content on a single disc and HD quality audio up to 8ch, and interactive operability.

*1 A compatible HD display device is necessary to enjoy the same quality.

*2 Some discs allow viewing only with an HDMI connection.

24p True Cinema

Movies shot with a film camera consist of 24 frames per second. Since conventional televisions (both CRT and flat panels) display frames either at 1/60 or 1/50 second intervals, the 24 frames do not appear at an even pace.
When connected to a TV with 24p capabilities, the player displays each frame at 1/24 second intervals — the same interval originally shot with the film camera, thus faithfully reproducing the original cinema image.

HDMI Control ('BRAVIA' Theatre Sync)

'BRAVIA' Theatre Sync Function makes operations simple by connecting Sony components that are compatible with the HDMI Control function with an HDMI cord.

BD-J application

The BD-ROM format supports Java for interactive functions. "BD-J" offers content providers almost unlimited functionality when creating interactive BD-ROM titles*.

Java and all Java-based trademarks and logos are trademarks or registered trademarks of Sun Microsystems, Inc. in the U.S. and other countries.
Esmertec and Jbed are trademarks or registered trademarks of Esmertec AG.
© 2000-2007 Esmertec AG

* This player does not support downloadable BD-J content.

Support of uncompressed multi-channel Linear PCM

In combination with a compatible AV amplifier, the player can output up to 8ch Linear PCM surround sound*. With a non-compatible amplifier, the player can output 5.1ch analog signals from its 5.1CH OUTPUT jack for high quality audio enjoyment.

* Note that the DIGITAL OUT (COAXIAL or OPTICAL) jack does not output 8ch signals. You will need an HDMI cord and an HDMI-compatible device that support 8ch signals.

Support of "Dolby TrueHD" and "DTS-HD" — 7.1 Channel Surround Sound

The player supports the bitstream output functionality of Dolby TrueHD, Dolby Digital Plus, and DTS-HD High Resolution Audio bitstream via HDMI. It also supports the decoding functionality of Dolby TrueHD and Dolby Digital Plus to Linear PCM via HDMI.

➡continued

AVCHD format disc playback

The player supports AVCHD format files–high definition recordings made on AVCHD-compatible camcorders. Your high definition personal archive is readily playable in HD quality.

HDMI (High-Definition Multimedia Interface) digital interface

When connected to an HDMI-equipped display device using a single HDMI cord, the player can output both SD to HD video and multi-channel audio signals, in digital form without degradation.
The HDMI specification supports HDCP (High-bandwidth Digital Content Protection), a copy protection technology that incorporates coding technology for digital video signals.

Library function for recorded files (For JPEG image, MP3 audio, MPEG-2 PS movie files only)

With DATA DVDs created on other DVD devices, three separate movie/music/photo Title List-browsers allow for easy sorting, searching and playback including a slideshow.

x.v.Color compatibility

This player supports playback of video contents on discs recorded with "x.v.Color" technology. To watch this video content with the "x.v.Color" space, a TV or other display device supporting both video image reproduction using "x.v.Color" standard and capability of manual switching of its color space setting is required. Please consult your owner's manual of your display device for further information.

◆About x.v.Color

– x.v.Color is a more familiar term for the xvYCC standard proposed by Sony, and is a trademark of Sony Corporation.
– xvYCC is an international standard for color space in video. This standard can express a wider color range than the currently used broadcast standard.

Getting Started

Follow steps 1 to 7 to hook up and adjust the settings of the player.
For jack and button names, see "*Index to Parts and Controls*" *(page 58)*.

Notes

- Plug cords securely to prevent unwanted noise.
- Refer to the instructions supplied with the components to be connected.
- You cannot connect this player to a TV that does not have a video input jack.
- Be sure to disconnect the power cord of each component before connecting.
- Do not apply too much pressure on the connecting cords. Pushing against the cabinet wall, etc., may damage the cord.

- *Step 1: Unpacking* *9*
- *Step 2: Connecting the Video Cords/ HDMI Cord* *10*
- *Step 3: Connecting the Audio Cords* *12*
- *Step 4: Connecting the Power Cord* *16*
- *Step 5: Preparing the Remote* *16*
- *Step 6: Easy Setup* *18*
- *Step 7: Additional Adjustments* *19*

Step 1: Unpacking

Check that you have the following items:
- Video cord (phono plug × 1) (1)
- Stereo audio cord (phono plug × 2) (1)
- Power cord (1)
- Remote commander (remote) (1)
- Size AA (R6) batteries (2)

Step 2: Connecting the Video Cords/HDMI Cord

Connect this player to your TV monitor, projector or AV amplifier (receiver) using a video cord. Select one of the patterns Ⓐ through Ⓓ, according to the input jack on your TV monitor, projector or AV amplifier (receiver).
In order to view 1080p progressive signals with a compatible TV, projector, or monitor with an HDMI input jack, you must select pattern Ⓓ. You can use pattern Ⓒ to view 480p/720p progressive signals or 1080i interlace signals on a compatible device with component video input jacks.

Ⓐ Connecting to a video input jack

Connect the supplied video cord (yellow) to the yellow (video) jack. You will enjoy standard quality images.

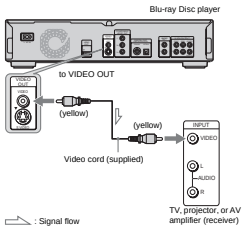

When connecting to a standard 4:3 screen TV

Depending on the disc, the image may not fit your TV screen. To change the aspect ratio, see *page 45*.

Note

Do not connect a VCR, etc., between your TV and the player. If you pass the player signals via the VCR, you may not receive a clear image on the TV screen. If your TV has only one audio/video input jack, connect the player to this jack.

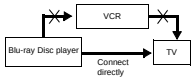

Ⓑ Connecting to an S VIDEO input jack

Connect using an S VIDEO cord (not supplied). You will enjoy high quality images.

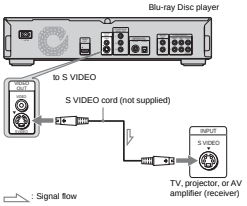

Ⓒ Connecting to component video input jacks (Y, PB, PR)

Connect the component via the COMPONENT VIDEO OUT jacks using a component video cord (not supplied) or three video cords (not supplied) of the same kind and length. You will enjoy accurate color reproduction and high quality images. You can also enjoy higher quality pictures from 480p/720p progressive signals or 1080i interlace signals, if your TV, projector or AV amplifier (receiver) is compatible.

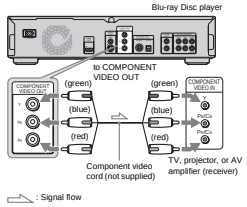

Ⓓ Connecting to an HDMI input jack

Use a certified Sony HDMI cord (not supplied) to enjoy high quality digital pictures and sound through the HDMI OUT jack. You will enjoy higher quality pictures from 480p/1080i, or 1080p (highest among the player output), if your TV, projector or AV amplifier (receiver) is compatible.

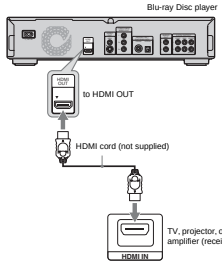

This Blu-ray Disc player incorporates High-Definition Multimedia Interface (HDMI™) technology. HDMI, the HDMI logo and High-Definition Multimedia Interface are trademarks or registered trademarks of HDMI Licensing LLC.

Notes on connecting to the HDMI OUT jack

Observe the following as improper handling may damage the HDMI OUT jack and the connector.

- Carefully align the HDMI OUT jack on the back of the player and the HDMI connector by checking their shapes. Make sure the connector is not upside down or tilted.

- Be sure to disconnect the HDMI cord when moving the player.

- If you place the player on the cabinet with the HDMI cord connected, do not apply too much pressure to the cabinet wall. It may damage the HDMI OUT jack or the HDMI cord.
- When connecting or disconnecting, do not screw in or rotate the HDMI connector.

About indicators for HDMI connection

After the player is turned on, the HD indicator on the front panel lights up when outputting 720p/1080i/1080p video signals. The HDMI indicator lights up when an HDMI device is connected.

Notes

- Consumers should note that not all high definition television sets are fully compatible with this product and may cause artifacts to be displayed in the picture. In the case of 480p/720p/1080i/1080p scan picture problems, it is recommended that the user switch the connection to the 'standard definition' output. If there are questions regarding our TV set compatibility with this model 480p/720p/1080i/1080p Blu-ray Disc player, please contact our customer service center.
- If the picture is not clear, not natural or not to your satisfaction, change the video output resolution by pressing VIDEO FORMAT *(page 46)*.
- Be sure to use only an HDMI cord that bears the HDMI logo.

About the 'BRAVIA' Theatre Sync features (for HDMI connections only)

By connecting Sony components that are compatible with the HDMI Control function with an HDMI cord (not supplied), operation is simplified as below:

- One-Touch Play *(page 21)*
  You can turn on the player and TV/AV receiver, set the TV/AV receiver's input to the player, and start playback with one touch of the ⊳ button.
- System Power-Off
  When you turn the TV off by using the POWER button on the TV's remote, the HDMI compatible components turn off automatically.

To prepare for the 'BRAVIA' Theatre Sync features

Set "HDMI Control" of "Options" setup to "On" *(page 52)*.

Note

Depending on the connected component, the HDMI Control function may not work. Refer to the operating instructions supplied with the component.

Step 3: Connecting the Audio Cords

Select the connection that best suits your system. Be sure to read the instructions for the components you wish to connect.

Connection	Your setup
A **TV**	
B **Stereo amplifier (receiver) and two speakers**	
C **AV amplifier (receiver) having a Dolby*1 Surround (Pro Logic) decoder and 3 to 6 speakers** • Surround effects: Dolby Surround (Pro Logic)	
D-1 **AV amplifier (receiver) with 5.1ch input jacks and 6 speakers** • Surround effects: Dolby Digital (5.1ch), DTS (5.1ch)	
D-2 **AV amplifier (receiver) with a digital input jack having a Dolby Digital or DTS*2 decoder and 6 speakers** • Surround effects: Dolby Digital (5.1ch), DTS (5.1ch)	
D-3 **AV amplifier (receiver) with an HDMI input jack having a Dolby Digital Plus, Dolby TrueHD, or DTS-HD High Resolution Audio decoder, and 8 speakers** • Surround effects: Linear PCM (7.1ch), Dolby Digital Plus, Dolby TrueHD, DTS-HD High Resolution Audio bitstream	

*1 Manufactured under license from Dolby laboratories.
Dolby, Pro Logic, and the double-D symbol are trademarks of Dolby Laboratories.

*2 Manufactured under license under U.S. Patent #: 5,451,942 & other U.S. and worldwide patents issued & pending. DTS is a registered trademark and the DTS logos, Symbol, DTS-HD and DTS-HD Digital Out are trademarks of DTS, Inc. © 1996-2007 DTS, Inc. All Rights Reserved.

Notes about the HDMI OUT jack

- When you connect the player to an AV amplifier (receiver) using an HDMI cord, you will need to do one of the following:
  – Connect the AV amplifier (receiver) to a TV with the HDMI cord.
  – Connect the player to the TV with a video cord other than an HDMI cord (component video cord, S VIDEO cord, or video cord).
- When connecting to the HDMI OUT jack, carefully align the HDMI connector with the jack. Do not bend or apply pressure to the HDMI cord.
- If you change the component connected to the HDMI OUT jack, change "Audio (HDMI)" in "Audio Setup" to match the new component *(page 47)*. The player stores the HDMI related settings for up to five components.
- The HDMI connection is compatible with 2ch Linear PCM signals (48 to 192 kHz, 16/20/24 bit), and 6 to 8ch Linear PCM signals (48 to 96 kHz, 16/20/24 bit), in addition to Dolby Digital, Dolby Digital Plus, Dolby TrueHD, DTS (include DTS-ES, DTS96/24) and DTS-HD High Resolution Audio bitstream.

Note

If you connect a component that does not conform to the selected audio signal, a loud noise (or no sound) will come out from the speakers, which could damage your ears or speakers.

Ⓐ Connecting to your TV

This connection will use your TV's speakers for sound.

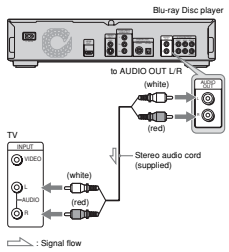

Ⓑ Connecting to a stereo amplifier (receiver) and 2 speakers

If your stereo amplifier (receiver) only has audio input jacks L and R, use **B-1**. If your amplifier (receiver) has a digital input jack, use **B-2**.

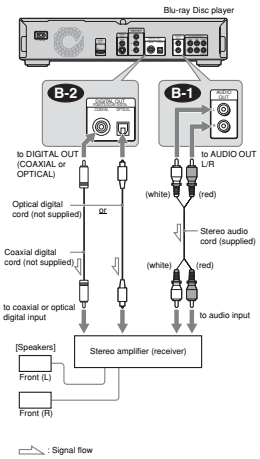

Ⓒ Connecting to an AV amplifier (receiver) having a Dolby Surround (Pro Logic) decoder and 3 to 6 speakers

If your AV amplifier (receiver) only has L and R audio input jacks, use **C-1**. If your amplifier (receiver) has a digital input jack, use **C-2**.

You can enjoy surround effects only when playing Dolby Surround audio or multi-channel audio (Dolby Digital or DTS) discs.

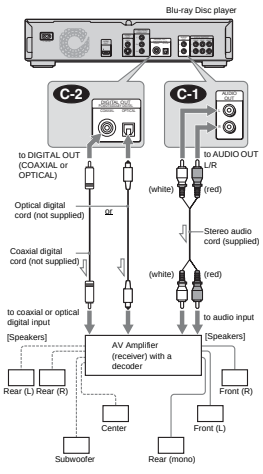

Hint

For correct speaker location, see the operating instructions of the connected components.

Note

When connecting 6 speakers, you do not need the "Rear (mono)" speaker above.

Ⓓ-1 Connecting to an AV amplifier (receiver) with 5.1ch input jacks and 6 speakers

If your AV amplifier (receiver) has 5.1 channel inputs, use **D-1**.

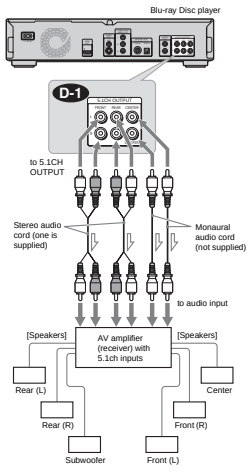

Hint

For correct speaker location, see the operating instructions of the connected components.

➡continued

D-2 Connecting to an AV amplifier (receiver) with a digital input jack and 6 speakers

If you want to use the Dolby Digital, or DTS decoder function on your AV amplifier (receiver), connect to its digital jack using D-2. You can enjoy a more realistic audio presence.

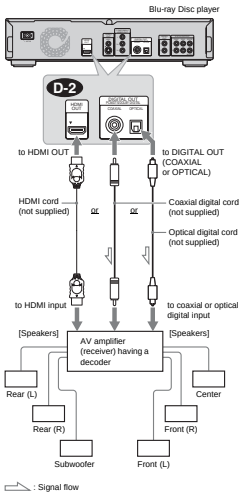

Hint

For correct speaker location, see the operating instructions of the connected components.

D-3 Connecting to an AV amplifier (receiver) with an HDMI input jack and 8 speakers

If your AV amplifier (receiver) accepts 8ch Linear PCM input with an HDMI connection, you can enjoy the surround sound using D-3.

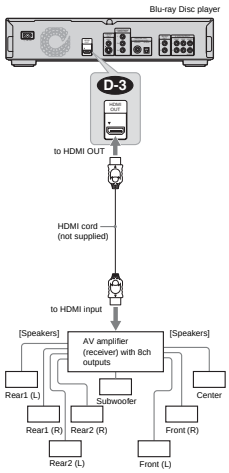

Hint

For correct speaker location, see the operating instructions of the connected components.

Note

Not all HDMI-compatible AV amplifiers (receivers) accept 8ch Linear PCM signals. See also the operating instructions supplied with the connected AV amplifier (receiver).

Step 4: Connecting the Power Cord

After all of the other connections are complete, connect the supplied power cord to the AC IN terminal of the player. Then plug the player and TV power cords into the AC outlet.

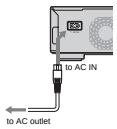

Step 5: Preparing the Remote

You can control the player using the supplied remote. Insert two Size AA (R6) batteries by matching the ⊕ and ⊖ ends on the batteries to the markings inside the battery compartment. When using the remote, point it at the remote sensor on the player *(page 58)*.

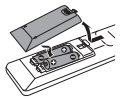

Notes

- Do not leave the remote in an extremely hot or humid place.
- Do not drop any foreign object into the remote casing, particularly when replacing the batteries.
- Do not expose the remote sensor to direct sunlight or a lighting apparatus. Doing so may cause a malfunction.
- If you do not use the remote for an extended period of time, remove the batteries to avoid possible damage from battery leakage and corrosion.

If you want to control your TV with the supplied remote

You can control the volume, input source, and power switch of your Sony TV with the supplied remote.

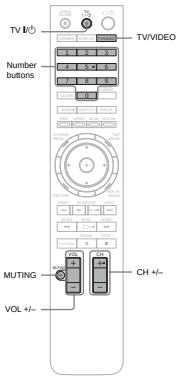

By pressing	You can
TV I/⏻	Turn the TV on or off.
VOL +/–	Adjust the volume of the TV.
TV/VIDEO	Switch the TV's input source between the TV and other input sources.
CH +/–	Select the channel up and down.
MUTING	Mute the sound (for Sony TV only).

To control other TVs with the remote

You can control the volume, input source, and power switch of non-Sony TVs as well.
If your TV is listed in the table below, set the appropriate manufacturer's code.

1 While holding down TV I/⏻, press the number buttons to select your TV manufacturer's code (see the table below).

2 Release TV I/⏻.

◆Code numbers of controllable TVs

If more than one code number is listed, try entering them one at a time until you find the one that works with your TV.

Manufacturer	Code number
Sony	01 (default)
Daewoo	22, 04
Emerson	14
GE	06
Hitachi	02, 04
JVC	09
LG/Gold star	03, 17, 04
MGA/Mitsubishi	13, 04
NEC	04, 12
Panasonic	19
Philips	08, 21
Pioneer	16
RCA	10, 04
R.Shack	05
Samsung	04, 12, 20
Sanyo	11
Sharp	05, 18
Toshiba	07, 18
Zenith	15

◆To return the remote to its default settings

1 Remove the batteries from the remote.

2 Re-insert the batteries while pressing down 1, 2, and 3 of the number buttons.

3 Wait for a few seconds.

Note

Depending on the connected unit, you may not be able to control your TV using all or some of the buttons on the supplied remote.

Step 6: Easy Setup

Follow the steps below to make the minimum number of basic adjustments for using the player. If you do not complete Easy Setup, it will appear each time you turn on your player. Make the settings below in the following order.

When turned on for the first time

Wait about 90 seconds before the player turns on and starts Easy Setup. The start-up time will be much shorter once Easy Setup is completed.

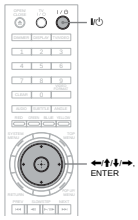

1 Turn on the TV.

2 Press I/⏻ to turn on the player.
The player turns on after a moment.

3 Switch the input selector on your TV so that the signal from the player appears on your TV screen.
If the display for OSD language selection does not appear, select "Start" of "Easy Setup" in "Options" Setup *(page 52)*.

4 Select the OSD language you want to display, and press ENTER.

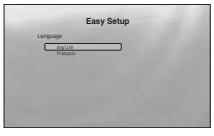

This will determine the Audio, Subtitle and BD/DVD menu languages as well.

5 Select "Start," and press ENTER to start "Easy Setup."

◆If the above display does not appear

Go to step 6. This display appears only when the player is turned on for the first time.

6 Select the video output format for the connected TV, and press ENTER.
For details about the video output, see *page 46*.

◆ When using the HDMI OUT jack

Select from "Auto," "480i," "480p," "720p," "1080i," "1080p," or "Source Direct," then go to step 8. "TV Type" in step 7 will be set to "16:9" (wide screen).

◆ When using the jacks other than the HDMI OUT jack

Select from "S-Video/Video only," "480i," "480p," "720p," "1080i" or "Don't Know." If you select "720p" or "1080i," go to step 8. "TV Type" in step 7 will be set to "16:9" (wide screen).

7 Select the aspect ratio that matches your TV, and press ENTER.

◆ **If you have a wide screen TV or a 4:3 standard TV with a wide screen mode**
Select "16:9" *(page 45)*.

◆ **If you have a 4:3 standard TV**
Select "4:3" *(page 45)*.

8 Select "Finish Setup," and press ENTER.

Hints
- If you want to reset these settings to their factory defaults, see *"Resetting the Player" (page 53)*.
- You can re-run "Easy Setup" from "Options" Setup *(page 52)*.

Step 7: Additional Adjustments

The following settings and adjustments are necessary when your connection applies.

For video connection

◆**When using the COMPONENT VIDEO OUT jacks**
(Pattern Ⓒ *–page 10*)
- Select the video output resolution for your TV by pressing VIDEO FORMAT *(page 46)*.

◆**When using the HDMI OUT jack**
(Pattern Ⓑ *–page 11*)
- Select the video output resolution for your TV by pressing VIDEO FORMAT *(page 46)*.
- Select the type of video output from the HDMI OUT jack in "YCbCr/RGBPC (HDMI)" of "Video Setup" *(page 45)*.

For audio connection

◆**When using the DIGITAL OUT (OPTICAL or COAXIAL) jack**
(Connection D-2, C-2, O-2 *–page 13* to *15*)
- Set "Dolby Digital" and "DTS" in "Audio Setup" *(page 47)* according to your AV amplifier's (receiver's) decoder.

◆**When using the HDMI OUT jack**
(HDMI connection of D-2, H-3 *–page 15*)
- Set "Dolby Digital" and "DTS" in "Audio Setup" *(page 47)* according to your AV amplifier's (receiver's) decoder.
- Select the audio output method from the HDMI OUT jack in "Audio (HDMI)" of "Audio Setup" *(page 47)*.

◆**When using the AUDIO OUT (L/R) jacks**
(Connection A-1 *–page 14*)
- Set "DTS Downmix" to "Lt/Rt" in "Audio Setup" *(page 47)*.

◆**When using the 5.1CH OUTPUT jacks**
(Connection H-3 *–page 14*)
- Set "Audio Output Mode" to "5.1 Channel" in "Speakers" Setup *(page 51)*, and adjust the "Speaker Setup" setting for your system.

Notes
- If you connect a component that does not conform to the selected audio signal, a loud noise (or no sound) will come out from the speakers, which could damage your ears or speakers.
- If you connect using the HDMI OUT jack or COMPONENT VIDEO OUT jacks and the picture does not appear clearly, the connected display device may not be compatible with the progressive signals. In this case, connect the display device to the S VIDEO jack or the VIDEO jack (pattern Ⓐ or Ⓑ – see *page 10*), re-run the "Easy Setup" from the "Options" Setup *(page 52)*, and select "S-Video/Video only" in step 6 *(page 18)*. Also, check the above items again to see if any additional adjustment is required.

Basic Operations

Most of the BD playback operations are common to DVD. This section covers BD/DVD/CD playback in general, together with the basic operation of the player.
For browsing recorded files on DATA DVDs*, a separate library function is available. See also *page 32* for movie, *36* for music, *40* for photo files.
For operations using the remote, a complete list is located on *page 24*.

* DVD+RWs/DVD+Rs/DVD-RWs/DVD-Rs containing MPEG-2 PS movie, MP3 audio, or JPEG image files.

- *Playing a Disc* 20
- *Guide to Displays* 22
- *Guide to the Remote* 24
- *Checking the Disc Information* 26
- *Clarifying Low Volume Sounds (Audio DRC)* . 27
- *Adjusting the Pictures* 28
- *Locking a Disc* 29

Playing a Disc

BD DVD CD

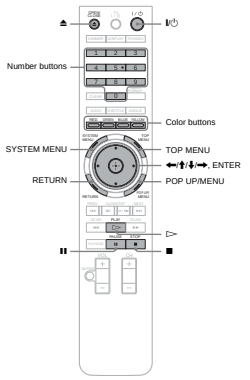

1 Press I/⏻.
The player turns on after a moment.

2 Switch the input selector on your TV so that the signal from the player appears on your TV screen.

3 Press ⏏ to open the disc tray.
The sliding panel shifts down and the disc tray opens. To open the sliding panel, press UP/DOWN on the player.

4 Place a disc on the disc tray with the playback side facing down.

Playback side facing down

5 Press ⏏ to close the disc tray.
Wait a short while until the disc type appears on the front panel display.

6 Press ▷ to start playback.
For more information about the remote's operations, see *page 24*.

Buttons	Details
II	Pauses playback, or restarts playback from the same point.
■	Stops playback, or cancels the resume point when pressed twice.
▷	Starts or restarts playback from the previous stop point.

7 When you finish playing, press ⏏ to open the disc tray.

8 Remove the disc, and press ⏏ again to close the disc tray.

9 Press I/⏻ to turn off the player.

To use the BD's or DVD's menu

When you play a BD-ROM, DVD VIDEO, or a finalized DVD+RW, DVD-RW (Video mode), DVD+R, or DVD-R (Video mode), you can display the disc's menu by pressing TOP MENU or POP UP/MENU. Some BDs/DVDs display the menu automatically. Either cases, navigate through the menu using ←/↑/↓/→, ENTER, or the number buttons and the color buttons as indicated by the disc's on-screen instructions. The BD menu is operable without interrupting playback.

To play restricted BDs

Change the "BD Parental Control" setting *(page 30)*.

To play restricted DVDs

For a restricted DVD, the display asks for the password. For "DVD Parental Control" setting, see *page 30*.

1 Enter your four-digit password using the number buttons.

2 Press ENTER to confirm.
To register or change the password, see *page 29*.

Notes about Resume Play

- Playback starts from the beginning if the title has not been played or the previous stop point is canceled.
- The stop point is canceled when:
  – you change the settings on the player.
  – you turn off the player (BD-ROM and DATA DVD only).
  – you press ■ twice.
  – you open the disc tray.
  – you use a search function.
- The player remembers the stop point for one title/track/file only. On a music CD, playback resumes from the beginning of the track.
- Depending on the disc, the Resume function may not work.

About the screen saver function

To prevent damage to your display device (ghosting), a screen saver image appears when the player is left unattended, has no disc inserted, or no title/slideshow is displayed for 15 minutes. To cancel, press any button on the remote or the player.

About One-Touch Play (for 'BRAVIA' Theatre Sync only)

With one touch of the ▷ button, the player and your TV/AV receiver automatically turn on and the TV/AV receiver's input is switched to the player. Playback starts automatically. To use this function, set "HDMI Control" of "Options" setup to "On" *(page 52)*.
The TV/AV receiver's input will also switch to the player automatically, in the following cases:
– You press ▷, SYSTEM MENU, TOP MENU, or POP UP/MENU buttons on the remote.
– A disc with auto playback function is loaded.

Guide to Displays

BD DVD DATA DVD CD

When 'Select an item, and press ENTER' appears in this manual, press the ←/↑/↓/→ keys on the remote to select the item then the entry button in the middle. You can operate the player likewise using displays.

1 Press SYSTEM MENU to turn on the above "System Menu."
The player's start menu appears, with entries to all of the functions.

2 Select an item, and press ENTER.
Each item leads to the following function displays. See the pages in parentheses for operations. When you want to return to the previous display, press RETURN.

Title List

For DATA DVDs, this display leads further to the Title Lists of content type. The three Title Lists appear similar and are operable in a similar way.

Select the Title List you want to view; from "Movies," "Photos," or "Music," and press ENTER.

◆**Movies**
Displays movies/video titles only *(page 32)*.

◆**Photos**
Displays image files only *(page 40)*.

◆**Music**
Displays music files only *(page 36)*.

A/V Control *(page 27)*

Adjusts the audio/video settings. Select either "Video Control," or "Audio Control," and press ENTER.

Setup *(page 44)*

Enters the Setup displays for changing the player's settings. Select the related Setup display, and press ENTER.

Entering characters

DATA DVD

When an on-screen keyboard appears (e.g., when searching for a title), enter the characters as follows.

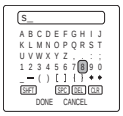

1 Select the character you want to enter, and press ENTER.
The character appears in the entry field. If necessary, select the following items, and press ENTER.

Items	Details
SHFT	Switches between upper and lower case characters. Select this before entering the character.
SPC	Inserts a space.
DEL	Deletes the last character input.
CLR	Clears all input characters.

2 Repeat step 1 to complete the entry.

3 Select "DONE," and press ENTER to close the on-screen keyboard.

Note
You cannot use the extended character set.

Guide to the Remote

The following covers all of the remote's functions. Refer to the list when necessary.

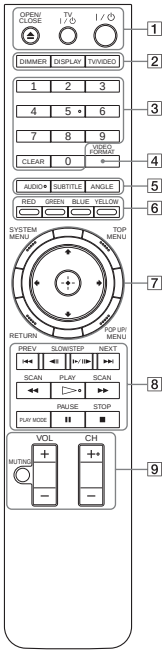

Number 5, AUDIO, CH+, and ⊳ buttons have a tactile dot. Use the tactile dot as a reference when operating the player.

1 ⏏ OPEN/CLOSE *(page 20)*
– Opens/closes the disc tray.

TV I/⏻ *(page 17)*
– Turns the TV on or to standby mode.

I/⏻ *(page 18)*
– Turns on, or sets the player to standby mode.

2 DIMMER *(page 59)*
– Changes the brightness of the front panel display on the player (when completely darkened, indicators on the front panel are also turned off and the FL OFF indicator lights up).

DISPLAY *(page 26)*
– Displays the disc information on the screen.

TV/VIDEO *(page 17)*
– Switches between TV and other input sources.

3 Number buttons *(page 26)*
– Enters the title/chapter numbers, etc.

CLEAR
– Clears the entry field.

4 VIDEO FORMAT *(page 45)*
– Changes the video output resolution from the HDMI OUT jack and the COMPONENT VIDEO OUT jacks. Press this button repeatedly if no picture appears.

5 AUDIO*1 *(page 49)*
– Selects the sound track or the language track on a BD/DVD.
*1 When playing MPEG-2 movie files or MP3 music files on a DATA DVD, or a music CD, you cannot use this button.

SUBTITLE *(page 49)*
– Selects the subtitle language on a BD/DVD.

ANGLE
– Switches to other viewing angles when available.

6 Color buttons (RED/GREEN/BLUE/YELLOW)
– Short cut keys for selecting items on some BD's menus (can also be used for BD's Java interactive operations).

7 SYSTEM MENU *(page 22)*
– Enters/exits the player's start menu ("System Menu").

TOP MENU *(page 20)*
– Opens/closes the BD's or DVD's top menu.

POP UP/MENU *(page 20)*
– Opens/closes the BD's pop up menu, or the DVD's disc menu.

RETURN *(page 20, 22)*
– Returns to the previous display.

←/↑/↓/→ *(page 20, 22)*
– Moves the highlight to select a displayed item.

Center button (ENTER) *(page 20, 22)*
– Enters the selected item.

8 I◄◄ /►►I PREV/NEXT
– Skips to the previous/next chapter, track, or file.

◄II/I►/II► SLOW/STEP*2
– Plays in slow motion or stop motion. To return to normal play, press ⊳.
• To play in slow motion
Press I► II► during playback. When slow motion play starts, press I► II► repeatedly to change the speed : 1/16 → 1/8 → 1/4 → 1/2 of normal playback speed.
• To play in stop motion (step by step)
Press II during playback, then press ◄II or I► II► repeatedly.

◄◄/►► SCAN*2
– Scans backwards or forward. The speed changes when pressed repeatedly.

*2 Depending on the disc or file type, the function may not work or the scan speeds may differ.

⊳ PLAY
– Starts or re-starts playback.

PLAY MODE
– Switches to other play modes (Repeat Play, etc.) when pressed during playback.
– Searches for a specific point *(page 26)*.

II PAUSE
– Pauses/re-starts playback.

■ STOP
– Stops playback.
– Clears the resume point when pressed twice. The resume point for a title is the last point you played, the last track for an audio file, or the last photo for a photo file.

9 For TVs operable with the following buttons, see *page 17*.

MUTING *(page 17)*
– Mutes the TV sound.

VOL (volume) +/– *(page 17)*
– Adjusts the TV volume.

CH (channel) +/– *(page 17)*
– Selects the TV channels up and down.

Playing in various play mode

BD DVD DATA DVD CD

1 During playback, press PLAY MODE repeatedly.
Available items differ depending on the current title/track/file or the disc type. To cancel the Play Mode, press PLAY MODE again.

◆When playing a video or movie title

Items	Details
Time Search	Searches for a specific point *(page 26)*.
Title Search (BD-ROM/DVD VIDEO only)	Searches for a title *(page 26)*.
Repeat Chapter (BD-ROM/DVD VIDEO only)	Repeats the current chapter.
Repeat Title	Repeats the current title.

◆When playing a music track

Items	Details
Repeat Track	Repeats the current track.
Repeat All	Repeats all the tracks on the disc or the "Music" Title List.
Random	Plays all the tracks on the disc or the "Music" Title List in a random order.

◆When playing a photo image

Items	Details
Repeat All	Repeats all the files on the disc or "Photos" Title List.
Random	Plays all the files on the disc or "Photos" Title List in a random order.

Searching using the remote

BD DVD DATA DVD CD

You can search by entering the title/chapter/track number or the time code (elapsed time from the beginning of the disc).

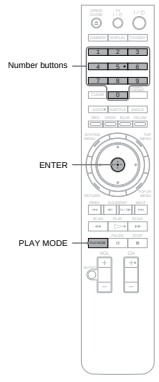

To search for a title, chapter, or track (BD-ROM, DVD VIDEO, CD only)

1 Enter the title number using the number buttons while the player is in stop mode.
To search for a chapter, enter the chapter number during playback. To search for a track, enter the track number during playback. If you make a mistake, press CLEAR once and re-enter.

2 Press ENTER to start playback.

To search for a specific point (BD-ROM, DVD VIDEO, DATA DVD only)

1 During playback, press PLAY MODE repeatedly until "Time Search" appears.

2 Enter the time code using the number buttons.
Enter the time in minutes and seconds (e.g., '12030' for 1 hour, 20 minutes and 30 seconds). If you make a mistake, press CLEAR once and re-enter.

3 Press ENTER to start playback.

Note
Depending on the DVD VIDEO/BD-ROM/DATA DVD/CD, these search functions may not work.

Checking the Disc Information

BD DVD DATA DVD CD

You can check the title/chapter/track information including video transmission rate etc., by pressing DISPLAY. The information differs depending on the disc type and the player status.

1 Press DISPLAY.

Example: When playing a DVD VIDEO.

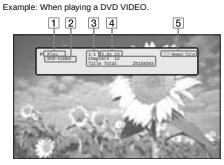

The following information appears:

1 Playback status

2 Disc type

3 Title information
• Currently playing title number/currently playing chapter number.
• Total number of chapters within the title.
• Total playback time of the title.

4 Elapsed time of the current title

5 Play mode

2 Press DISPLAY again.

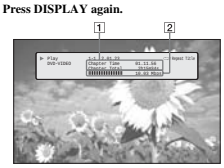

The display switches to show the following information:

1 Chapter information
• Elapsed time of the current chapter.
• Total playback time of the current chapter.

2 Video transmission rate and the stream information

➞continued

Hints
- You can also check disc information on the front panel display *(page 59)* or the Title List display *(page 22)*.
- You can check the audio information by pressing AUDIO.

Clarifying Low Volume Sounds (Audio DRC)

BD DVD DATA DVD

Even at low volume, you can make low sounds such as dialogs more audible.

Convenient when you cannot turn up the volume (e.g., at night)

1 Press SYSTEM MENU during playback.

2 Select "A/V Control," and press ENTER.

3 Select "Audio Control," and press ENTER to turn on the above display.

4 While "Audio DRC" is highlighted, select from "Max" to "Off" by pressing ←/→.

5 Press ENTER.

Note

"Audio DRC" is effective only when the disc is a Dolby Digital Blu-ray Disc or DVD, and:
– "Dolby Digital" in "Audio Setup" is set to "Downmix PCM" *(page 47)* and the audio signals are output from the DIGITAL OUT (OPTICAL or COAXIAL) jack or the HDMI OUT jack.
– "Audio (HDMI)" in "Audio Setup" is set to "PCM" *(page 47)* and the audio signals are output from the HDMI OUT jack.
– The audio signals are output from the AUDIO OUT (L/R) jacks or the 5.1CH OUTPUT jacks.

Adjusting the Pictures

BD DVD DATA DVD

The "cinema tuned" picture preset setting will allow you to maximize the visual impact of the BD or DVD you are watching by optimizing the picture settings for different lighting environments. "Memory" allows you to make your own detailed adjustments.

1 Press SYSTEM MENU during playback.

2 Select "A/V Control," and press ENTER.

3 Select "Video Control," and press ENTER to turn on the above display.

4 Press ←/→ to select a setting.

Items	Details
Brighter Room	For a room brighter than normal.
Theater Room	For a dark room such as a home theater.
Standard (default)	Normally, select this.
Memory (1-3)	Select a setting when you want to use the detailed picture adjustments you previously made, or when you want to make a new set. The player remembers up to three sets (see *page 28*).

5 Press ENTER.

Hint

The above description applies when the picture setting of your TV (if any) is set to 'Standard.'

Fine-tuning the picture to your preference

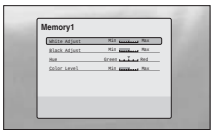

1 Select from "Memory 1" to "Memory 3" in step 4 of "*Adjusting the Pictures*" *(page 28)*.

2 Select "Detailed Settings," and press ENTER to turn on the above display.
To switch to another "Memory," press RETURN.

3 Select each of the picture elements, and adjust using ←/→.

◆ **To adjust while previewing the effect**
Select a setting and press ENTER to switch the display for the setting. Press ←/→ to adjust while checking the effect on the background playback picture. Then press ENTER to save the adjustment.

Underlined are the default settings for "Memory."

Items	Details
White Adjust (Min–(mid)–Max)	Adjusts the brightness of white colors.
Black Adjust (Min–(mid)–Max)	Adjusts the richness of dark colors.
Hue (Green–(mid)–Red)	Balances the green and the red colors.
Color Level (Min–(mid)–Max)	Adjusts the color saturation.

4 Press RETURN.

Locking a Disc

BD DVD

By setting the password and your limit in "Parental Control" Setup, you can control playback of inappropriate discs.

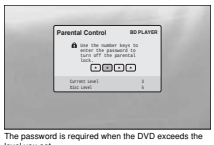

The password is required when the DVD exceeds the level you set.

Notes
- You cannot limit playback if the DVD VIDEO/BD-ROM does not have the "Parental Control" function.
- If you forget the password, you will have to return all of the player settings to their factory defaults *(page 53)*.
- The above display does not appear for BD-ROM. If you cannot play a BD-ROM because of Parental Control, reset "Change Age Restriction" of "BD Parental Control" *(page 50)*.

Setting/changing the password

BD DVD

1 Press SYSTEM MENU.

2 Select "Setup," and press ENTER.

3 Select "Parental Control," and press ENTER to turn on the above "Parental Control" Setup.

4 Select "Change Password (Set Password)," and press ENTER.

5 Select "Next Screen," and press ENTER to turn on the password display.

◆ **When you have not yet registered a password**
Enter a four-digit password using the number buttons, and press ↓. Re-enter it for confirmation, and press ENTER.

◆ **When you have already registered a password**
Enter the four-digit password using the number buttons, and press ENTER. Enter a new password and press ↓, then re-enter it for confirmation, and press ENTER.

Hint

To continue to set "DVD Parental Control," go to step 4 of *"Setting the Parental Control for DVD VIDEOs" (page 30)*.

Setting the Parental Control for DVD VIDEOs

DVD

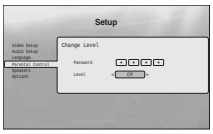

1 Press SYSTEM MENU.

2 Select "Setup," and press ENTER.

3 Select "Parental Control," and press ENTER to turn on the "Parental Control" Setup.

4 Select "DVD Parental Control," and press ENTER.

5 Select "Change Level," and press ENTER to turn on the above display.
This will set the playback limitation level.

6 Enter the password using the number buttons, and press ENTER.

7 Press ←/→ to select the limitation level from "Off" to "Level 8," and press ENTER.
Note that the lower the value, the stricter the limitation.

8 When the display returns to the "Parental Control" Setup, select "DVD Parental Control," and press ENTER.

9 Select "DVD Country Code," and press ENTER.
This ensures that you see the scenes intended for your residential area.

10 On the "DVD Country Code" display, enter the password using the number buttons, and press ENTER.

11 Press ←/→ to select your country code (see *page 69*), or press ↓ and enter the code for your area using the number buttons.

12 Press ENTER.

Hint

To continue to set "BD Parental Control," go to step 4 of *"Setting the Parental Control for BD-ROMs" (page 30)*.

Setting the Parental Control for BD-ROMs

BD

1 Press SYSTEM MENU.

2 Select "Setup," and press ENTER.

3 Select "Parental Control," and press ENTER to turn on the "Parental Control" Setup.

4 Select "BD Parental Control," and press ENTER.

5 Select "Change Age Restriction," and press ENTER to turn on the above display.
For BD-ROMs, the restriction is set by age, not by level.

6 Enter the password using the number buttons, and press ENTER.

7 Press ←/→ to select the age from "0" to "255," and press ENTER.

8 When the display returns to the "Parental Control" Setup, select "BD Parental Control," and press ENTER.

9 Select "BD Country Code," and press ENTER.
This ensures that you see the scenes intended for your residential area.

10 On the "BD Country Code" display, enter the password using the number buttons, and press ENTER.

11 Press ←/→ to select your country code (see *page 69*), or press ↓ and enter the code for your area using the number buttons.

12 Press ENTER.

→continued

Watching Movie Files

Use the "Movies" Title List to browse through and sort MPEG-2 PS movie files on DATA DVDs.

- *Viewing All Titles* 32
- *Browsing by Genre, Quicklist, or Folder* 34
- *Searching for a Title* 34
- *Programming Playback (Quicklist)* 35

Viewing All Titles

DATA DVD

The "Movies" Title List first displays all titles on the disc.

The Browse menu appears when you press ←

1 Press SYSTEM MENU.

2 Select "Title List," and press ENTER.

3 Select "Movies," and press ENTER.
The above "All Movies" display appears, showing all titles (scrollable by pressing ↓). From "All Movies" you can apply items to all titles using the Browse menu (see below).

To use the Browse menu

Press ← after step 3 to display the items for the "Movies" Title List. For operations, see the pages in parentheses. Available items differ depending on the display.

Items	Details
All Movies	Lists all titles (as above).
Browse	Displays a list of genres, Quicklist, or folders *(page 34)*.
Search	Searches for a title using the on-screen keyboard *(page 34)*.
Sort	Reorders the titles by date or alphabet (see below).

◆Example: To apply "Sort" to all titles

1 Select "Sort," and press ENTER.

2 Select the setting you want to sort by; "Recent first," "Oldest first," "By title (A→Z)," "By title (Z→A)," and press ENTER.

Playing a title

1 After step 3 of "*Viewing All Titles*" above, select the title you want to play, and press ENTER.
The title starts playing. You can apply other playback settings to the selected title using the "Options" menu (see below).

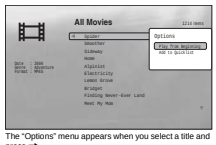

The "Options" menu appears when you select a title and press →

To use the "Options" menu

Press → instead of ENTER in the above step to display the "Options" menu settings applicable to the title in the given situation. In the above example, the following items are available.

Items	Details
Play from Beginning	Starts playing the title you selected from the beginning.
Add to Quicklist	Adds the selected title to the Quicklist.

◆Example: To apply "Play from Beginning" to the selected title

1 Select "Play from Beginning," and press ENTER.

To play in other play mode

During playback, press PLAY MODE repeatedly. The selected item changes with each press: "Time Search" *(page 26)* — "Repeat Title" — "Repeat Off"
See *page 25* for details.

Hint
See *page 24* for the remote's operations.

About the "Movies" (All Movies) Title List display

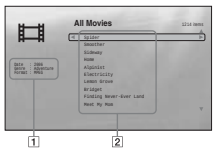

1 Detailed information
Displays details about the selected title.
- Date: Displays the recording year.
- Genre: Displays the genre name.
- Format: Displays the coding format.

2 List area
Displays the title names of all content.

Browsing by Genre, Quicklist, or Folder

DATA DVD

Narrow down the list of titles by selecting the category type (e.g., "Folders"), then the category.

1 Press SYSTEM MENU.

2 Select "Title List," and press ENTER.

3 Select "Movies," and press ENTER.

4 Press ← to turn on the Browse menu.

5 Select "Browse," and press ENTER.

6 Select the list you want to view from "Genres," "Quicklist," or "Folders," and press ENTER.
The list of genres/Quicklist/folders appears as above. For details about the Quicklist, see "*Programming Playback (Quicklist)*" (*page 35*).

7 Select the genre/Quicklist/folder you want to view, and press ENTER.

Hint
You can select a title and start playback by pressing ENTER, or using the "Options" menu (press →).

Searching for a Title

DATA DVD

You can find the exact title, or titles with a similar name.

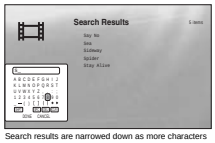

Search results are narrowed down as more characters are entered

1 Press SYSTEM MENU.

2 Select "Title List," and press ENTER.

3 Select "Movies," and press ENTER.

4 Press ← to turn on the Browse menu.

5 Select "Search," and press ENTER to turn on the above display.

6 Enter the title name using the on-screen keyboard (see *page 23*).

Hint
You can select a title and start playback by pressing ENTER, or using the "Options" menu (press →).

Programming Playback (Quicklist)

DATA DVD

Play your favorite titles in the order you like by making your own "Quicklist."

The "Quicklist" does not affect the original recording on the disc

1 Press SYSTEM MENU.

2 Select "Title List," and press ENTER.

3 Select "Movies," and press ENTER.

4 When the "All Movies" Title List appears, select the title you want to add to the top of the "Quicklist," and press →.

5 Select "Add to Quicklist" from the "Options" menu, and press ENTER.

6 Repeat step 4 and 5 to select all the desired titles.
Select in the order you want to play. You can add the same title multiple times.
The "Quicklist" can contain up to 25 titles.

7 Press ← to turn on the Browse menu.

8 Select "Browse," and press ENTER.

9 Select "Quicklist," and press ENTER to turn on the above display.
The "Quicklist" Title List appears with the programmed content.

10 Select the title you want to start playback, and press ENTER.

To remove the title from the "Quicklist"

1 Select the title you want to remove from the displayed "Quicklist," and press →.

2 Select "Remove," and press ENTER.

Hint
You can play the "Quicklist" content in other play modes by pressing PLAY MODE (*page 25*).

Note
The "Quicklist" may be cleared after some operations (e.g., displaying the Title List, opening the disc tray, turning off the player, etc.).

Listening to Music Files

Use the "Music" Title List to browse through and play the MP3 track files on DATA DVDs. You can make a "Quicklist" of your favorites and play in various play modes.

- *Viewing All Artists* 36
- *Browsing by Artist, Album, Genre, Quicklist, or Folder* 38
- *Searching for a Track* 38
- *Programming Playback (Quicklist)* 39

Viewing All Artists

DATA DVD

The "Music" Title List first displays a list of the artist names on the disc.

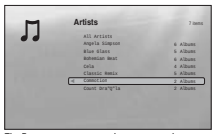

The Browse menu appears when you press ⬅

1 Press SYSTEM MENU.

2 Select "Title List," and press ENTER.

3 Select "Music," and press ENTER.
The above "Artists" display appears, showing all artist names (scrollable by pressing ⬇). From "Artists" you can apply items to all tracks using the Browse menu (see below).

To use the Browse menu

Press ⬅ after step 3 to display the items for the "Music" Title List. For operations, see the pages in parentheses. Available items differ depending on the display.

Items	Details
All Songs	Lists all tracks *(page 37)*.
Browse	Displays a list of artists, albums, genres, Quicklist, or folders *(page 38)*.
Search	Searches for a track using the on-screen keyboard *(page 38)*.
Sort	Reorders the tracks by alphabet, or year, etc. (see below).
Now Playing	Displays the track information and the playback information during playback.

◆Example: To apply "Sort" to all tracks

1 To display the list of tracks, select "All Songs" from the Browse menu and press ENTER.

2 Press ⬅ to turn on the Browse menu.

3 Select "Sort," and press ENTER.

4 Select the setting you want to sort by; "Recent first," "Oldest first," "By title (A→Z)," "By title (Z→A)," "By artist (A→Z)," "By artist (Z→A)," and press ENTER.

Playing a track

1 After step 3 of "*Viewing All Artists*" above, narrow down the list of tracks by selecting the artist, then the album.
To list all tracks, press ⬅ and select "All Songs" from the Browse menu.

2 Select the track you want to play, and press ENTER.
The title starts playing. You can apply other playback settings to the selected track using the "Options" menu (see below).

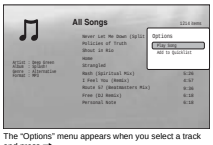

The "Options" menu appears when you select a track and press ➡

To use the "Options" menu

Press ➡ instead of ENTER in the above step to display the "Options" menu settings applicable to the track in the given situation. In the above example, the following items are available.

Items	Details
Play Song	Starts playing the track you selected from the beginning.
Add to Quicklist	Adds the selected track to the Quicklist.

◆Example: To apply "Play Song" to the selected track

1 Select "Play Song," and press ENTER.

To play in other play mode

During playback, press PLAY MODE repeatedly. The selected item changes with each press: "Repeat Track" — "Repeat All" — "Random" — "Repeat Off"
See *page 25* for details.

Hints
- See *page 24* for the remote's operations.
- Even after stopping playback, the player resumes playback from the last track you played.
- Depending on the writing software used, the displayed track or album names may be different from the characters you input.

Notes
- Playback time of MP3 audio tracks may not be displayed correctly.
- If you put an extension ".MP3" to a non-MP3 file, the file may accidentally play on the player. Note that such output may cause the connected device to malfunction.
- Playback may not start immediately after skipping to another album.
- When using the Resume function on MP3 tracks, playback starts from the beginning of the track.

About the "Music" (All Songs) Title List display

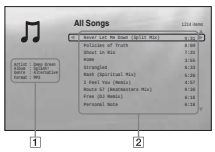

1 Detailed information
Displays details about the selected track.
- Artist: Displays the artist name.
- Album: Displays the album name.
- Genre: Displays the genre name.
- Format: Displays the coding format.

2 List area
Displays overall content.
- Main area: Displays the track names.
- Sub area: Displays the total playback time of each track.

About unplayable audio track files

The player does not play the file if:
– The DATA DVD is not recorded in an MP3 format that conforms to UDF (Universal Disk Format).
– The audio track file does not have the extension ".MP3."
– The data is not formatted properly even though it has the extension ".MP3."
– The data is not MPEG-1 Audio Layer III data.
– The data is recorded in mp3PRO format.
– The file name contains characters other than numbers and English alphabet.

Browsing by Artist, Album, Genre, Quicklist, or Folder

DATA DVD

Narrow down the list of tracks by selecting the category type (e.g., "Genres"), then the category.

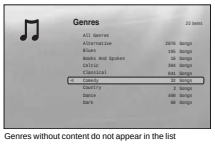

Genres without content do not appear in the list

1 Press SYSTEM MENU.

2 Select "Title List," and press ENTER.

3 Select "Music," and press ENTER.

4 Press ⬅ to turn on the Browse menu.

5 Select "Browse," and press ENTER.

6 Select the list you want to view from "Artists," "Albums," "Genres," "Quicklist" or "Folders," and press ENTER.
The list of artists/albums/genres/Quicklist/folders appears as above.
For details about the Quicklist, see "*Programming Playback (Quicklist)*" *(page 39)*.

7 Select the artist/album/genre/Quicklist/folder you want to view, and press ENTER.

Hint
You can select a track from the list of tracks, and start playback by pressing ENTER, or using the "Options" menu (press ➡).

Searching for a Track

DATA DVD

You can find the exact track, or tracks with a similar name.

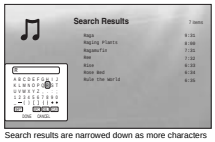

Search results are narrowed down as more characters are entered

1 Press SYSTEM MENU.

2 Select "Title List," and press ENTER.

3 Select "Music," and press ENTER.

4 Press ⬅ to turn on the Browse menu.

5 Select "All Songs," and press ENTER.

6 Press ⬅ to turn on the Browse menu.

7 Select "Search," and press ENTER to turn on the above display.

8 Enter the track name using the on-screen keyboard (see *page 23*).

Hints
- You can select a track from the search result, and start playback by pressing ENTER, or using the "Options" menu (press ➡).
- You can search for a genre, artist, album, or folder name from each Title List (e.g., "Genres").

Programming Playback (Quicklist)

DATA DVD

Play your favorite tracks in the order you like by making your own "Quicklist."

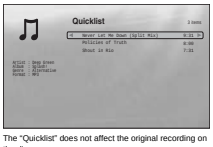

The "Quicklist" does not affect the original recording on the disc

1 Press SYSTEM MENU.

2 Select "Title List," and press ENTER.

3 Select "Music," and press ENTER.

4 Press ⬅ to turn on the Browse menu.

5 Select "All Songs," and press ENTER.

6 When the "All Songs" Title List appears, select the track you want to add to the top of the "Quicklist," and press ➡.

7 Select "Add to Quicklist" from the "Options" menu, and press ENTER.

8 Repeat step 6 and 7 to select all the desired tracks.
Select in the order you want to play. You can add the same track multiple times.
The "Quicklist" can contain up to 25 tracks.

9 Press ⬅ to turn on the Browse menu.

10 Select "Browse," and press ENTER.

11 Select "Quicklist," and press ENTER to turn on the above display.
The "Quicklist" Title List appears with the programmed content.

12 Select the track you want to start playback, and press ENTER.

To remove the title from the "Quicklist"

1 Select the track you want to remove from the displayed "Quicklist," and press ➡.

2 Select "Remove," and press ENTER.

Hint
You can play the "Quicklist" content in other play modes by pressing PLAY MODE (*page 25*).

Note
The "Quicklist" may be cleared after some operations (e.g., displaying the Title List, opening the disc tray, turning off the player, etc.).

Viewing Photo Files

Use the “Photos” Title List to view the JPEG images on DATA DVDs. You can reorder the files and start playing a slideshow.

- *Viewing All Folders* 40
- *Browsing by Date, Quicklist, or Folder* 42
- *Searching for a Photo* 42
- *Programming a Slideshow Playback (Quicklist)* 43

Viewing All Folders

DATA DVD

The “Photos” Title List first displays all the folders on the disc.

The Browse menu appears when you press ← while on the leftmost row

1 Press SYSTEM MENU.

2 Select “Title List,” and press ENTER.

3 Select “Photos,” and press ENTER.
The above “Folders” display appears, showing all folders (scrollable by pressing ↓). From “Folders” you can apply items to all files using the Browse menu (see below).

To use the Browse menu

Press ← after step 3 to display the items for “Photos” Title List. For operations, see the pages in parentheses. Available items differ depending on the display.

Items	Details
All Photos	Displays all files in alphabetical order *(page 41)*.
Browse	Displays a list of dates, Quicklist, or folders *(page 42)*.
Search	Searches for a file using the on-screen keyboard *(page 42)*.
Sort	Reorders the files by date or alphabet (see below).

◆Example: To apply “Sort” to all files

1 To display the list of all files, select “All Photos” from the Browse menu and press ENTER.

2 Move the highlight to the left most row, and press ← to turn on the Browse menu.

3 Select “Sort,” and press ENTER.

4 Select the setting you want to sort by; “Recent first,” “Oldest first,” “By title (A→Z),” “By title (Z→A),” and press ENTER.

Playing a slideshow

1 After step 3 of “*Viewing All Folders*” above, press ← and select “All Photos” from the Browse menu.

2 Select the file you want to start from, and press ENTER to turn on the “Options” menu.

3 Select “Slideshow,” and press ENTER.
Slideshow starts.
You can apply other playback settings to the selected file using the “Options” menu (see below).

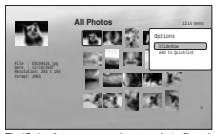

The “Options” menu appears when you select a file and press ENTER

To use the “Options” menu

Available “Options” menu settings differ depending on the situation. In the above example of the use of the “Options” menu, the following items are available.

Items	Details
Slideshow	Starts playing a slideshow as above.
Add to Quicklist	Adds the selected file to the Quicklist for later slideshow playback.

To play in other play mode

During playback, press PLAY MODE repeatedly. The selected item changes with each press:
“Repeat All” — “Random” — “Repeat Off”
See *page 25* for details.
Note that in Random mode, only files in the list area (20 files maximum) are randomly played.

Hints
- See *page 24* for the remote’s operations.
- Even after stopping playback, the player resumes playback from the last file you played.

Note
The photos may appear slowly depending on the size and the number of files.

About the “Photos” (All Photos) Title List display

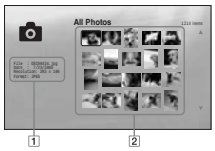

1 Detailed information
Displays details about the selected file.
- File: Displays the file name.
- Date: Displays the shooting date.
- Resolution: Displays the picture resolution in width × height.
- Format: Displays the recording format.

2 List area
Displays overall photo content in thumbnail.

About unplayable photo files

The player does not play the file if:
– The DATA DVD is not recorded in a JPEG format that conforms to UDF (Universal Disk Format).
– The photo file is not recorded in a format that conforms to the DCF*.
– The file has an extension other than “.JPEG.”
– The image is larger than 4,096 (width) × 4,096 (height) in normal mode, or progressive JPEG.
– The image does not fit the screen (the image is reduced).
– The file name contains characters other than numbers and English alphabet.
• Even when the above are not applicable, some files may not play depending on the recording condition or the method (e.g., writer software).
• Files may not play on this player if edited on a PC.
* “Design rule for Camera File system”: Image standards for digital cameras regulated by JEITA (Japan Electronics and Information Technology Industries Association).

Browsing by Date, Quicklist, or Folder

DATA DVD

Narrow down the list of files by selecting the category type (e.g., “Date”), then the category.

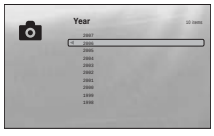

1 Press SYSTEM MENU.

2 Select “Title List,” and press ENTER.

3 Select “Photos,” and press ENTER.

4 Press ← to turn on the Browse menu.

5 Select “Browse,” and press ENTER.

6 Select the list you want to view from “Date,” “Quicklist,” or “Folders” and press ENTER.
The list of date/Quicklist/folders appears as above. For details about the Quicklist, see “*Programming a Slideshow Playback (Quicklist)*” *(page 43)*.

7 Select the date/Quicklist/folder you want to view, and press ENTER.

Hint
You can select a file and start slideshow by using “Options” menu (press →).

Searching for a Photo

DATA DVD

You can find the exact file, or files with a similar name.

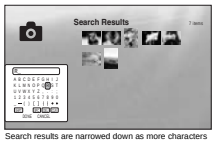

Search results are narrowed down as more characters are entered

1 Press SYSTEM MENU.

2 Select “Title List,” and press ENTER.

3 Select “Photos,” and press ENTER.

4 Press ← to turn on the Browse menu.

5 Select “All Photos,” and press ENTER.

6 Move the highlight to the leftmost row, and press ← to turn on the Browse menu.

7 Select “Search,” and press ENTER to turn on the above display.

8 Enter the file name using the on-screen keyboard (see *page 23*).

Hint
You can select a file and start slideshow by using “Options” menu (press →).

Programming a Slideshow Playback (Quicklist)

DATA DVD

Play a slideshow in the order you like by making your own “Quicklist.”

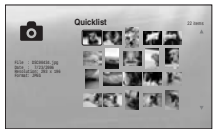

The “Quicklist” does not affect the original recording on the disc

1 Press SYSTEM MENU.

2 Select “Title List,” and press ENTER.

3 Select “Photos,” and press ENTER.

4 Press ← to turn on the Browse menu.

5 Select “All Photos,” and press ENTER.

6 When the “All Photos” Title List appears, select the file you want to add to the top of the “Quicklist,” and press ENTER.

7 Select “Add to Quicklist” from the “Options” menu, and press ENTER.

8 Repeat step 6 and 7 to select all the desired files.
Select in the order you want to play. You can add the same file multiple times.
The “Quicklist” can contain up to 25 files.

9 Move the highlight to the leftmost row, and press ← to turn on the Browse menu.

10 Select “Browse,” and press ENTER.

11 Select “Quicklist,” and press ENTER to turn on the above display.
The “Quicklist” Title List appears with the programmed content.

12 Select the file you want to start playback, and press ENTER.

13 Select “Slideshow” from the “Options” menu, and press ENTER.

To remove from the “Quicklist”

1 Select the file you want to remove from the displayed “Quicklist,” and press ENTER.

2 Select “Remove,” and press ENTER.

Hint
You can play the “Quicklist” content in other play modes by pressing PLAY MODE (*page 25*).

Note
The “Quicklist” may be cleared after some operations (e.g., displaying the Title List, opening the disc tray, turning off the player, etc.).

Changing the Initial Settings

Select “Setup” from the “System Menu” when you need to change the settings of the player (e.g., when changing the connected device or the audio/video output, etc.). The last part of this section explains how to return all of these settings to their factory defaults.

Note

Playback settings described in this section may not work when there is any preset playback setting in the disc. The disc’s playback settings take priority over the player’s playback settings.

- *Using the Setup Displays* 44
- *Video Setup* 45
- *Audio Setup* 47
- *Language* 49
- *Parental Control* 50
- *Speakers* 51
- *Options* 52
- *Resetting the Player* 53

Using the Setup Displays

BD DVD DATA DVD CD

From the “System Menu,” enter the “Setup” displays to change the settings of the player.

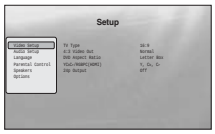

1 Press SYSTEM MENU while the player is stopped.

2 Select “Setup,” and press ENTER.

3 Select the “Setup” display you want to use, from “Video Setup,” “Audio Setup,” “Language,” “Parental Control,” “Speakers,” or “Options,” and press ENTER.
The “Setup” display appears with the related items. Note that the display switches to the screen saver if you do not operate for 15 minutes.

4 Select the item you want to change, and press ENTER.
Refer to the explanations in the following sections.

To return to the previous display

Press RETURN.

Video Setup

Underlined items are the default settings.

TV Type – Select your TV type.	**4:3** – 4:3 screen TV. **16:9** – Wide-screen TV, or a TV with a wide mode function.
4:3 Video Out – Select the display configuration for a 4:3 screen picture on a 16:9 wide screen TV.	**Full** – Displays a 4:3 screen picture in 16:9 aspect ratio. **Normal** – Displays a 4:3 screen picture in 4:3 aspect ratio with black bands on the sides. Select this if your TV does not have a 4:3 screen mode.
DVD Aspect Ratio – Select the display configuration for a 16:9 DVD picture on a 4:3 screen TV (selectable when “TV Type” is set to “4:3”). Note that the aspect ratio is fixed on some discs. For example, a 4:3 letterbox picture may appear even when “Pan & Scan” is selected.	**Letter Box** – Displays a wide picture with black bands on the top and bottom. **Pan & Scan** – Displays a full-height picture on the entire screen, with trimmed sides.
YCbCr / RGBPC (HDMI) – Select the type of output from the HDMI OUT jack.	**Y, Cb, Cr** – Select this when connecting to an HDMI device. **RGB (16-235)** – Select this when connecting to a device with an HDCP-compliant DVI jack. **RGB (0-255)** – Select this when connecting to an RGB (0-255) device.
24p Output – For connection to a 1080/24p-compatible TV using the HDMI OUT jack.	**On** – Sends 1920 × 1080p/24 Hz video signals when playing Film-based materials on BD-ROMs (720p/24 Hz or 1080p/24 Hz). Select this when the connection applies. **Off** – Select this for any other connection.

Note

“TV Type” and “DVD Aspect Ratio” can be set when video output resolution is 480i/480p.

➡continued

To set the video output resolution

Press VIDEO FORMAT repeatedly to select the desired resolution. Note that the resolution differs depending on the display device, connecting jack and the source material as below.

Settings \ Connecting jack	HDMI OUT	COMPONENT VIDEO OUT	VIDEO/S VIDEO
Auto	Automatically selects the recommended resolution acceptable for your TV.	480i	480i
480i	480i	480i	480i
480p	480p	480p	480i
720p	720p	BD:720p, DVD:480p*3	480i
1080i	1080i	BD:1080i, DVD:480p*3	480i
1080p	1080p	480p	480i
Source Direct	Output differs depending on source material*1	Output differs depending on source material*2	480i

*1 Outputs in the same resolution and frequency as recorded on the disc.
*2 1080/24p video signals are not output from the COMPONENT VIDEO OUT jacks.
*3 Outputs in the resolution of the original setting (720p or 1080i) when the DVD is not copy guarded.

Notes

- If the picture is not clear, natural or to your satisfaction, try another resolution that suits the disc and your TV/projector, etc. For the details, refer also to the instruction manual supplied with the TV/projector, etc.
- 480i or 480p video signals may be output when you connect to the COMPONENT VIDEO OUT jacks and play some copy-guarded BDs/DVDs. To enjoy the HD quality resolution in this case, connect the display device to the HDMI OUT jack using an HDMI cord.
- Even when you select a setting other than “Auto,” the player automatically adjusts the video signals if the TV cannot accept the set resolution.

To output the 1080/24p video signals

A 1080/24p-compatible TV is required for this setting.

1 Set “24p Output” in “Video Setup” to “On” *(page 45)*.

2 Press VIDEO FORMAT repeatedly to select “Auto” or “Source Direct.”

Note

If there is no picture, press VIDEO FORMAT repeatedly until the picture appears correctly.

Audio Setup

Underlined items are the default settings. Since many factors affect the type of audio output, see also *“About the audio output signals” on page 48*.

Dolby Digital – Select the audio signals output when playing Dolby Digital discs. This setting affects the output from the DIGITAL OUT (COAXIAL or OPTICAL) jack.	**Dolby Digital** – Select this when connecting to a device with a built-in Dolby Digital decoder. **Downmix PCM** – Converts to output Linear PCM signals. Select this when connecting to a device without a built-in Dolby Digital decoder.
DTS – Select the audio signals output when playing DTS discs. This setting affects the output from the DIGITAL OUT (COAXIAL or OPTICAL) jack.	**DTS** – Select this when connecting to a device with a built-in DTS decoder. **Downmix PCM** – Converts to output Linear PCM signals. Select this when connecting to a device without a built-in DTS decoder.
DTS Downmix – Select the type of 2-channel signals when down-mixed from multi-channel DTS sources (effective for audio connections when “DTS” is set to “Downmix PCM”).	**Stereo** – Downmixes multi-channel audio signals for two channel stereo. **Lt/Rt** – Allows you to hear surround sound when the connected device has a built-in Dolby Pro Logic decoder.
Audio (HDMI) – Select the output method from the HDMI OUT jack.	**Auto** – Normally, select this. Outputs audio signals according to the status of the connected HDMI device. **PCM** – Converts all audio signals to Linear PCM.

➡continued

About the audio output signals

The audio output differs as follows, depending on the source, output jack, and the selected settings.

Disc/source \ Jacks/settings		AUDIO OUT L/R jacks*1		DIGITAL OUT (OPTICAL/COAXIAL) jacks*2		HDMI OUT jack*3	
		2ch	5.1ch	PCM	Bitstream	PCM*4	Auto*4
BD-ROM	Linear PCM 2ch	2ch	2ch	2ch LPCM	2ch LPCM	2ch LPCM	2ch LPCM
	5.1ch*5	2ch Downmix	5.1ch	2ch Downmix LPCM	2ch Downmix LPCM	5.1ch LPCM	5.1ch LPCM
	7.1ch	2ch Downmix	5.1ch Downmix	2ch Downmix LPCM	2ch Downmix LPCM	7.1ch LPCM	7.1ch LPCM
	Dolby Digital	2ch Downmix	5.1ch	2ch Downmix LPCM	Dolby Digital	5.1ch LPCM	Dolby Digital
	Dolby Digital Plus	2ch Downmix	5.1ch	2ch Downmix LPCM	Dolby Digital	7.1ch LPCM (Dolby Digital Plus)*6	Dolby Digital Plus*8
	Dolby TrueHD	2ch Downmix	5.1ch	2ch Downmix LPCM	Dolby Digital	7.1ch LPCM (Dolby TrueHD) *7	Dolby TrueHD*8
	DTS	2ch Downmix	5.1ch	2ch Downmix LPCM	DTS	5.1ch LPCM	DTS
	DTS-HD High Resolution Audio	2ch Downmix	5.1ch	2ch Downmix LPCM	DTS	7.1ch LPCM (DTS-HD High Resolution Audio) *9	DTS-HD High Resolution Audio*8
	DTS-HD Master Audio	2ch Downmix	5.1ch	2ch Downmix LPCM	DTS	5.1ch LPCM	DTS
DVD	Linear PCM	2ch	2ch	2ch LPCM	2ch LPCM	2ch LPCM	2ch LPCM
	Dolby Digital	2ch Downmix	5.1ch	2ch Downmix LPCM	Dolby Digital	5.1ch LPCM	Dolby Digital
	DTS	2ch Downmix	5.1ch	2ch Downmix LPCM	DTS	5.1ch LPCM	DTS
	MPEG	2ch	2ch	2ch LPCM	—	2ch LPCM	2ch LPCM
CD	Linear PCM 2ch	2ch	2ch	2ch LPCM	2ch LPCM	2ch LPCM	2ch LPCM
	DTS	2ch Downmix	5.1ch	2ch Downmix LPCM	DTS	5.1ch LPCM	DTS

*1 "2 Channel" and "5.1 Channel" are selectable under "Audio Output Mode" in "Speakers" Setup *(page 51)*.
*2 PCM : when "Dolby Digital" or "DTS" in "Audio Setup" is set to "Downmix PCM" *(page 47)*.
Bitstream : when "Dolby Digital" or "DTS" in "Audio Setup" is set to "Dolby Digital" or "DTS" *(page 47)*.
*3 Selectable under "Audio (HDMI)" in "Audio Setup" *(page 47)*.
*4 Selectable under "Audio (HDMI)" in "Audio Setup" *(page 47)*. Resulting output may differ depending on the connected HDMI device.
*5 When the sampling frequency is 192 kHz, the player downmixes to 2ch signals even if the disc or source is 5.1ch.
*6 Outputs 7.1ch LPCM signals decoded from Dolby Digital Plus audio stream.
*7 Outputs 7.1ch LPCM signals decoded from Dolby TrueHD audio stream.
The player outputs up to 7.1ch LPCM when the source sampling frequency is 48 kHz; up to 5.1ch at 96 kHz; up to 2ch at 192 kHz.
*8 Outputs Dolby Digital Plus, Dolby TrueHD or DTS-HD High Resolution Audio bitstream from the HDMI OUT jack respectively when using the AV amplifier compatible with Dolby Digital Plus, Dolby TrueHD or DTS-HD.
*9 Outputs 7.1ch LPCM signals decoded from DTS-HD High Resolution Audio stream.
The player outputs up to 7.1ch LPCM when the source sampling frequency is 48 kHz; up to 5.1ch at 96 kHz.

Language

Underlined items are the default settings.

Notes

- When you select a language in "Audio," "Subtitles," "BD/DVD Menu" that is not recorded on the disc, one of the recorded languages is automatically selected.
- Playback settings stored in the disc take priority over these settings.

OSD – Select your language for the player on-screen displays.	**English** – Displays the menus and messages in English. **Français** – Displays the menus and messages in French.
Audio – Select the default soundtrack language for BD-ROMs/DVD VIDEOs.	**English** – Plays the soundtrack in English. **French** – Plays the soundtrack in French. **Other** – See *"Language Code List" on page 68* and enter the code for your language.
Subtitles – Select the default subtitle language for BD-ROMs/DVD VIDEOs.	**English** – Displays the subtitles in English. **French** – Displays the subtitles in French. **Other** – See *"Language Code List" on page 68* and enter the code for your language.
BD/DVD Menu – Select the default menu language for BD-ROMs/DVD VIDEOs.	**w/Subtitle** – Displays BD's/DVD's menus in the same language as the subtitle language. **English** – Displays BD's/DVD's menus in English. **French** – Displays BD's/DVD's menus in French. **Other** – See *"Language Code List" on page 68* and enter the code for your language.
Subtitle Display	**On** – Turns on the subtitles. **Off** – Turns off the subtitles.

Parental Control

This function limits playback of DVD VIDEOs and BD-ROMs.
To activate, see *"Locking a Disc" (page 29)*.
The default settings are underlined.

Notes

- You cannot limit playback if the disc does not have the Parental Control function.
- If you forget the password for "Parental Control," you will need to reset the player *(page 53)*. Note that all the settings you made also return to their defaults.

Change Password (Set Password)	**Next Screen** – Set or change the password for the "Parental Control" function. You will be asked for the password when playing restricted discs or when changing the control level.
DVD Parental Control	**Change Level** – Set the control level. The display asks for the password if the disc's pre-determined level exceeds the limit you set. The default setting is "Off." **DVD Country Code** – This ensures that you see the scenes intended for your residential area. The default setting is "us" (2119).
BD Parental Control	**Change Age Restriction** – Set the control level. The display asks for the password if the disc's pre-determined age restriction is higher than the age you set. The default setting is "255." **BD Country Code** – This ensures that you see the scenes intended for your residential area when playing BD-ROMs. The default setting is "us" (2119).

Speakers

The following items are necessary when using the 5.1CH OUTPUT jacks.
The default settings are underlined.

Audio Output Mode – For analog connection.	**2 Channel** – Select this when connecting to an AV amplifier (receiver) using the AUDIO OUT (L/R) jacks. **5.1 Channel** – Select this when connecting to an AV amplifier (receiver) using the 5.1CH OUTPUT jacks.
Speaker Setup – This setting affects the output from the 5.1CH OUTPUT jacks.	**Next Screen** 1 Select the speaker setting that needs adjusting by pressing ↑/↓. • "C" (center speaker): "Yes" or "No" • "Ls/Rs" (left surround speaker/right surround speaker): "Yes" or "No" • "L/R" (left front speaker/right front speaker): "Large" or "Small" 2 Adjust the setting by pressing ←/→. • For "C" and "Ls/Rs," select whether the speakers are included in your system. • For "L/R," select the size. This setting is disabled if either of "C" or "Ls/Rs" is set to "No." 3 Press ENTER to save the adjustments.

Options

Underlined items are the default settings.

On Screen Display – Select whether to display the playback status on the screen (Stop, Play, etc.).	**On** – Displays playback status. **Off** – Playback status is not displayed.
Auto Power Off – Select whether to activate the "Auto Power Off" function of the player.	**On** – Turns off the player when the player is left in stop or pause mode without operation for 30 minutes. **Off** – The player remains turned on with or without operation.
Easy Setup – Re-runs the Easy Setup to make the basic settings.	**Start** – Press ENTER and see *page 18*.
HDMI Control – Select whether to activate the HDMI Control function of the player (*"About the 'BRAVIA' Theatre Sync features (for HDMI connections only)" on page 11*).	**On** – Activates the function. **Off** – Turns off the function.
Hybrid Disc Playback Layer – Select the layer priority when playing a Hybrid Disc. Remove the disc when you change the setting.	**BD** – Plays BD layer. **DVD** – Plays DVD layer. **CD** – Plays CD layer.

Resetting the Player

You can return all of the player settings to their factory defaults.

1 **Press ⏏ OPEN/CLOSE to open the disc tray.**

2 **Hold down ■ on the player, and press I/⏻.**

3 **After you check the disc tray closes, release both the buttons.**
The sliding panel closes, the player turns off and all of the settings return to their factory defaults.

Additional Information

- *Troubleshooting* 54
- *Self-Diagnosis Function* 57
- *Index to Parts and Controls* 58
- *GNU License Information* 60
- *Glossary* 66
- *Specifications* 67
- *Language Code List* 68
- *Parental Control Country/Area Code List* 69
- *Index* 70

Troubleshooting

If you experience any of the following difficulties while using the player, use this troubleshooting guide to help remedy the problem before requesting repairs. Should any problem persist, consult your nearest Sony dealer (For customers in the USA only).

Power

The power does not turn on.
➡ Check that the power cord is connected securely.
➡ It takes a short while before the player turns on.

Picture

There is no picture/picture noise appears.
➡ Re-connect the connecting cord securely.
➡ The connecting cords are damaged.
➡ Check the connection to your TV *(page 10)* and switch the input selector on your TV so that the signal from the player appears on the TV screen.
➡ The disc is dirty or flawed.
➡ If the picture output from your player goes through your VCR to get to your TV or if you are connected to a combination TV/VIDEO player, the copy-protection signal applied to some BD/DVD programs could affect picture quality. If you still experience problems even when you connect your player directly to your TV, try connecting your player to your TV's S VIDEO input *(page 10)*.
➡ The player is connected to an input device that is not HDCP-compliant (the HDMI indicator on the front panel does not light up). See *page 11*.
➡ If the HDMI OUT jack or the COMPONENT VIDEO OUT jacks are used for video output, changing the output resolution may solve the problem *(page 46)*. Press VIDEO FORMAT repeatedly until the picture appears correctly.
➡ Depending on the disc, the picture quality may be poor when the VIDEO FORMAT setting is set to other than "480i," even when the player is connected to a progressive or HD TV using a component cord or an HDMI cord. If this happens, press VIDEO FORMAT repeatedly to switch to "480i."
➡ When playing a double-layer DVD, the video and audio may be momentarily interrupted at the point where the layers switch.

There is no picture or picture noise appears when connected to the HDMI OUT jack.
➡ Try the following: ①Turn the player off and on again. ②Turn the connected equipment off and on again. ③Disconnect and then connect the HDMI cord again.
➡ If the HDMI OUT jack is used for video output, changing the video output resolution may solve the problem *(page 46)*. Press VIDEO FORMAT repeatedly until the picture appears correctly.

The picture does not fill the screen, even though the aspect ratio is set in "TV Type" under "Video Setup."
➡ The aspect ratio of the disc is fixed on your BD/DVD. See *page 45*.

The dark area of the picture is too dark/the bright area is too bright or unnatural.
➡ Set "Video Control" in "A/V Control" to "Standard" (default) *(page 28)*.
➡ Adjust each picture setting for "Memory" in "Video Control" to midpoint (default) *(page 28)*.

Sound

There is no sound.
➡ The disc is dirty or flawed.
➡ Re-connect the connecting cord securely.
➡ The connecting cord is damaged.
➡ The player is connected to the wrong input jack on the amplifier (receiver) *(page 12)*.
➡ The amplifier (receiver) input is not correctly set.
➡ The player is in pause mode or in Slow-motion Play mode.
➡ The player is in scan mode.
➡ If the audio signal does not come through the DIGITAL OUT (OPTICAL or COAXIAL)/HDMI OUT jack, check the audio settings *(page 47)*.
➡ The equipment connected to the HDMI OUT jack does not conform to the audio signal format, in this case set "Audio (HDMI)" in "Audio Setup" to "PCM" *(page 47)*.

The sound is not output correctly.
➡ Check the "Audio Output Mode" in "Speakers" Setup *(page 51)* if the AUDIO OUT (L/R) jacks or the 5.1CH OUTPUT jacks are used for audio connection.

No sound is output from the HDMI OUT jack
➡ Try the following: ①Turn the player off and on again. ②Turn the connected equipment off and on again. ③Disconnect and then reconnect the HDMI cord.
➡ The HDMI OUT jack is connected to a DVI device (DVI jacks do not accept audio signals).

The sound volume is low.
➡ The sound volume is low on some BDs/DVDs. The sound volume may improve if you adjust the "Audio Control" setting in "A/V Control" *(page 27)*.

Operation

The remote does not function.
➡ The batteries in the remote are weak *(page 16)*.
➡ There are obstacles between the remote and the player.
➡ The distance between the remote and the player is too far.
➡ The remote is not pointed at the remote sensor on the player.

The disc does not play.
➡ The disc is turned over. Insert the disc with the playback side facing down.
➡ The disc is skewed.
➡ The player cannot play certain discs *(page 6)*.
➡ The region code on the BD/DVD does not match the player.
➡ Moisture has condensed inside the player *(page 3)*.
➡ The player cannot play a recorded disc that is not correctly finalized *(page 6)*.
➡ The movie file size exceeds 2 GB.
➡ The file on the DATA DVD contains characters other than numbers and English alphabet.

The MP3 audio track file cannot be played *(page 36)*.
➡ The DATA DVD is not recorded in the MP3 format that conforms to UDF (Universal Disk Format).
➡ The audio track file does not have the extension ".MP3."
➡ The data is not formatted properly even though it has the extension ".MP3."
➡ The data is not MPEG-1 Audio Layer III data.
➡ The player cannot play audio tracks in mp3PRO format.
➡ Characters other than numbers and English alphabet are contained in the file name.

The photo file cannot be played *(page 40)*.
➡ The disc is dirty or flawed.
➡ The DATA DVD is not recorded in a JPEG format that conforms to UDF (Universal Disk Format).
➡ The file has an extension other than ".JPEG" or ".JPG."
➡ The image is larger than 4,096 (width) × 4,096 (height) in normal mode. (Some progressive JPEG files cannot be displayed even if the file size is within this specified capacity.)
➡ The image does not fit the screen (the image is reduced).
➡ The photo file format does not conform to DCF* *(page 41)*.
➡ Characters other than numbers and English alphabet are contained in the file name.

* "Design rule for Camera File system": Image standards for digital cameras regulated by JEITA (Japan Electronics and Information Technology Industries Association).

The file name is not correctly displayed.
➡ The player can only display numbers and alphabet. Other characters may be displayed differently.
➡ Depending on the writing software used, the input characters may be displayed differently.

The disc does not start playing from the beginning.
➡ Random Play or Repeat Play is selected *(page 25)*.
➡ Resume play mode is on *(page 20)*.

The player starts playing the disc automatically.
➡ The disc features an auto playback function.

Playback stops automatically.
➡ While playing discs with an auto pause signal, the player stops playback at the auto pause signal.

➡ *continued*

Some functions such as Stop, Search, Slow-motion Play, Repeat Play, or Random Play cannot be performed.

➡ Depending on the disc, you may not be able to do some of the operations above. Refer to the operating manual that comes with the disc.

The language for the soundtrack cannot be changed.

➡ Try using the BD's or DVD's menu instead of the direct selection button on the remote *(page 21)*.
➡ Multi-lingual tracks are not recorded on the BD/DVD being played.
➡ The BD/DVD prohibits the changing of the language for the sound track.

The subtitle language cannot be changed or turned off.

➡ Try using the BD's or DVD's menu instead of the direct selection button on the remote *(page 21)*.
➡ Multi-lingual subtitles are not recorded on the BD/DVD being played.
➡ The BD/DVD prohibits the changing of subtitles.

The angles cannot be changed.

➡ Try using the BD's or DVD's menu instead of the direct selection button on the remote *(page 21)*.
➡ Multi-angles are not recorded on the BD/DVD being played.
➡ The BD/DVD prohibits changing of the angles.

The HDMI Control function does not work.

➡ If the HDMI indicator on the front panel does not light up, check the HDMI connection *(page 11, 15)*.
➡ Set "HDMI Control" to "On" *(page 52)*.
➡ Make sure that the connected component is compatible with the HDMI Control function. Refer to the operating instructions of the component for details.
➡ Check that the power cord of the connected component is connected securely.
➡ Check the connected component's setting for the HDMI Control function. Refer to the operating instructions of the component.
➡ If you change the HDMI connection, connect and disconnect the power cord, or if power failure occurs, set "HDMI Control" to "Off," then set "HDMI Control" to "On" *(page 52)*.
➡ For details on the HDMI Control function, see *"About the 'BRAVIA' Theatre Sync features (for HDMI connections only)" (page 11)*.

The display language on the screen switches automatically.

➡ When "HDMI Control" is set to "On" *(page 52)*, the display language on the screen automatically switches according to the language setting of the connected TV (if you change the setting on your TV, etc).

The player does not operate properly.

➡ When static electricity, etc., causes the player to operate abnormally, unplug the player.

The disc tray does not open and "LOCK" appears on the front panel display.

➡ Contact your Sony dealer or local authorized Sony service facility.

The disc tray does not open and you cannot remove the disc even after you press ⏏.

➡ Try the following: ①Turn the player off and on again, and immediately press UP/DOWN to open the sliding panel. ②As soon as "POWER ON" appears on the front panel display, press ■ on the player (not the remote) repeatedly until the tray opens. Repeat the above procedure several times if the tray does not open on the first try.

An error message appears and the file cannot be played when playing a DATA DVD.

➡ See also *"The photo file cannot be played"* or *"The MP3 audio track file cannot be played" (page 55)*.
➡ The MP3 audio track/JPEG image file you want to play/view is damaged.
➡ The data is not MPEG-1 Audio Layer III data.
➡ The JPEG image file format does not conform to DCF* *(page 41)*.
➡ The JPEG image file has the extension ".JPG" or ".JPEG," but is not in JPEG format.

* "Design rule for Camera File system": Image standards for digital cameras regulated by JEITA (Japan Electronics and Information Technology Industries Association).

The player does not accept any button.

➡ Hold down I/⏻ on the player for more than five seconds until the indicators on the front panel display turn off. Wait more than 10 seconds before you turn on the player again.

Self-Diagnosis Function

When the self-diagnosis function is activated to prevent the player from malfunctioning, the "ERR" error code appears on the front panel display indicating the cause.

Error code	Cause and/or corrective action
AACS ERR	AACS read failure. →Remove the protected disc.
LSI1 ERR LSI2 ERR LSI3 ERR MEM ERR FLASH ERR ROM ERR	→Contact your nearest Sony dealer or local authorized Sony service facility and give the error code.

Index to Parts and Controls

Buttons on the remote and the player have the same function if they have the same or similar name.
For details, see the pages in parentheses.

Front panel

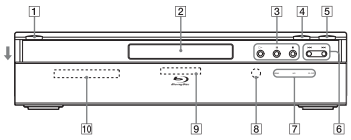

1 **I/⏻ *(20)***
– Turns on the player, or sets to standby mode.

2 **Disc tray *(20)***

3 **▻, ❚❚, ■ *(20)***
– Starts, pauses, or stops playback.

4 **UP/DOWN *(20)***
– Shifts the sliding panel up and down.

5 **⏏ OPEN/CLOSE *(20)***
– Opens or closes the disc tray.

6 **⏮/⏭ *(24)***
– Skips to the previous/next chapter or track.
– Scans forward or backwards when held down.

7 **HDMI indicator *(11)***
– Lights up when an HDMI device is connected.
HD indicator *(11)*
– Lights up when outputting 720p/1080i/1080p video signals.
FL OFF indicator *(24)*
– Lights up when the front panel display and other indicators on the front panel are turned off.

8 **Remote sensor *(16)***

9 **Blu-ray Disc indicator**
– Lights up when a BD/AVCHD is recognized.
– Lights up for a few seconds when the player is turned on.

10 **Front panel display *(59)***

Front panel display

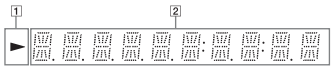

1 ▻
– Lights up during playback.

2 **Playback information**

Hint
You can change the brightness of the front panel display by pressing DIMMER *(page 24)*.

The playback information is displayed as follows.

Example: When playing a DVD VIDEO or a BD-ROM

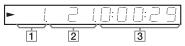

1 **Current title number**

2 **Current chapter number**
Note that the chapter number is not displayed if the title's elapsed time exceeds 10 hours.

3 **Elapsed time of the title**

Rear panel

For connections, see *page 10* to *16*.

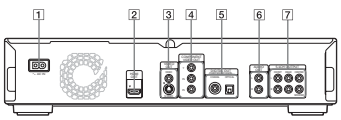

1 **AC IN terminal *(16)***

2 **HDMI OUT jack *(11, 12, 15)***

3 **VIDEO OUT (VIDEO/S VIDEO) jacks *(10)***

4 **COMPONENT VIDEO OUT (Y/PB/PR) jacks *(10)***

5 **DIGITAL OUT (COAXIAL/OPTICAL) jacks *(13, 14)***

6 **AUDIO OUT (L/R) jacks *(13, 14)***

7 **5.1CH OUTPUT (FRONT L/R, REAR L/R, CENTER, WOOFER) jacks *(14)***

GNU License Information

Regarding the GNU General Public License

The software programs used on this component include the GNU/Linux system.
The GNU/Linux system contains software licensed for use based on the terms of a GNU General Public License. If necessary, the user may request the source code for this licensed software. The source code is available on our website. Access the following URL to download:
http://www.sony.net/Products/Linux
Please refrain from making inquiries about the source code content.
Details of the GNU General Public License can be found at the GNU website
(http://www.gnu.org).

GNU General Public License

Version 2, June 1991
Copyright (C) 1989, 1991 Free Software Foundation, Inc.
59 Temple Place - Suite 330, Boston, MA 02111-1307, USA
Everyone is permitted to copy and distribute verbatim copies of this license document, but changing it is not allowed.

◆Preamble

The licenses for most software are designed to take away your freedom to share and change it. By contrast, the GNU General Public License is intended to guarantee your freedom to share and change free software-to make sure the software is free for all its users. This General Public License applies to most of the Free Software Foundation's software and to any other program whose authors commit to using it. (Some other Free Software Foundation software is covered by the GNU Lesser General Public License instead.) You can apply it to your programs, too.
When we speak of free software, we are referring to freedom, not price. Our General Public Licenses are designed to make sure that you have the freedom to distribute copies of free software (and charge for this service if you wish), that you receive source code or can get it if you want it, that you can change the software or use pieces of it in new free programs; and that you know you can do these things.
To protect your rights, we need to make restrictions that forbid anyone to deny you these rights or to ask you to surrender the rights. These restrictions translate to certain responsibilities for you if you distribute copies of the software, or if you modify it.
For example, if you distribute copies of such a program, whether gratis or for a fee, you must give the recipients all the rights that you have. You must make sure that they, too, receive or can get the source code. And you must show them these terms so they know their rights.
We protect your rights with two steps: (1) copyright the software, and (2) offer you this license which gives you legal permission to copy, distribute and/or modify the software.
Also, for each author's protection and ours, we want to make certain that everyone understands that there is no warranty for this free software. If the software is modified by someone else and passed on, we want its recipients to know that what they have is not the original, so that any problems introduced by others will not reflect on the original authors' reputations.
Finally, any free program is threatened constantly by software patents. We wish to avoid the danger that redistributors of a free program will individually obtain patent licenses, in effect making the program proprietary. To prevent this, we have made it clear that any patent must be licensed for everyone's free use or not licensed at all.
The precise terms and conditions for copying, distribution and modification follow.

TERMS AND CONDITIONS FOR COPYING, DISTRIBUTION AND MODIFICATION

0. This License applies to any program or other work which contains a notice placed by the copyright holder saying it may be distributed under the terms of this General Public License. The "Program", below, refers to any such program or work, and a "work based on the Program" means either the Program or any derivative work under copyright law: that is to say, a work containing the Program or a portion of it, either verbatim or with modifications and/or translated into another language. (Hereinafter, translation is included without limitation in the term "modification".) Each licensee is addressed as "you".
Activities other than copying, distribution and modification are not covered by this License; they are outside its scope. The act of running the Program is not restricted, and the output from the Program is covered only if its contents constitute a work based on the Program (independent of having been made by running the Program). Whether that is true depends on what the Program does.
1. You may copy and distribute verbatim copies of the Program's source code as you receive it, in any medium, provided that you conspicuously and appropriately publish on each copy an appropriate copyright notice and disclaimer of warranty; keep intact all the notices that refer to this License and to the absence of any warranty; and give any other recipients of the Program a copy of this License along with the Program.
You may charge a fee for the physical act of transferring a copy, and you may at your option offer warranty protection in exchange for a fee.
2. You may modify your copy or copies of the Program or any portion of it, thus forming a work based on the Program, and copy and distribute such modifications or work under the terms of Section 1 above, provided that you also meet all of these conditions:
   a) You must cause the modified files to carry prominent notices stating that you changed the files and the date of any change.
   b) You must cause any work that you distribute or publish, that in whole or in part contains or is derived from the Program or any part thereof, to be licensed as a whole at no charge to all third parties under the terms of this License.
   c) If the modified program normally reads commands interactively when run, you must cause it, when started running for such interactive use in the most ordinary way, to print or display an announcement including an appropriate copyright notice and a notice that there is no warranty (or else, saying that you provide a warranty) and that users may redistribute the program under these conditions, and telling the user how to view a copy of this License. (Exception: if the Program itself is interactive but does not normally print such an announcement, your work based on the Program is not required to print an announcement.)
These requirements apply to the modified work as a whole. If identifiable sections of that work are not derived from the Program, and can be reasonably considered independent and separate works in themselves, then this License, and its terms, do not apply to those sections when you distribute them as separate works. But when you distribute the same sections as part of a whole which is a work based on the Program, the distribution of the whole must be on the terms of this License, whose permissions for other licensees extend to the entire whole, and thus to each and every part regardless of who wrote it.
Thus, it is not the intent of this section to claim rights or contest your rights to work written entirely by you; rather, the intent is to exercise the right to control the distribution of derivative or collective works based on the Program.
In addition, mere aggregation of another work not based on the Program with the Program (or with a work based on the Program) on a volume of a storage or distribution medium does not bring the other work under the scope of this License.
3. You may copy and distribute the Program (or a work based on it, under Section 2) in object code or executable form under the terms of Sections 1 and 2 above provided that you also do one of the following:
   a) Accompany it with the complete corresponding machine-readable source code, which must be distributed under the terms of Sections 1 and 2 above on a medium customarily used for software interchange; or,
   b) Accompany it with a written offer, valid for at least three years, to give any third party, for a charge no more than your cost of physically performing source distribution, a complete machine-readable copy of the corresponding source code, to be distributed under the terms of Sections 1 and 2 above on a medium customarily used for software interchange; or,
   c) Accompany it with the information you received as to the offer to distribute corresponding source code. (This alternative is allowed only for noncommercial distribution and only if you received the program in object code or executable form with such an offer, in accord with Subsection b above.)
The source code for a work means the preferred form of the work for making modifications to it. For an executable work, complete source code means all the source code for all modules it contains, plus any associated interface definition files, plus the scripts used to control compilation and installation of the executable.
However, as a special exception, the source code distributed need not include anything that is normally distributed (in either source or binary form) with the major components (compiler, kernel, and so on) of the operating system on which the executable runs, unless that component itself accompanies the executable.
If distribution of executable or object code is made by offering access to copy from a designated place, then offering equivalent access to copy the source code from the same place counts as distribution of the source code, even though third parties are not compelled to copy the source along with the object code.
4. You may not copy, modify, sublicense, or distribute the Program except as expressly provided under this License. Any attempt otherwise to copy, modify, sublicense or distribute the Program is void, and will automatically terminate your rights under this License.
However, parties who have received copies, or rights, from you under this License will not have their licenses terminated so long as such parties remain in full compliance.
5. You are not required to accept this License, since you have not signed it. However, nothing else grants you permission to modify or distribute the Program or its derivative works. These actions are prohibited by law if you do not accept this License. Therefore, by modifying or distributing the Program (or any work based on the Program), you indicate your acceptance of this License to do so, and all its terms and conditions for copying, distributing or modifying the Program or works based on it.
6. Each time you redistribute the Program (or any work based on the Program), the recipient automatically receives a license from the original licensor to copy, distribute or modify the Program subject to these terms and conditions. You may not impose any further restrictions on the recipients' exercise of the rights granted herein. You are not responsible for enforcing compliance by third parties to this License.
7. If, as a consequence of a court judgment or allegation of patent infringement or for any other reason (not limited to patent issues), conditions are imposed on you (whether by court order, agreement or otherwise) that contradict the conditions of this License, they do not excuse you from the conditions of this License. If you cannot distribute so as to satisfy simultaneously your obligations under this License and any other pertinent obligations, then as a consequence you may not distribute the Program at all. For example, if a patent license would not permit royalty-free redistribution of the Program by all those who receive copies directly or indirectly through you, then the only way you could satisfy both it and this License would be to refrain entirely from distribution of the Program.
If any portion of this section is held invalid or unenforceable under any particular circumstance, the balance of the section is intended to apply and the section as a whole is intended to apply in other circumstances.
It is not the purpose of this section to induce you to infringe any patents or other property right claims or to contest validity of any such claims; this section has the sole purpose of protecting the integrity of the free software distribution system, which is implemented by public license practices. Many people have made generous contributions to the wide range of software distributed through that system in reliance on consistent application of that system; it is up to the author/donor to decide if he or she is willing to distribute software through any other system and a licensee cannot impose that choice.
This section is intended to make thoroughly clear what is believed to be a consequence of the rest of this License.
8. If the distribution and/or use of the Program is restricted in certain countries either by patents or by copyrighted interfaces, the original copyright holder who places the Program under this License may add an explicit geographical distribution limitation excluding those countries, so that distribution is permitted only in or among countries not thus excluded. In such case, this License incorporates the limitation as if written in the body of this License.
9. The Free Software Foundation may publish revised and/or new versions of the General Public License from time to time. Such new versions will be similar in spirit to the present version, but may differ in detail to address new problems or concerns.
Each version is given a distinguishing version number. If the Program specifies a version number of this License which applies to it and "any later version", you have the option of following the terms and conditions either of that version or of any later version published by the Free Software Foundation. If the Program does not specify a version number of this License, you may choose any version ever published by the Free Software Foundation.
10. If you wish to incorporate parts of the Program into other free programs whose distribution conditions are different, write to the author to ask for permission. For software which is copyrighted by the Free Software Foundation, write to the Free Software Foundation; we sometimes make exceptions for this. Our decision will be guided by the two goals of preserving the free status of all derivatives of our free software and of promoting the sharing and reuse of software generally.

◆NO WARRANTY

11. BECAUSE THE PROGRAM IS LICENSED FREE OF CHARGE, THERE IS NO WARRANTY FOR THE PROGRAM, TO THE EXTENT PERMITTED BY APPLICABLE LAW. EXCEPT WHEN OTHERWISE STATED IN WRITING THE COPYRIGHT HOLDERS AND/OR OTHER PARTIES PROVIDE THEPROGRAM "AS IS" WITHOUT WARRANTY OF ANY KIND, EITHER EXPRESSED OR IMPLIED, INCLUDING, BUT NOT LIMITED TO, THE IMPLIED WARRANTIES OF MERCHANTABILITY AND FITNESS FOR A PARTICULAR PURPOSE. THE ENTIRE RISK AS TO THE QUALITY AND PERFORMANCE OF THE PROGRAM IS WITH YOU. SHOULD THE PROGRAM PROVE DEFECTIVE, YOU ASSUME THE COST OF ALL NECESSARY SERVICING, REPAIROR CORRECTION.
12. IN NO EVENT UNLESS REQUIRED BY APPLICABLE LAW OR AGREED TO IN WRITING WILL ANY COPYRIGHT HOLDER, OR ANY OTHER PARTY WHOMAY MODIFY AND/OR REDISTRIBUTE THE PROGRAM AS PERMITTED ABOVE, BE LIABLE TO YOU FOR DAMAGES, INCLUDING ANY GENERAL,SPECIAL, INCIDENTAL OR CONSEQUENTIAL DAMAGES ARISING OUT OF THE USE OR INABILITY TO USE THE PROGRAM (INCLUDING BUT NOT LIMITED TO LOSS OF DATA OR DATA BEING RENDERED INACCURATE OR LOSSES SUSTAINED BY YOU OR THIRD PARTIES OR A FAILURE OF THE PROGRAM TO OPERATE WITH ANY OTHER PROGRAMS), EVEN IF SUCH HOLDER OR OTHER PARTY HAS BEEN ADVISED OF THE POSSIBILITY OF SUCH DAMAGES.

◆END OF TERMS AND CONDITIONS

◆How to Apply These Terms to Your New Programs

If you develop a new program, and you want it to be of the greatest possible use to the public, the best way to achieve this is to make it free software which everyone can redistribute and change under these terms.
To do so, attach the following notices to the program. It is safest to attach them to the start of each source file to most effectively convey the exclusion of warranty; and each file should have at least the "copyright" line and a pointer to where the full notice is found.
<one line to give the program's name and an idea of what it does.>
Copyright (C) yyyy name of author
This program is free software; you can redistribute it and/or modify it under the terms of the GNU General Public License as published by the Free Software Foundation; either version 2 of the License, or (at your option) any later version. This program is distributed in the hope that it will be useful, but WITHOUT ANY WARRANTY; without even the implied warranty of MERCHANTABILITY or FITNESS FOR A PARTICULAR PURPOSE. See the GNU General Public License for more details.
You should have received a copy of the GNU General Public License along with this program; if not, write to the Free Software Foundation, Inc., 59 Temple Place - Suite 330, Boston, MA 02111-1307, USA.
Also add information on how to contact you by electronic and paper mail.

If the program is interactive, make it output a short notice like this when it starts in an interactive mode:
Gnomovision version 69, Copyright (C) year name of author
Gnomovision comes with ABSOLUTELY NO WARRANTY; for details type 'show w'. This is free software, and you are welcome to redistribute it under certain conditions; type 'show c' for details.
The hypothetical commands 'show w' and 'show c' should show the appropriate parts of the General Public License. Of course, the commands you use may be called something other than 'show w' and 'show c'; they could even be mouse-clicks or menu items-whatever suits your program.
You should also get your employer (if you work as a programmer) or your school, if any, to sign a "copyright disclaimer" for the program, if necessary. Here is a sample; alter the names:
Yoyodyne, Inc., hereby disclaims all copyright interest in the program 'Gnomovision' (which makes passes at compilers) written by James Hacker.
signature of Ty Coon, 1 April 1989
Ty Coon, President of Vice
This General Public License does not permit incorporating your program into proprietary programs. If your program is a subroutine library, you may consider it more useful to permit linking proprietary applications with the library. If this is what you want to do, use the GNU Lesser General Public License instead of this License.

GNU Lesser General Public License

Version 2.1, February 1999
Copyright (C) 1991, 1999 Free Software Foundation, Inc.
59 Temple Place, Suite 330, Boston, MA 02111-1307, USA
Everyone is permitted to copy and distribute verbatim copies of this license document, but changing it is not allowed.
[This is the first released version of the Lesser GPL. It also counts as the successor of the GNU Library Public License, version 2, hence the version number2.1.]

◆Preamble

The licenses for most software are designed to take away your freedom to share and change it. By contrast, the GNU General Public Licenses are intended to guarantee your freedom to share and change free software-to make sure the software is free for all its users. This license, the Lesser General Public License, applies to some specially designated software packages-typically libraries-of the Free Software Foundation and other authors who decide to use it. You can use it too, but we suggest you first think carefully about whether this license or the ordinary General Public License is the better strategy to use in any particular case, based on the explanations below.
When we speak of free software, we are referring to freedom of use, not price. Our General Public Licenses are designed to make sure that you have the freedom to distribute copies of free software (and charge for this service if you wish); that you receive source code or can get it if you want it; that you can change the software and use pieces of it in new free programs; and that you are informed that you can do these things.
To protect your rights, we need to make restrictions that forbid distributors to deny you these rights or to ask you to surrender these rights. These restrictions translate to certain responsibilities for you if you distribute copies of the library or if you modify it.
For example, if you distribute copies of the library, whether gratis or for a fee, you must give the recipients all the rights that we gave you. You must make sure that they, too, receive or can get the source code. If you link other code with the library, you must provide complete object files to the recipients, so that they can relink them with the library after making changes to the library

➡continued

and recompiling it. And you must show them these terms so they know their rights.
We protect your rights with a two-step method: (1) we copyright the library, and (2) we offer you this license, which gives you legal permission to copy, distribute and/or modify the library.
To protect each distributor, we want to make it very clear that there is no warranty for the free library. Also, if the library is modified by someone else and passed on, the recipients should know that what they have is not the original version, so that the original author's reputation will not be affected by problems that might be introduced by others.
Finally, software patents pose a constant threat to the existence of any free program. We wish to make sure that a company cannot effectively restrict the users of a free program by obtaining a restrictive license from a patent holder.
Therefore, we insist that any patent license obtained for a version of the library must be consistent with the full freedom of use specified in this license. Most GNU software, including some libraries, is covered by the ordinary GNU General Public License. This license, the GNU Lesser General Public License, applies to certain designated libraries, and is quite different from the ordinary General Public License. We use this license for certain libraries in order to permit linking those libraries into non-free programs.
When a program is linked with a library, whether statically or using a shared library, the combination of the two is legally speaking a combined work, a derivative of the original library. The ordinary General Public License therefore permits such linking only if the entire combination fits its criteria of freedom. The Lesser General Public License permits more lax criteria for linking other code with the library.
We call this license the "Lesser" General Public License because it does Less to protect the user's freedom than the ordinary General Public License. It also provides other free software developers Less of an advantage over competing non-free programs. These disadvantages are the reason we use the ordinary General Public License for many libraries. However, the Lesser license provides advantages in certain special circumstances.
For example, on rare occasions, there may be a special need to encourage the widest possible use of a certain library, so that it becomes a de facto standard. To achieve this, non-free programs must be allowed to use the library.
A more frequent case is that a free library does the same job as widely used non-free libraries. In this case, there is little to gain by limiting the free library to free software only, so we use the Lesser General Public License.
In other cases, permission to use a particular library in non-free programs enables a greater number of people to use a large body of free software. For example, permission to use the GNU C Library in non-free programs enables many more people to use the whole GNU operating system, as well as its variant, the GNU/Linux operating system.
Although the Lesser General Public License is Less protective of the users' freedom, it does ensure that the user of a program that is linked with the Library has the freedom and the wherewithal to run that program using a modified version of the Library.
The precise terms and conditions for copying, distribution and modification follow. Pay close attention to the difference between a "work based on the library" and a "work that uses the library". The former contains code derived from the library, whereas the latter must be combined with the library in order to run.

TERMS AND CONDITIONS FOR COPYING, DISTRIBUTION AND MODIFICATION

0. This License Agreement applies to any software library or other program which contains a notice placed by the copyright holder or other authorized party saying it may be distributed under the terms of this Lesser General Public License (also called "this License"). Each licensee is addressed as "you".
A "library" means a collection of software functions and/or data prepared so as to be conveniently linked with application programs (which use some of those functions and data) to form executables.
The "Library", below, refers to any such software library or work which has been distributed under these terms. A "work based on the Library" means either the Library or any derivative work under copyright law: that is to say, a work containing the Library or a portion of it, either verbatim or with modifications and/or translated straightforwardly into another language. (Hereinafter, translation is included without limitation in the term "modification".)
"Source code" for a work means the preferred form of the work for making modifications to it. For a library, complete source code means all the source code for all modules it contains, plus any associated interface definition files, plus the scripts used to control compilation and installation of the library.
Activities other than copying, distribution and modification are not covered by this License; they are outside its scope. The act of running a program using the Library is not restricted, and output from such a program is covered only if its contents constitute a work based on the Library (independent of the use of the Library in a tool for writing it). Whether that is true depends on what the Library does and what the program that uses the Library does.
1. You may copy and distribute verbatim copies of the Library's complete source code as you receive it, in any medium, provided that you conspicuously and appropriately publish on each copy an appropriate copyright notice and disclaimer of warranty; keep intact all the notices that refer to this License and to the absence of any warranty; and distribute a copy of this License along with the Library.
You may charge a fee for the physical act of transferring a copy, and you may at your option offer warranty protection in exchange for a fee.
2. You may modify your copy or copies of the Library or any portion of it, thus forming a work based on the Library, and copy and distribute such modifications or work under the terms of Section 1 above, provided that you also meet all of these conditions:
   a) The modified work must itself be a software library.
   b) You must cause the files modified to carry prominent notices stating that you changed the files and the date of any change.
   c) You must cause the whole of the work to be licensed at no charge to all third parties under the terms of this License.
   d) If a facility in the modified Library refers to a function or a table of data to be supplied by an application program that uses the facility, other than as an argument passed when the facility is invoked, then you must make a good faith effort to ensure that, in the event an application does not supply such function or table, the facility still operates, and performs whatever part of its purpose remains meaningful.
(For example, a function in a library to compute square roots has a purpose that is entirely well-defined independent of the application. Therefore, Subsection 2d requires that any application-supplied function or table used by this function must be optional: if the application does not supply it, the square root function must still compute square roots.) These requirements apply to the modified work as a whole. If identifiable sections of that work are not derived from the Library, and can be reasonably considered independent and separate works in themselves, then this License, and its terms, do not apply to those sections when you distribute them as separate works. But when you distribute the same sections as part of a whole which is a work based on the Library, the distribution of the whole must be on the terms of this License, whose permissions for other licensees extend to the entire whole, and thus to each and every part regardless of who wrote it.
Thus, it is not the intent of this section to claim rights or contest your rights to work written entirely by you; rather, the intent is to exercise the right to control the distribution of derivative or collective works based on the Library.
In addition, mere aggregation of another work not based on the Library with the Library (or with a work based on the Library) on a volume of a storage or distribution medium does not bring the other work under the scope of this License.
3. You may opt to apply the terms of the ordinary GNU General Public License instead of this License to a given copy of the Library. To do this, you must alter all the notices that refer to this License, so that they refer to the ordinary GNU General Public License, version 2, instead of to this License. (If a newer version than version 2 of the ordinary GNU General Public License has appeared, then you can specify that version instead if you wish.) Do not make any other change in these notices.
Once this change is made in a given copy, it is irreversible for that copy, so the ordinary GNU General Public License applies to all subsequent copies and derivative works made from that copy. This option is useful when you wish to copy part of the code of the Library into a program that is not a library.
4. You may copy and distribute the Library (or a portion or derivative of it, under Section 2) in object code or executable form under the terms of Sections1 and 2 above provided that you accompany it with the complete corresponding machine-readable source code, which must be distributed under the terms of Sections 1 and 2 above on a medium customarily used for software interchange.
If distribution of object code is made by offering access to copy from a designated place, then offering equivalent access to copy the source code from the same place satisfies the requirement to distribute the source code, even though third parties are not compelled to copy the source along with the object code.
5. A program that contains no derivative of any portion of the Library, but is designed to work with the Library by being compiled or linked with it, is called a "work that uses the Library". Such a work, in isolation, is not a derivative work of the Library, and therefore falls outside the scope of this License. However, linking a "work that uses the Library" with the Library creates an executable that is a derivative of the Library (because it contains portions of the Library), rather than a "work that uses the library". The executable is therefore covered by this License. Section 6 states terms for distribution of such executables.
When a "work that uses the Library" uses material from a header file that is part of the Library, the object code for the work may be a derivative work of the Library even though the source code is not. Whether this is true is especially significant if the work can be linked without the Library, or if the work is itself a library. The threshold for this to be true is not precisely defined by law.
If such an object file uses only numerical parameters, data structure layouts and accessors, and small macros and small inline functions (ten lines or less in length), then the use of the object file is unrestricted, regardless of whether it is legally a derivative work. (Executables containing this object code plus portions of the Library will still fall under Section 6.)
Otherwise, if the work is a derivative of the Library, you may distribute the object code for the work under the terms of Section 6. Any executables containing that work also fall under Section 6, whether or not they are linked directly with the Library itself.
6. As an exception to the Sections above, you may also combine or link a "work that uses the Library" with the Library to produce a work containing portions of the Library, and distribute that work under terms of your choice, provided that the terms permit modification of the work for the customer's own use and reverse engineering for debugging such modifications.
You must give prominent notice with each copy of the work that the Library is used in it and that the Library and its use are covered by this License. You must supply a copy of this License. If the work during execution displays copyright notices, you must include the copyright notice for the Library among them, as well as a reference directing the user to the copy of this License.
Also, you must do one of these things:
   a) Accompany the work with the complete corresponding machine-readable source code for the Library including whatever changes were used in the work (which must be distributed under Sections 1 and 2 above); and, if the work is an executable linked with the Library, with the complete machine-readable "work that uses the Library", as object code and/or source code, so that the user can modify the Library and then relink to produce a modified executable containing the modified Library. (It is understood that the user who changes the contents of definitions files in the Library will not necessarily be able to recompile the application to use the modified definitions.)
   b) Use a suitable shared library mechanism for linking with the Library. A suitable mechanism is one that (1) uses at run time a copy of the library already present on the user's computer system, rather than copying library functions into the executable, and (2) will operate properly with a modified version of the library, if the user installs one, as long as the modified version is interface-compatible with the version that the work was made with.
   c) Accompany the work with a written offer, valid for at least three years, to give the same user the materials specified in Subsection 6a, above, for a charge no more than the cost of performing this distribution.
   d) If distribution of the work is made by offering access to copy from a designated place, offer equivalent access to copy the above specified materials from the same place.
   e) Verify that the user has already received a copy of these materials or that you have already sent this user a copy.
For an executable, the required form of the "work that uses the Library" must include any data and utility programs needed for reproducing the executable from it. However, as a special exception, the materials to be distributed need not include anything that is normally distributed (in either source or binary form) with the major components (compiler, kernel, and so on) of the operating system on which the executable runs, unless that component itself accompanies the executable.
It may happen that this requirement contradicts the license restrictions of other proprietary libraries that do not normally accompany the operating system. Such a contradiction means you cannot use both them and the Library together in an executable that you distribute.
7. You may place library facilities that are a work based on the Library side-by-side in a single library together with other library facilities not covered by this License, and distribute such a combined library, provided that the separate distribution of the work based on the Library and of the other library facilities is otherwise permitted, and provided that you do these two things:
   a) Accompany the combined library with a copy of the same work based on the Library, uncombined with any other library facilities. This must be distributed under the terms of the Sections above.
   b) Give prominent notice with the combined library of the fact that part of it is a work based on the Library, and explaining where to find the accompanying uncombined form of the same work.
8. You may not copy, modify, sublicense, link with, or distribute the Library except as expressly provided under this License. Any attempt otherwise to copy, modify, sublicense, link with, or distribute the Library is void, and will automatically terminate your rights under this License. However, parties who have received copies, or rights, from you under this License will not have their licenses terminated so long as such parties remain in full compliance.
9. You are not required to accept this License, since you have not signed it. However, nothing else grants you permission to modify or distribute the Library or its derivative works. These actions are prohibited by law if you do not accept this License. Therefore, by modifying or distributing the Library (or any work based on the Library), you indicate your acceptance of this License to do so, and all its terms and conditions for copying, distributing or modifying the Library or works based on it.
10. Each time you redistribute the Library (or any work based on the Library), the recipient automatically receives a license from the original licensor to copy, distribute, link with or modify the Library subject to these terms and conditions. You may not impose any further restrictions on the recipients' exercise of the rights granted herein. You are not responsible for enforcing compliance by third parties with this License.
11. If, as a consequence of a court judgment or allegation of patent infringement or for any other reason (not limited to patent issues), conditions are imposed on you (whether by court order, agreement or otherwise) that contradict the conditions of this License, they do not excuse you from the conditions of this License. If you cannot distribute so as to satisfy simultaneously your obligations under this License and any other pertinent obligations, then as a consequence you may not distribute the Library at all.
For example, if a patent license would not permit royalty-free redistribution of the Library by all those who receive copies directly or indirectly through you, then the only way you could satisfy both it and this License would be to refrain entirely from distribution of the Library. If any portion of this section is held invalid or unenforceable under any particular circumstance, the balance of the section is intended to apply, and the section as a whole is intended to apply in other circumstances.
It is not the purpose of this section to induce you to infringe any patents or other property right claims or to contest validity of any such claims; this section has the sole purpose of protecting the integrity of the free software distribution system which is implemented by public license practices. Many people have made generous contributions to the wide range of software distributed through that system in reliance on consistent application of that system; it is up to the author/donor to decide if he or she is willing to distribute software through any other system and a licensee cannot impose that choice.
This section is intended to make thoroughly clear what is believed to be a consequence of the rest of this License.
12. If the distribution and/or use of the Library is restricted in certain countries either by patents or by copyrighted interfaces, the original copyright holder who places the Library under this License may add an explicit geographical distribution limitation excluding those countries, so that distribution is permitted only in or among countries not thus excluded. In such case, this License incorporates the limitation as if written in the body of this License.
13. The Free Software Foundation may publish revised and/or new versions of the Lesser General Public License from time to time. Such new versions will be similar in spirit to the present version, but may differ in detail to address new problems or concerns.
Each version is given a distinguishing version number. If the Library specifies a version number of this License which applies to it and "any later version", you have the option of following the terms and conditions either of that version or of any later version published by the Free Software Foundation. If the Library does not specify a license version number, you may choose any version ever published by the Free Software Foundation.
14. If you wish to incorporate parts of the Library into other free programs whose distribution conditions are incompatible with these, write to the author to ask for permission. For software which is copyrighted by the Free Software Foundation, write to the Free Software Foundation; we sometimes make exceptions for this. Our decision will be guided by the two goals of preserving the free status of all derivatives of our free software and of promoting the sharing and reuse of software generally.

◆NO WARRANTY

15. BECAUSE THE LIBRARY IS LICENSED FREE OF CHARGE, THERE IS NO WARRANTY FOR THE LIBRARY, TO THE EXTENT PERMITTED BY APPLICABLE LAW. EXCEPT WHEN OTHERWISE STATED IN WRITING THE COPYRIGHT HOLDERS AND/OR OTHER PARTIES PROVIDE THE LIBRARY "AS IS" WITHOUT WARRANTY OF ANY KIND, EITHER EXPRESSED OR IMPLIED, INCLUDING, BUT NOT LIMITED TO, THE IMPLIED WARRANTIESOF MERCHANTABILITY AND FITNESS FOR A PARTICULAR PURPOSE. THE ENTIRE RISK AS TO THE QUALITY AND PERFORMANCE OF THELIBRARY IS WITH YOU. SHOULD THE LIBRARY PROVE DEFECTIVE, YOU ASSUME THE COST OF ALL NECESSARY SERVICING, REPAIR OR CORRECTION.
16. IN NO EVENT UNLESS REQUIRED BY APPLICABLE LAW OR AGREED TO IN WRITING WILL ANY COPYRIGHT HOLDER, OR ANY OTHER PARTY WHOMAY MODIFY AND/OR REDISTRIBUTE THE LIBRARY AS PERMITTED ABOVE, BE LIABLE TO YOU FOR DAMAGES, INCLUDING

➡continued

ANY GENERAL, SPECIAL, INCIDENTAL OR CONSEQUENTIAL DAMAGES ARISING OUT OF THE USE OR INABILITY TO USE THE LIBRARY (INCLUDING BUT NOTLIMITED TO LOSS OF DATA OR DATA BEING RENDERED INACCURATE OR LOSSES SUSTAINED BY YOU OR THIRD PARTIES OR A FAILURE OFTHE LIBRARY TO OPERATE WITH ANY OTHER SOFTWARE), EVEN IF SUCH HOLDER OR OTHER PARTY HAS BEEN ADVISED OF THE POSSIBILITY OF SUCH DAMAGES.

◆END OF TERMS AND CONDITIONS

◆How to Apply These Terms to Your New Libraries

If you develop a new library, and you want it to be of the greatest possible use to the public, we recommend making it free software that everyone can redistribute and change. You can do so by permitting redistribution under these terms (or, alternatively, under the terms of the ordinary General Public License).
To apply these terms, attach the following notices to the library. It is safest to attach them to the start of each source file to most effectively convey the exclusion of warranty; and each file should have at least the "copyright" line and a pointer to where the full notice is found.

<one line to give the library's name and an idea of what it does.>
Copyright (C) year name of author

This library is free software; you can redistribute it and/or modify it under the terms of the GNU Lesser General Public License as published by the Free Software Foundation; either version 2.1 of the License, or (at your option) any later version.
This library is distributed in the hope that it will be useful, but WITHOUT ANY WARRANTY; without even the implied warranty of MERCHANTABILITY or FITNESS FOR A PARTICULAR PURPOSE. See the GNU Lesser General Public License for more details.
You should have received a copy of the GNU Lesser General Public License along with this library; if not, write to the Free Software Foundation, Inc., 59Temple Place, Suite 330, Boston, MA 02111-1307, USA
Also add information on how to contact you by electronic and paper mail.
You should also get your employer (if you work as a programmer) or your school, if any, to sign a "copyright disclaimer" for the library, if necessary. Here is a sample; alter the names:
Yoyodyne, Inc., hereby disclaims all copyright interest in the library 'Frob' (a library for tweaking knobs) written by James Random Hacker.
signature of Ty Coon, 1 April 1990
Ty Coon, President of Vice
That's all there is to it!

OpenSSL License

◆OpenSSL

Copyright (c) 1998-2004 The OpenSSL Project. All rights reserved.

Redistribution and use in source and binary forms, with or without modification, are permitted provided that the following conditions are met:

1. Redistributions of source code must retain the above copyright notice, this list of conditions and the following disclaimer.
2. Redistributions in binary form must reproduce the above copyright notice, this list of conditions and the following disclaimer in the documentation and/or other materials provided with the distribution.
3. All advertising materials mentioning features or use of this software must display the following acknowledgment:
"This product includes software developed by the OpenSSL Project for use in the OpenSSL Toolkit. (http://www.openssl.org/)"
4. The names "OpenSSL Toolkit" and "OpenSSL Project" must not be used to endorse or promote products derived from this software without prior written permission.
For written permission, please contact openssl-core@openssl.org.
5. Products derived from this software may not be called "OpenSSL" nor may "OpenSSL" appear in their names without prior written permission of the OpenSSL Project.
6. Redistributions of any form whatsoever must retain the following acknowledgment:
"This product includes software developed by the OpenSSL Project for use in the OpenSSL Toolkit (http://www.openssl.org/)"

THIS SOFTWARE IS PROVIDED BY THE OpenSSL PROJECT "AS IS" AND ANY EXPRESSED OR IMPLIED WARRANTIES, INCLUDING, BUT NOT LIMITED TO, THE IMPLIED WARRANTIES OF MERCHANTABILITY AND FITNESS FOR A PARTICULAR PURPOSE ARE DISCLAIMED. IN NO EVENT SHALL THE OpenSSL PROJECT OR ITS CONTRIBUTORS BE LIABLE FOR ANY DIRECT, INDIRECT, INCIDENTAL, SPECIAL, EXEMPLARY, OR CONSEQUENTIAL DAMAGES (INCLUDING, BUT NOT LIMITED TO, PROCUREMENT OF SUBSTITUTE GOODS OR SERVICES; LOSS OF USE, DATA, OR PROFITS; OR BUSINESS INTERRUPTION) HOWEVER CAUSED AND ON ANY THEORY OF LIABILITY, WHETHER IN CONTRACT, STRICT LIABILITY, OR TORT (INCLUDING NEGLIGENCE OR OTHERWISE) ARISING IN ANY WAY OUT OF THE USE OF THIS SOFTWARE, EVEN IF ADVISED OF THE POSSIBILITY OF SUCH DAMAGE.

This product includes cryptographic software written by Eric Young (eay@cryptsoft.com). This product includes software written by Tim Hudson (tjh@cryptsoft.com).

Original SSLeay License

◆Original SSLeay

Copyright (C) 1995-1998 Eric Young (eay@cryptsoft.com) All rights reserved.

This package is an SSL implementation written by Eric Young (eay@cryptsoft.com).
The implementation was written so as to conform with Netscapes SSL.

This library is free for commercial and non-commercial use as long as the following conditions are aheared to. The following conditions apply to all code found in this distribution, be it the RC4, RSA, lhash, DES, etc., code; not just the SSL code. The SSL documentation included with this distribution is covered by the same copyright terms except that the holder is Tim Hudson (tjh@cryptsoft.com).

Copyright remains Eric Young's, and as such any Copyright notices in the code are not to be removed.
If this package is used in a product, Eric Young should be given attribution as the author of the parts of the library used.
This can be in the form of a textual message at program startup or in documentation (online or textual) provided with the package.

Redistribution and use in source and binary forms, with or without modification, are permitted provided that the following conditions are met:

1. Redistributions of source code must retain the copyright notice, this list of conditions and the following disclaimer.
2. Redistributions in binary form must reproduce the above copyright notice, this list of conditions and the following disclaimer in the documentation and/or other materials provided with the distribution.
3. All advertising materials mentioning features or use of this software must display the following acknowledgement:
"This product includes cryptographic software written by Eric Young (eay@cryptsoft.com)"
The word 'cryptographic' can be left out if the rouines from the library being used are not cryptographic related :-).
4. If you include any Windows specific code (or a derivative thereof) from the apps directory (application code) you must include an acknowledgement:
"This product includes software written by Tim Hudson (tjh@cryptsoft.com)"

THIS SOFTWARE IS PROVIDED BY ERIC YOUNG "AS IS" AND ANY EXPRESS OR IMPLIED WARRANTIES, INCLUDING, BUT NOT LIMITED TO, THE IMPLIED WARRANTIES OF MERCHANTABILITY AND FITNESS FOR A PARTICULAR PURPOSE ARE DISCLAIMED. IN NO EVENT SHALL THE AUTHOR OR CONTRIBUTORS BE LIABLE FOR ANY DIRECT, INDIRECT, INCIDENTAL, SPECIAL, EXEMPLARY, OR CONSEQUENTIAL DAMAGES (INCLUDING, BUT NOT LIMITED TO, PROCUREMENT OF SUBSTITUTE GOODS OR SERVICES; LOSS OF USE, DATA, OR PROFITS; OR BUSINESS INTERRUPTION) HOWEVER CAUSED AND ON ANY THEORY OF LIABILITY, WHETHER IN CONTRACT, STRICT LIABILITY, OR TORT (INCLUDING NEGLIGENCE OR OTHERWISE) ARISING IN ANY WAY OUT OF THE USE OF THIS SOFTWARE, EVEN IF ADVISED OF THE POSSIBILITY OF SUCH DAMAGE.

The licence and distribution terms for any publically available version or derivative of this code cannot be changed. i.e. this code cannot simply be copied and put under another distribution licence [including the GNU Public Licence.]

FreeType

The FreeType Project is copyright (C) 1996-2000 by David Turner, Robert Wilhelm, and Werner Lemberg. All rights reserved except as specified below.

THE FREETYPE PROJECT IS PROVIDED 'AS IS' WITHOUT WARRANTY OF ANY KIND, EITHER EXPRESS OR IMPLIED, INCLUDING, BUT NOT LIMITED TO, WARRANTIES OF MERCHANTABILITY AND FITNESS FOR A PARTICULAR PURPOSE. IN NO EVENT WILL ANY OF THE AUTHORS OR COPYRIGHT HOLDERS BE LIABLE FOR ANY DAMAGES CAUSED BY THE USE OR THE INABILITY TO USE, OF THE FREETYPE PROJECT.

Howl

Copyright (c) 2003, 2004 Porchlog Software All rights reserved.

THIS SOFTWARE IS PROVIDED BY THE COPYRIGHT HOLDERS AND CONTRIBUTORS "AS IS" AND ANY EXPRESS OR IMPLIED WARRANTIES, INCLUDING, BUT NOT LIMITED TO, THE IMPLIED WARRANTIES OF MERCHANTABILITY AND FITNESS FOR A PARTICULAR PURPOSE ARE DISCLAIMED. IN NO EVENT SHALL THE COPYRIGHT OWNER OR CONTRIBUTORS BE LIABLE FOR ANY DIRECT, INDIRECT, INCIDENTAL, SPECIAL, EXEMPLARY, OR CONSEQUENTIAL DAMAGES (INCLUDING, BUT NOT LIMITED TO, PROCUREMENT OF SUBSTITUTE GOODS OR SERVICES; LOSS OF USE, DATA, OR PROFITS; OR BUSINESS INTERRUPTION) HOWEVER CAUSED AND ON ANY THEORY OF LIABILITY, WHETHER IN CONTRACT, STRICT LIABILITY, OR TORT (INCLUDING NEGLIGENCE OR OTHERWISE) ARISING IN ANY WAY OUT OF THE USE OF THIS SOFTWARE, EVEN IF ADVISED OF THE POSSIBILITY OF SUCH DAMAGE.

jpeg-6b

If only executable code is distributed, then the accompanying documentation must state that "this software is based in part on the work of the Independent JPEG Group".

libpng

COPYRIGHT NOTICE, DISCLAIMER, and LICENSE:

If you modify libpng you may insert additional notices immediately following this sentence.

libpng version 1.2.6, December 3, 2004, is Copyright (c) 2004 Glenn Randers-Pehrson, and is distributed according to the same disclaimer and license as libpng-1.2.5 with the following individual added to the list of Contributing Authors

Cosmin Truta

libpng versions 1.0.7, July 1, 2000, through 1.2.5 - October 3, 2002, are Copyright (c) 2000-2002 Glenn Randers-Pehrson, and are distributed according to the same disclaimer and license as libpng-1.0.6 with the following individuals added to the list of Contributing Authors

Simon-Pierre Cadieux
Eric S. Raymond
Gilles Vollant

and with the following additions to the disclaimer:

There is no warranty against interference with your enjoyment of the library or against infringement. There is no warranty that our efforts or the library will fulfill any of your particular purposes or needs. This library is provided with all faults, and the entire risk of satisfactory quality, performance, accuracy, and effort is with the user.

libpng versions 0.97, January 1998, through 1.0.6, March 20, 2000, are Copyright (c) 1998, 1999 Glenn Randers-Pehrson, and are distributed according to the same disclaimer and license as libpng-0.96, with the following individuals added to the list of Contributing Authors:

Tom Lane
Glenn Randers-Pehrson
Willem van Schaik

libpng versions 0.89, June 1996, through 0.96, May 1997, are Copyright (c) 1996, 1997 Andreas Dilger
Distributed according to the same disclaimer and license as libpng-0.88, with the following individuals added to the list of Contributing Authors:

John Bowler
Kevin Bracey
Sam Bushell
Magnus Holmgren
Greg Roelofs
Tom Tanner

libpng versions 0.5, May 1995, through 0.88, January 1996, are Copyright (c) 1995, 1996 Guy Eric Schalnat, Group 42, Inc.

For the purposes of this copyright and license, "Contributing Authors" is defined as the following set of individuals:

Andreas Dilger
Dave Martindale
Guy Eric Schalnat
Paul Schmidt
Tim Wegner

The PNG Reference Library is supplied "AS IS". The Contributing Authors and Group 42, Inc. disclaim all warranties, expressed or implied, including, without limitation, the warranties of merchantability and of fitness for any purpose. The Contributing Authors and Group 42, Inc. assume no liability for direct, indirect, incidental, special, exemplary, or consequential damages, which may result from the use of the PNG Reference Library, even if advised of the possibility of such damage.

Permission is hereby granted to use, copy, modify, and distribute this source code, or portions hereof, for any purpose, without fee, subject to the following restrictions:

1. The origin of this source code must not be misrepresented.
2. Altered versions must be plainly marked as such and must not be misrepresented as being the original source.
3. This Copyright notice may not be removed or altered from any source or altered source distribution.

The Contributing Authors and Group 42, Inc. specifically permit, without fee, and encourage the use of this source code as a component to supporting the PNG file format in commercial products. If you use this source code in a product, acknowledgment is not required but would be appreciated.

A "png_get_copyright" function is available, for convenient use in "about" boxes and the like:

printf("%s",png_get_copyright(NULL));

Also, the PNG logo (in PNG format, of course) is supplied in the files "pngbar.png" and "pngbar.jpg (88x31) and "pngnow.png" (98x31).

Libpng is OSI Certified Open Source Software. OSI Certified Open Source is a certification mark of the Open Source Initiative.

Glenn Randers-Pehrson
glennrp at users.sourceforge.net
December 3, 2004

Libungif

The GIFLIB distribution is Copyright (c) 1997 Eric S. Raymond

THE SOFTWARE IS PROVIDED "AS IS", WITHOUT WARRANTY OF ANY KIND, EXPRESS OR IMPLIED, INCLUDING BUT NOT LIMITED TO THE WARRANTIES OF MERCHANTABILITY, FITNESS FOR A PARTICULAR PURPOSE AND NONINFRINGEMENT. IN NO EVENT SHALL THE AUTHORS OR COPYRIGHT HOLDERS BE LIABLE FOR ANY CLAIM, DAMAGES OR OTHER LIABILITY, WHETHER IN AN ACTION OF CONTRACT, TORT OR OTHERWISE, ARISING FROM, OUT OF OR IN CONNECTION WITH THE SOFTWARE OR THE USE OR OTHER DEALINGS IN THE SOFTWARE.

Luxi font

Bigelow & Holmes Inc and URW++ GmbH Luxi font license

Luxi fonts copyright (c) 2001 by Bigelow & Holmes Inc. Luxi font instruction code copyright (c) 2001 by URW++ GmbH. All Rights Reserved. Luxi is a registered trademark of Bigelow & Holmes Inc.

THE FONT SOFTWARE IS PROVIDED "AS IS", WITHOUT WARRANTY OF ANY KIND, EXPRESS OR IMPLIED, INCLUDING BUT NOT LIMITED TO ANY WARRANTIES OF MERCHANTABILITY, FITNESS FOR A PARTICULAR PURPOSE AND NONINFRINGEMENT OF COPYRIGHT, PATENT, TRADEMARK, OR OTHER RIGHT. IN NO EVENT SHALL BIGELOW & HOLMES INC. OR URW++ GMBH. BE LIABLE FOR ANY CLAIM, DAMAGES OR OTHER LIABILITY, INCLUDING ANY GENERAL, SPECIAL, INDIRECT, INCIDENTAL, OR CONSEQUENTIAL DAMAGES, WHETHER IN AN ACTION OF CONTRACT, TORT OR OTHERWISE, ARISING FROM, OUT OF THE USE OR INABILITY TO USE THE FONT SOFTWARE OR FROM OTHER DEALINGS IN THE FONT SOFTWARE.

TIFF

Copyright (c) 1988-1997 Sam Leffler
Copyright (c) 1991-1997 Silicon Graphics, Inc.

THE SOFTWARE IS PROVIDED "AS-IS" AND WITHOUT WARRANTY OF ANY KIND, EXPRESS, IMPLIED OR OTHERWISE, INCLUDING WITHOUT LIMITATION, ANY WARRANTY OF MERCHANTABILITY OR FITNESS FOR A PARTICULAR PURPOSE.

IN NO EVENT SHALL SAM LEFFLER OR SILICON GRAPHICS BE LIABLE FOR ANY SPECIAL, INCIDENTAL, INDIRECT OR CONSEQUENTIAL DAMAGES OF ANY KIND, OR ANY DAMAGES WHATSOEVER RESULTING FROM LOSS OF USE, DATA OR PROFITS, WHETHER OR NOT ADVISED OF THE POSSIBILITY OF DAMAGE, AND ON ANY THEORY OF LIABILITY, ARISING OUT OF OR IN CONNECTION WITH THE USE OR PERFORMANCE OF THIS SOFTWARE.

This software is based in part on zlib see http://www.zlib.net for information.

This software is based in part on Mozilla Public License 1.1 see http://www.mozilla.org/MPL/ for information.

This software is based in part on Apple Public Source License or the recipient's rights thereunder see http://developer.apple.com/ for information.

This software is based in part on Intel License see http://www.intel.com/ for information.

TinyLogin
This software is copyright 1988 - 1994, Julianne Frances Haugh. All rights reserved.

The shadow utilities license
This software is copyright 1988 - 1994, Julianne Frances Haugh. All rights reserved.

Vera.ttf/VeraMono.ttf
Copyright © 2003 by Bitstream, Inc. All Rights Reserved. Bitstream Vera SansBitstreamVeraSans-RomanRelease 1.10
Copyright © 2003 by Bitstream, Inc. All Rights Reserved. Bitstream Vera is a trademark of Bitstream, Inc.

Glossary

AACS
"Advanced Access Content System" is a specification for managing digital entertainment contents stored on the next generation of prerecorded and recorded optical media. The specification enables consumers to enjoy digital entertainment content, including high-definition content.

AVCHD ***(page 6)***
The AVCHD format is a high definition digital video camera format used to record SD (standard definition) or HD (high definition) signals of either the 1080i specification*1 or the 720p specification*2 on DVDs, using efficient data compression coding technology. The MPEG-4 AVC/H.264 format is adopted to compress video data, and the Dolby Digital or Linear PCM is used to compress audio data. The MPEG-4 AVC/H.264 format is capable of compressing images at higher efficiency than that of the conventional image compression format. The MPEG-4 AVC/ H.264 format enables a high definition (HD) video signal shot on a digital video camera recorder to be recorded on DVDs in the same way as for a standard definition (SD) television signal.
*1 A high definition specification that utilizes1080 effective scanning lines and the interlace format.
*2 A high definition specification that utilizes 720 effective scanning lines and the progressive format.

BD-J application
The BD-ROM format supports Java for interactive functions.
"BD-J" offers content providers almost unlimited functionality when creating interactive BD-ROM titles.

BD-R ***(page 5)***
BD-R (Blu-ray Disc Recordable) is a recordable, write-once Blu-ray Disc, available in the same capacities as the BD below. Since contents can be recorded and cannot be overwritten, a BD-R can be used to archive valuable data or storing and distributing video material.

BD-RE ***(page 5)***
BD-RE (Blu-ray Disc Rewritable) is a recordable and rewritable Blu-ray Disc, available in the same capacities as the BD below. The re-recordable feature makes extensive editing and time-shifting applications possible.

BD-ROM ***(page 5)***
BD-ROMs (Blu-ray Disc Read-Only Memory) are commercially produced discs and are available in the same capacities as the BD below. Other than conventional movie and video contents, these discs have enhanced features such as interactive content, menu operations using pop-up menus (see below), selection of subtitle display, and slideshow. Although a BD-ROM may contain any form of data, most BD ROM discs will contain movies in High Definition format, for playback on Blu-ray Disc players.

Blu-ray Disc (BD) ***(page 5)***
A disc format developed for recording/ playing high-definition (HD) video (for HDTV, etc.), and for storing large amounts of data. A single layer Blu-ray Disc holds up to 25 GB, and a dual-layer Blu-ray Disc holds up to 50 GB of data.

Chapter ***(page 25)***
Sections of a picture or a music feature that are smaller than titles. A title is composed of several chapters. Depending on the disc, no chapters may be recorded.

Dolby Digital ***(page 47)***
Digital audio compression technology developed by Dolby Laboratories. This technology conforms to multi-channel surround sound. The rear channel is stereo and there is a discrete subwoofer channel in this format. Dolby Digital provides the same discrete channels of high quality digital audio found in "Dolby Digital" theater surround sound systems. Good channel separation is realized because all of the channel data is recorded discretely and little deterioration occurs because all channel data processing is digital.

Dolby Digital Plus ***(page 48)***
Developed as an extension to Dolby Digital, the audio coding technology supports 7.1 multi-channel surround sound.

Dolby Surround (Pro Logic) ***(page 47)***
Audio signal processing technology that Dolby Laboratories developed for surround sound. When the input signal contains a surround component, the Pro Logic process outputs the front, center and rear signals. The rear channel is monaural.

Dolby TrueHD ***(page 48)***
Dolby TrueHD is a lossless coding technology that supports up to 8 channels of multi-channel surround sound for the next generation optical discs. The reproduced sound is true to the original source bit-for-bit.

DTS ***(page 47)***
Digital audio compression technology that DTS, Inc. developed. This technology conforms to multi-channel surround sound. The rear channel is stereo and there is a discrete subwoofer channel in this format. DTS provides the same discrete channels of high quality digital audio.
Good channel separation is realized because all of the channel data is recorded discretely and little deterioration occurs because all channel data processing is digital.

DTS-HD ***(page 48)***
DTS-HD is an extended format of the Coherent Acoustics audio coding system, which also encompasses DTS Digital Surround, DTS-ES, and DTS 96/ 24. DTS-HD is highly flexible in supporting the number of discrete surround sound channels. While 7.1ch surround sound is planned for Blu-ray Discs, the audio signals can be downmixed to 5.1 or 2 channels for backward compatibility, and the reproduced audio quality can either be at the bit rate of DTS Digital Surround or the lossless mode.

DVD VIDEO ***(page 5)***
A disc format that contains up to eight hours of moving pictures on a disc the same diameter as a CD. A single-layer single sided DVD holds up to 4.7 GB; a double layer single-sided DVD, 8.5 GB; a single layer double-sided DVD, 9.4 GB; double-layer double-sided DVD, 17 GB. The MPEG 2 format is adopted for the efficient video data compression. The variable rate coding technology that changes the data to be allocated according to the status of the picture is adopted for reproducing high-quality pictures. Audio information is recorded in a multi-channel format, such as Dolby Digital, allowing for a realistic audio presence.

DVD-R ***(page 5)***
A DVD-R is a recordable disc that is the same size as a DVD VIDEO. Contents can be recorded only once to a DVD-R, and will have the same format as a DVD VIDEO. The DVD-R has two different modes: VR mode and Video mode. DVDs created in Video mode have the same format as a DVD VIDEO, while discs created in VR (Video Recording) mode allow the contents to be programmed or edited.

DVD-RW ***(page 5)***
A DVD-RW is a recordable and rewritable disc that is the same size as a DVD VIDEO. The DVD-RW has two different modes: VR mode and Video mode. DVDs created in Video mode have the same format as a DVD VIDEO, while discs created in VR (Video Recording) mode allow the contents to be programmed or edited.

DVD+R ***(page 5)***
A DVD+R (read "plus R") is a recordable disc that is the same size as a DVD VIDEO. Contents can be recorded only once to a DVD+R, and will have the same format as a DVD VIDEO.

DVD+RW ***(page 5)***
A DVD+RW (read "plus RW") is a recordable and rewritable disc. DVD+RWs use a recording format that is comparable to the DVD VIDEO format.

Film-based software, Video-based software
DVDs can be classified as Film-based or Video-based software. Film-based DVDs contain the same images (24 frames per second) that are shown at movie theaters. Video-based DVDs, such as television dramas or sitcoms, display images at 30 frames (or 60 fields) per second.

HDMI (High-Definition Multimedia Interface) ***(page 8)***
HDMI is an interface that supports both video and audio on a single digital connection. The HDMI connection carries standard to high definition video signals and multi-channel audio signals to AV components such as HDMI equipped TVs, in digital form without degradation.
The HDMI specification supports HDCP (High-bandwidth Digital Contents Protection), a copy protection technology for digital entertainment contents for HDMI.

Interlace format
Interlace format shows every other line of an image as a single "field" and is the standard method for displaying images on television. The even number field shows the even numbered lines of an image, and the odd numbered field shows the odd numbered lines of an image.

MPEG-2
One of the video data compression schemes established by the Moving Picture Experts Group (MPEG), which is adopted for DVD VIDEOs and digital broadcasts worldwide. The scheme specifies MPEG-2 PS (Program Stream) for recordable media such as a DVD VIDEO, and MPEG-2 TS (Transport Stream) for digital broadcasts and other communications.

Pop-up menu
An enhanced menu operation available on BD-ROMs. The pop-up menu appears when MENU is pressed during playback, and can be operated while playback is in progress.

Progressive format
Compared to the Interlace format that alternately shows every other line of an image (field) to create one frame, the Progressive format shows the entire image at once as a single frame. This means that while the Interlace format can show 30 frames/60 fields in one second, the Progressive format can show 60 frames in one second. The overall picture quality increases and still images, text, and horizontal lines appear sharper.

Title ***(page 26)***
The longest section of a picture or music feature on a DVD, movie, etc., in video software, or the entire album in audio software.

x.v.Color ***(page 8)***
x.v.Color is a more familiar term for the xvYCC standard proposed by Sony, and is a trademark of Sony.
xvYCC is an international standard for color space in video.
This standard can express a wider color range than the currently used broadcast standard.

Language Code List

For details, *see page 49*.

Language (abbr.)	Code
Japanese (ja)	1001
English (en)	0514
French (fr)	0618
German (de)	0405
Italian (it)	0920
Spanish (es)	0519
Dutch (nl)	1412
Russian (ru)	1821
Chinese (zh)	2608
Korean (ko)	1115
Greek (el)	0512
Afar (aa)	0101
Abkhazian (ab)	0102
Afrikaans (af)	0106
Amharic (am)	0113
Arabic (ar)	0118
Assamese (as)	0119
Aymara (ay)	0125
Azerbaijani (az)	0126
Bashkir (ba)	0201
Byelorussian (be)	0205
Bulgarian (bg)	0207
Bihari (bh)	0208
Bislama (bi)	0209
Bengali (bn)	0214
Tibetan (bo)	0215
Breton (br)	0218
Catalan (ca)	0301
Corsican (co)	0315
Czech (cs)	0319
Welsh (cy)	0325
Danish (da)	0401
Bhutani (dz)	0426
Esperanto (eo)	0515
Estonian (et)	0520
Basque (eu)	0521
Persian (fa)	0601
Finnish (fi)	0609
Fiji (fj)	0610
Faroese (fo)	0615
Frisian (fy)	0625
Irish (ga)	0701
Scots-Gaelic (gd)	0704
Galician (gl)	0712
Guarani (gn)	0714
Gujarati (gu)	0721
Hausa (ha)	0801

Language (abbr.)	Code
Hindi (hi)	0809
Croatian (hr)	0818
Hungarian (hu)	0821
Armenian (hy)	0825
Interlingua (ia)	0901
Interlingue (ie)	0905
Inupiak (ik)	0911
Indonesian (in)	0914
Icelandic (is)	0919
Hebrew (iw)	0923
Yiddish (ji)	1009
Javanese (jw)	1023
Georgian (ka)	1101
Kazakh (kk)	1111
Greenlandic (kl)	1112
Cambodian (km)	1113
Kannada (kn)	1114
Kashmiri (ks)	1119
Kurdish (ku)	1121
Kirghiz (ky)	1125
Latin (la)	1201
Lingala (ln)	1214
Laothian (lo)	1215
Lithuanian (lt)	1220
Latvian (lv)	1222
Malagasy (mg)	1307
Maori (mi)	1309
Macedonian (mk)	1311
Malayalam (ml)	1312
Mongolian (mn)	1314
Moldavian (mo)	1315
Marathi (mr)	1318
Malay (ms)	1319
Maltese (mt)	1320
Burmese (my)	1325
Nauru (na)	1401
Nepali (ne)	1405
Norwegian (no)	1415
Occitan (oc)	1503
Oromo (om)	1513
Oriya (or)	1518
Panjabi (pa)	1601
Polish (pl)	1612
Pashto, Pushto (ps)	1619
Portuguese (pt)	1620
Quechua (qu)	1721
Rhaeto-Romance (rm)	1813
Kirundi (rn)	1814
Romanian (ro)	1815
Kinyarwanda (rw)	1823
Sanskrit (sa)	1901
Sindhi (sd)	1904
Sangho (sg)	1907
Serbo-Croatian (sh)	1908

Language (abbr.)	Code
Sinhalese (si)	1909
Slovak (sk)	1911
Slovenian (sl)	1912
Samoan (sm)	1913
Shona (sn)	1914
Somali (so)	1915
Albanian (sq)	1917
Serbian (sr)	1918
Siswati (ss)	1919
Sesotho (st)	1920
Sundanese (su)	1921
Swedish (sv)	1922
Swahili (sw)	1923
Tamil (ta)	2001
Telugu (te)	2005
Tajik (tg)	2007
Thai (th)	2008
Tigrinya (ti)	2009
Turkmen (tk)	2011
Tagalog (tl)	2012
Setswana (tn)	2014
Tonga (to)	2015
Turkish (tr)	2018
Tsonga (ts)	2019
Tatar (tt)	2020
Twi (tw)	2023
Ukrainian (uk)	2111
Urdu (ur)	2118
Uzbek (uz)	2126
Vietnamese (vi)	2209
Volapük (vo)	2215
Wolof (wo)	2315
Xhosa (xh)	2408
Yoruba (yo)	2515
Zulu (zu)	2621

Parental Control Country/Area Code List

For details, *see page 50*.

Area (abbr.)	Code
Argentina (ar)	0118
Australia (au)	0121
Austria (at)	0120
Belgium (be)	0205
Brazil (br)	0218
Canada (ca)	0301
Chile (cl)	0312
China (cn)	0314
Denmark (dk)	0411
Finland (fi)	0609
France (fr)	0618
Germany (de)	0405
Hong Kong (hk)	0811
India (in)	0914
Indonesia (id)	0904
Italy (it)	0920
Japan (jp)	1016
Korea, Republic of (kr)	1118
Malaysia (my)	1325
Mexico (mx)	1324
Netherlands (nl)	1412
New Zealand (nz)	1426
Norway (no)	1415
Pakistan (pk)	1611
Philippines (ph)	1608
Portugal (pt)	1620
Russian Federation (ru)	1821
Singapore (sg)	1907
Spain (es)	0519
Switzerland (ch)	0308
Sweden (se)	1905
Taiwan (tw)	2023
Thailand (th)	2008
United Kingdom (gb)	0702
United States of America (us)	2119

Index

Words in quotations appear in the on-screen displays.

Numerics
5.1CH OUTPUT 14, 51

A
“A/V Control” 22
AACS 66
ANGLE 24
AUDIO 24
“Audio Control” 27
“Audio Output Mode” 51
“Audio Setup” 47
AVCHD 6, 66

B
Batteries 16
BD-R 5, 66
BD-RE 5, 66
Blu-ray Disc 5, 66
‘BRAVIA’ Theatre Sync 11

C
CD 5
Chapter 25, 66
Color buttons 24
Connecting
  the audio cords 12
  the video cords 10

D
DIMMER 24
Disc Information 26
DISPLAY 24
Display
  front panel display 59
Dolby Digital 14, 47, 66
Dolby Digital Plus 48, 66
Dolby TrueHD 48, 66
DTS 47, 66
“DTS Downmix” 47
DTS-HD 48, 66
DVD VIDEO 5, 66
DVD+R 5, 67
DVD+RW 5, 67
DVD-R 5, 67
DVD-RW 5, 67

E
Easy Setup 18

F
Film based software 67
Front panel display 59

H
HDMI 11, 12, 18, 45, 47, 67
HDMI Control 11, 21, 52

I
Interlace format 67

L
“Language” 49

M
“Memory” 28
“Movies” 32
MPEG 32
“Music” 36

O
“Options” 52

P
“Parental Control” 50
“Photos” 40
POP UP/MENU 25
Pro Logic 14, 47, 66
Progressive format 67

R
Region code 7
Remote 16, 17, 24
Resetting the Player 53

S
Searching 26, 34, 38, 42
“Setup” 22
Setup Displays 44
“Slideshow” 41
“Speaker Setup” 51
“Speakers” 12, 51
SUBTITLE 24

T
Title 26, 67
Title List 22
TOP MENU 25
Troubleshooting 54
“TV Type” 45

U
Usable discs 5

V
Video based software 67
“Video Control” 28
“Video Setup” 45

X
x.v.Color 8, 67

MEMO

SECTION 2
DISASSEMBLY

• This set can be disassembled in the order shown below.

2-1. DISASSEMBLY FLOW

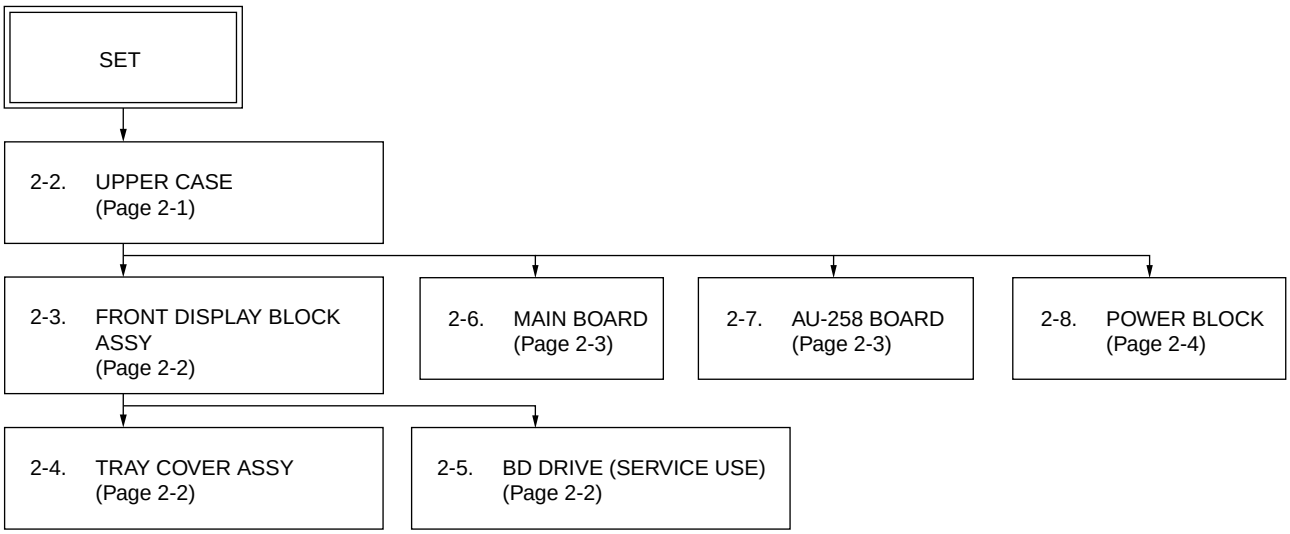

Note: Follow the disassembly procedure in the numerical order given.

2-2. UPPER CASE

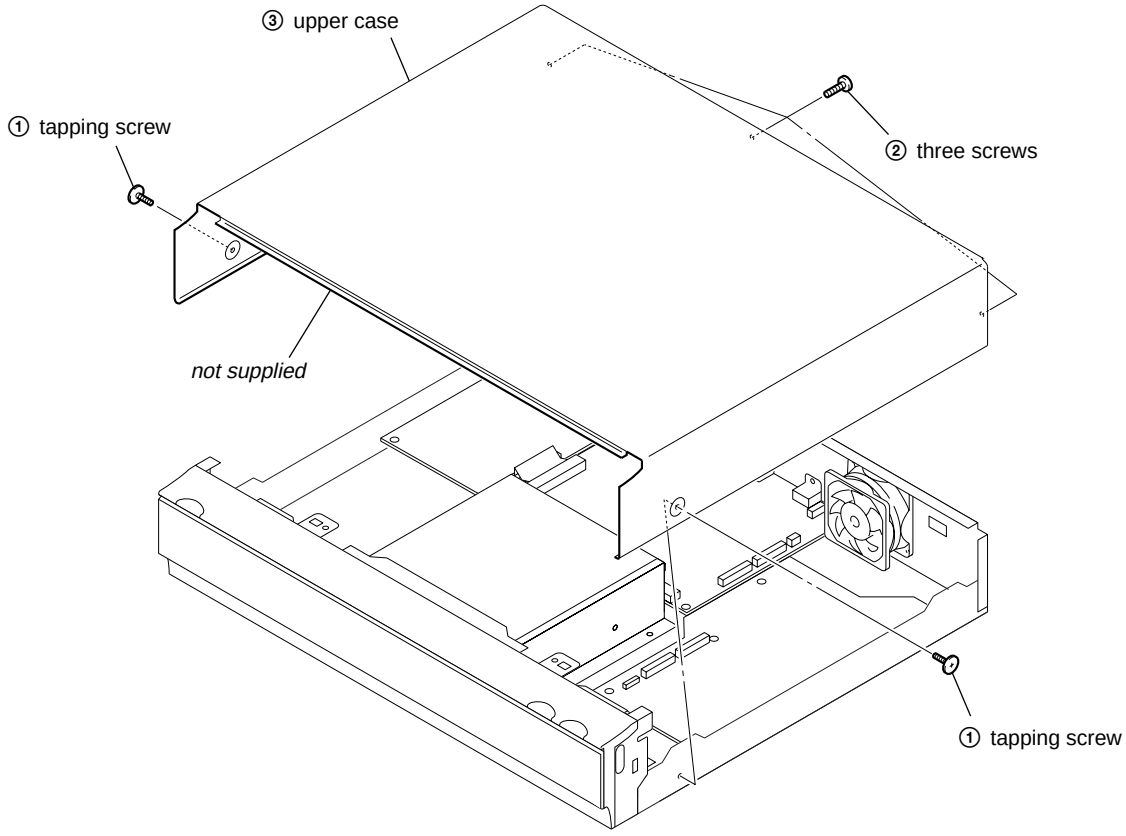

2-3. FRONT DISPLAY BLOCK ASSY

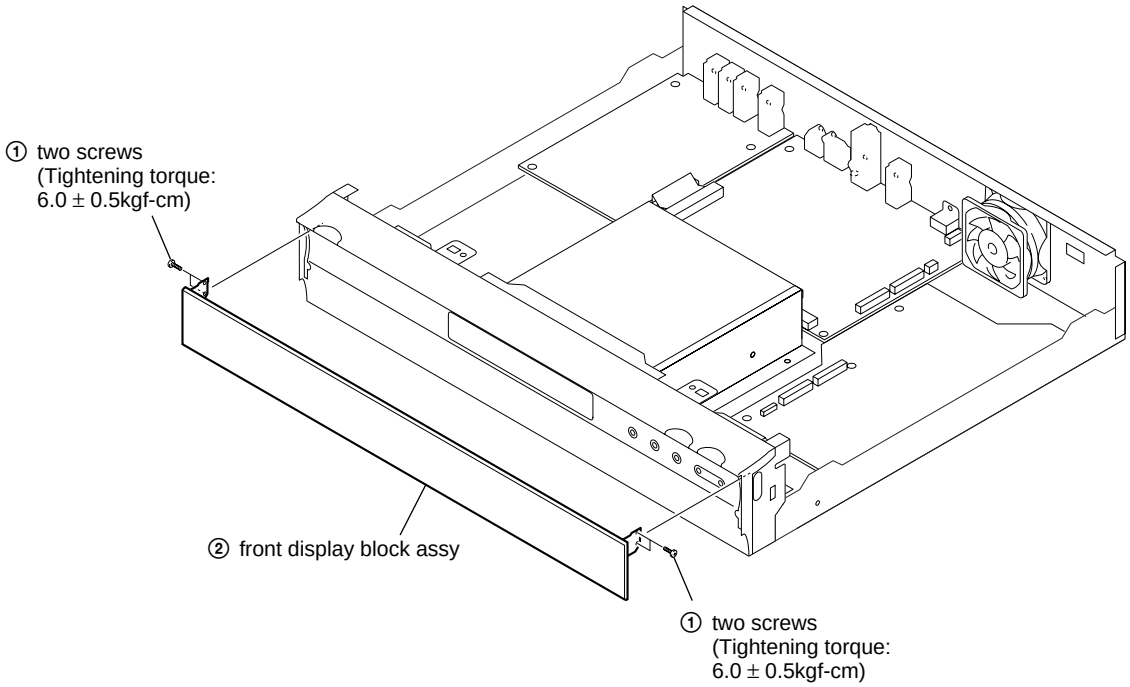

2-4. TRAY COVER ASSY

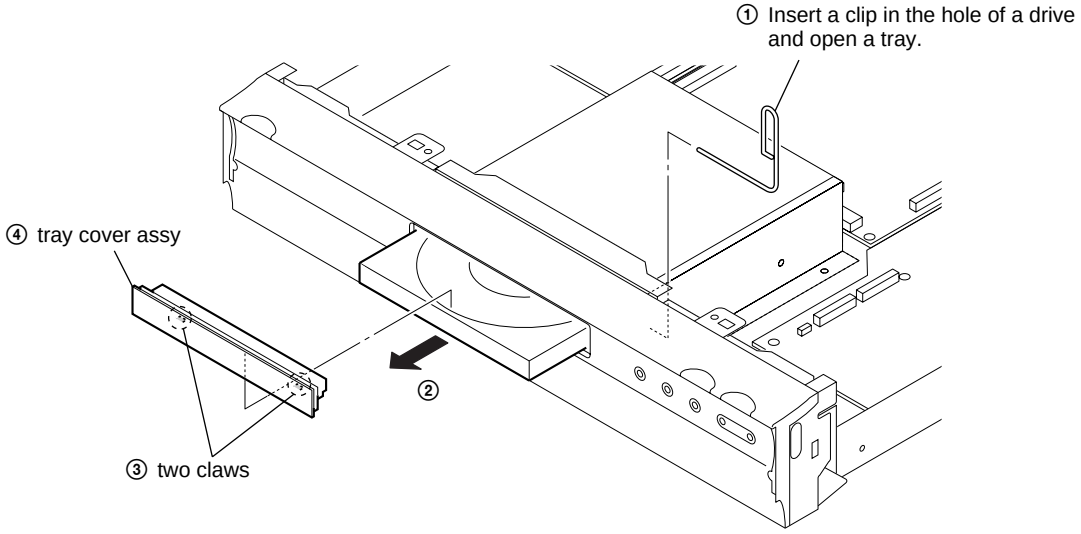

2-5. BD DRIVE (SERVICE USE)

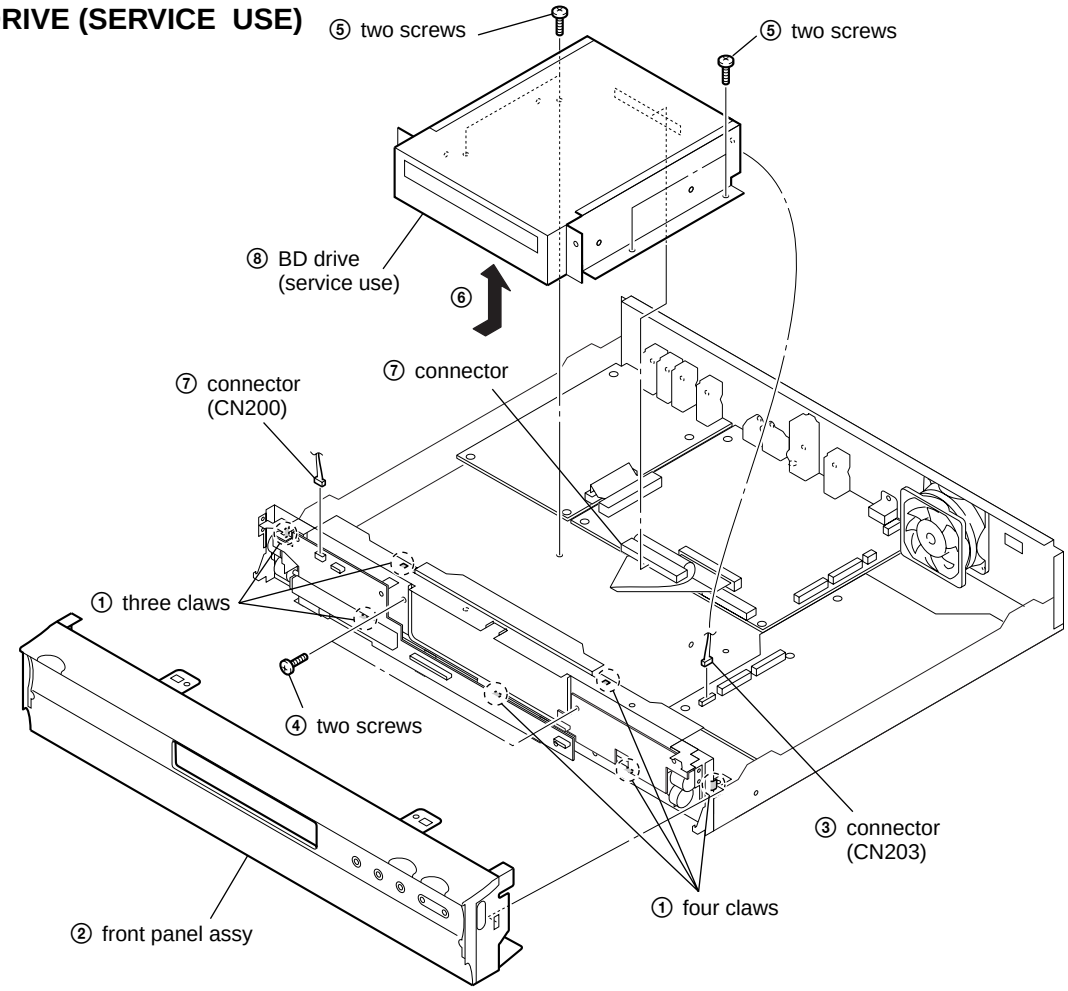

2-6. MAIN BOARD

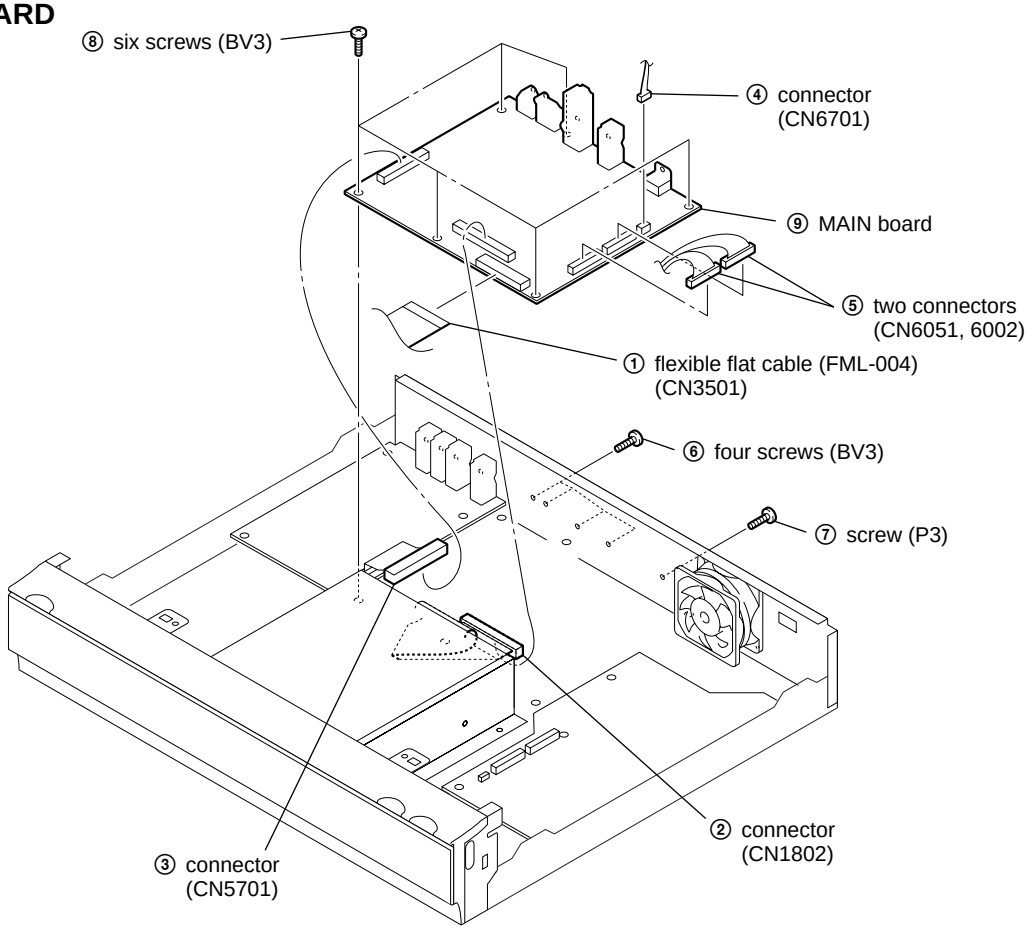

2-7. AU-258 BOARD

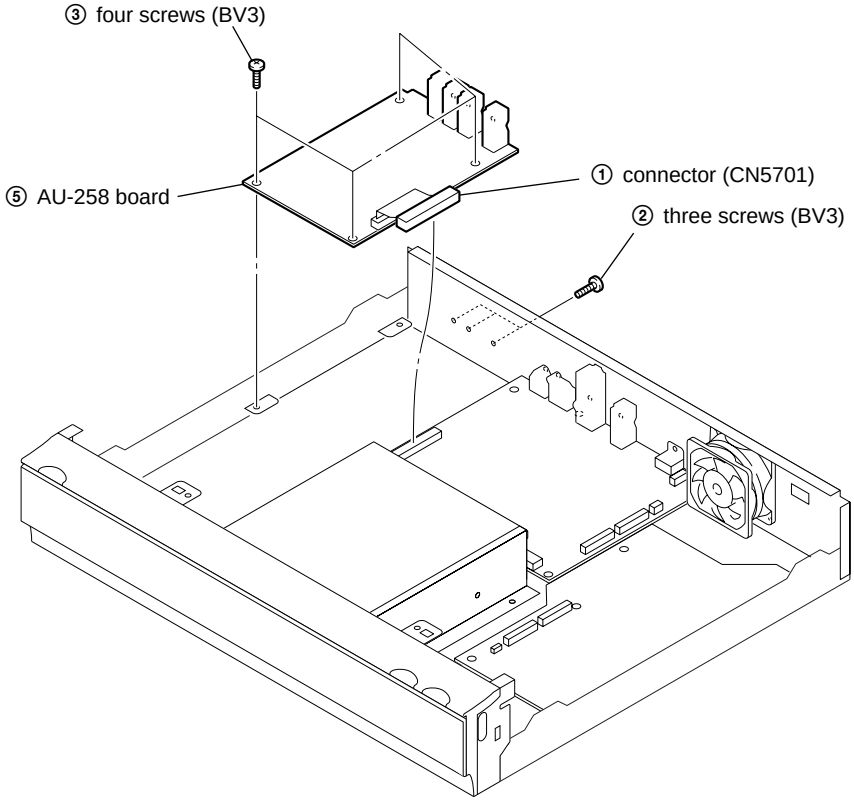

2-8. POWER BLOCK

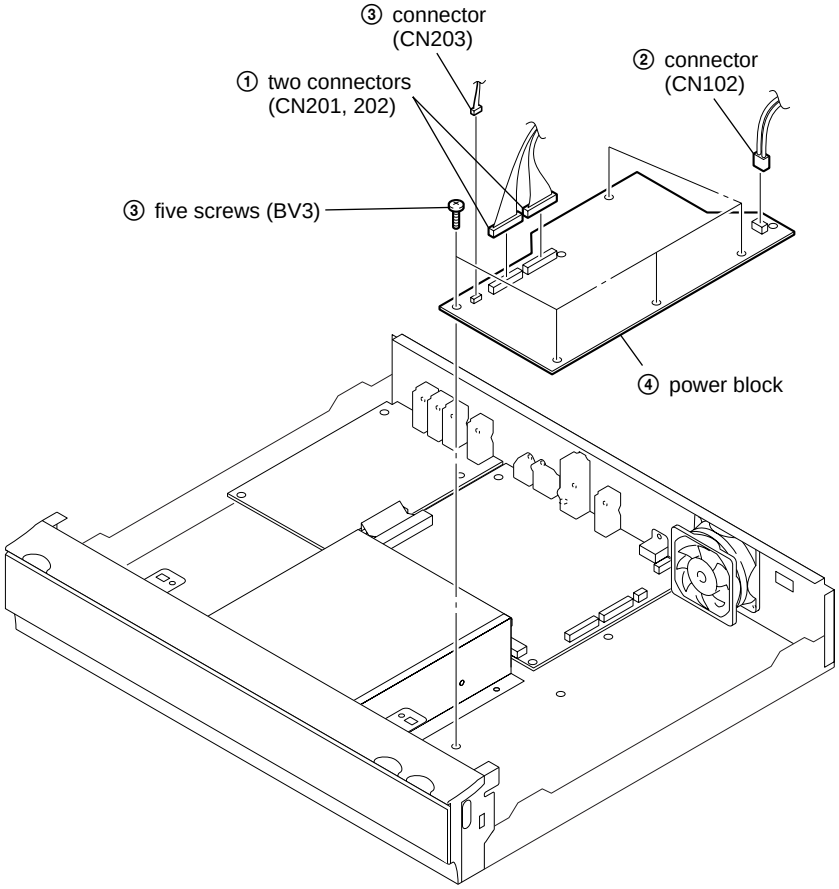

2-9. CIRCUIT BOARDS LOCATION

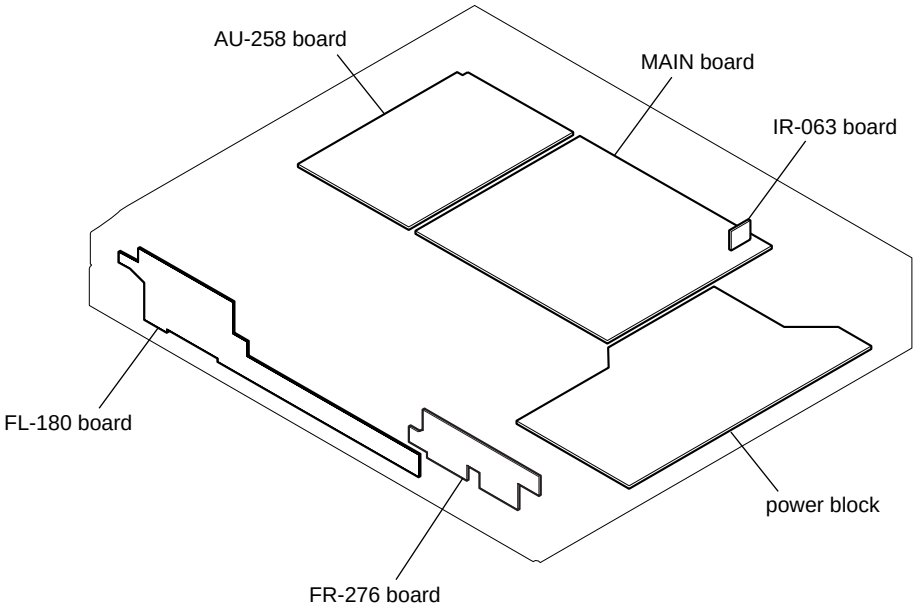

MEMO

SECTION 3
BLOCK DIAGRAMS

3-1. MAIN BLOCK DIAGRAM

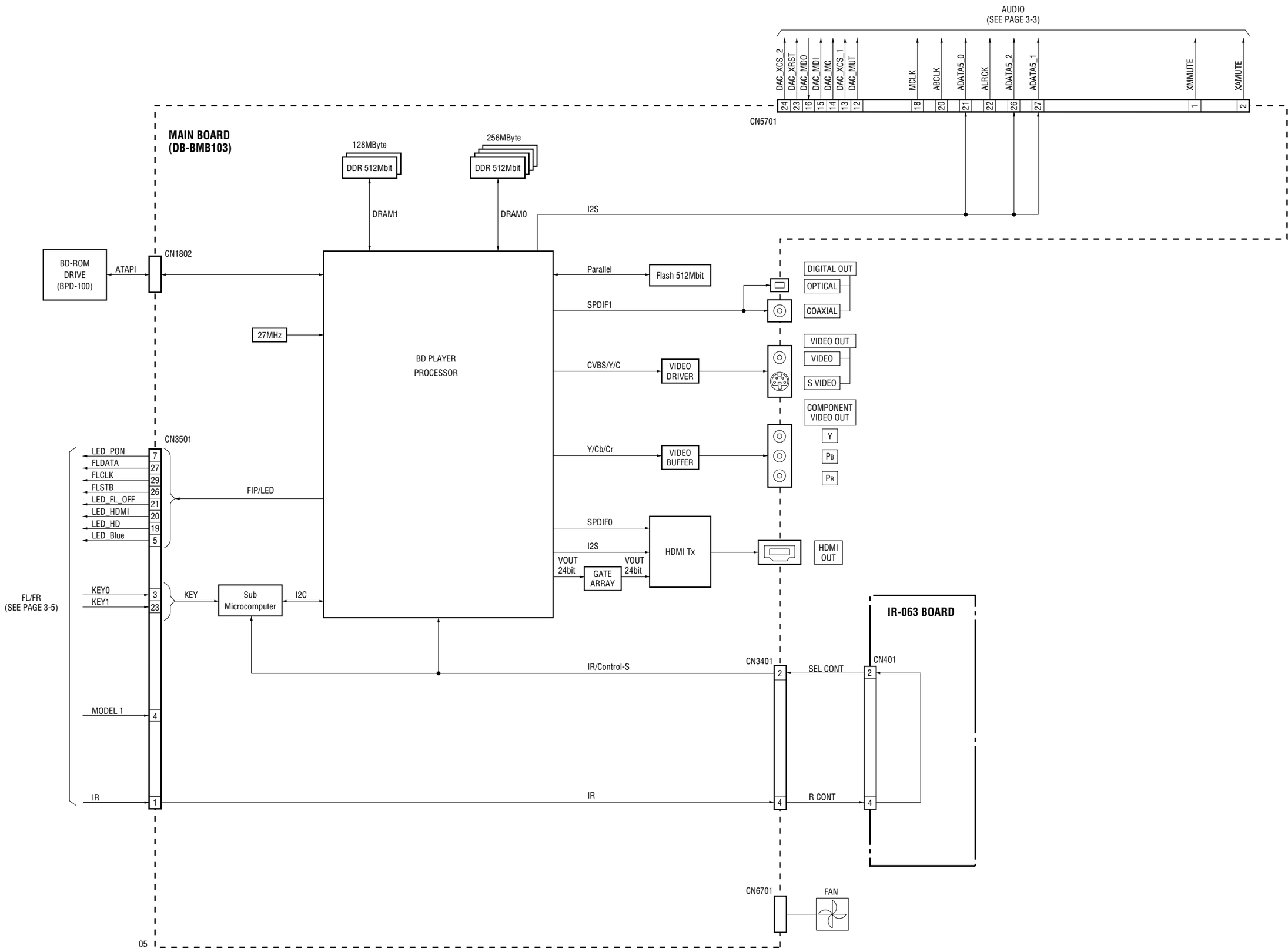

3-2. AUDIO BLOCK DIAGRAM

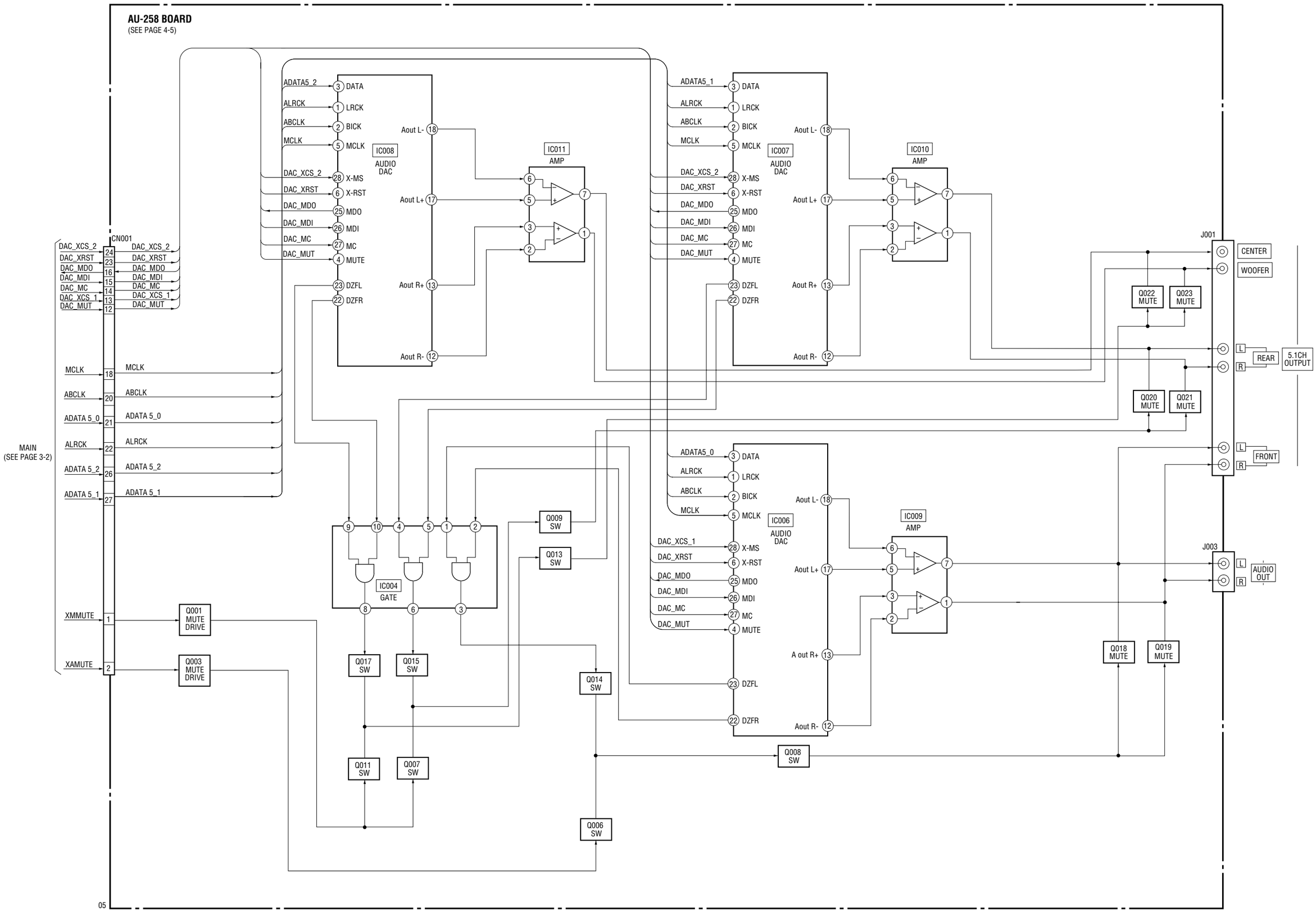

3-3. FL/FR BLOCK DIAGRAM

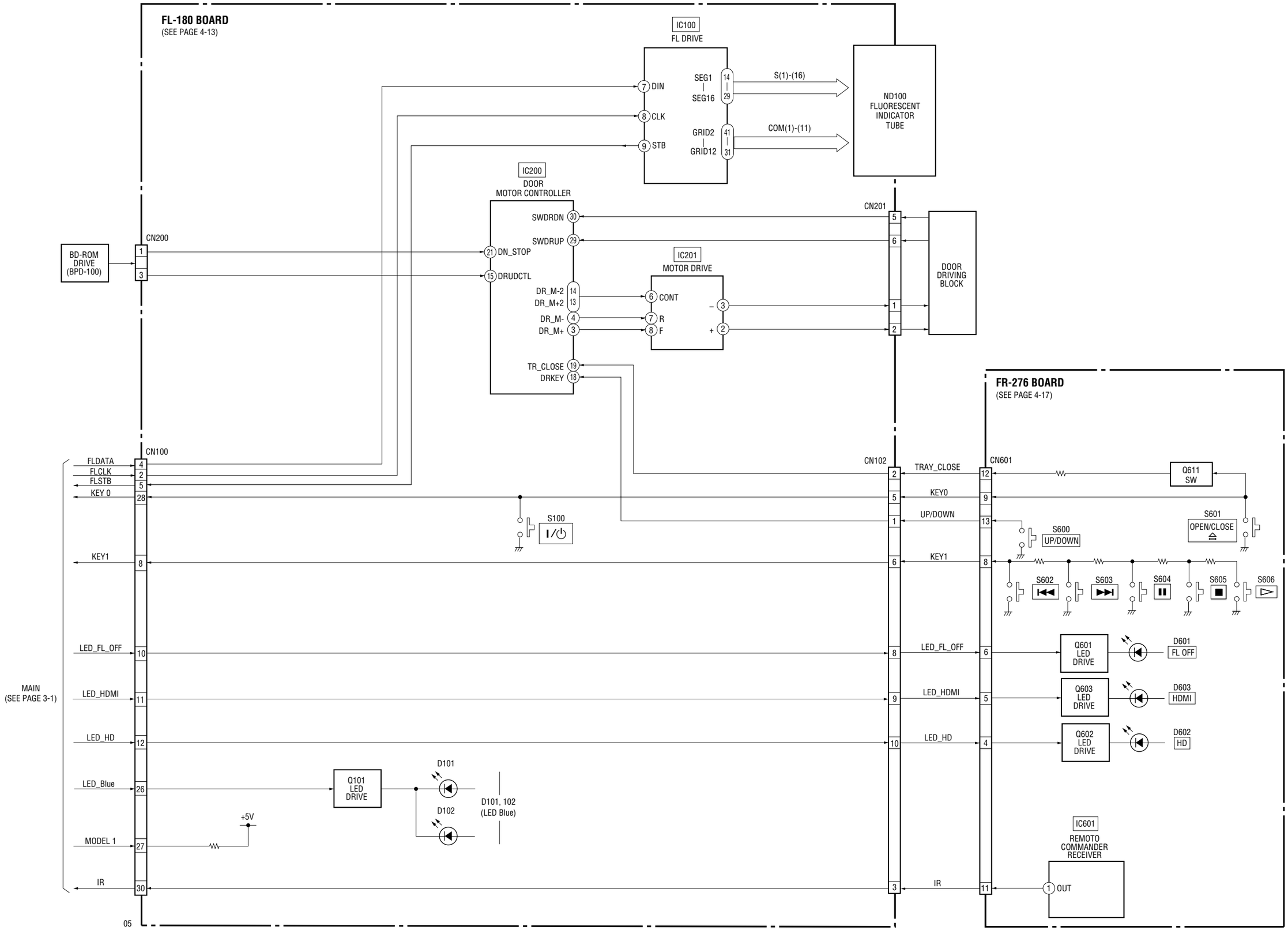

3-4. POWER 1 BLOCK DIAGRAM

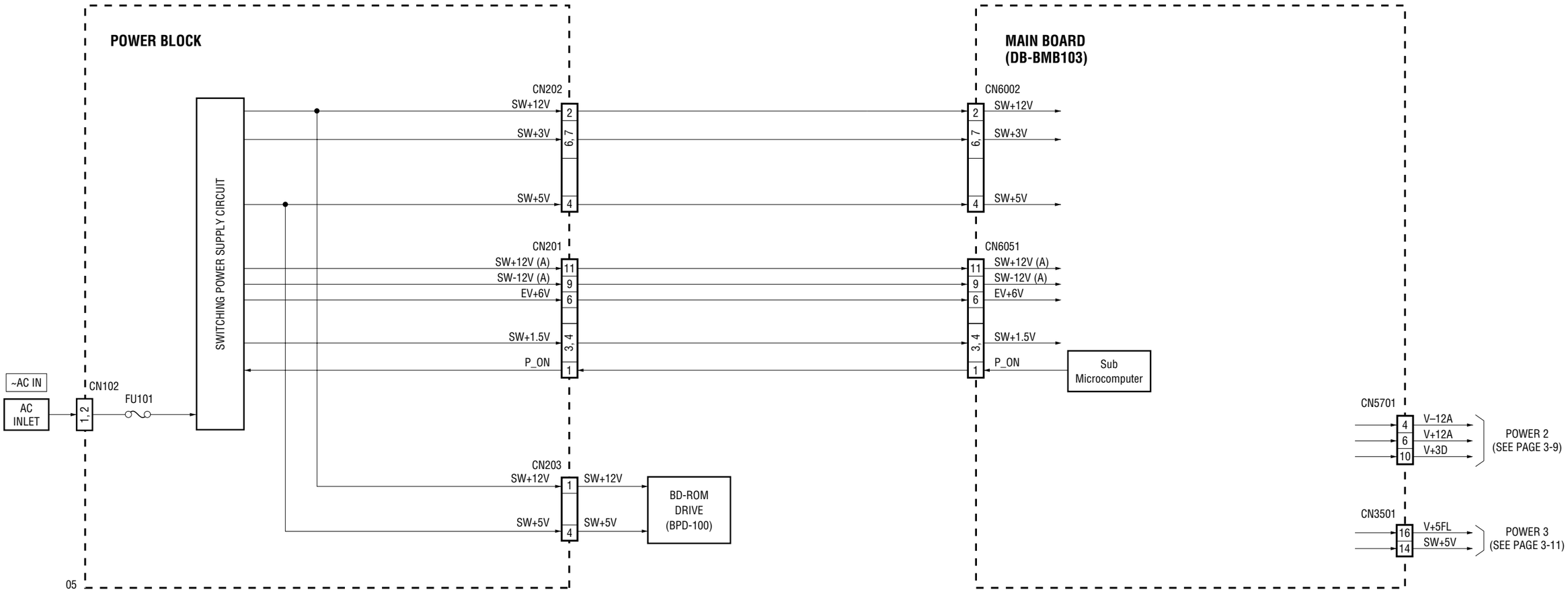

3-5. POWER 2 BLOCK DIAGRAM

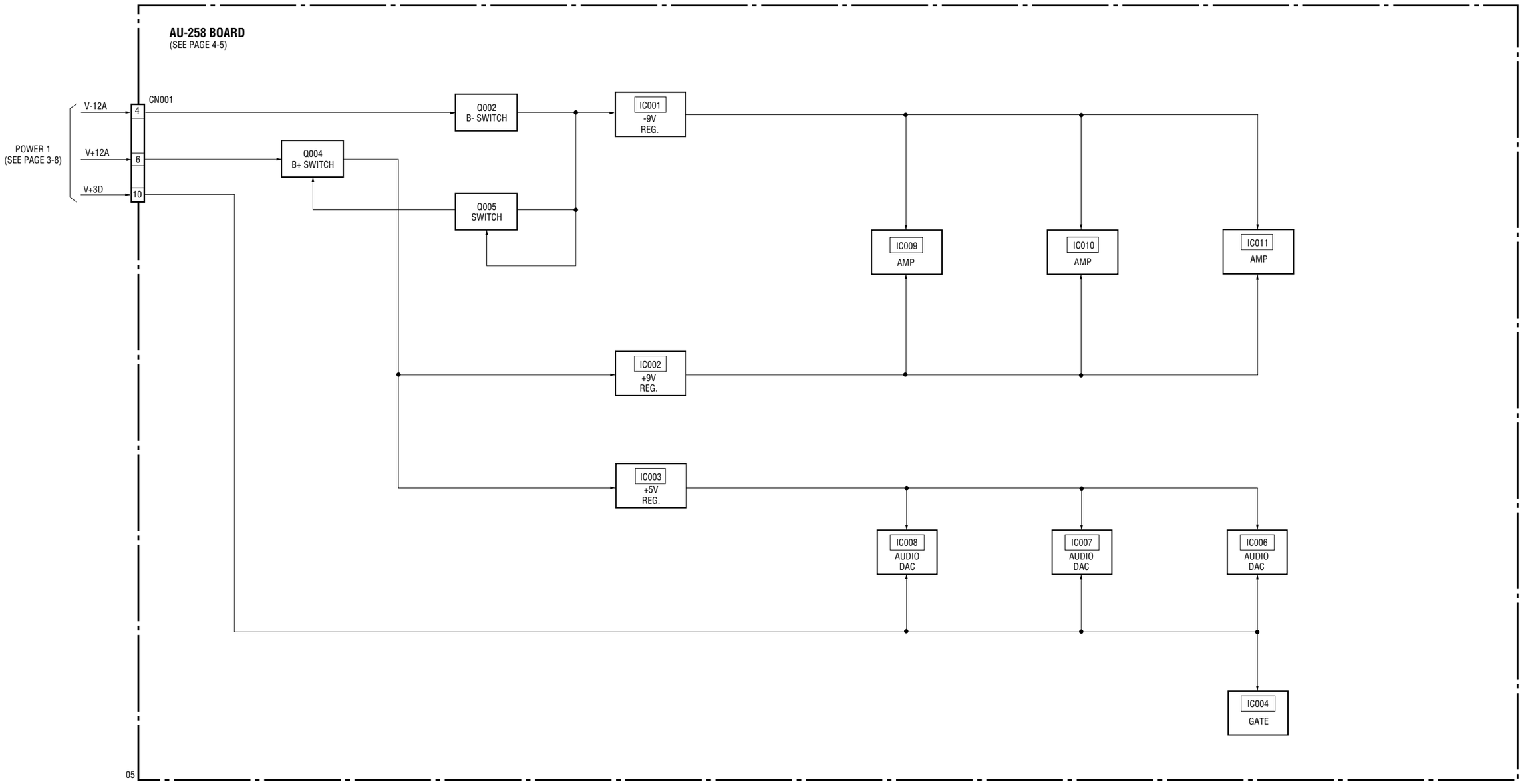

3-6. POWER 3 BLOCK DIAGRAM

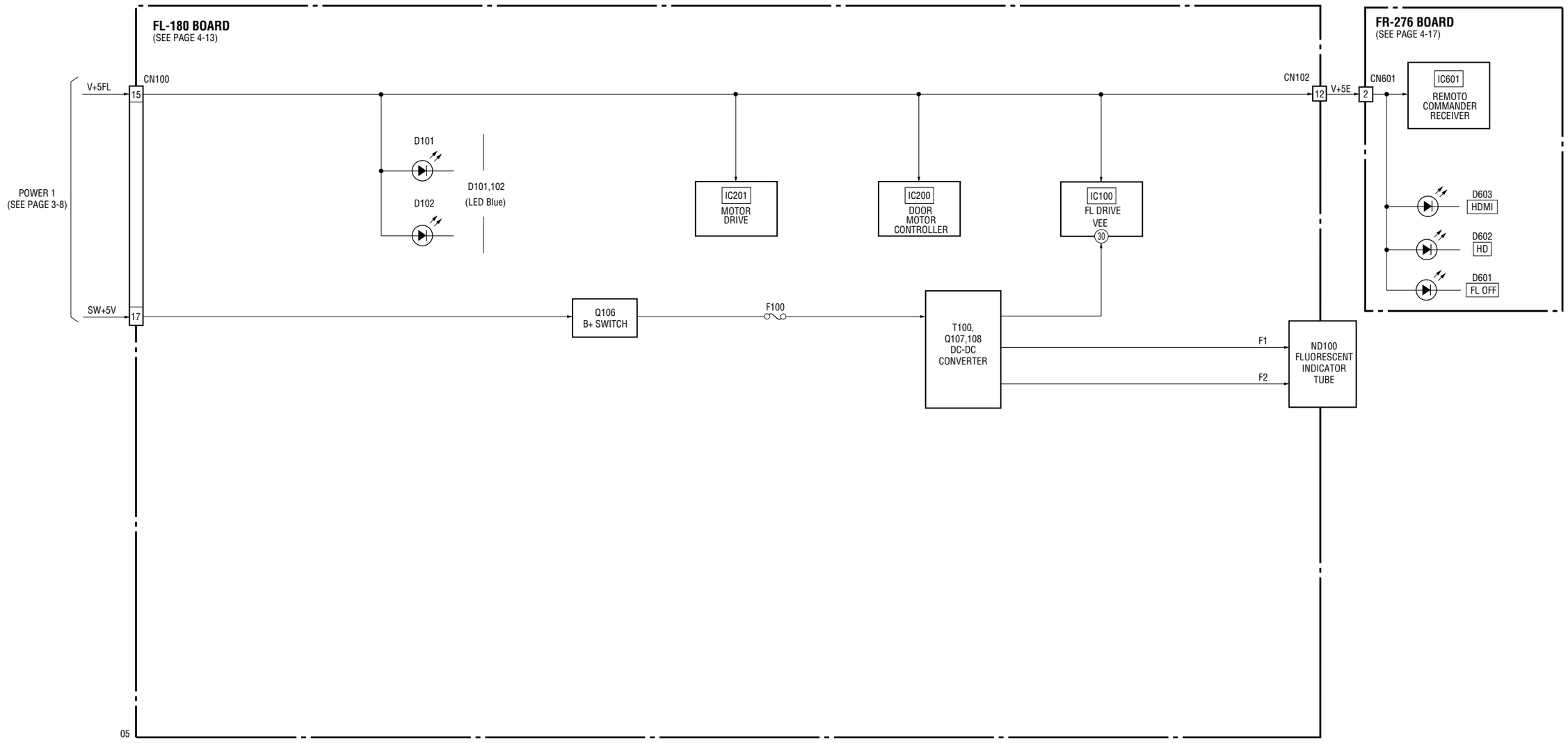

SECTION 4
SCHEMATIC DIAGRAMS AND PRINTED WIRING BOARDS

4-1. FRAME SCHEMATIC DIAGRAM

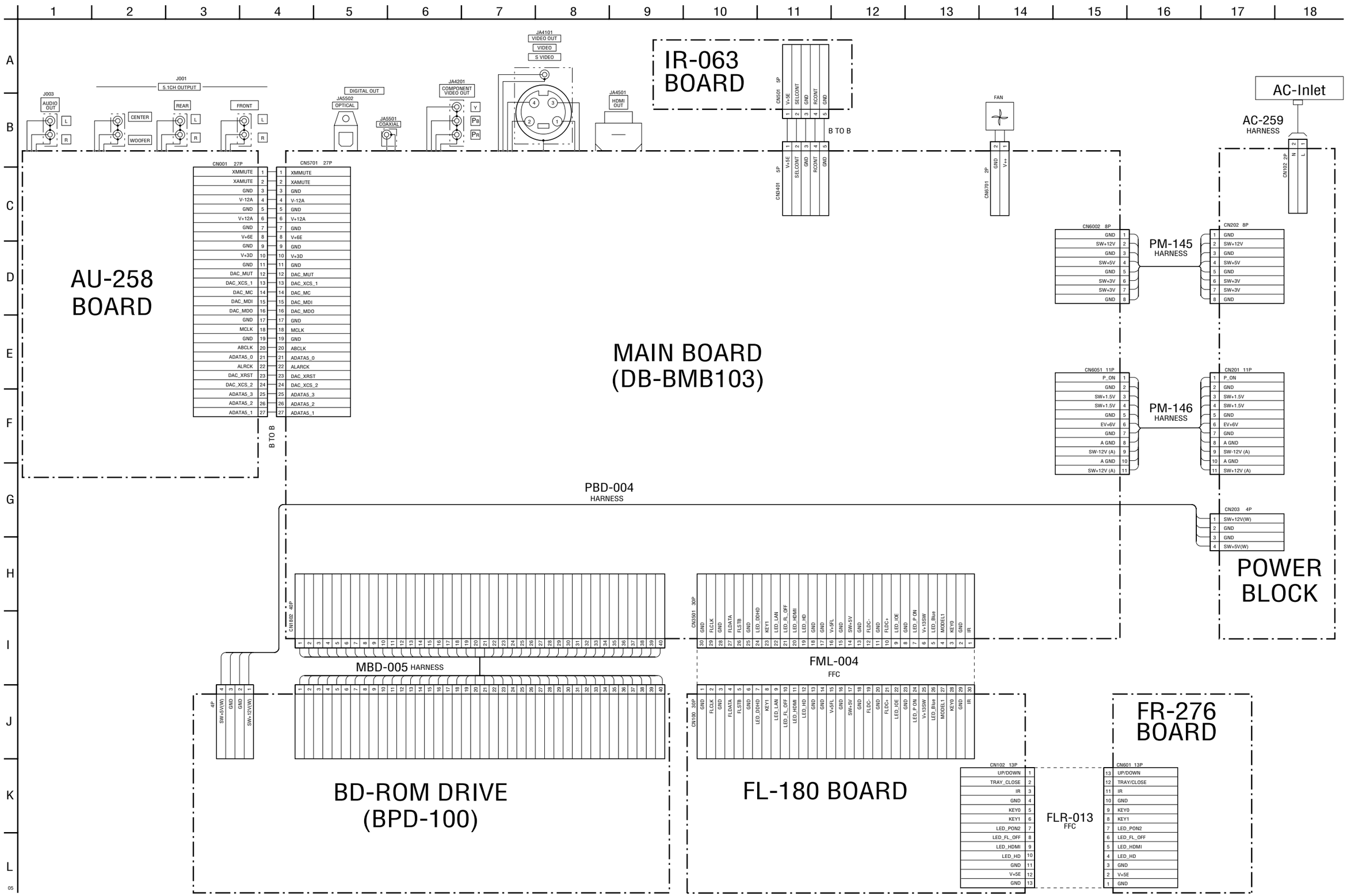

THIS NOTE IS COMMON FOR WIRING BOARDS AND SCHEMATIC DIAGRAMS
(In addition to this, the necessary note is printed in each block)

(For printed wiring boards)

- ▒▒▒: Pattern from the side which enables seeing.
  (The other layers' patterns are not indicated)
- Through hole is omitted.
- Circled numbers refer to waveforms.
- There are few cases that the part printed on diagram isn't mounted in this model.
- Chip parts.

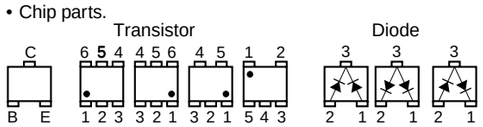

(For schematic diagrams)

- All capacitors are in µF unless otherwise noted. pF : µµF. 50V or less are not indicated except for electrolytics and tantalums.
- All resistors are in ohms, 1/4 W (Chip resistors : 1 /10 W) un-less otherwise specified.
  kΩ=1000Ω, MΩ=1000kΩ.
- Caution when replacing chip parts.
  New parts must be attached after removal of chip.
  Be careful not to heat the minus side of tantalum capacitor, be-cause it is damaged by the heat.
- All variable and adjustable resistors have characteristic curve B, unless otherwise noted.
- : nonflammable resistor
- : fusible resistor
- : panel designation
- △ : internal component.
- : adjustment for repair.
- B + : B+ Line
- B − : B– Line
- Circled numbers refer to waveforms.
- Voltages are dc between measurement point.
- Readings are taken with a color-bar signals on Blu-ray disc.
- Readings are taken with a digital multimeter (DC 10MΩ).
- Voltage variations may be noted due to normal production tolerances.

Note:	**Note:**
The components identified by mark ⚠ or dotted line with mark ⚠ are critical for safety. Replace only with part number specified.	Les composants identifiés par une marque ⚠ sont critiques pour la sécurité. Ne les remplacer que par une pièce portant le numéro spécifié.

When indicating parts by reference number, please include the board name.

NOTE

AU-258 (ANALOG AUDIO) SCHEMATIC DIAGRAM • See page 4-7 for printed wiring board.

– Ref. No. : AU-258 board; 1,000 series –

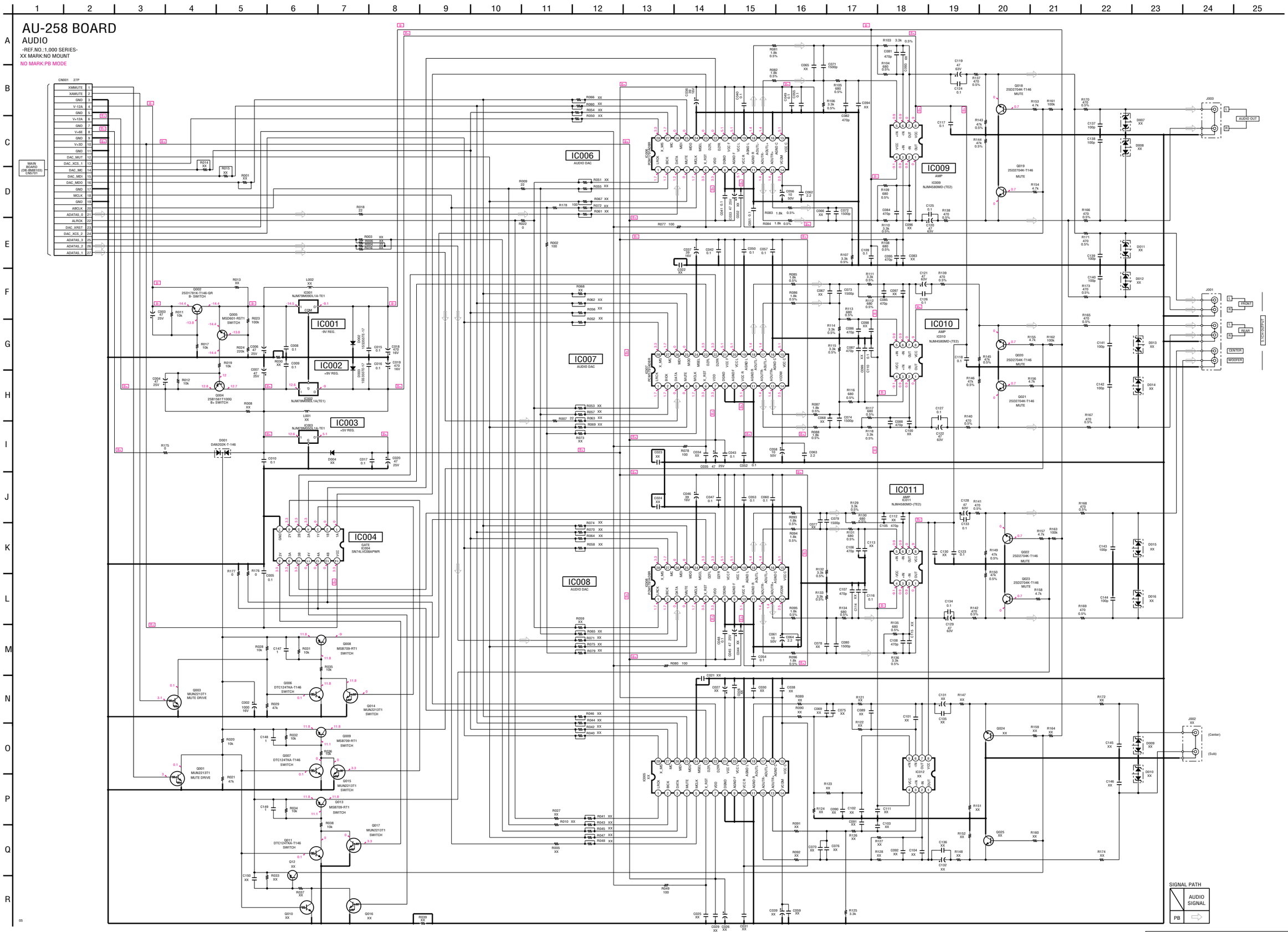

ANALOG AUDIO
AU-258

AU-258 BOARD (SIDE A)

IC004 H-11
IC006 C-7
IC007 D-7
IC008 F-7

Q006 G-11
Q007 G-11
Q008 I-11
Q009 I-11
Q011 G-12
Q013 H-12

AU-258 (ANALOG AUDIO) PRINTED WIRING BOARD

– Ref. No. : AU-258 board; 1,000 series –

: Uses unleaded solder. • See page 2-5 for circuit boards location.

There are a few cases that the part isn't mounted in this model is printed on this diagram.

AU-258 BOARD (SIDE A)

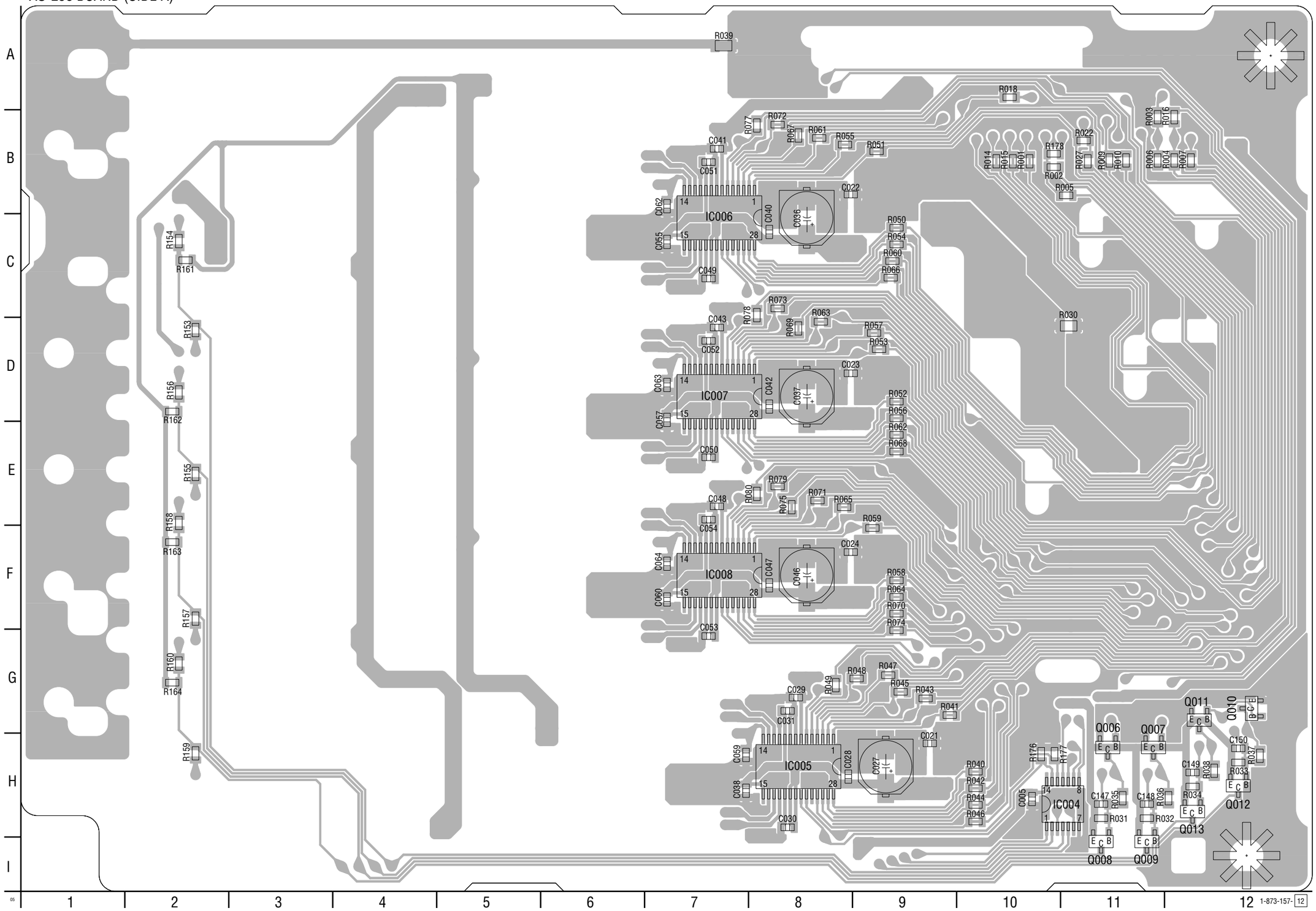

AU-258 BOARD (SIDE B)

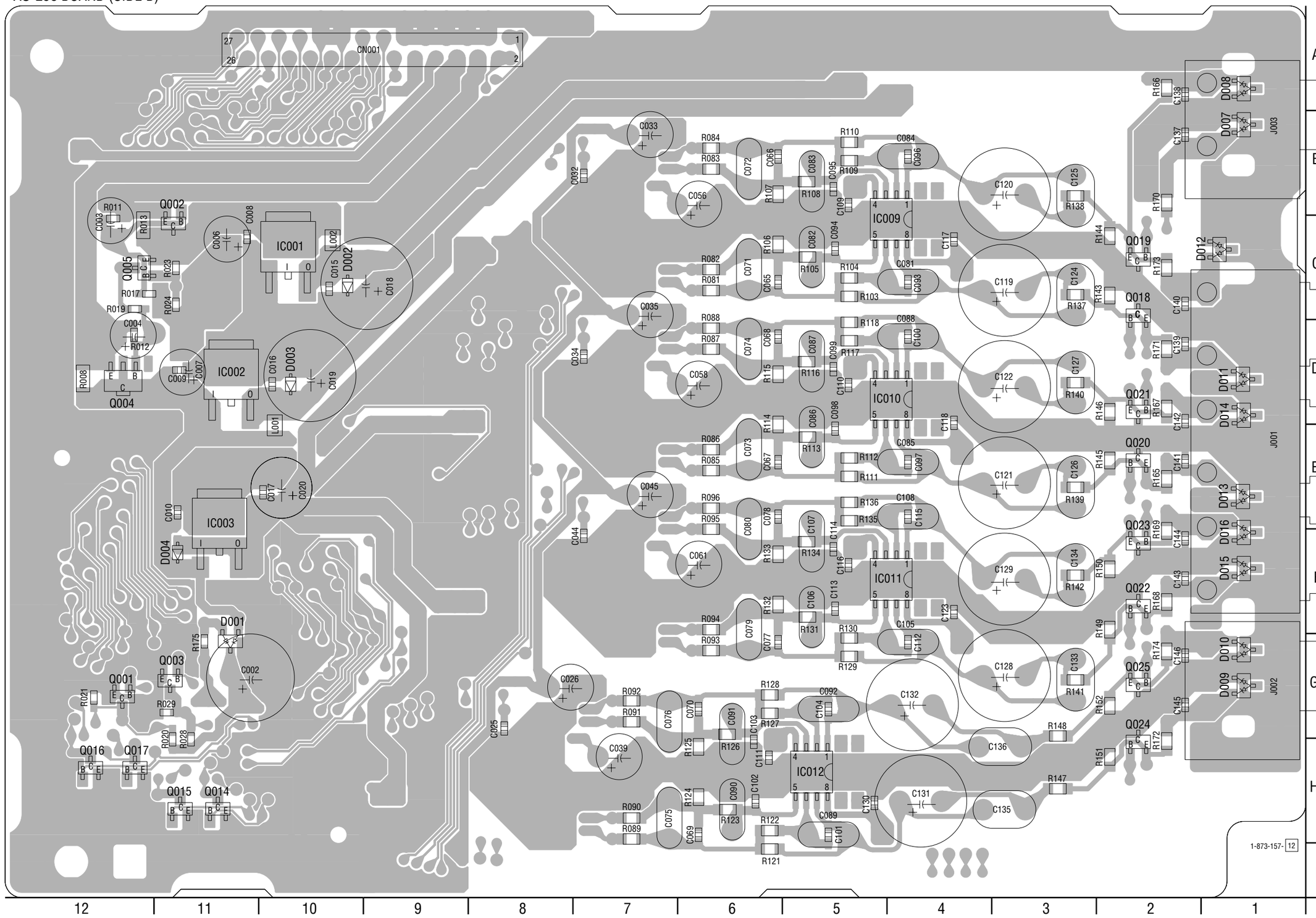

AU-258 BOARD (SIDE B)

D001	G-11
D002	C-10
D003	D-10
IC001	C-10
IC002	D-11
IC003	E-11
IC009	B-4
IC010	D-4
IC011	F-4
Q001	G-12
Q002	B-11
Q003	G-11
Q004	D-12
Q005	C-12
Q014	H-11
Q015	H-11
Q017	H-12
Q018	C-2
Q019	C-2
Q020	E-2
Q021	D-2
Q022	F-2
Q023	F-2

FL-180 (1/2) (INDICATOR DRIVE) SCHEMATIC DIAGRAM • **See page 4-15 for printed wiring board.**

– Ref. No. : FL-180 board; 2,000 series –

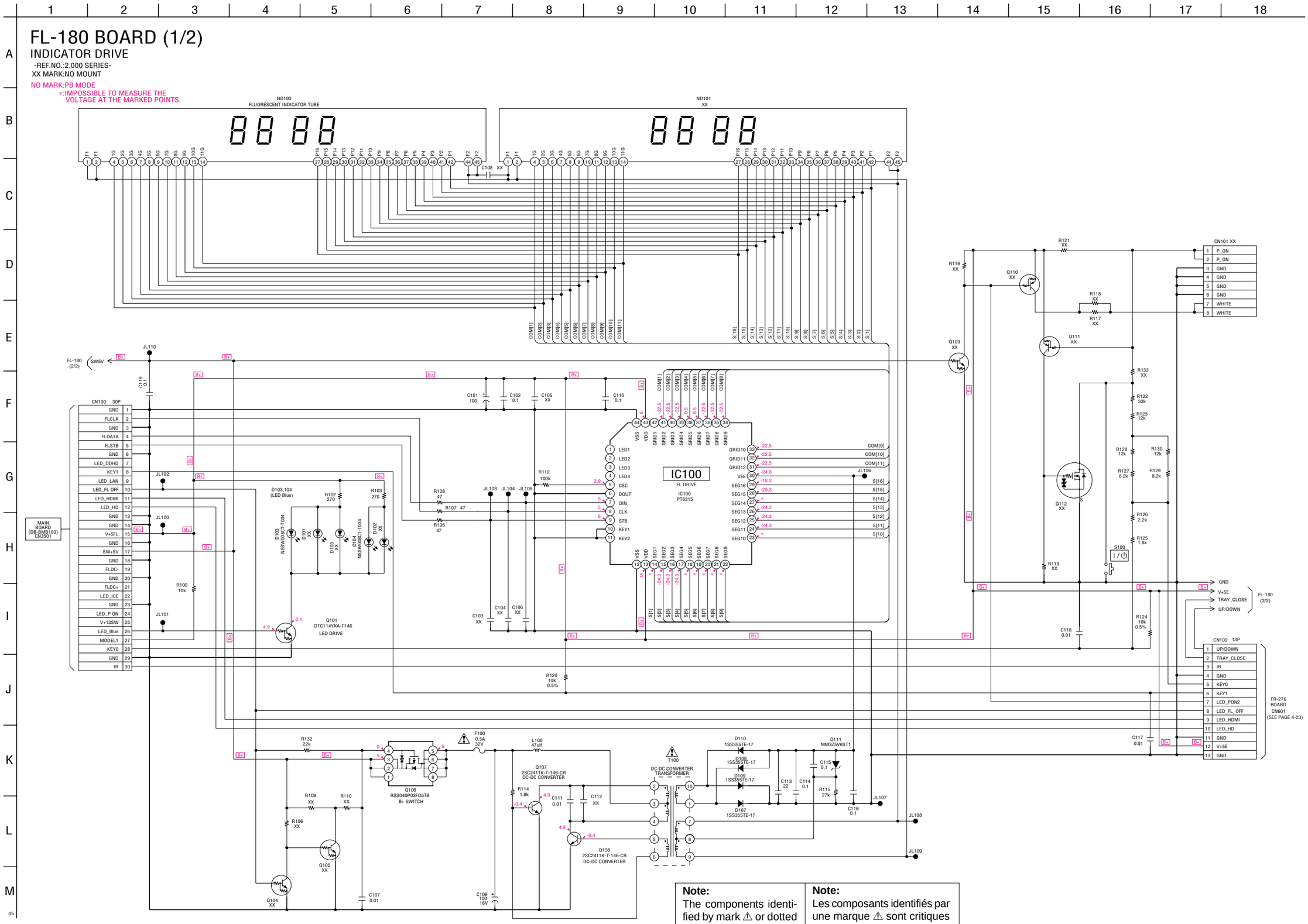

Note:	Note:
The components identified by mark ⚠ or dotted line with mark ⚠ are critical for safety. Replace only with part number specified.	Les composants identifiés par une marque ⚠ sont critiques pour la sécurité. Ne les remplacer que par une pièce portant le numéro spécifié.

INDICATOR DRIVE
FL-180 (1/2)

FL-180 (2/2) (DOOR DRIVE) SCHEMATIC DIAGRAM **• See page 4-15 for printed wiring board.**

– Ref. No. : FL-180 board; 2,000 series –

FL-180 BOARD (2/2)

DOOR DRIVE

-REF.NO.:2,000 SERIES-
XX MARK:NO MOUNT
NO MARK:PB MODE

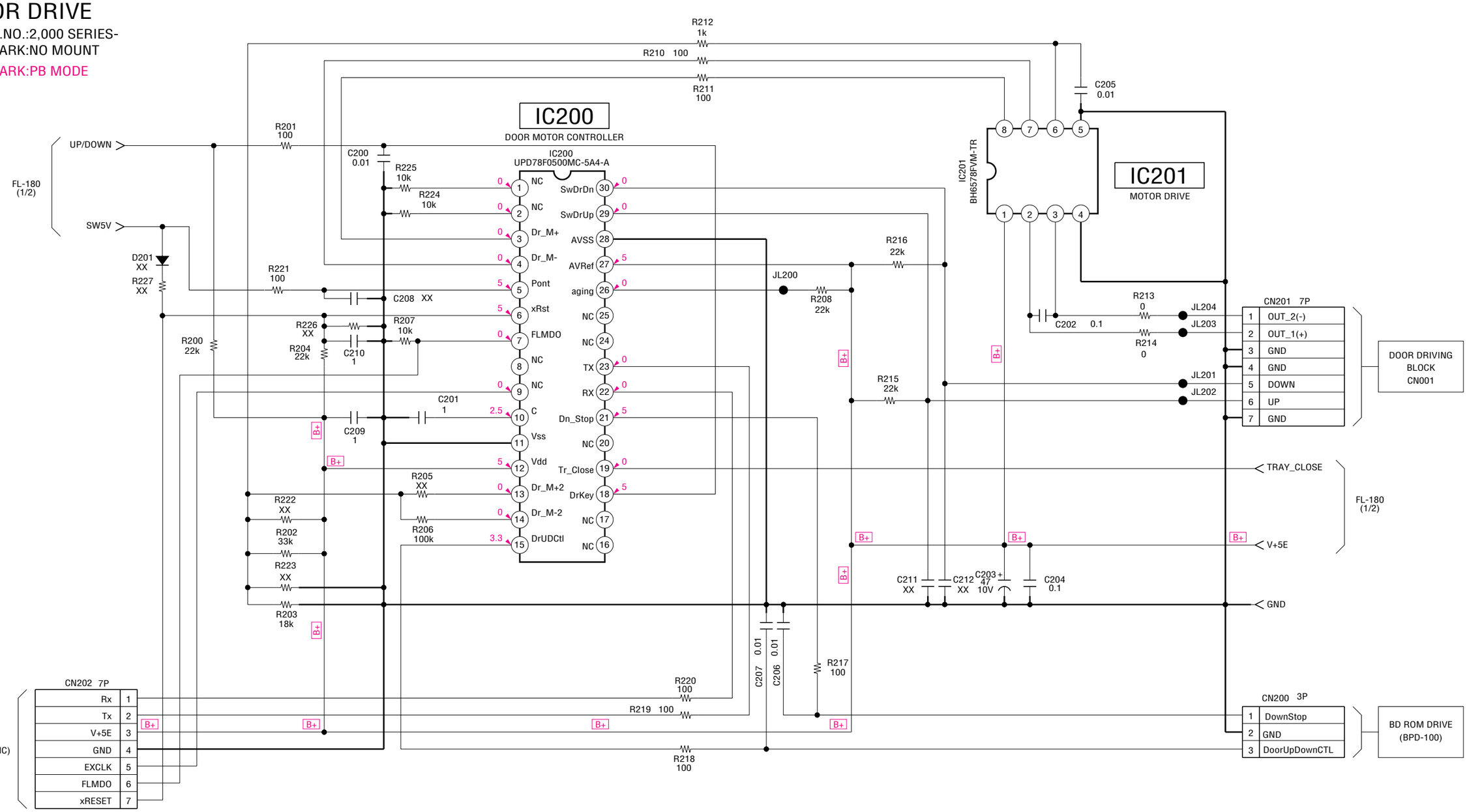

FL-180 (INDICATOR DRIVE, DOOR DRIVE) PRINTED WIRING BOARD

– Ref. No. : FL-180 board; 2,000 series –

: Uses unleaded solder. • See page 2-5 for circuit boards location.

There are a few cases that the part isn't mounted in this model is printed on this diagram.

FL-180 BOARD (SIDE A)

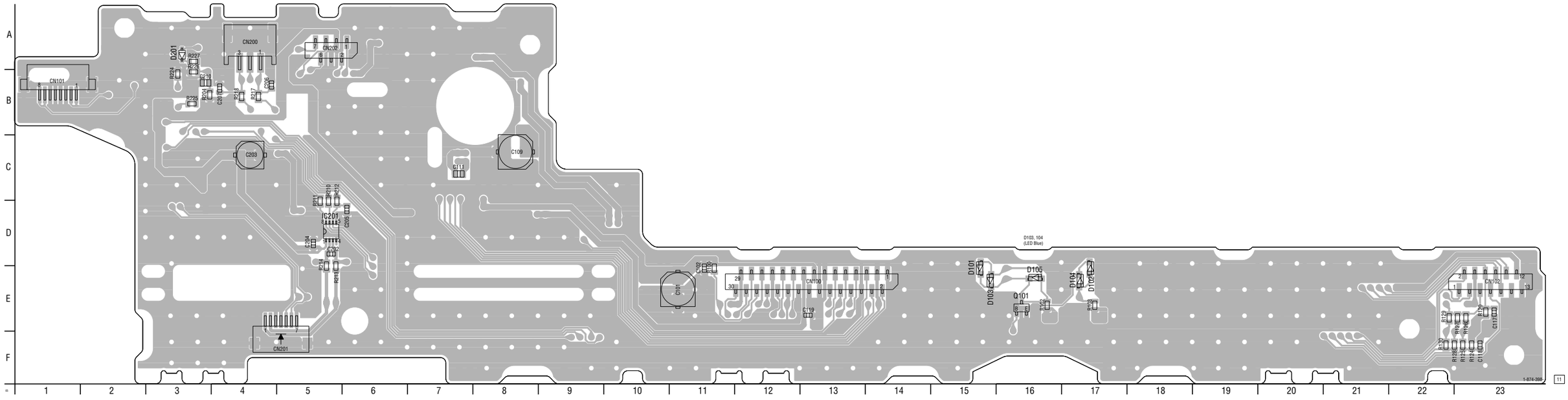

FL-180 BOARD

CN100	E-13
CN102	E-23
CN200	A-4
CN201	F-5
CN202	A-5
D103	E-15
D104	E-17
IC201	D-5
Q101	E-16

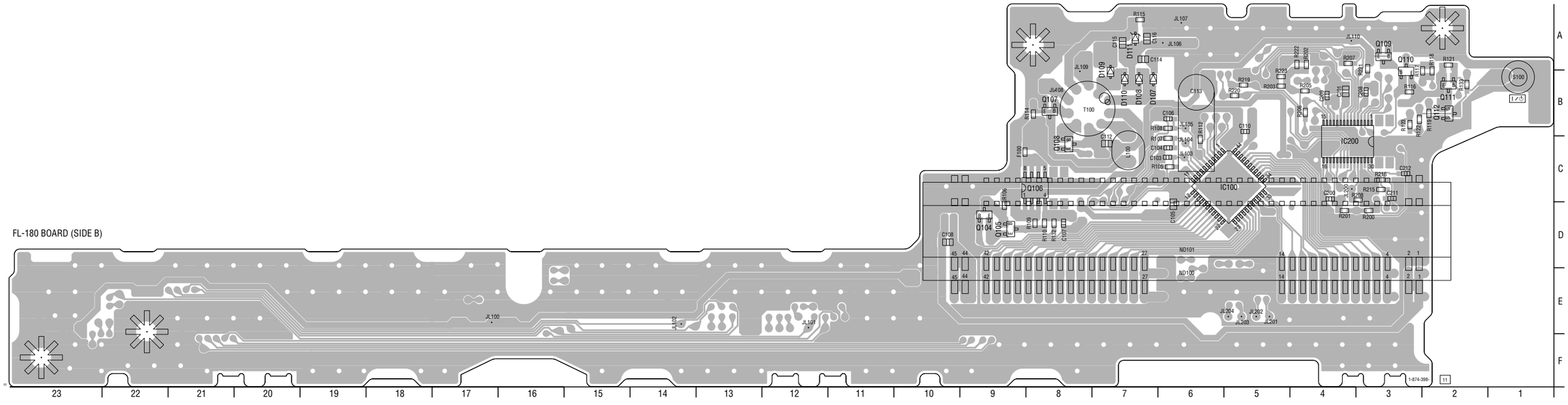

FL-180 BOARD (SIDE B)

D107	B-7
D108	B-7
D109	B-7
D110	B-7
D111	A-7
IC100	C-5
IC200	C-4
Q106	C-8
Q107	B-8
Q108	C-8

FR-276 (LED DRIVE, FUNCTION KEY) PRINTED WIRING BOARD

– Ref. No. : FR-276 board; 1,000 series –

LF : Uses unleaded solder. • See page 2-5 for circuit boards location.

There are a few cases that the part isn't mounted in this model is printed on this diagram.

FR-276 BOARD (SIDE A)

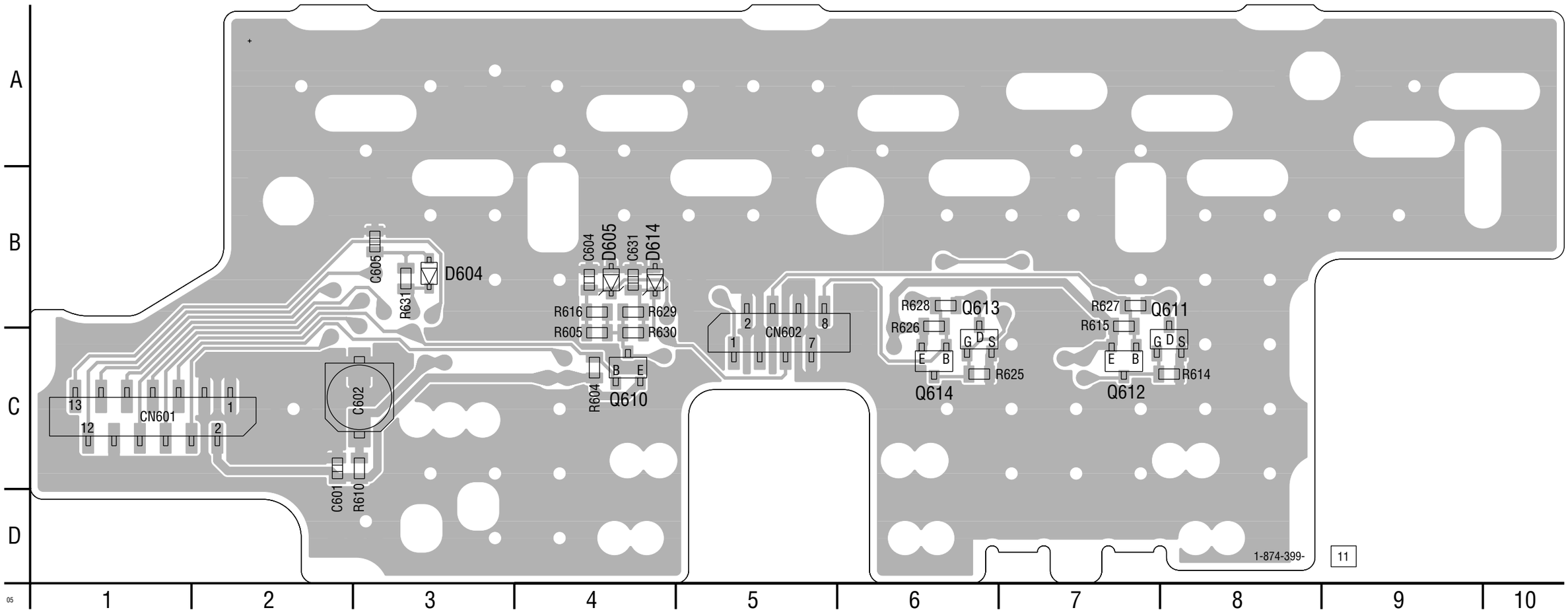

FR-276 BOARD (SIDE A)

CN601 C-1

FR-276 BOARD (SIDE B)

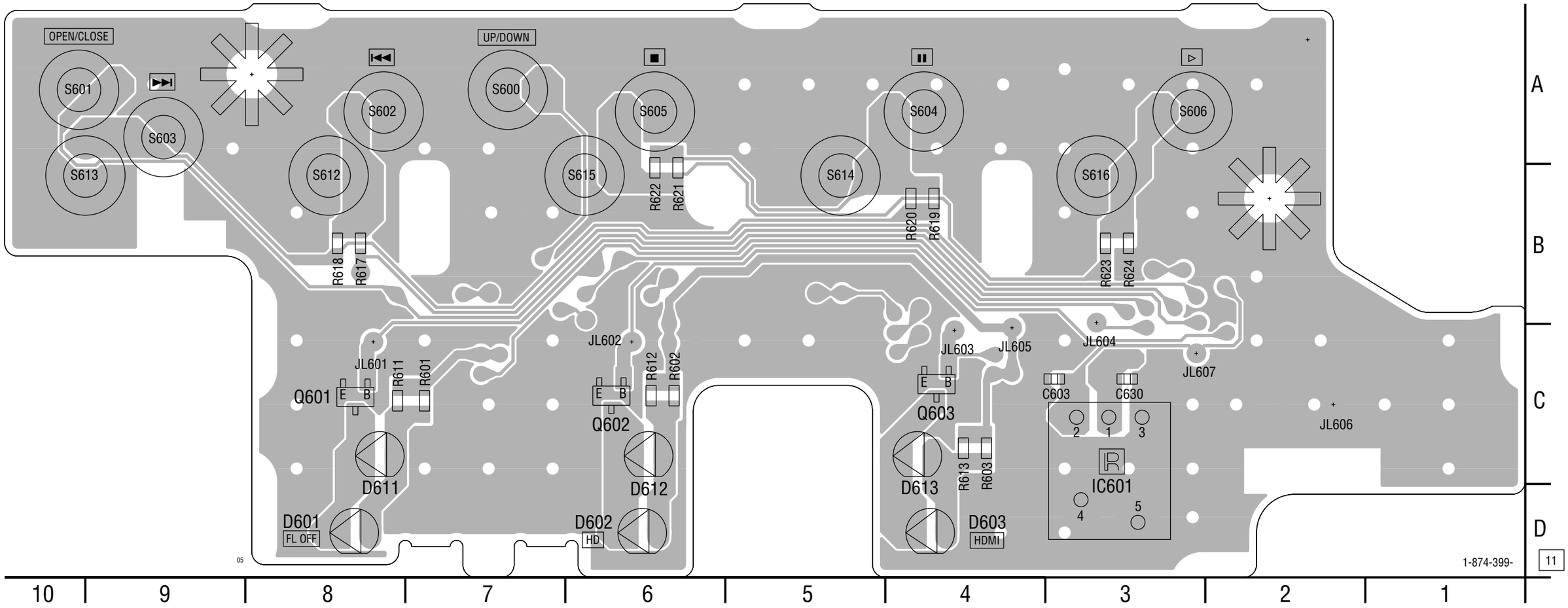

FL-180 BOARD (SIDE B)

D601	D-8
D602	D-6
D603	D-4
IC601	C-3
Q601	C-8
Q602	C-6
Q603	C-4

FR-276 (LED DRIVE, FUNCTION KEY) SCHEMATIC DIAGRAM **• See page 4-19 for printed wiring board.**

– Ref. No. : FR-276 board; 1,000 series –

FR-276 BOARD

LED DRIVE,FUNCTION KEY

-REF.NO.:1,000 SERIES-

XX MARK:NO MOUNT

NO MARK:PB MODE

FL-180 BOARD (1/2) CN102 (SEE PAGE 4-11)

CN601 13P

GND	1	JL606
V+5E	2	
GND	3	
LED_HD	4	JL602
LED_HDMI	5	JL603
LED_FL_OFF	6	JL601
LED_PON2	7	JL604
KEY1	8	
KEY0	9	
GMD	10	JL607
IR	11	
TRAY_CLOSE	12	
UP/DOWN	13	

JL605

IC601
REMOTE COMMANDER RECEIVER
IC601
GP1UM27XK0SF
1 VCC
2 OUT
3 GND
4
5

S602 S612 XX
S603 S613 XX
S604 S614 XX
S605 S615 XX
S606 S616 XX

R617 1.8k
R618 2.2k
R620 8.2k
R619 8.2k
R622 12k
R621 12k
R623 12k
R624 XX
R610 47
R631 100
D604 XX
C605 0.01
C601 0.01
C603 XX
C630 XX
C602 47 10V

S601 OPEN/CLOSE

Q611 2SK2009(TE85L) SWITCH

R615 XX
Q612 XX
R627 XX
R614 10k

CN602 XX

1	LED_SW2
2	GND(LED)
3	GND
4	PON_SW2
5	LED_SW1
6	GND(LED)
7	GND
8	PON_SW1

R628 XX
R626 XX
S600 UP/DOWN
Q614 XX
Q613 XX
R625 XX

R613 820
R603 XX
R612 820
R602 XX
R611 2.2k
R601 XX
R604 XX
Q610 XX

D613 XX HDMI
D603 NSPW-310BST-A0S
D612 XX HD
D602 NSPW-310BST-A0S
D611 XX FL OFF
D601 NSPW-310BST-A0S

R605 XX
R616 XX
R630 XX
R629 XX
D605 XX
C604 XX
D614 XX
C631 XX

Q603 DTC114YKA-T146 LED DRIVE
Q602 DTC114YKA-T146 LED DRIVE
Q601 DTC114YKA-T146 LED DRIVE

B+

IR-063 (CONNECTOR) SCHEMATIC DIAGRAM

– Ref. No. : IR-063 board; 1,000 series –

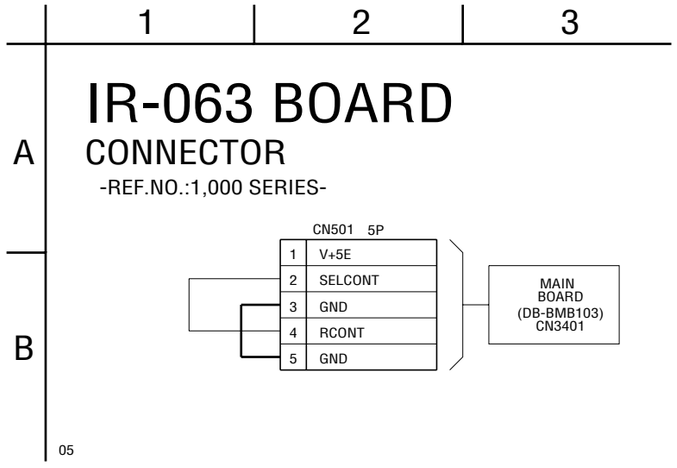

IR-063 (CONNECTOR) PRINTED WIRING BOARD

– Ref. No. : IR-063 board; 1,000 series –

: Uses unleaded solder. • See page 2-5 for circuit boards location.

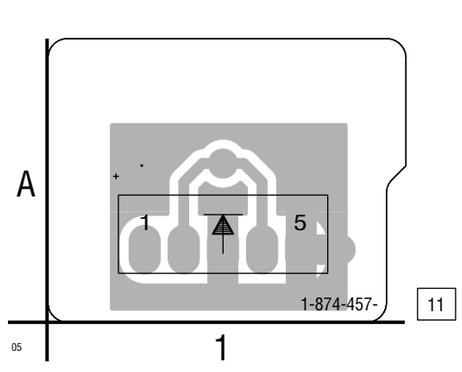

MEMO

SECTION 5
TROUBLESHOOTING

Main Set, Power Supply Section

Flowchart No.1

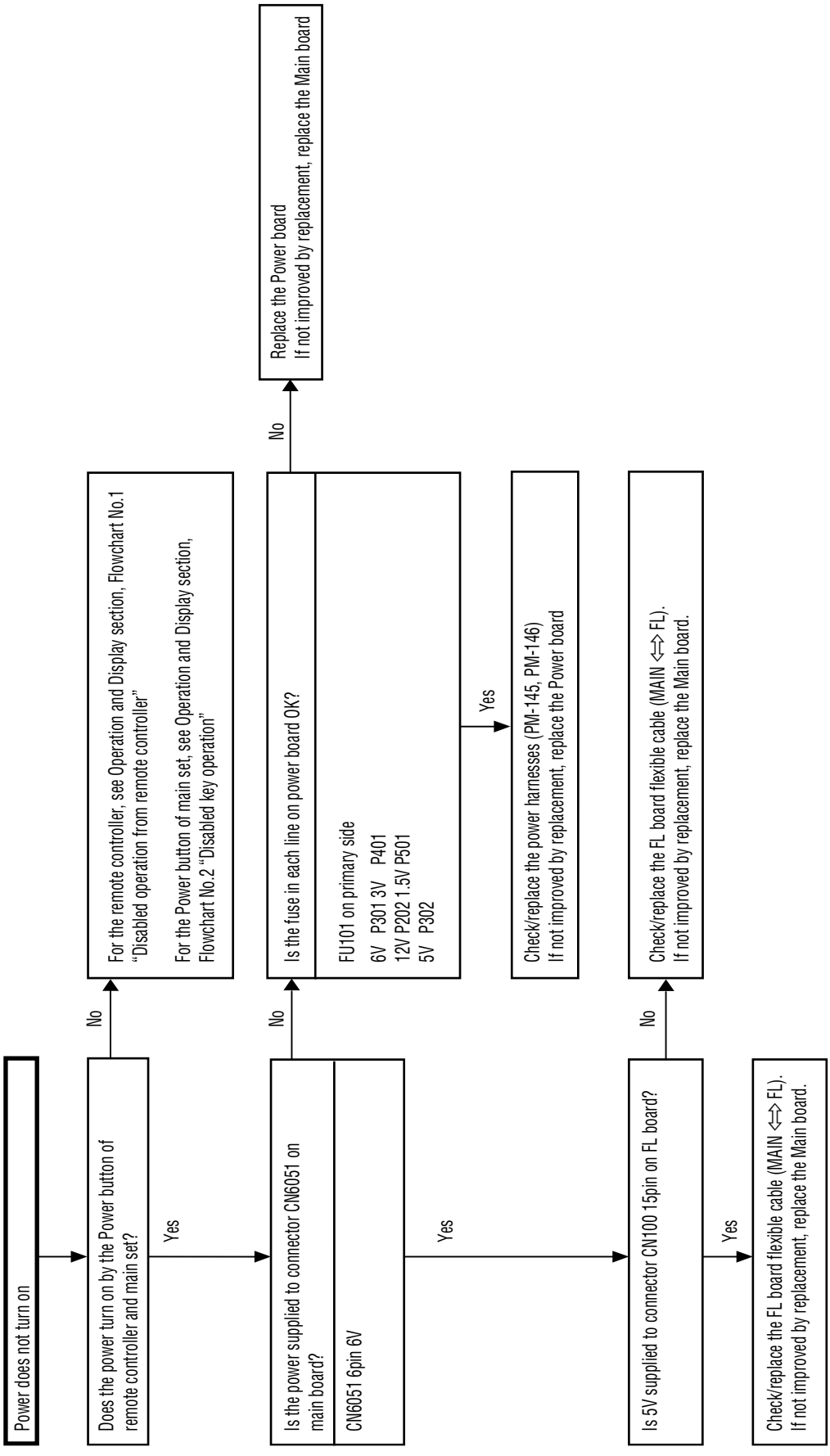

Main Set, Power Supply Section

Flowchart No.2

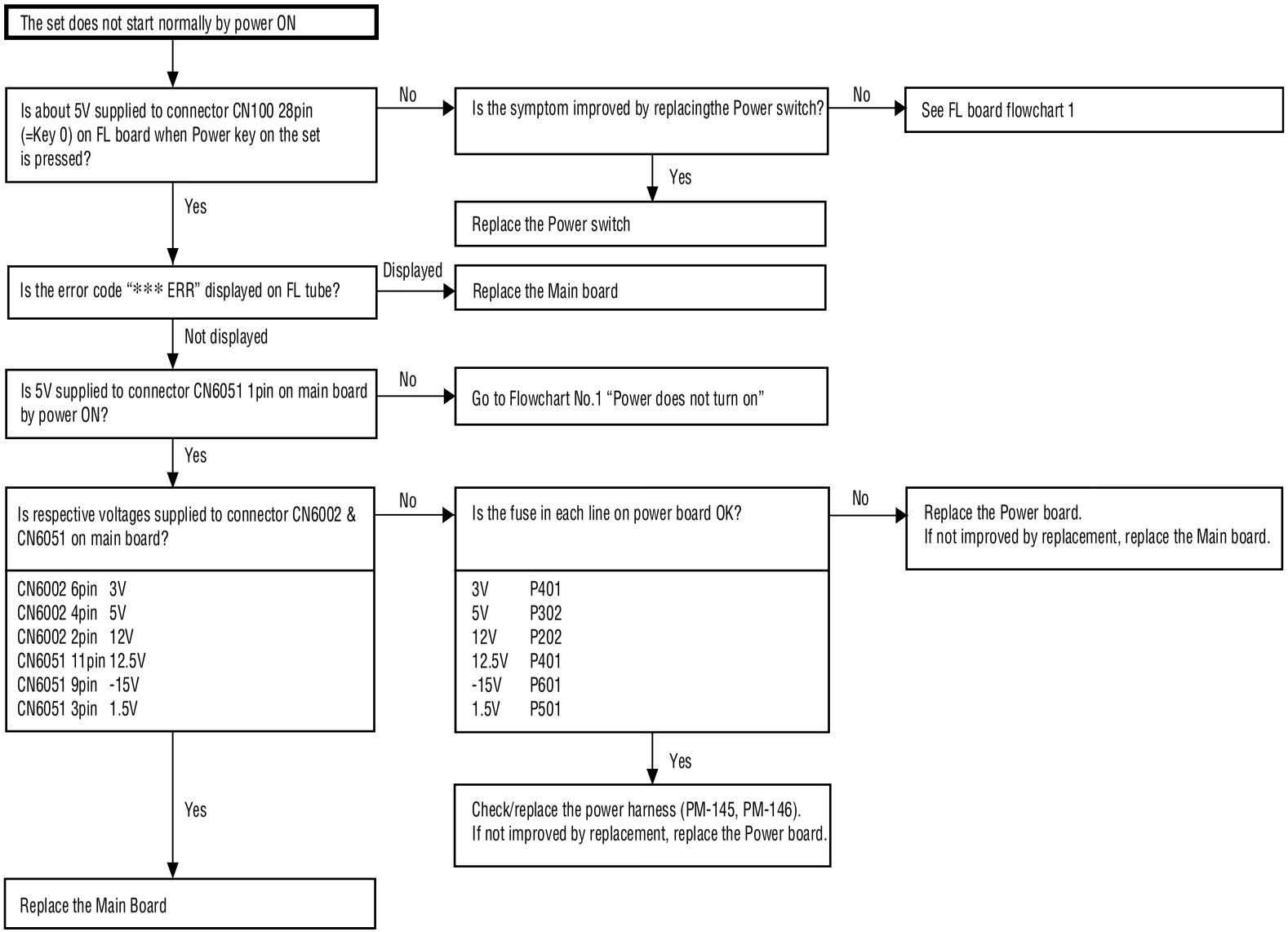

Main Set, Power Supply Section

Flowchart No.3

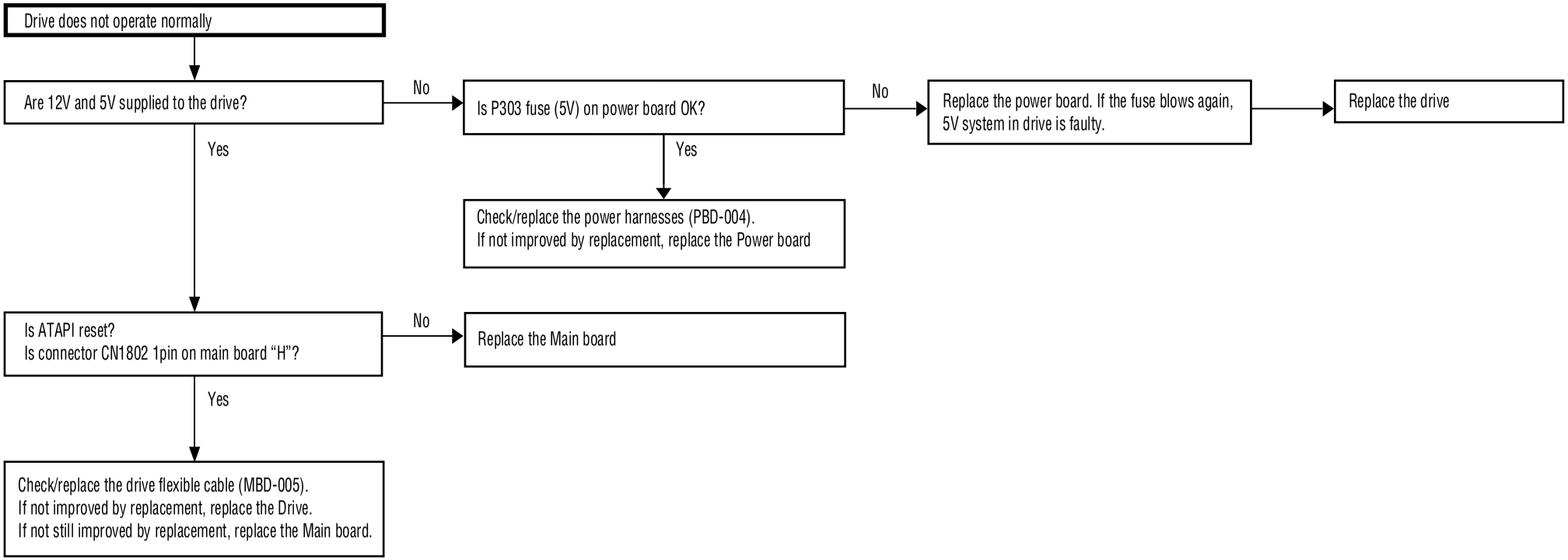

Main Set, Power Supply Section

Flowchart No.4

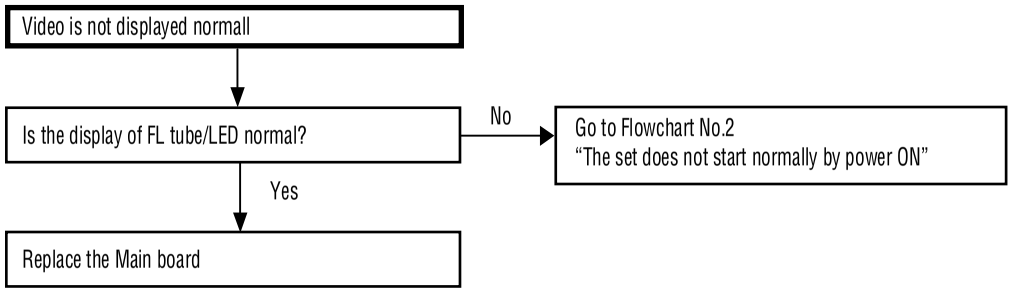

Main Set, Power Supply Section

Flowchart No.5

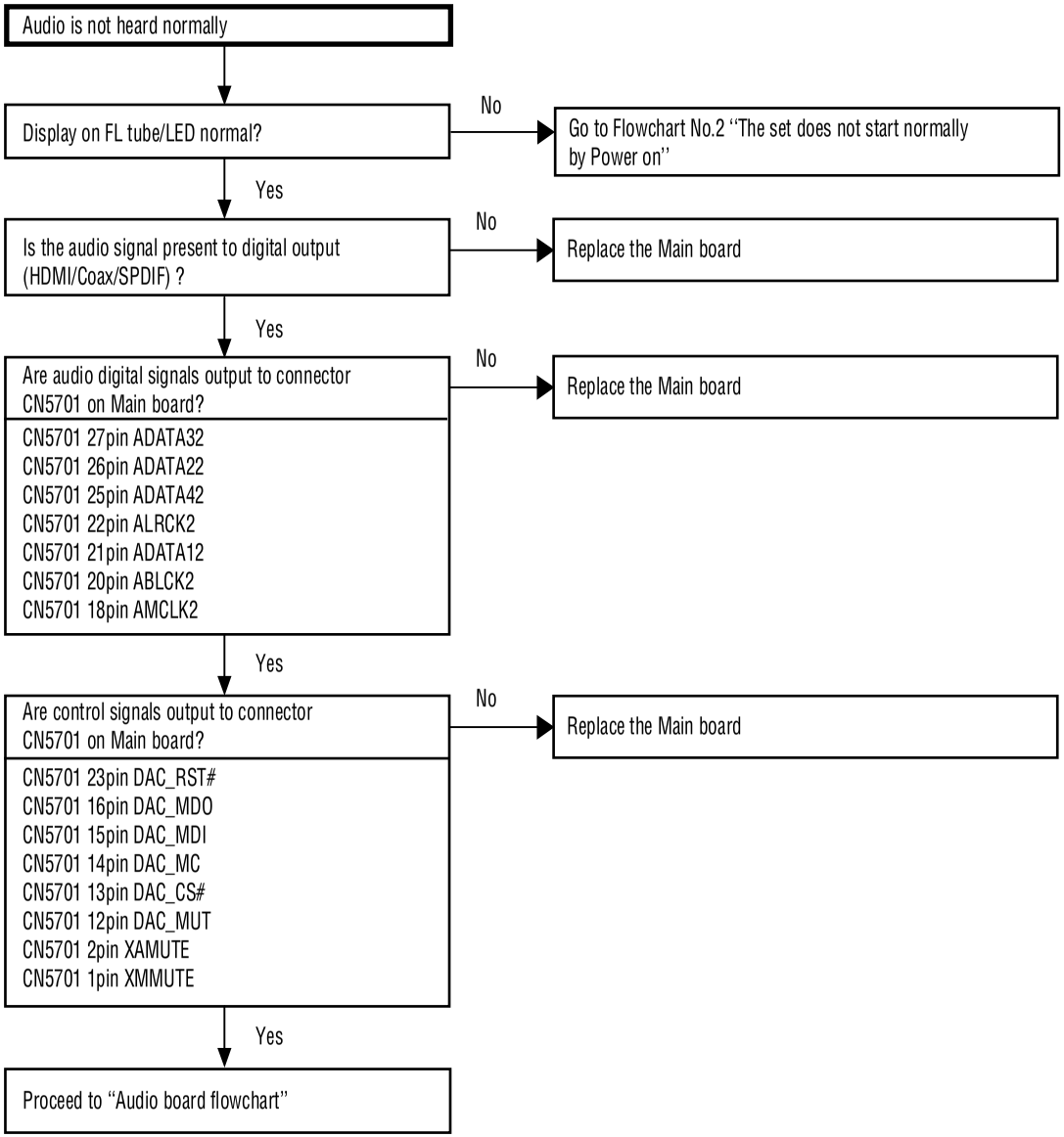

Main Set, Power Supply Section

Flowchart No.6

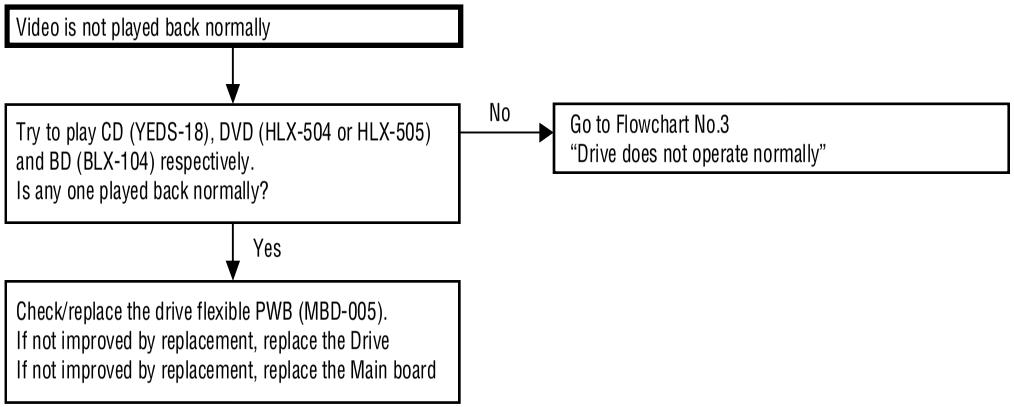

Main Set, Power Supply Section

Flowchart No.7

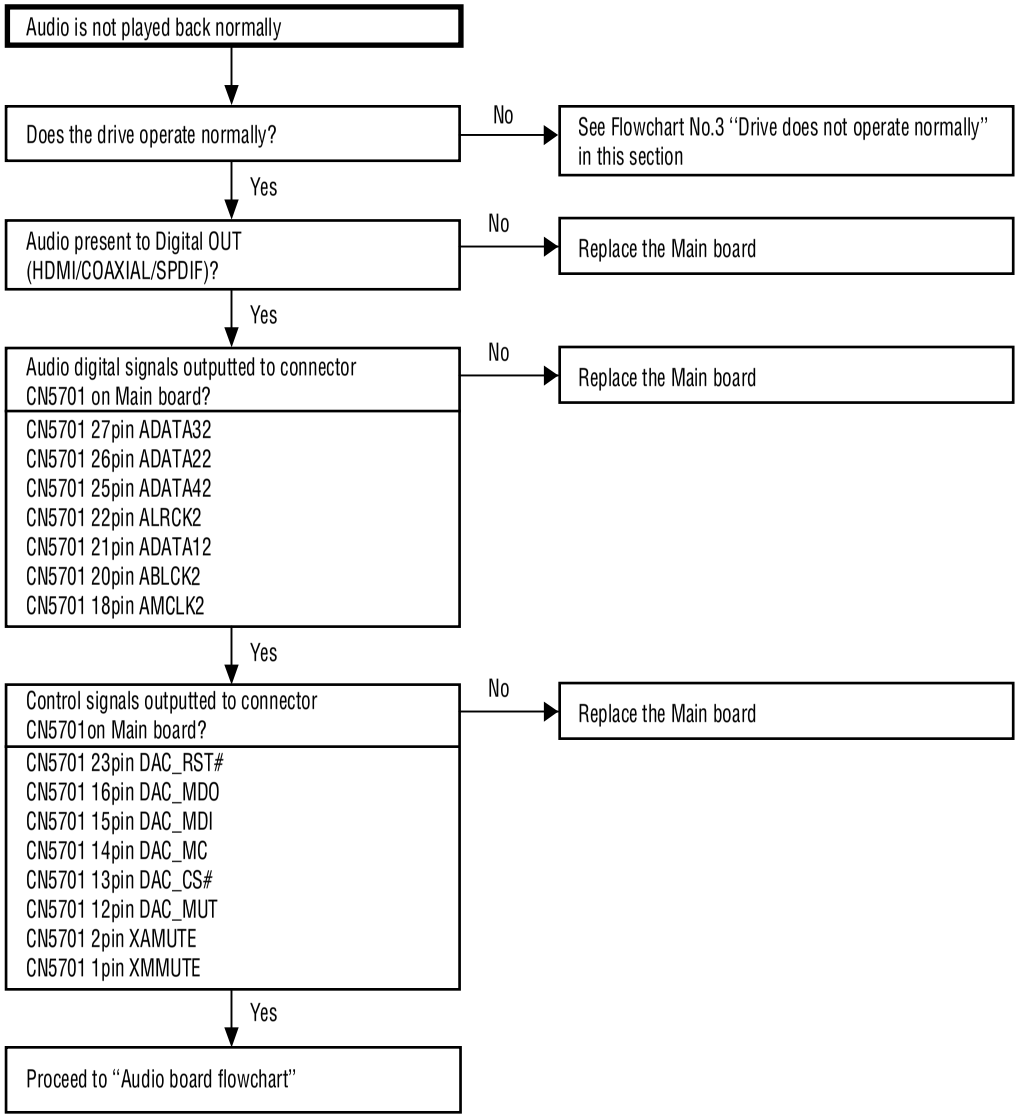

Main Set, Power Supply Section

Flowchart No.8

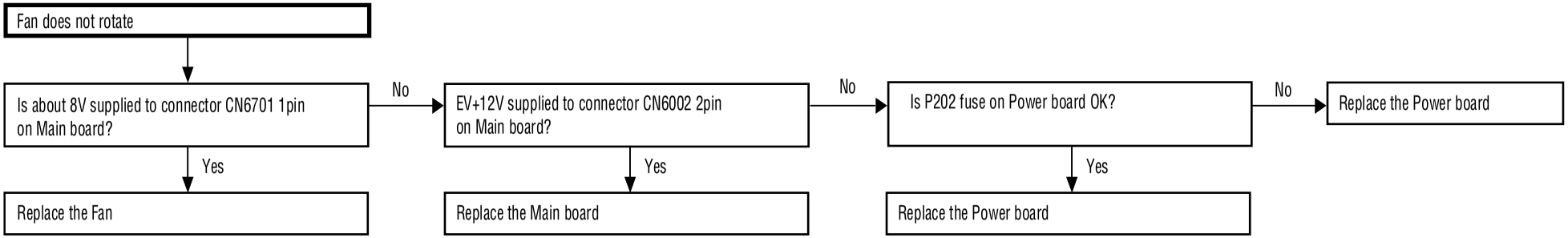

Operation & Display Section

Flowchart No.1

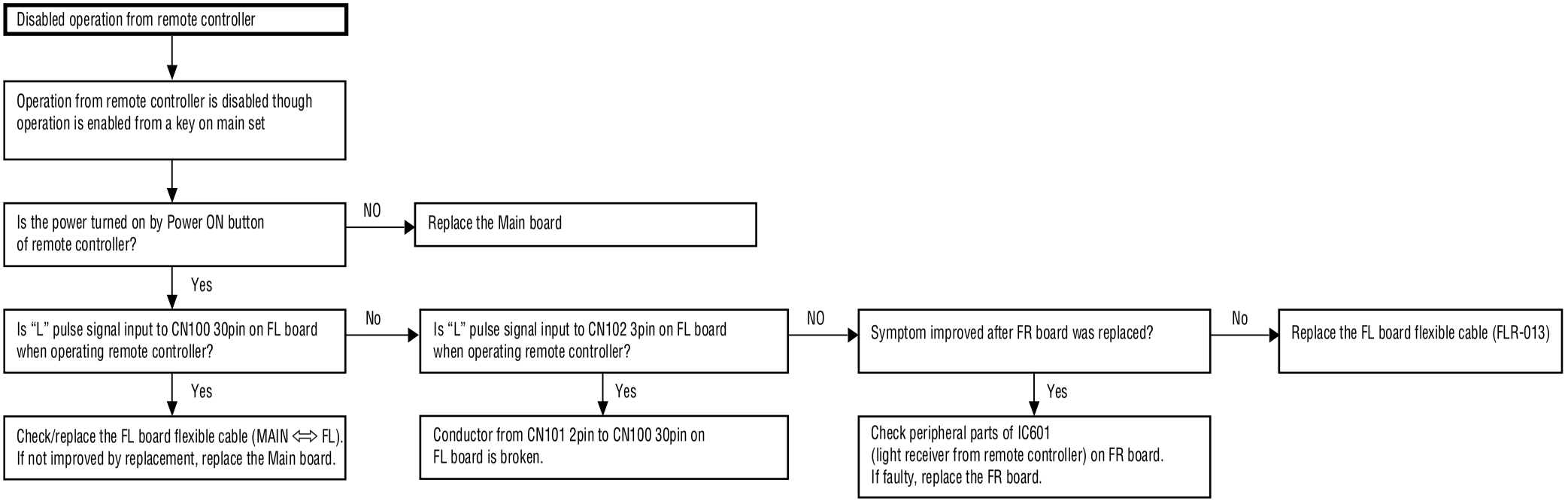

Operation & Display Section

Flowchart No.2

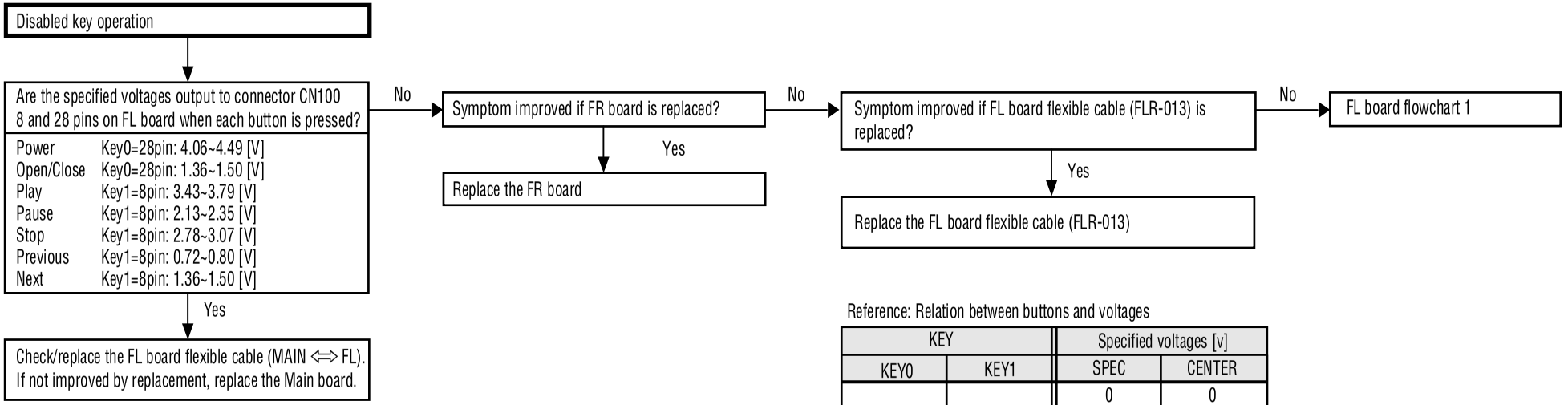

Reference: Relation between buttons and voltages

KEY		Specified voltages [v]	
KEY0	KEY1	SPEC	CENTER
		0	0
	PREVIOUS	0.72~0.80	0.76
OPEN/CLOSE	NEXT	1.36~1.50	1.43
	PAUSE	2.13~2.35	2.24
	STOP	2.78~3.07	2.92
	PLAY	3.43~3.79	3.61
P_ON		4.06~4.49	4.27

Operation & Display Section

Flowchart No.3

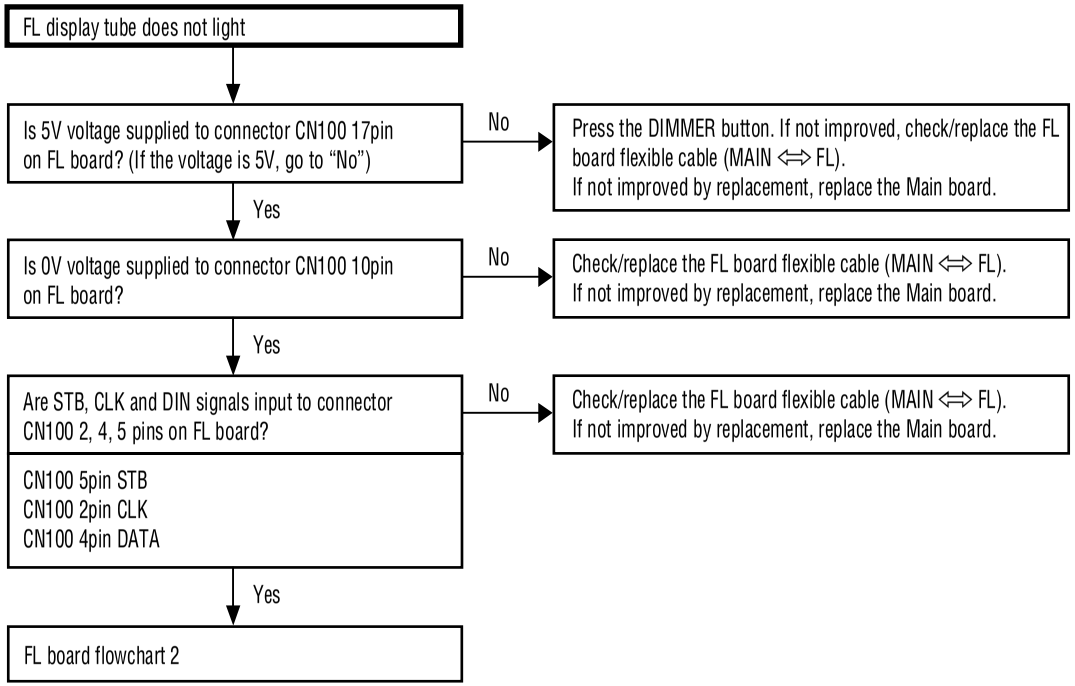

Operation & Display Section

Flowchart No.4

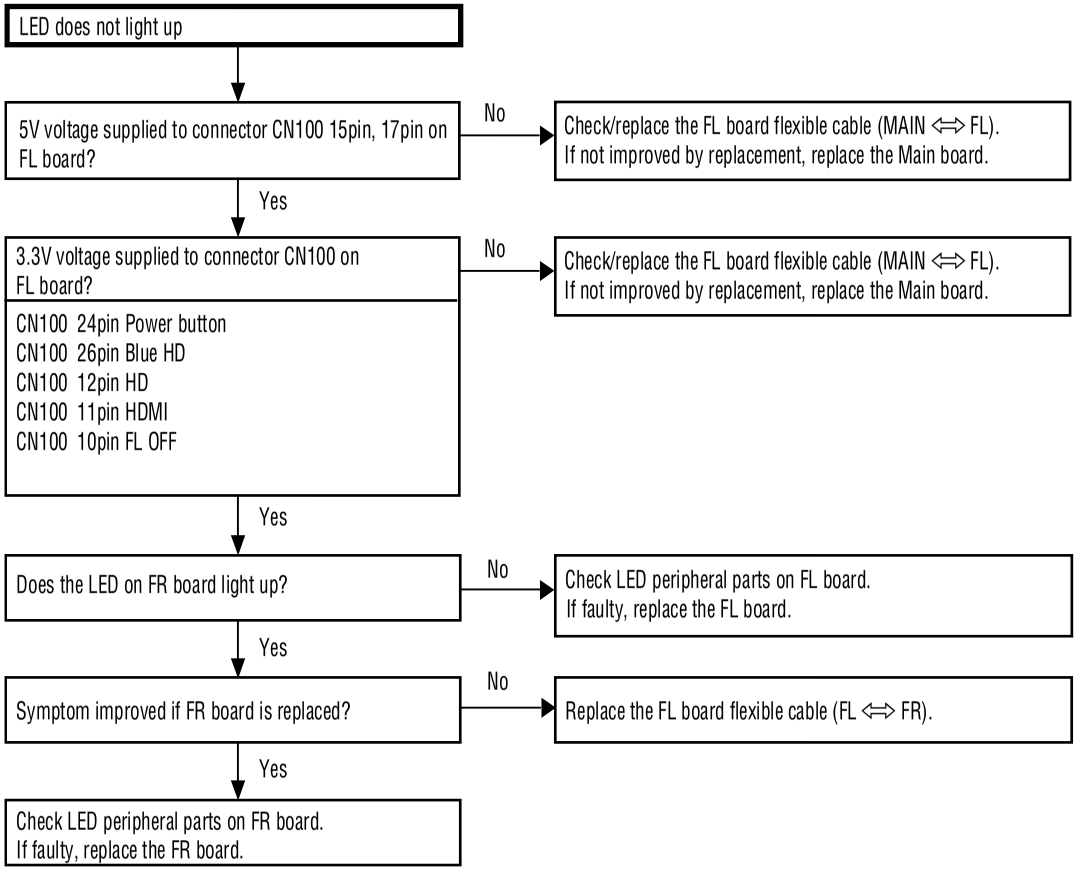

Audio Section

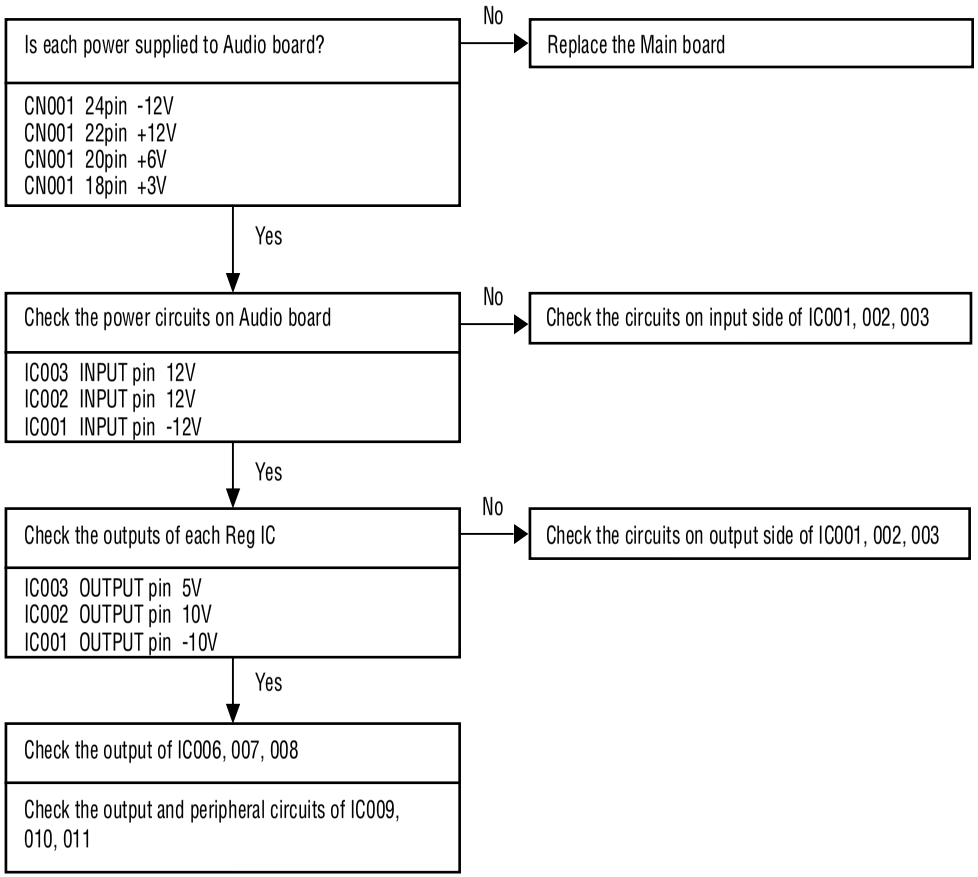

FL Section

Flowchart No.1

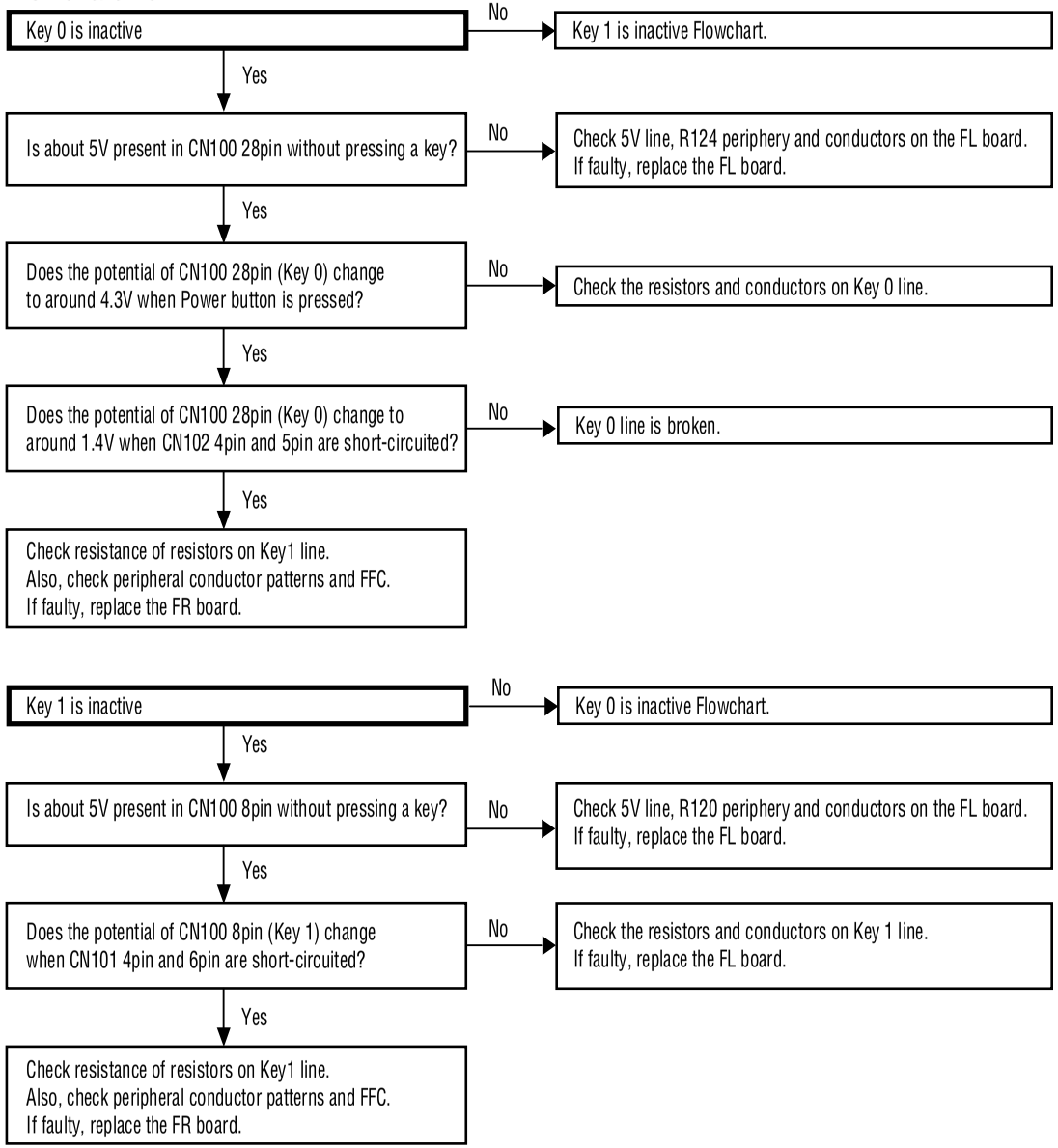

FL Section

Flowchart No.2

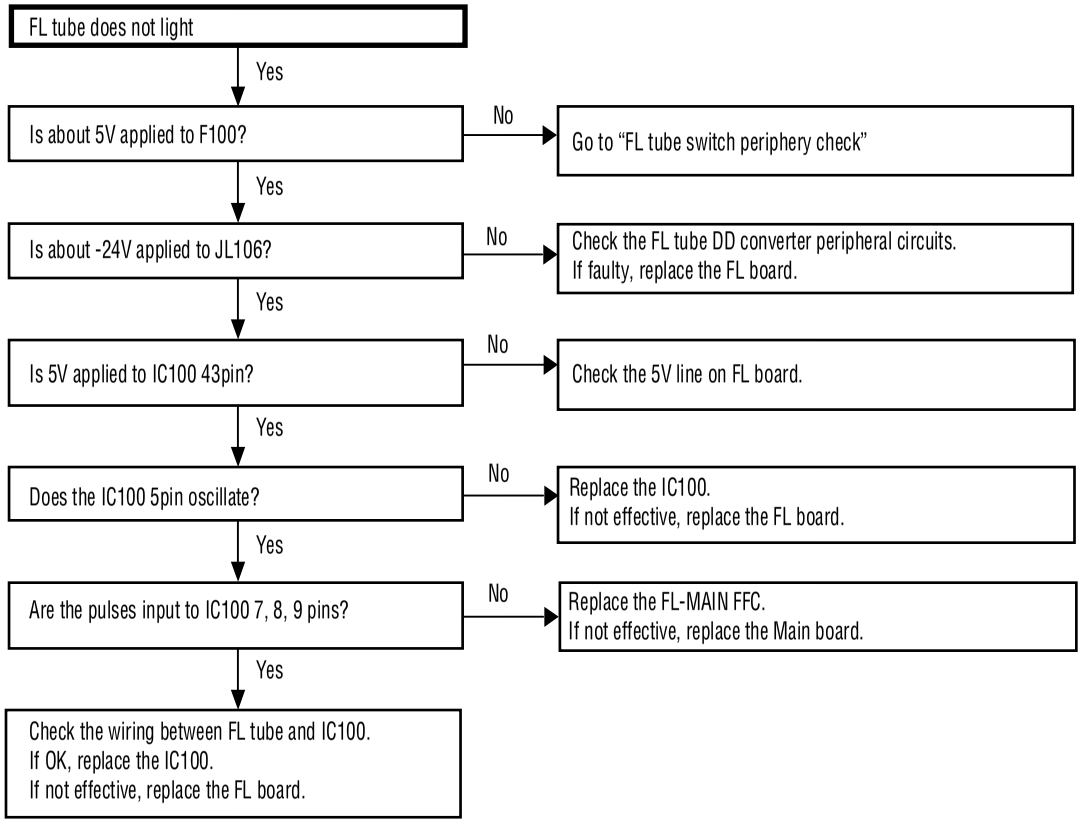

Reference: Relation between buttons and voltages

KEY		Specified voltages [v]	
KEY0	KEY1	SPEC	CENTER
		0	0
	PREVIOUS	0.72~0.80	0.76
OPEN/CLOSE	NEXT	1.36~1.50	1.43
	PAUSE	2.13~2.35	2.24
	STOP	2.78~3.07	2.92
	PLAY	3.43~3.79	3.61
P_ON		4.06~4.49	4.27

FL Section

Flowchart No.3

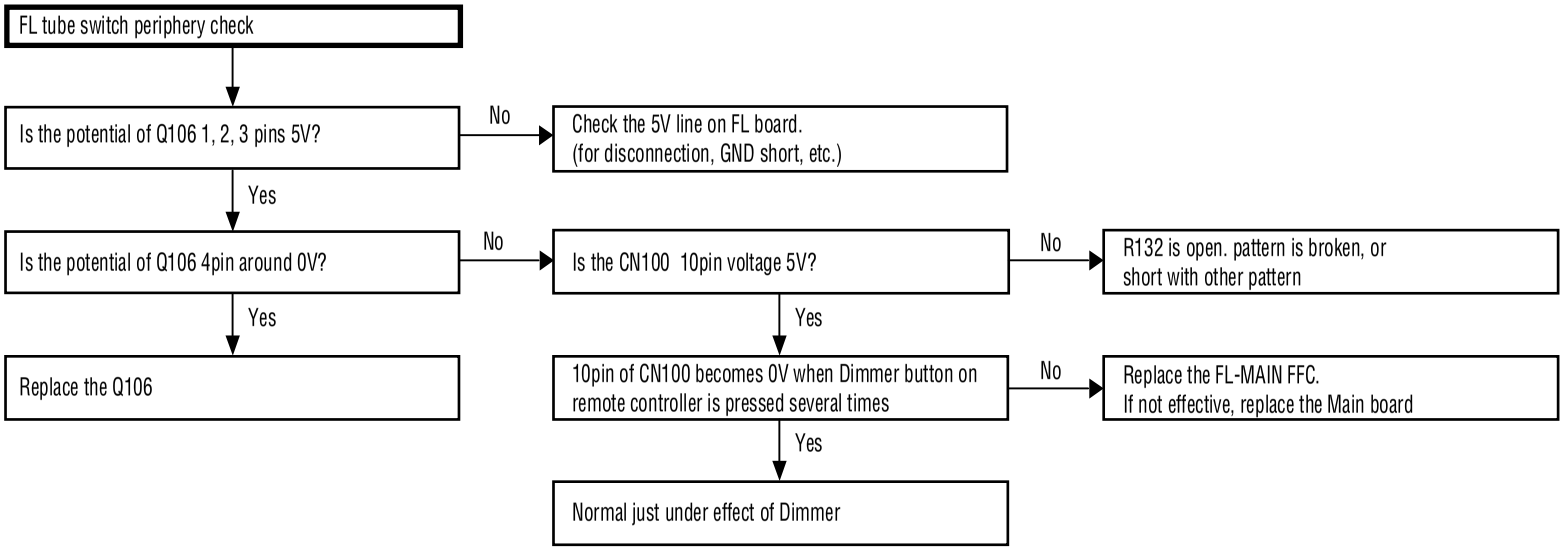

(Main Set, Drive Section)

Flowchart No.3

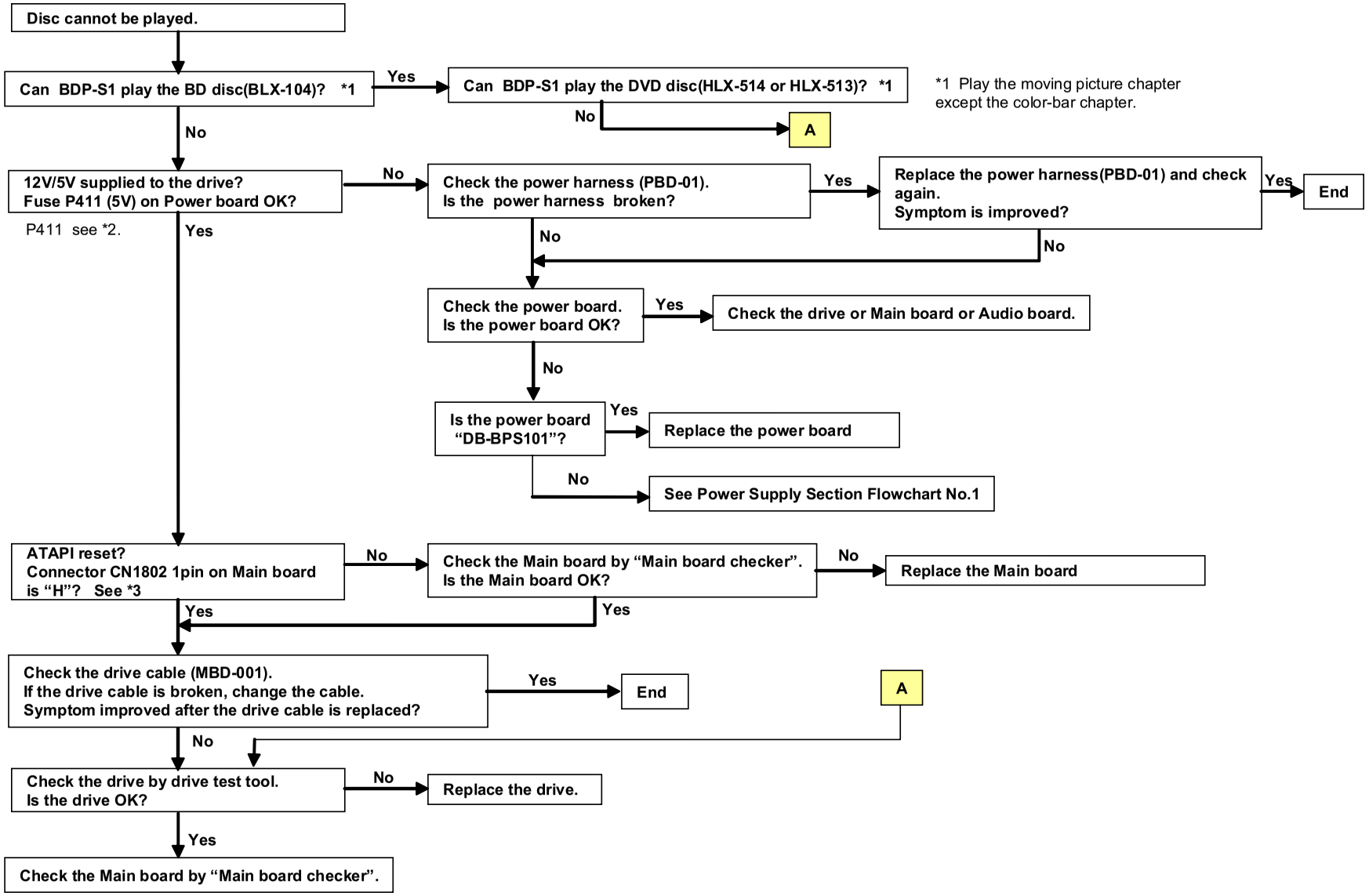

*1 Play the moving picture chapter except the color-bar chapter.

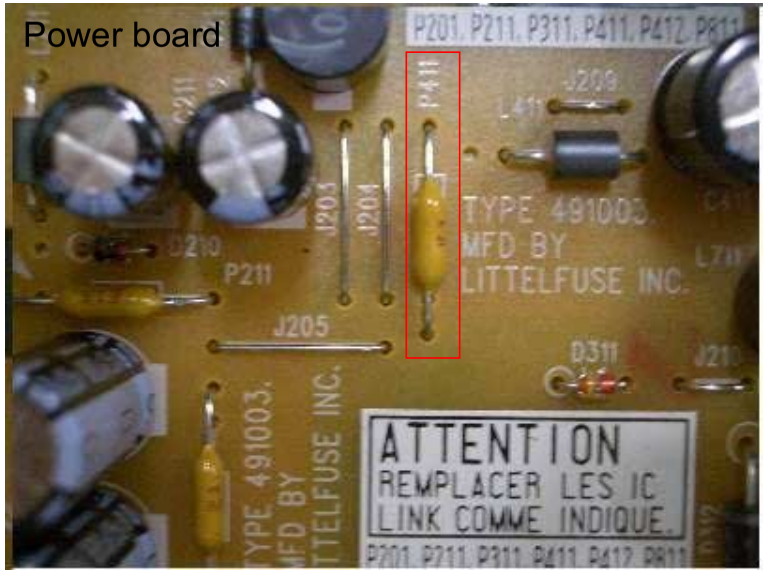

*2 P411 is on the Power board.

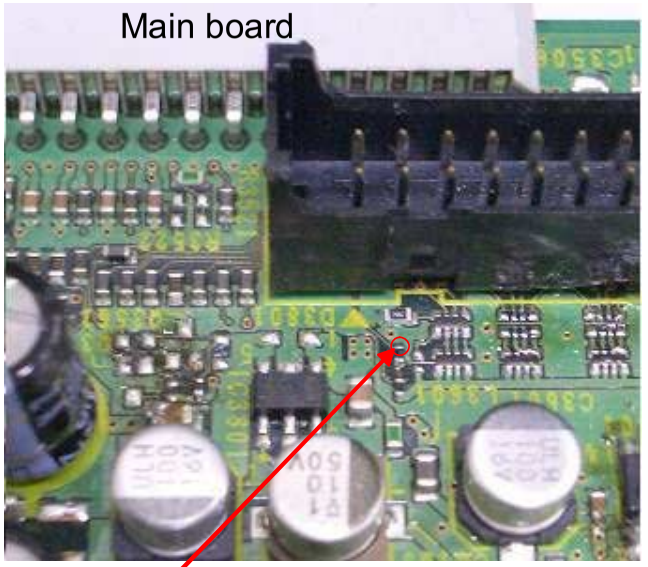

*3 RESET#. Check this point.

MEMO

SECTION 6
REPAIR PARTS LIST

6-1. EXPLODED VIEWS

NOTE:

- -XX and -X mean standardized parts, so they may have some difference from the original one.
- Color Indication of Appearance Parts
  Example:
  KNOB, BALANCE (WHITE) . . . (RED)
  ↑ ↑
  Parts Color Cabinet's Color
- Items marked "*" are not stocked since they are seldom required for routine service. Some delay should be anticipated when ordering these items.
- The mechanical parts with no reference number in the exploded views are not supplied.
- Accessories and packing materials are given in the last of the electrical parts list.
- Abbreviation
  AUS : Australian model
  CND : Canadian model
  RUS : Russian model

The components identified by mark ⚠ or dotted line with mark ⚠ are critical for safety.
Replace only with part number specified.

Les composants identifiés par une marque ⚠ sont critiquens pour la sécurité.
Ne les remplacer que par une pièce portant le numéro spécifié.

6-1-1. CASE ASSY

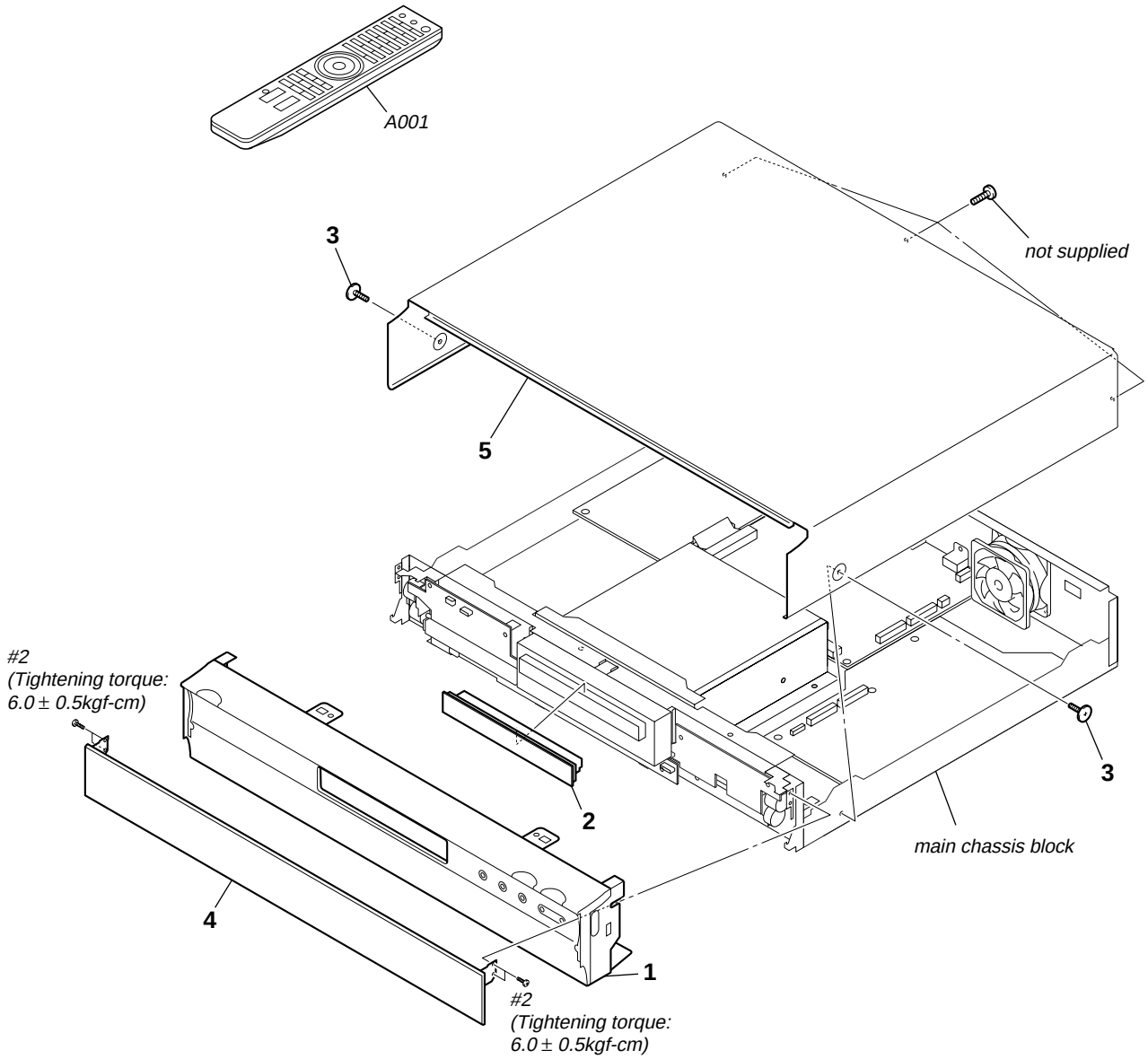

Ref. No.	Part No.	Description	Remark
1	X-2178-990-1	FRONT PANEL ASSY (EXCEPT UK)	
1	X-2187-783-1	FRONT PANEL ASSY (UK)	
2	X-2178-991-1	COVER TRAY ASSY	
3	3-070-883-71	SCREW, TAPPING	
4	A-1436-998-A	DISPLAY FRONT BLOCK (SERVICE)	
5	A-1436-999-A	CASE BLOCK (SERVICE USE SOEM)	

Ref. No.	Part No.	Description	Remark
A001	1-479-848-31	REMOTE COMMANDER (RMT-B101A)	(US, CND)
A001	1-480-207-21	REMOTE COMMANDER (RMT-B101P)	(AEP, UK, RUS, AUS)
#2	7-682-145-01	SCREW +P 3X4 (Tightening torque: 6.0±0.5kgf-cm)	

6-1-2. MAIN CHASSIS BLOCK

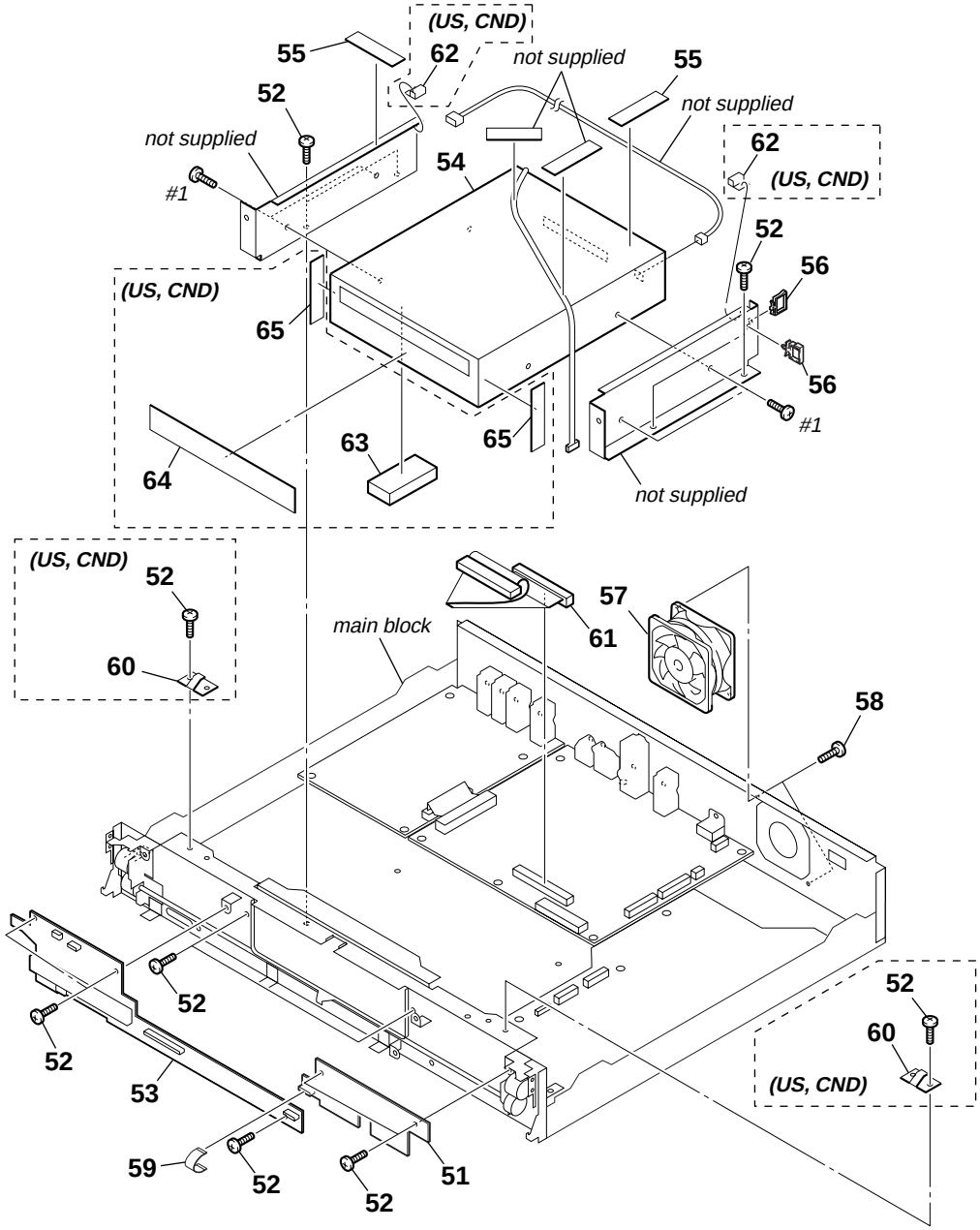

Ref. No.	Part No.	Description	Remark
51	A-1334-394-A	FR-276 BOARD, COMPLETE	
52	3-077-331-01	+BV3 (3-CR)	
53	A-1334-392-A	FL-180 (S) BOARD, COMPLETE	
54	A-1337-676-A	DRIVE (SOEM (SERVICE USE R1)) (US, CND)	
54	A-1337-677-A	DRIVE (SOEM (SERVICE USE R2)) (AEP, UK)	
54	A-1337-678-A	DRIVE (SOEM (SERVICE USE R4)) (AUS)	
54	A-1382-236-A	DRIVE (SOEM (SERVICE USE R5)) (RUS)	
55	3-087-220-01	TAPE, NON-HALOGENE	
* 56	4-099-553-01	REUSE CLAMP	
57	1-787-625-21	FAN, DC	

Ref. No.	Part No.	Description	Remark
58	3-077-331-31	+BV3 (3-CR)	
* 59	1-834-510-11	CABLE, FLEXIBLE FLAT (FLR-013)	
60	2-348-685-11	SPRING, EARTH (FRONT) (US, CND)	
* 61	1-965-671-11	HARNESS (MBD-005) (US, CND)	
* 61	1-965-672-11	HARNESS (MBD-006) (AEP, UK, RUS, AUS)	
62	3-282-212-01	GASKET (BRAKET) (US, CND)	
63	3-283-907-01	BLOCK, FCC (US, CND)	
64	3-282-487-01	TAPE (D), SHIELD (US, CND)	
65	3-283-864-01	TAPE (D-WH), SHIELD (US, CND)	
#1	7-682-544-09	+B 3X3	

6-1-3. MAIN BLOCK

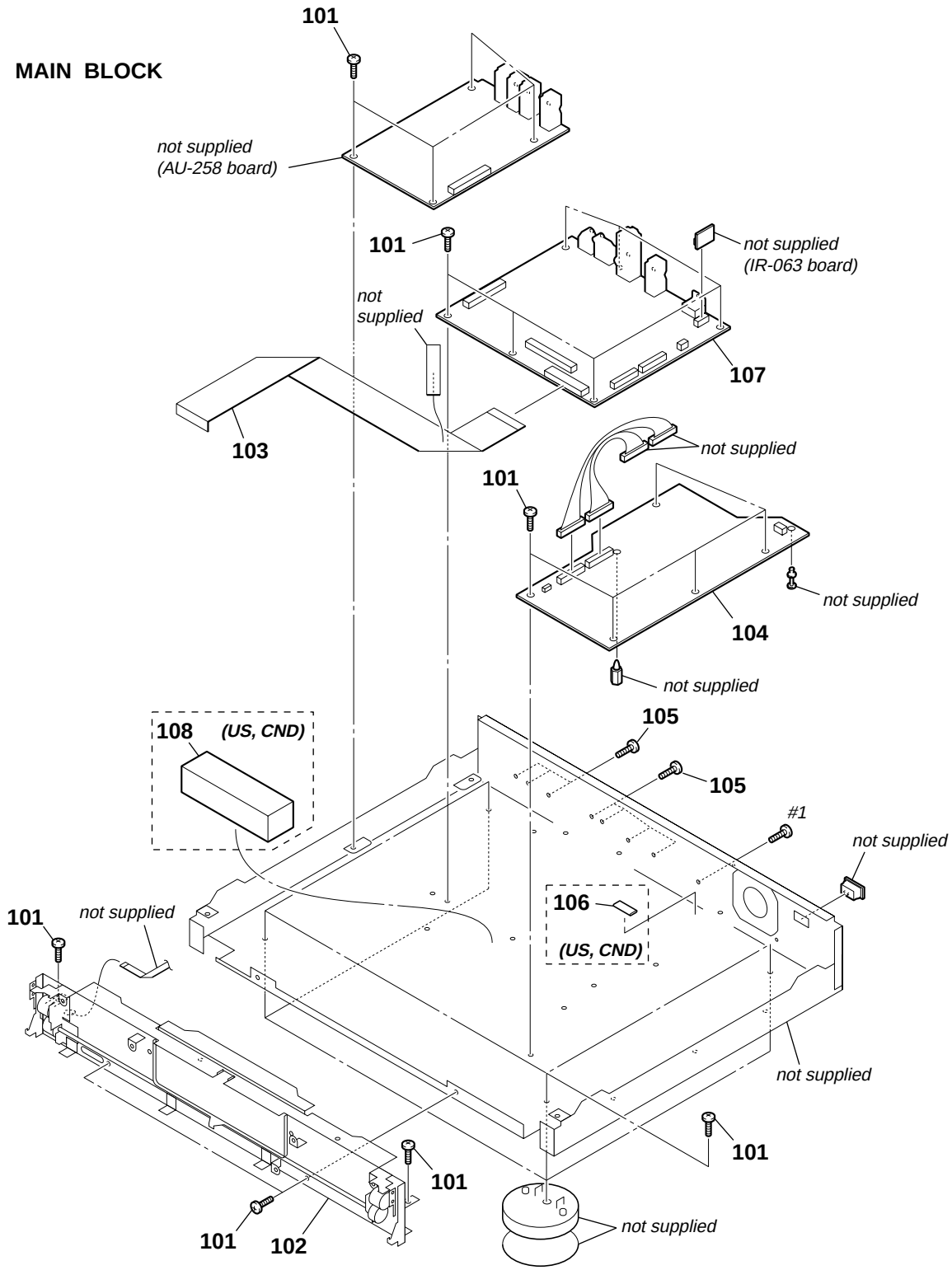

The components identified by mark ⚠ or dotted line with mark ⚠ are critical for safety. Replace only with part number specified.	Les composants identifiés par une marque ⚠ sont critiques pour la sécurité. Ne les remplacer que par une pièce portant le numéro spécifié.

The components identified by mark 🔒 contain confidential information. Strictly follow the instructions whenever the components are repaired and/or replaced.

Les composants identifiés par la marque 🔒 contiennent des informations confidentielles. Suivre scrupuleusement les instructions chaque fois qu'un composant est remplacé et / ou réparé.

Ref. No.	Part No.	Description	Remark
101	3-077-331-01	+BV3 (3-CR)	
102	A-1286-513-A	DRIVING BLOCK ASSY (S), DOOR	
103	1-834-511-11	CABLE, FLEXIBLE FLAT (FML-004)	
⚠104	1-474-057-41	POWER BLOCK (ZSSR641GA) (US, CND)	
⚠104	1-474-057-51	POWER BLOCK (ZSSR641IA) (AEP, UK, RUS, AUS)	
105	3-077-331-31	+BV3 (3-CR)	
106	3-274-166-01	GASKET, REAR (US, CND)	
#1	7-682-544-09	+B 3X3	
🔒107	A-1439-317-A	PWB, MOUNTED (US, CND)	
🔒107	A-1439-318-A	PWB, MOUNTED (AEP, UK)	
🔒107	A-1439-319-A	PWB, MOUNTED (RUS)	
🔒107	A-1439-320-A	PWB, MOUNTED AUS)	
108	2-893-757-11	BLOCK, ATA CABLE (US, CND)	

6-2. ELECTRICAL PARTS LIST

NOTE:
- Due to standardization, replacements in the parts list may be different from the parts specified in the diagrams or the components used on the set.
- -XX and -X mean standardized parts, so they may have some difference from the original one.
- RESISTORS
  All resistors are in ohms.
  METAL: Metal-film resistor.
  METAL OXIDE: Metal oxide-film resistor.
  F: nonflammable
- Items marked "*" are not stocked since they are seldom required for routine service.
  Some delay should be anticipated when ordering these items.
- SEMICONDUCTORS
  In each case, u: μ, for example:
  uA. . : μA. . uPA. . : μPA. .
  uPB. . : μPB. . uPC. . : μPC. .
  uPD. . : μPD. .
- CAPACITORS
  uF: μF
- COILS
  uH: μH

The components identified by mark ⚠ or dotted line with mark ⚠ are critical for safety.
Replace only with part number specified.

Les composants identifiés par une marque ⚠ sont critiquens pour la sécurité.
Ne les remplacer que par une pièce portant le numéro spécifié.

When indicating parts by reference number, please include the board.

Ref. No.	Part No.	Description			Remark
		AU-258 BOARD			(Ref. No. 1000 Series)
		**********			
		< CAPACITOR >			
C002	1-126-767-11	ELECT	1000uF	20%	16V
C003	1-126-947-11	ELECT	47uF	20%	35V
C004	1-126-947-11	ELECT	47uF	20%	35V
C005	1-107-826-11	CERAMIC CHIP	0.1uF	10%	16V
C006	1-126-947-11	ELECT	47uF	20%	35V
C007	1-126-947-11	ELECT	47uF	20%	35V
C008	1-107-826-11	CERAMIC CHIP	0.1uF	10%	16V
C009	1-107-826-11	CERAMIC CHIP	0.1uF	10%	16V
C010	1-107-826-11	CERAMIC CHIP	0.1uF	10%	16V
C015	1-107-826-11	CERAMIC CHIP	0.1uF	10%	16V
C016	1-107-826-11	CERAMIC CHIP	0.1uF	10%	16V
C017	1-107-826-11	CERAMIC CHIP	0.1uF	10%	16V
C018	1-128-528-11	ELECT	470uF	20%	25V
C019	1-128-528-11	ELECT	470uF	20%	25V
C020	1-126-967-11	ELECT	47uF	20%	50V
C022	1-164-230-11	CERAMIC CHIP	220PF	5%	50V
C023	1-164-230-11	CERAMIC CHIP	220PF	5%	50V
C024	1-164-230-11	CERAMIC CHIP	220PF	5%	50V
C033	1-126-947-11	ELECT	47uF	20%	35V
C035	1-126-947-11	ELECT	47uF	20%	35V
C036	1-100-388-21	ELECT CHIP	39uF	20%	16V
C037	1-100-388-21	ELECT CHIP	39uF	20%	16V
C040	1-107-826-11	CERAMIC CHIP	0.1uF	10%	16V
C041	1-107-826-11	CERAMIC CHIP	0.1uF	10%	16V
C042	1-107-826-11	CERAMIC CHIP	0.1uF	10%	16V
C043	1-107-826-11	CERAMIC CHIP	0.1uF	10%	16V
C045	1-126-947-11	ELECT	47uF	20%	35V
C046	1-100-388-21	ELECT CHIP	39uF	20%	16V
C047	1-107-826-11	CERAMIC CHIP	0.1uF	10%	16V
C048	1-107-826-11	CERAMIC CHIP	0.1uF	10%	16V
C049	1-107-826-11	CERAMIC CHIP	0.1uF	10%	16V
C050	1-107-826-11	CERAMIC CHIP	0.1uF	10%	16V
C051	1-107-826-11	CERAMIC CHIP	0.1uF	10%	16V
C052	1-107-826-11	CERAMIC CHIP	0.1uF	10%	16V
C053	1-107-826-11	CERAMIC CHIP	0.1uF	10%	16V
C054	1-107-826-11	CERAMIC CHIP	0.1uF	10%	16V
C055	1-107-826-11	CERAMIC CHIP	0.1uF	10%	16V
C056	1-126-964-11	ELECT	10uF	20%	50V
C057	1-107-826-11	CERAMIC CHIP	0.1uF	10%	16V
C058	1-126-964-11	ELECT	10uF	20%	50V
C060	1-107-826-11	CERAMIC CHIP	0.1uF	10%	16V
C061	1-126-964-11	ELECT	10uF	20%	50V
C062	1-165-884-91	CERAMIC CHIP	2.2uF	10%	6.3V
C063	1-165-884-91	CERAMIC CHIP	2.2uF	10%	6.3V
C064	1-165-884-91	CERAMIC CHIP	2.2uF	10%	6.3V
C071	1-130-473-00	MYLAR	0.0015uF	5%	50V
C072	1-130-473-00	MYLAR	0.0015uF	5%	50V
C073	1-130-473-00	MYLAR	0.0015uF	5%	50V
C074	1-130-473-00	MYLAR	0.0015uF	5%	50V
C079	1-130-473-00	MYLAR	0.0015uF	5%	50V
C080	1-130-473-00	MYLAR	0.0015uF	5%	50V
C081	1-130-467-00	MYLAR	470PF	5%	50V
C082	1-130-467-00	MYLAR	470PF	5%	50V
C083	1-130-467-00	MYLAR	470PF	5%	50V
C084	1-130-467-00	MYLAR	470PF	5%	50V
C085	1-130-467-00	MYLAR	470PF	5%	50V
C086	1-130-467-00	MYLAR	470PF	5%	50V
C087	1-130-467-00	MYLAR	470PF	5%	50V
C088	1-130-467-00	MYLAR	470PF	5%	50V
C105	1-130-467-00	MYLAR	470PF	5%	50V
C106	1-130-467-00	MYLAR	470PF	5%	50V
C107	1-130-467-00	MYLAR	470PF	5%	50V
C108	1-130-467-00	MYLAR	470PF	5%	50V
C109	1-107-826-11	CERAMIC CHIP	0.1uF	10%	16V
C110	1-107-826-11	CERAMIC CHIP	0.1uF	10%	16V
C116	1-107-826-11	CERAMIC CHIP	0.1uF	10%	16V
C117	1-107-826-11	CERAMIC CHIP	0.1uF	10%	16V
C118	1-107-826-11	CERAMIC CHIP	0.1uF	10%	16V
C119	1-128-552-11	ELECT	47uF	20%	63V
C120	1-128-552-11	ELECT	47uF	20%	63V
C121	1-128-552-11	ELECT	47uF	20%	63V
C122	1-128-552-11	ELECT	47uF	20%	63V
C123	1-107-826-11	CERAMIC CHIP	0.1uF	10%	16V
C124	1-136-165-00	FILM	0.1uF	5%	50V
C125	1-136-165-00	FILM	0.1uF	5%	50V
C126	1-136-165-00	FILM	0.1uF	5%	50V
C127	1-136-165-00	FILM	0.1uF	5%	50V
C128	1-128-552-11	ELECT	47uF	20%	63V
C129	1-128-552-11	ELECT	47uF	20%	63V
C133	1-136-165-00	FILM	0.1uF	5%	50V

Ref. No.	Part No.	Description			Remark
C134	1-136-165-00	FILM	0.1uF	5%	50V
C137	1-162-927-11	CERAMIC CHIP	100PF	5%	50V
C138	1-162-927-11	CERAMIC CHIP	100PF	5%	50V
C139	1-162-927-11	CERAMIC CHIP	100PF	5%	50V
C140	1-162-927-11	CERAMIC CHIP	100PF	5%	50V
C141	1-162-927-11	CERAMIC CHIP	100PF	5%	50V
C142	1-162-927-11	CERAMIC CHIP	100PF	5%	50V
C143	1-162-927-11	CERAMIC CHIP	100PF	5%	50V
C144	1-162-927-11	CERAMIC CHIP	100PF	5%	50V
C147	1-165-908-11	CERAMIC CHIP	1uF	10%	10V
C148	1-165-908-11	CERAMIC CHIP	1uF	10%	10V
C149	1-165-908-11	CERAMIC CHIP	1uF	10%	10V
		< DIODE >			
D001	8-719-914-43	DIODE DAN202K			
D002	8-719-988-61	DIODE 1SS355TE-17			
D003	8-719-988-61	DIODE 1SS355TE-17			
		< IC >			
IC001	6-702-296-01	IC NJM79M09DL1A-TE1			
IC002	6-700-792-01	IC NJM78M09DL1A (TE1)			
IC003	8-759-052-52	IC L78M05T-FA			
IC004	8-759-679-55	IC SN74LVC08APWR			
IC006	6-707-237-01	IC PCM1791ADBR			
IC007	6-707-237-01	IC PCM1791ADBR			
IC008	6-707-237-01	IC PCM1791ADBR			
IC009	8-759-656-83	IC NJM4580MD-(TE2)			
IC010	8-759-656-83	IC NJM4580MD-(TE2)			
IC011	8-759-656-83	IC NJM4580MD-(TE2)			
		< JACK >			
J001	1-785-489-11	JACK, PIN 6P (5.1CH OUTPUT)			
J003	1-785-868-21	JACK, PIN 2P (AUDIO OUT L/R)			
		< TRANSISTOR >			
Q001	8-729-421-19	TRANSISTOR	UN2213		
Q002	8-729-921-80	TRANSISTOR	2SD1781K-T146-QR		
Q003	8-729-421-19	TRANSISTOR	UN2213		
Q004	8-729-045-17	TRANSISTOR	2SB1561T100Q		
Q005	8-729-010-29	TRANSISTOR	MSD601-RST1		
Q006	8-729-027-53	TRANSISTOR	DTC124TKA-T146		
Q007	8-729-027-53	TRANSISTOR	DTC124TKA-T146		
Q008	8-729-010-05	TRANSISTOR	MSB709-RT1		
Q009	8-729-010-05	TRANSISTOR	MSB709-RT1		
Q011	8-729-027-53	TRANSISTOR	DTC124TKA-T146		
Q013	8-729-010-05	TRANSISTOR	MSB709-RT1		
Q014	8-729-421-19	TRANSISTOR	UN2213		
Q015	8-729-421-19	TRANSISTOR	UN2213		
Q017	8-729-421-19	TRANSISTOR	UN2213		
Q018	6-551-287-01	TRANSISTOR	2SD2704K-T146		
Q019	6-551-287-01	TRANSISTOR	2SD2704K-T146		
Q020	6-551-287-01	TRANSISTOR	2SD2704K-T146		
Q021	6-551-287-01	TRANSISTOR	2SD2704K-T146		
Q022	6-551-287-01	TRANSISTOR	2SD2704K-T146		
Q023	6-551-287-01	TRANSISTOR	2SD2704K-T146		
		< RESISTOR >			
R002	1-216-809-11	METAL CHIP	100	5%	1/10W
R004	1-216-801-11	METAL CHIP	22	5%	1/10W
R007	1-216-801-11	METAL CHIP	22	5%	1/10W
R009	1-216-801-11	METAL CHIP	22	5%	1/10W

Ref. No.	Part No.	Description			Remark
R011	1-216-833-11	METAL CHIP	10K	5%	1/10W
R012	1-216-833-11	METAL CHIP	10K	5%	1/10W
R017	1-216-833-11	METAL CHIP	10K	5%	1/10W
R018	1-216-801-11	METAL CHIP	22	5%	1/10W
R019	1-216-833-11	METAL CHIP	10K	5%	1/10W
R020	1-216-833-11	METAL CHIP	10K	5%	1/10W
R021	1-216-841-11	METAL CHIP	47K	5%	1/10W
R022	1-216-864-11	SHORT CHIP	0		
R023	1-216-845-11	METAL CHIP	100K	5%	1/10W
R024	1-216-849-11	METAL CHIP	220K	5%	1/10W
R028	1-216-833-11	METAL CHIP	10K	5%	1/10W
R029	1-216-841-11	METAL CHIP	47K	5%	1/10W
R031	1-216-833-11	METAL CHIP	10K	5%	1/10W
R032	1-216-833-11	METAL CHIP	10K	5%	1/10W
R034	1-216-833-11	METAL CHIP	10K	5%	1/10W
R035	1-216-833-11	METAL CHIP	10K	5%	1/10W
R036	1-216-833-11	METAL CHIP	10K	5%	1/10W
R038	1-216-833-11	METAL CHIP	10K	5%	1/10W
R077	1-216-809-11	METAL CHIP	100	5%	1/10W
R078	1-216-809-11	METAL CHIP	100	5%	1/10W
R080	1-216-809-11	METAL CHIP	100	5%	1/10W
R081	1-216-657-11	METAL CHIP	1.8K	0.5%	1/10W
R082	1-216-657-11	METAL CHIP	1.8K	0.5%	1/10W
R083	1-216-657-11	METAL CHIP	1.8K	0.5%	1/10W
R084	1-216-657-11	METAL CHIP	1.8K	0.5%	1/10W
R085	1-216-657-11	METAL CHIP	1.8K	0.5%	1/10W
R086	1-216-657-11	METAL CHIP	1.8K	0.5%	1/10W
R087	1-216-657-11	METAL CHIP	1.8K	0.5%	1/10W
R088	1-216-657-11	METAL CHIP	1.8K	0.5%	1/10W
R093	1-216-657-11	METAL CHIP	1.8K	0.5%	1/10W
R094	1-216-657-11	METAL CHIP	1.8K	0.5%	1/10W
R095	1-216-657-11	METAL CHIP	1.8K	0.5%	1/10W
R096	1-216-657-11	METAL CHIP	1.8K	0.5%	1/10W
R103	1-216-663-11	METAL CHIP	3.3K	0.5%	1/10W
R104	1-216-647-11	METAL CHIP	680	0.5%	1/10W
R105	1-216-647-11	METAL CHIP	680	0.5%	1/10W
R106	1-216-663-11	METAL CHIP	3.3K	0.5%	1/10W
R107	1-216-663-11	METAL CHIP	3.3K	0.5%	1/10W
R108	1-216-647-11	METAL CHIP	680	0.5%	1/10W
R109	1-216-647-11	METAL CHIP	680	0.5%	1/10W
R110	1-216-663-11	METAL CHIP	3.3K	0.5%	1/10W
R111	1-216-663-11	METAL CHIP	3.3K	0.5%	1/10W
R112	1-216-647-11	METAL CHIP	680	0.5%	1/10W
R113	1-216-647-11	METAL CHIP	680	0.5%	1/10W
R114	1-216-663-11	METAL CHIP	3.3K	0.5%	1/10W
R115	1-216-663-11	METAL CHIP	3.3K	0.5%	1/10W
R116	1-216-647-11	METAL CHIP	680	0.5%	1/10W
R117	1-216-647-11	METAL CHIP	680	0.5%	1/10W
R118	1-216-663-11	METAL CHIP	3.3K	0.5%	1/10W
R129	1-216-663-11	METAL CHIP	3.3K	0.5%	1/10W
R130	1-216-647-11	METAL CHIP	680	0.5%	1/10W
R131	1-216-647-11	METAL CHIP	680	0.5%	1/10W
R132	1-216-663-11	METAL CHIP	3.3K	0.5%	1/10W
R133	1-216-663-11	METAL CHIP	3.3K	0.5%	1/10W
R134	1-216-647-11	METAL CHIP	680	0.5%	1/10W
R135	1-216-647-11	METAL CHIP	680	0.5%	1/10W
R136	1-216-663-11	METAL CHIP	3.3K	0.5%	1/10W
R137	1-208-774-11	METAL CHIP	470	0.5%	1/10W
R138	1-208-774-11	METAL CHIP	470	0.5%	1/10W
R139	1-208-774-11	METAL CHIP	470	0.5%	1/10W

Ref. No.	Part No.	Description			Remark
R140	1-208-774-11	METAL CHIP	470	0.5%	1/10W
R141	1-208-774-11	METAL CHIP	470	0.5%	1/10W
R142	1-208-774-11	METAL CHIP	470	0.5%	1/10W
R143	1-208-822-11	METAL CHIP	47K	0.5%	1/10W
R144	1-208-822-11	METAL CHIP	47K	0.5%	1/10W
R145	1-208-822-11	METAL CHIP	47K	0.5%	1/10W
R146	1-208-822-11	METAL CHIP	47K	0.5%	1/10W
R149	1-208-822-11	METAL CHIP	47K	0.5%	1/10W
R150	1-208-822-11	METAL CHIP	47K	0.5%	1/10W
R153	1-216-829-11	METAL CHIP	4.7K	5%	1/10W
R154	1-216-829-11	METAL CHIP	4.7K	5%	1/10W
R155	1-216-829-11	METAL CHIP	4.7K	5%	1/10W
R156	1-216-829-11	METAL CHIP	4.7K	5%	1/10W
R157	1-216-829-11	METAL CHIP	4.7K	5%	1/10W
R158	1-216-829-11	METAL CHIP	4.7K	5%	1/10W
R161	1-216-845-11	METAL CHIP	100K	5%	1/10W
R162	1-216-845-11	METAL CHIP	100K	5%	1/10W
R163	1-216-845-11	METAL CHIP	100K	5%	1/10W
R165	1-208-774-11	METAL CHIP	470	0.5%	1/10W
R166	1-208-774-11	METAL CHIP	470	0.5%	1/10W
R167	1-208-774-11	METAL CHIP	470	0.5%	1/10W
R168	1-208-774-11	METAL CHIP	470	0.5%	1/10W
R169	1-208-774-11	METAL CHIP	470	0.5%	1/10W
R170	1-208-774-11	METAL CHIP	470	0.5%	1/10W
R171	1-208-774-11	METAL CHIP	470	0.5%	1/10W
R173	1-208-774-11	METAL CHIP	470	0.5%	1/10W
R175	1-216-864-11	SHORT CHIP	0		
R176	1-216-864-11	SHORT CHIP	0		
R177	1-216-864-11	SHORT CHIP	0		
R178	1-216-809-11	METAL CHIP	100	5%	1/10W

A-1334-392-A FL-180 BOARD, COMPLETE

(Ref. No. 2000 Series)

****

< CAPACITOR >

C101	1-117-681-11	ELECT CHIP	100uF	20%	16V
C102	1-107-826-11	CERAMIC CHIP	0.1uF	10%	16V
C107	1-107-726-91	CERAMIC CHIP	0.01uF	10%	16V
C109	1-117-681-11	ELECT CHIP	100uF	20%	16V
C110	1-107-826-11	CERAMIC CHIP	0.1uF	10%	16V
C111	1-163-021-91	CERAMIC CHIP	0.01uF	10%	50V
C113	1-107-715-11	ELECT	22uF	20%	50V
C114	1-115-339-11	CERAMIC CHIP	0.1uF	10%	50V
C115	1-115-339-11	CERAMIC CHIP	0.1uF	10%	50V
C116	1-115-339-11	CERAMIC CHIP	0.1uF	10%	50V
C117	1-107-726-91	CERAMIC CHIP	0.01uF	10%	16V
C118	1-107-726-91	CERAMIC CHIP	0.01uF	10%	16V
C119	1-107-826-11	CERAMIC CHIP	0.1uF	10%	16V
C200	1-107-726-91	CERAMIC CHIP	0.01uF	10%	16V
C201	1-127-573-11	CERAMIC CHIP	1uF	10%	16V
C202	1-107-826-11	CERAMIC CHIP	0.1uF	10%	16V
C203	1-128-994-21	ELECT CHIP	47uF	20%	10V
C204	1-107-826-11	CERAMIC CHIP	0.1uF	10%	16V
C205	1-107-726-91	CERAMIC CHIP	0.01uF	10%	16V
C206	1-107-726-91	CERAMIC CHIP	0.01uF	10%	16V
C207	1-107-726-91	CERAMIC CHIP	0.01uF	10%	16V
C209	1-107-726-91	CERAMIC CHIP	0.01uF	10%	16V
C210	1-165-989-11	CERAMIC CHIP	10uF	10%	6.3V

Ref. No.	Part No.	Description	Remark
		< CONNECTOR >	
CN102	1-785-468-41	CONNECTOR, FFC/FPC 13P	
CN200	1-774-730-21	PIN, CONNECTOR (PC BOARD) 3P	
CN202	1-785-466-41	CONNECTOR, FFC/FPC 7P	
		< DIODE >	
D103	6-501-476-01	DIODE NSSW008CT-T071 (LED Blue)	
D104	6-501-476-01	DIODE NSSW008CT-T071 (LED Blue)	
D107	8-719-988-61	DIODE 1SS355TE-17	
D108	8-719-988-61	DIODE 1SS355TE-17	
D109	8-719-988-61	DIODE 1SS355TE-17	
D110	8-719-988-61	DIODE 1SS355TE-17	
D111	8-719-036-94	DIODE RD5.6SB-T1	
D201	8-719-988-61	DIODE 1SS355TE-17	
		< FUSE >	
⚠F100	1-576-863-21	FUSE 0.5A 32V	
		< IC >	
IC100	6-701-729-01	IC PT6315	
IC201	6-703-591-01	IC BH6578FVM-TR	
		< COIL >	
L100	1-414-743-21	INDUCTOR 47uH	
		< FLUORESCENT INDICATOR TUBE >	
* ND100	1-519-974-11	INDICATOR TUBE, FLUORESCENT	
		< TRANSISTOR >	
Q101	8-729-027-46	TRANSISTOR DTC114YKA-T146	
Q106	6-551-382-01	TRANSISTOR RSS040P03FD5TB	
Q107	8-729-901-88	TRANSISTOR 2SC2411K-CR	
Q108	8-729-901-88	TRANSISTOR 2SC2411K-CR	
		< RESISTOR >	

R100	1-216-833-11	METAL CHIP	10K	5%	1/10W
R102	1-216-814-11	METAL CHIP	270	5%	1/10W
R103	1-216-814-11	METAL CHIP	270	5%	1/10W
R105	1-216-805-11	METAL CHIP	47	5%	1/10W
R107	1-216-805-11	METAL CHIP	47	5%	1/10W
R108	1-216-805-11	METAL CHIP	47	5%	1/10W
R112	1-216-845-11	METAL CHIP	100K	5%	1/10W
R114	1-216-824-11	METAL CHIP	1.8K	5%	1/10W
R115	1-216-838-11	METAL CHIP	27K	5%	1/10W
R120	1-218-871-11	METAL CHIP	10K	0.5%	1/10W
R122	1-216-839-11	METAL CHIP	33K	5%	1/10W
R123	1-216-834-11	METAL CHIP	12K	5%	1/10W
R124	1-218-871-11	METAL CHIP	10K	0.5%	1/10W
R125	1-216-824-11	METAL CHIP	1.8K	5%	1/10W
R126	1-216-825-11	METAL CHIP	2.2K	5%	1/10W
R127	1-216-832-11	METAL CHIP	8.2K	5%	1/10W
R128	1-216-834-11	METAL CHIP	12K	5%	1/10W
R129	1-216-832-11	METAL CHIP	8.2K	5%	1/10W
R130	1-216-834-11	METAL CHIP	12K	5%	1/10W

The components identified by mark ⚠ or dotted line with mark ⚠ are critical for safety. Replace only with part number specified.	Les composants identifiés par une marque ⚠ sont critiques pour la sécurité. Ne les remplacer que par une pièce portant le numéro spécifié.

Ref. No.	Part No.	Description			Remark
R132	1-216-837-11	METAL CHIP	22K	5%	1/10W
R200	1-216-837-11	METAL CHIP	22K	5%	1/10W
R201	1-216-809-11	METAL CHIP	100	5%	1/10W
R202	1-216-839-11	METAL CHIP	33K	5%	1/10W
R203	1-216-836-11	METAL CHIP	18K	5%	1/10W
R204	1-216-837-11	METAL CHIP	22K	5%	1/10W
R206	1-216-845-11	METAL CHIP	100K	5%	1/10W
R207	1-216-833-11	METAL CHIP	10K	5%	1/10W
R208	1-216-837-11	METAL CHIP	22K	5%	1/10W
R210	1-216-809-11	METAL CHIP	100	5%	1/10W
R211	1-216-809-11	METAL CHIP	100	5%	1/10W
R212	1-216-821-11	METAL CHIP	1K	5%	1/10W
R213	1-216-864-11	SHORT CHIP	0		
R214	1-216-864-11	SHORT CHIP	0		
R215	1-216-837-11	METAL CHIP	22K	5%	1/10W
R216	1-216-837-11	METAL CHIP	22K	5%	1/10W
R217	1-216-809-11	METAL CHIP	100	5%	1/10W
R218	1-216-809-11	METAL CHIP	100	5%	1/10W
R219	1-216-809-11	METAL CHIP	100	5%	1/10W
R220	1-216-809-11	METAL CHIP	100	5%	1/10W
R221	1-216-809-11	METAL CHIP	100	5%	1/10W
R224	1-216-833-11	METAL CHIP	10K	5%	1/10W
R225	1-216-833-11	METAL CHIP	10K	5%	1/10W
R226	1-216-857-11	METAL CHIP	1M	5%	1/10W
R227	1-216-809-11	METAL CHIP	100	5%	1/10W
		< SWITCH >			
S100	1-771-410-21	SWITCH, TACTIL (I/1)			
		< TRANSFORMER >			
*⚠T100	1-445-303-11	TRANSFORMER, DC-DC CONVERTER			
	A-1334-394-A	FR-276 BOARD, COMPLETE (Ref. No. 1000 Series)			
		**********			
		< CAPACITOR >			
C601	1-107-726-91	CERAMIC CHIP	0.01uF	10%	16V
C602	1-128-994-21	ELECT CHIP	47uF	20%	10V
C605	1-107-726-91	CERAMIC CHIP	0.01uF	10%	16V
		< CONNECTOR >			
CN601	1-785-468-41	CONNECTOR, FFC/FPC 13P			
		< DIODE >			
* D601	6-501-546-11	DIODE NSPW-310BST-A0S (FL OFF)			
* D602	6-501-546-11	DIODE NSPW-310BST-A0S (HD)			
* D603	6-501-546-11	DIODE NSPW-310BST-A0S (HDMI)			
		< IC >			
IC601	6-600-392-01	IC GP1UM27XK0SF			

Ref. No.	Part No.	Description			Remark
		< TRANSISTOR >			
Q601	8-729-027-46	TRANSISTOR	DTC114YKA-T146		
Q602	8-729-027-46	TRANSISTOR	DTC114YKA-T146		
Q603	8-729-027-46	TRANSISTOR	DTC114YKA-T146		
Q611	8-729-028-27	TRANSISTOR	2SK2009 (TE85L)		
		< RESISTOR >			
R601	1-216-825-11	METAL CHIP	2.2K	5%	1/10W
R602	1-216-822-11	METAL CHIP	1.2K	5%	1/10W
R603	1-216-822-11	METAL CHIP	1.2K	5%	1/10W
R610	1-216-805-11	METAL CHIP	47	5%	1/10W
R614	1-216-833-11	METAL CHIP	10K	5%	1/10W
R617	1-216-824-11	METAL CHIP	1.8K	5%	1/10W
R618	1-216-825-11	METAL CHIP	2.2K	5%	1/10W
R619	1-216-832-11	METAL CHIP	8.2K	5%	1/10W
R620	1-216-832-11	METAL CHIP	8.2K	5%	1/10W
R621	1-216-834-11	METAL CHIP	12K	5%	1/10W
R622	1-216-834-11	METAL CHIP	12K	5%	1/10W
R623	1-216-834-11	METAL CHIP	12K	5%	1/10W
R631	1-216-809-11	METAL CHIP	100	5%	1/10W
		< SWITCH >			
S600	1-771-410-21	SWITCH, TACTIL (UP/DOWN)			
S601	1-771-410-21	SWITCH, TACTIL (OPEN/CLOSE)			
S602	1-771-410-21	SWITCH, TACTIL (.)			
S603	1-771-410-21	SWITCH, TACTIL (>)			
S604	1-771-410-21	SWITCH, TACTIL (X)			
S605	1-771-410-21	SWITCH, TACTIL (x)			
S606	1-771-410-21	SWITCH, TACTIL (H)			
		IR-063 BOARD (Ref. No. 1000 Series)			
		**********			
		< CONNECTOR >			
CN501	1-770-593-41	CONNECTOR, BOARD TO BOARD 5P			
		MAIN BOARD			
		**********			
🔒	A-1439-317-A	PWB, MOUNTED (US, CND)			
🔒	A-1439-318-A	PWB, MOUNTED (AEP, UK)			
🔒	A-1439-319-A	PWB, MOUNTED (RUS)			
🔒	A-1439-320-A	PWB, MOUNTED (AUS)			

The components identified by mark ⚠ or dotted line with mark ⚠ are critical for safety. Replace only with part number specified.

Les composants identifiés par une marque ⚠ sont critiques pour la sécurité. Ne les remplacer que par une pièce portant le numéro spécifié.

The components identified by mark 🔒 contain confidential information. Strictly follow the instructions whenever the components are repaired and/or replaced.

Les composants identifiés par la marque 🔒 contiennent des informations confidentielles. Suivre scrupuleusement les instructions chaque fois qu'un composant est remplacé et / ou réparé.

Ref. No.	Part No.	Description	Remark
		MISCELLANEOUS PARTS	
		**********	
⚠104	1-474-057-41	POWER BLOCK (ZSSR641GA) (US, CND)	
⚠104	1-474-057-51	POWER BLOCK (ZSSR641IA)	(AEP, UK, RUS, AUS)
57	1-787-625-21	FAN, DC	
* 59	1-834-510-11	CABLE, FLEXIBLE FLAT (FLR-013)	
103	1-834-511-11	CABLE, FLEXIBLE FLAT (FML-004)	
54	A-1337-676-A	DRIVE (SOEM (SERVICE USE R1)) (US, CND)	
54	A-1337-677-A	DRIVE (SOEM (SERVICE USE R2)) (AEP, UK)	
54	A-1337-678-A	DRIVE (SOEM (SERVICE USE R4)) (AUS)	
54	A-1382-236-A	DRIVE (SOEM (SERVICE USE R5)) (RUS)	
* 61	1-965-671-11	HARNESS (MBD-005) (US, CND)	
* 61	1-965-672-11	HARNESS (MBD-006) (AEP, UK, RUS, AUS)	
		ACCESSORIES & PACKING MATERIALS	
		**********	
	1-479-848-31	REMOTE COMMANDER (RMT-B101A)	(US, CND)
	1-480-207-21	REMOTE COMMANDER (RMT-B101P)	(AEP, UK, RUS, AUS)
⚠	1-555-074-52	CORD, POWER (AUS)	
⚠	1-575-131-82	CORD, POWER (AEP, RUS)	
	1-776-263-22	CORD, CONNECTION	
⚠	1-823-701-11	CORD, POWER (US, CND)	
⚠	1-827-269-12	CORD, POWER (UK)	
	3-270-909-11	MANUAL, INSTRUCTION (ENGLISH) (US, CND)	
	3-270-909-21	MANUAL, INSTRUCTION (FRENCH) (CND)	
	3-270-910-11	MANUAL, INSTRUCTION (ENGLISH) (UK, AUS)	
	3-270-910-21	MANUAL, INSTRUCTION (FRENCH) (AEP)	
	3-270-910-31	MANUAL, INSTRUCTION (GERMAN) (AEP)	
	3-270-910-41	MANUAL, INSTRUCTION (ITALIAN) (AEP)	
	3-270-910-51	MANUAL, INSTRUCTION (SPANISH) (AEP)	
	3-270-910-61	MANUAL, INSTRUCTION (DUTCH) (AEP)	
	3-270-910-71	MANUAL, INSTRUCTION (SWEDISH) (AEP)	
	3-270-910-81	MANUAL, INSTRUCTION (RUSSIAN) (RUS)	

The components identified by mark ⚠ or dotted line with mark ⚠ are critical for safety. Replace only with part number specified.	Les composants identifiés par une marque ⚠ sont critiques pour la sécurité. Ne les remplacer que par une pièce portant le numéro spécifié.

Sony Corporation
Home Electronics Network Company
9-883-968-22
2007J0500-1
© 2007. 10
Published by Quality Assurance Dept.

REVISION HISTORY

Ver.	Date	Description of Revision
1.0	2007.10	New
1.1	2008.1	Addition of PWB,MOUNT CORNER(S)COMPL