SONY

ANALOG TAPE RECORDER

APR-5001
APR-5002
APR-5003V
Series

OPERATION AND MAINTENANCE MANUAL

1st Edition (Revised 1)

APR-5001 Serial No.10001 and Higher

APR-5002 Serial No.20001 and Higher

APR-5003V Serial No.10001 and Higher

APR-5001/5002/5003V
3-711-352-02

Sony Corporation
© 1989

Printed in Japan
1989. 4 11

SONY

A U D I O T A P E D I S C L A I M E R

N O T E : THE AUDIO TAPE SUPPLIED BY THE FACTORY WITH THIS MACHINE HAS BEEN USED FOR FINAL RECORD ALIGNMENT AND AUTOMATED SPECIFICATIONS TESTING ONLY.

CONFIDENTIAL

The material contained in this manual consists of information that is the property of Sony Corporation and is intended solely for use by the purchasers of the equipment described in this manual.
Sony Corporation expressly prohibits the duplication of any portion of this manual or the use thereof for any purpose other than the operation or maintenance of the equipment described in this manual without the express written permission of Sony Corporation.

CONFIDENTIEL

Le matériel contenu dans ce manuel consiste en informations qui sont la propriété de Sony Corporation et sont destinées exclusivement à l'usage des acquéreurs dé l'equipement décrit dans ce manuel.
Sony Corporation interdit formellement la copie de quelque partie que ce soit de ce manuel ou son emploi pour tout autre but que des opérations ou entretiens de l'équipement à moins d'une permission écrite de Sony Corporation.

VERTRAULICH

Das in dieser Anleitung enthaltene Material besteht aus Informationen, die Eigentum der Sony Corporation sind, und ausschließlich zum Gebrauch durch den Kaufer der in dieser Anleitung beschriebenen Ausrustung bestimmt sind.
Die Sony Corporation untersagt ausdrücklich die Vervielfaltigung jeglicher Teile dieser Anleitung order den Gebrauch derselben fur irgendeinen Zweck als die Bedienung order Wartung der in dieser Anleitung beschriebenen Ausrüstung ohne ausdrückliche schriftliche Erlaubnis der Sony Corporation.

WARNING

This equipment generates, uses, and can radiate radio frequency energy and, if not installed and used in accordance with the instuction manual, may cause interference to radio communications. It has been tested and found to comply with the limits for a Class A computing device pursuant to Subpart J of Part 15 of FCC Rules, which are designed to provide reasonable protection against such interference when operated in a commercial environment. Operation of this equipment in a residential area is likely to cause interference, in which case the user, at his own expense, will be required to take whatever measures may be required to correct the interference.

THIS APPARATUS COMPLIES WITH THE CLASS A LIMITS FOR RADIO NOISE EMISSIONS SET OUT IN RADIO INTERFERENCE REGULATIONS.

CET APPAREIL EST CONFORME AUX NORMES CLASS A, POUR BRUITS RADIOELECTRIQUES, TEL QUE SPECIFIER DANS LE REGLEMENT SUR LE BROUILLAGE RADIOELECTRIQUE.

APR-5000 SERIES PROGRAM PRESET DATA SHEET

PRESET GROUPING 1 ✓ 2 ____ 3 ____

SPEED

HIGH
TAPE TYPE Scotch 226
FLUXIVITY 250 nW/m
EQ STD AES
OVERBIAS 2 dB@ 10 kHz

MID
TAPE TYPE Scotch 226
FLUXIVITY 250 nW/m
EQ STD NAB
OVERBIAS 3 dB@ 10 kHz

LOW
TAPE TYPE Scotch 226
FLUXIVITY 250 nW/m
EQ STD NAB
OVERBIAS 3 dB@ 10 kHz

HEADSTACK IDENTITY

MONO
1/4" A ____ or B ____

TWO TRACK NAB ✓ or DIN ____
1/4" A ____ B ____ C ____ or D ____
1/2" A ____ or B ____

THREE TRACK
1/4" A ✓ or B ____
1/2" A ____ or B ____

SPEED RANGE HI ✓ or LOW ____

SPEED	REPRO LEVEL TK1/TK2/TK3	REPRO L. FREQ TK1/TK2/TK3	REPRO H. FREQ TK1/TK2/TK3	SYNC LEVEL TK1/TK2/TK3	SYNC L. FREQ TK1/TK2/TK3	SYNC H. FREQ TK1/TK2/TK3
HIGH	2d/37/___	78/8c/___	2b/22/___	31/38/60	75/8b/FF	25/1d/00
MID	2c/35/___	6c/80/___	83/6b/___	30/35/6c	6A/7A/FF	79/67/00
LOW	30/39/___	4d/5b/___	8d/74/___	33/37/6A	48/55/FF	A2/89/00

SPEED	INPUT MON. LEVEL TK1/TK2/TK3	RECORD LEVEL TK1/TK2/TK3	RECORD H. FREQ TK1/TK2/TK3	BIAS LEVEL TK1/TK2/TK3
HIGH	44/39/31	30/32/20	2c/33/FF	89/81/30
MID	4A/3E/1d	2c/2E/35	49/5d/FF	72/68/20
LOW	50/40/0c	28/2c/61	3c/6F/FF	53/48/10

SPEED	EQ STD NAB or IEC (AES)	RGC TK1-TK2/TK3	SGC TK1-TK2/TK3	RCF TK1-TK2/TK3	RCB TK1-TK2/TK3
HIGH	____ or ✓	c1/___	c1/c0	c0/c0	c1/c0
MID	✓ or ____	cA/___	cc/c3	c9/c0	c5/c0
LOW	✓ or ____	cb/___	cE/c3	c3/c0	c3/c0

FORM 0287-B

SONY PRO AUDIO QUALITY ASSURANCE
APR-5000
1/4 INCH 2TRACK HI SPEED NAB
HEAD ALLOY STD
SPEED 30 IPS
TECHNICIAN: Barbara 9/19/89
MACHINE OR SERIAL #: 11005

*** AZIMUTH ***

FREQ (Hz)				AVG (Deg)
15800.0	9.0	10.0	9.0	9.3
11800.0	3.0	6.0	3.0	4.0
5700.0	3.0	2.0	3.0	2.7
2800.0	3.0	3.0	3.0	3.0

*** FREQUENCY RESPONSE ***

INPUT REF = +4dB
SPECS: 50Hz TO 28KHz +0.75, -3.0dB

FREQ (Hz)	CH 1 (dB)	CH 2 (dB)
27000	-1.40	-1.70
25000	-1.10	-1.50
20000	-0.20	-0.60
16500	0.10	-0.40
13000	0.20	-0.10
10000	0.20	-0.20
8800	0.20	-0.20
4000	-0.10	-0.20
2000	-0.10	-0.10
1000	0.00	0.00
500	0.00	0.10
250	-0.10	0.00
130	-0.50	-0.40
65	-0.50	-0.40
40	-6.10	-6.30
31	-10.30	-10.40

** DISTORTION **

REF 250nWb/M

	CH 1	CH 2
OUTPUT LEVEL	3.90	3.90 dB
3RD DISTORTION	0.054	0.120 %

** NOISE **

REF 250nWb/M
SPECS: UNW = -59 dB, WTD = -64 dB

NS UNW NAB	-63.9	-63.7 dB
NS WTD NAB	-66.9	-67.0 dB

** CHANNEL SEPARATION **

-55.2 dB AT 1KHz

** FLUTTER **

SPECS: WTD < .025 %
FLUTTER WTD (AVG) 0.017 %

** DEPTH OF ERASE **

REF 510nWb/M
SPECS: <-76
CH 1 @1KHz (Avg) -83.3 dB
CH 2 @1KHz (Avg) -92.1 dB

SONY PRO AUDIO QUALITY ASSURANCE
APR-5000
1/4 INCH 2TRACK HI SPEED NAB
HEAD ALLOY STD
SPEED 15 IPS
TECHNICIAN: Barbara 9/19/89
MACHINE OR SERIAL #: 11005

*** AZIMUTH ***

FREQ (Hz)				AVG (Deg)
15800.0	1.0	8.0	3.0	4.0
11800.0	-1.0	3.0	1.0	1.0
5700.0	-1.0	1.0	4.0	1.3
2800.0	2.0	3.0	3.0	2.7

*** FREQUENCY RESPONSE ***

INPUT REF = +4dB
SPECS: 30Hz TO 24KHz +0.75, -2.0dB

FREQ (Hz)	CH 1 (dB)	CH 2 (dB)
27000	-1.70	-2.60
25000	-1.20	-2.20
20000	0.00	-0.90
16500	0.30	-0.50
13000	0.30	-0.30
10000	0.30	-0.10
8800	0.20	-0.10
4000	0.20	0.00
2000	0.10	0.00
1000	0.00	0.00
500	0.00	0.00
250	0.00	0.00
130	-0.20	-0.10
65	-0.50	-0.60
40	0.50	0.40
31	-0.60	-0.60

** DISTORTION **

REF 250nWb/M

	CH 1	CH 2
OUTPUT LEVEL	4.20	4.20 dB
3RD DISTORTION	0.052	0.074 %

** NOISE **

REF 250nWb/M
SPECS: UNW = -56 dB, WTD = -61 dB

NS UNW NAB	-58.9	-59.0 dB
NS WTD NAB	-62.2	-62.2 dB

** CHANNEL SEPARATION **
-56.9 dB AT 1KHz

** FLUTTER **
SPECS: WTD < .035 %
FLUTTER WTD (AVG) 0.016 %

** DEPTH OF ERASE **
REF 510nWb/M
SPECS: <-76
CH 1 @1KHz (Avg) -93.8 dB
CH 2 @1KHz (Avg) -94.2 dB

SONY PRO AUDIO QUALITY ASSURANCE
APR-5000
1/4 INCH 2TRACK HI SPEED NAB
HEAD ALLOY STD
SPEED 7.5 IPS
TECHNICIAN: Barbara 9/19/89
MACHINE OR SERIAL #: 11005

*** AZIMUTH ***

FREQ (Hz)				AVG (Deg)
15800.0	-6.0	-7.0	-11.0	-8.0
11800.0	-2.0	1.0	-8.0	-3.0
5700.0	4.0	2.0	0.0	2.0
2800.0	4.0	4.0	2.0	3.3

*** FREQUENCY RESPONSE ***

INPUT REF = -6dB
SPECS: 30Hz TO 20KHz +0.75, -2.0dB

FREQ (Hz)	CH 1 (dB)	CH 2 (dB)
27000	-2.40	-2.40
25000	-1.70	-1.80
20000	0.00	-0.30
16500	0.30	-0.10
13000	0.40	0.10
10000	0.00	0.20
8800	0.30	0.10
4000	0.10	0.20
2000	0.00	0.00
1000	0.00	0.00
500	0.10	0.20
250	0.20	0.30
130	0.40	0.50
65	0.50	0.60
40	0.00	0.00
31	0.30	0.30

** DISTORTION **

REF 250nWb/M

	CH 1	CH 2
OUTPUT LEVEL	3.90	3.90 dB
3RD DISTORTION	0.140	0.150 %

** NOISE **

REF 250nWb/M
SPECS: UNW = -56 dB, WTD = -61 dB

NS UNW NAB	-59.5	-59.4 dB
NS WTD NAB	-62.9	-62.8 dB

** CHANNEL SEPARATION **

-56.7 dB AT 1KHz

** FLUTTER **

SPECS: WTD < .055 %
FLUTTER WTD (AVG) 0.024 %

** DEPTH OF ERASE **

REF 510nWb/M
SPECS: <-76
CH 1 @1KHz (Avg) -94.2 dB
CH 2 @1KHz (Avg) -92.6 dB

PROGRAM PRESET CHART

The blank form should be copied and used for writing down the values of the program presets for each headstack.

APR-5000 SERIES PROGRAM PRESET DATA SHEET

PRESET GROUPING 1 _____ 2 _____ 3 _____

SPEED

HIGH
TAPE TYPE _____
FLUXIVITY _____ nW/m
EQ STD _____
OVERBIAS _____ dB@ _____ kHz

MID
TAPE TYPE _____
FLUXIVITY _____ nW/m
EQ STD _____
OVERBIAS _____ dB@ _____ kHz

LOW
TAPE TYPE _____
FLUXIVITY _____ nW/m
EQ STD _____
OVERBIAS _____ dB@ _____ kHz

HEADSTACK IDENTITY

MONO
1/4" A ____ or B ____

TWO TRACK NAB ____ or DIN ____
1/4" A ____ B ____ C ____ or D ____
1/2" A ____ or B ____

THREE TRACK
1/4" A ____ or B ____
1/2" A ____ or B ____

SPEED RANGE HI ____ or LOW ____

SPEED	REPRO LEVEL TK1/TK2/TK3	REPRO L. FREQ TK1/TK2/TK3	REPRO H. FREQ TK1/TK2/TK3	SYNC LEVEL TK1/TK2/TK3	SYNC L. FREQ TK1/TK2/TK3	SYNC H. FREQ TK1/TK2/TK3
HIGH	___/___/___	___/___/___	___/___/___	___/___/___	___/___/___	___/___/___
MID	___/___/___	___/___/___	___/___/___	___/___/___	___/___/___	___/___/___
LOW	___/___/___	___/___/___	___/___/___	___/___/___	___/___/___	___/___/___

SPEED	INPUT MON. LEVEL TK1/TK2/TK3	RECORD LEVEL TK1/TK2/TK3	RECORD H. FREQ TK1/TK2/TK3	BIAS LEVEL TK1/TK2/TK3
HIGH	___/___/___	___/___/___	___/___/___	___/___/___
MID	___/___/___	___/___/___	___/___/___	___/___/___
LOW	___/___/___	___/___/___	___/___/___	___/___/___

SPEED	EQ STD NAB or IEC (AES)	RGC TK1-TK2/TK3	SGC TK1-TK2/TK3	RCF TK1-TK2/TK3	RCB TK1-TK2/TK3
HIGH	_____ or _____	___ ___/___	___ ___/___	___ ___/___	___ ___/___
MID	_____ or _____	___ ___/___	___ ___/___	___ ___/___	___ ___/___
LOW	_____ or _____	___ ___/___	___ ___/___	___ ___/___	___ ___/___

TWF6001-0287-B—85H/1M

APR-5000 SERIES ANALOG TAPE RECORDER OPTION

MB-5000 SIDE BRACKET INSTALLATION

INSTALLATION

To install the **MB-5000** Side Brackets to your tape machine perform the following procedure using the illustration shown below.

STEP 1 Remove existing screws from left and right side panels. (QTY 8)

STEP 2 Place insert panel on machine as shown in illustration.

STEP 3 Assemble the right bracket to the right side of the machine using screws and washers provided. (QTY 4)

STEP 4 Assemble the left bracket to the left side of the machine using screws and washers provided. (QTY 4)

STEP 5 Attach rear bracket to left and right side panels using screws and washers provided. (QTY 4)

CAUTION

It is not advisable to lift tape machine by the side brackets.

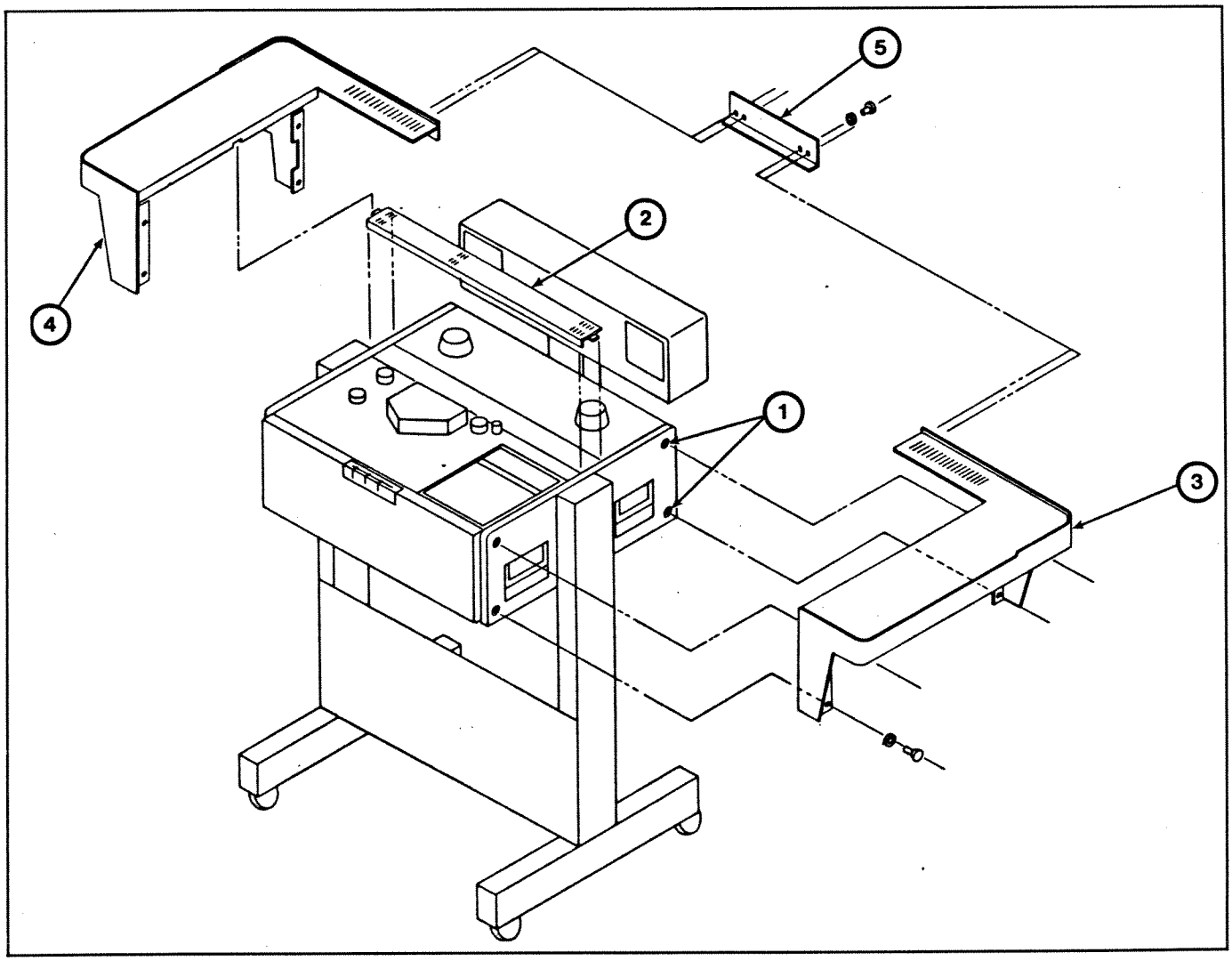

Figure 1. Installation of MB-5000 Side Brackets

MB-5000 PARTS LIST

Ref. No.	SONY Part No.	Description	Qty	Serv. Code
1	MB-5000	ASSY, Side Brackets	1	O
2*	3-703-225-11	Washer, Cosmetic M4	12	S
3	7-623-210-22	Washer, Split Lock, M4	28	S
4*	7-682-264-09	Screw, +k 4x14	12	S
5	7-684-024-04	Nut, Hex M4	28	S
6	7-688-004-11	Washer, Flat M4	28	S
7	T-9453-753-1	Bracket, Wrap Around Right	1	O
8	T-9453-754-1	Bracket, Wrap Around Left	1	O
9	T-9453-757-1	Top Panel, Right	1	O
10	T-9453-758-1	Top Panel, Left	1	O
11	T-9453-761-1	Bracket, Zee, Right	1	O
12	T-9453-762-1	Bracket, Zee, Left	1	O
13	T-9453-763-1	Bracket, Rear, Right	1	O
14	T-9453-764-1	Bracket, Rear, Left	1	O
15	T-9453-767-1	Bracket, Front, Right	1	O
16	T-9453-768-1	Bracket, Front, Left	1	O
17	T-9453-773-1	Bridge	1	O
18	T-9453-776-1	Insert Panel	1	O

*Not shown, used for outer cosmetic assembly. See Figure 1.

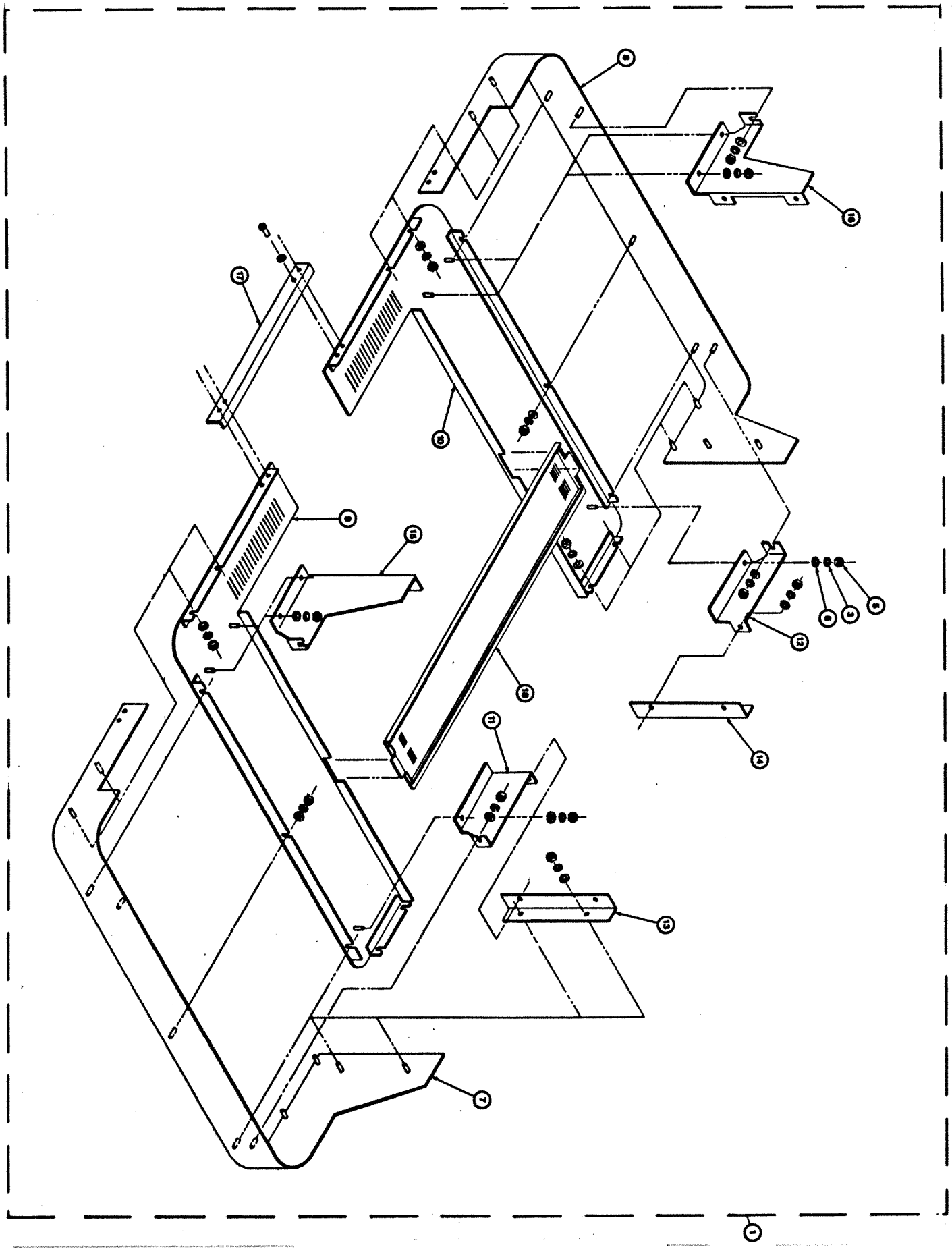

Figure 2. MB-5000 Assembly Drawing

APR-5000 Series

SOFTWARE UPDATE
VERSIONS P4.01.01.1 and P4.01.01.2

OPERATION AND MAINTENANCE SUPPLEMENT

T-9482-685-2

P4.02.01.5

ADDENDUM
TO
APR-5000 SERIES OPERATION AND MAINTENANCE SUPPLEMENT
T-9482-685-1
SOFTWARE UPGRADE TO VERSION P4.01.01.02

1. INTRODUCTION

Field reports indicate that some minor operational defects have been encountered in **APR-5000** machines equipped with Version P4.01.01.01 software. Because of this, **APR-5000** products now incorporate an upgraded software version, P4.01.01.2. This version fully corrects the following deficiencies.

a. CHASE and LOCATE Operations to EBU Time Code resulted in a search which corrected itself upon slewing to the target location. This was not a fatal defect, since the desired location was always correctly acquired.

b. A "Pre-Play" condition would not function from a LOCATE operation when the machine was supplied with a "frozen" external Time Code.

c. LOCATE operations occasionally became slightly inaccurate when the machine was supplied with external Time Code. This error was very small, never amounting to more than a few frames.

d. PLAY/STARTUP operation on machines using 1/2" tape format exhibited a momentary loss of tape tension under "unknown radius" conditions (immediately after tape break). This condition occurred only when there was a small radius on the take-up reel. For 1/4" tape machines, PLAY/STARTUP operations remained unaffected.

e. A timing flaw in the Time Code Longitudinal correction process caused occasional, sporadic errors to be injected into the recorded Time Code. These errors occurred only when using SMPTE-DF Time Codes, at 7 1/2 and and 15 IPS, from an external source. Time Code from the internal generator, EBU and SMPTE-ND Time Codes (at all speeds), and SMPTE-DF Time Code at 30 IPS, remained totally unaffected.

2. EFFECTIVITY

The new software will be incorporated in future production as follows:

APR-5001, -5002, -5002D, and **-5002W**	Serial Numbers 20811 and above
APR-5002H	Serial Numbers 20739 and above
APR-5003	Serial Numbers 21143 and above

3. FIRMWARE IDENTIFICATION

The new version firmware can be retrofitted by the user, the necessary Programmed PROM Set being identified by the SPPC Part Number T-9413-956-4.

SUPPLEMENT TO APR-5000 SERIES RECORDER/REPRODUCERS OPERATION AND MAINTENANCE MANUAL

VERSION P4.01.01.1 FIRMWARE

1. INTRODUCTION

The enhanced, Version P4.01.01.1 firmware described in this document offers three major advantages over previous versions in that it:

a. Is useable on all **APR-5000** Series machines

b. Resolves specific defects that occurred with earlier firmware versions

c. Incorporates new features into the **APR-5000** Series machines

As well as describing the firmware changes (paragraphs 2, 3 and 4), this document provides an updated Storage Location List (paragraph 5.)

2. COMPATIBILITY

With earlier firmware versions, different sets were required for different machines. Version P4.01.01.1, however, is compatible with all **APR-5000** machine types, these being:

APR-5001	Mono, High Speed
APR-5001L	Mono, Low Speed
APR-5002	Stereo, NAB, High Speed
APR-5002D	Stereo, DIN, High Speed
APR-5002H	Stereo, 1/2", High Speed
APR-5002L	Stereo, NAB, Low Speed
APR-5002W	Stereo, Wide Profile
APR-5003	Three Track, High Speed

3. CORRECTED DEFECTS

The enhanced software corrects many of the minor defects that occurred with earlier versions. The most significant of these corrections are listed below.

a. MVC operation is improved, particularly when operating under conditions of undefined radius.

b. A flaw in AUTO TC (Time Code) mode is corrected. With earlier firmware versions, EBU synchronous CHASE operations were compromised when receiving alternating types of Time Code.

c. Occasional false "loss of lock" indication in EBU CHASE is corrected.

d. Momentary "loss of lock" which previously occurred at repeatable Time Code boundaries during SMPTE Drop-Frame CHASE operations (and then only with specific OFFSET settings), now is corrected.

e. A previous condition which caused "latch-up" during regeneration of corrupted external Time Code has been corrected.

f. With previous software, a reverse motion Timer Roller count would jump directly to −1 second after passing through zero, causing a non-symmetric, non-monotonic Timer roller count at that point. A corrected −0 count has now been established between zero and −1.

g. The Repeat function has been made safe against incorrect user operation.

h. Supply reel hold back tension now is supplied in the DUMP EDIT mode.

i. Non-recognition of a Capstan Reference Select change on the 50 pin parallel port is now corrected. This previously occurred during brief transitional modes in preparation of PLAY action.

j. The FADER START/FADER START ENABLE inputs to the 50 pin parallel port are now functional. This operation is described in Section 3.3.7 of the **APR-5000** Series Operation and Maintenance manual.

4. IMPROVEMENTS AND NEW FEATURES

The improvements and new features obtained with the enhanced firmware are described in the following pages. Paragraphs 4.1 through 4.4 deal with the changes applicable to all machines, while paragraphs 4.5 through 4.12 deal with those applicable to **APR-5003** only.

4.1 PUNCH IN/PUNCH OUT OPERATION

Bias/Erase timing has been improved so as to virtually eliminate residual audio gaps in critical punch-in/punch-out operations. The performance improvement is best perceived in those areas involving punch-in and punch-out over identical, time-aligned program material.

4.2 STALLED TAKE-UP REEL DETECTION

The machine will now detect a stalled take-up reel in all PLAY modes. Upon detection, the machine will stop with the tape slack. To recover from this condition, the user must manually recover the slack tape and then press the STOP key to restore tape tension.

4.3 AUTO SHIFT DOWN OPERATION

Auto Shift Down operation now transfers the TAPE POSITION Display time to the LOCATE POSITION Display at the moment play operation is started, rather than when the PLAY key is pressed.

4.4 WIND SPEED AUDIO MONITORING

In addition to performing it's primary role, the Shield Defeat facility now provides the Global Audio Mute Defeat. This function previously was performed by the Lifter Defeat facility.

4.5 SELF-OPTIMIZING SYNCHRONIZATION SERVO WITH EXPANDED POWER-UP DIAGNOSTICS

The Synchronization Servo System in **APR-5003** machines now has a self- optimizing capability which significantly reduces "time-to-lock" over a number of operational variations. This capability compensates for absolute speed deviations in the external Time Code as well as the normal variations in the internal V-F (Voltage to Frequency) Converter centering alignment.

Further, a greater tolerence for Time Code disturbances, whether from the Master Time Code source or from internally reproduced Time Code, also has been incorporated. All of these factors lead to a significantly more robust synchronization system.

The Synchronization Servo assigns a correction factor to the V-F Converter in such a manner as to optimize lock time without regard to V-F alignment centering. A similar correction factor is assigned to take into account absolute speed errors in the external Time Code reference. During CHASE operations, the machine detects timing deviations and uses them as the basis for self-correction, thereby facilitating a more rapid 'time-to-lock".

To complement this new capability, a fourth power-up diagnostic has been added which cautions the user that calibration of the internal V-F Converter may be necessary. Correct centering of the V-F alignment ensures an accurate Vari-speed indication and provides the widest possible performance window for external Time Codes having absolute speed errors. On power-up, should an alignment error of greater than ± 5% be detected, the message "E004" will be displayed, together with a flashing STOP indication. The message can be cleared, and normal operation resumed, by pressing the STOP key.

The following improper CHASE operations, if performed immediately before power down, may give rise to the "E004" message at a subsequent power-up:

a. CHASE operation was performed at a Fixed Speed which was incorrect relative to the internally reproduced Time Code.

b. CHASE operation was performed with Time Code on tape that was recorded off-speed (on the **APR-5003**, recording Time Code in vari-speed mode is prohibited).

c. CHASE operation was attempted between Time Codes of different types, especially between types with significantly different frame rates.

d. CHASE operation was performed with a poorly engaging pinch roller or with a significant accumulation of debris on the capstan shaft.

Should the "E004" message appear, the following procedure is recommended. This procedure need not be carried out immediately, but can await the next convenient opportunity requiring use of the CHASE function.

a. Perform a correct CHASE operation as follows:

   i. Select AUTO TIMECODE mode (Set Storage LOCATION 30 TO 1)

   ii. Ensure that the Time Code tape has been recorded at a normal, crystal-controlled speed. If in doubt, use the **APR-5003** internal Time Code generator to stripe a tape.

   iii. Ensure that the external Time Code reference is of the same type as the Time Code on tape.

   iv. Ensure that the selected fixed speed is correct for the Time Code on tape.

   v. Perform the CHASE operation TWICE. Do not be alarmed should the first attempt to CHASE take a long time to achieve lock. This is a normal consequence of the Synchronization Servo Optimization process. Subsequent lock times will show substantial improvement.

b. Set the machine power switch to OFF and then back to ON.

c. If the "E004" message remains, a manual readjustment of the V-F converter may be necessary. (Refer to the **APR-5000** Operation and Maintenance manual, Section 6.5.16). This can be confirmed by listening for substantial pitch changes in program material when switching between fixed speed, and vari-speed operation at 00.0%

It should be noted that, where the new firmware is installed on machines previously used with earlier firmware revisions, this also may cause the "E004" message to appear on initial power-up.

Should significant hardware problems exist in the V-F circuit, this diagnostic may not provide a consistently reliable indication. If difficulties remain, the need for a hardware service check is indicated.

When this firmware version is installed in other than Time Code configured machines, this diagnostic is inoperative. In these machines, a fourth diagnostic display count on power-up has no significance.

4.6 TIME CODE OUTPUT DURING TIME CODE RECORD

The Time Code output from the **APR-5003** was previously coincident with the advanced Time Code head. However, difficulties arose when using this output to record Time Code simultaneously on another device. This operation would result in an offset between the two devices, the offset being equal to the delay time between the Time Code and Audio Record heads.

Time Code can now be striped simultaneously on any other longitudinally corrected device without the need for a subsequent OFFSET adjustment to achieve synchronization. This holds true for Time Code from the internal generator, as well as any external Time Code which may be "daisy chained" through the machine.

4.7 CHASE POSITIONING OPTIMIZATION

During CHASE operation, parking the **APR-5003** to a stopped Master position is now user-adjustable by means of the "Acceleration Allowance". This Acceleration Allowance is the distance in advance of the stopped Master device at which the transport positions itself in CHASE mode. Its use allows the Slave device to be more closely tailored to a wide range of Master devices, covering a significant latitude of starting ballistics as well as starting/stopping reproduce performances.

The Acceleration Allowance can be entered into Storage Location 50, the maximum argument for this preset being one Frame less than 2 seconds, i.e 1:29 for SMPTE or 1:24 for EBU. If any presets exceeding these are entered, they will be truncated to the maximum allowable value. Once entered, the Acceleration Allowance is retained through power-down and will remain in effect until either changed by the user or disabled.

The Acceleration Allowance is disabled by storing a 0:00 in memory location 50. While disabled, the machine will use default values of 18 frames for the 7.5 and 15 ips speeds, or 19 frames for the 30 ips speed.

In a related enhancement, a received external LTC (Longitudinal Time Code) reference, which continuously repeats the same Time Code Frame Data, now causes the **APR-5003** to locate to the Acceleration Allowance (as described above) in advance of the time currently being received. With previous firmware, the machine considered this code to be in error and reverted to tracking the received sync words.

4.8 TIME CODE OUTPUT OPTIONS

Three mutually exclusive modes of supplying Time Code during High Speed Wind modes now are provided.

4.8.1 Direct Time Code from Tape

This mode is invoked by setting Storage Locations 35 and 36 to 0, and is primarily intended for use when the **APR-5003** is controlled by external synchronizers. Many of these devices read Time Code directly at moderate speeds, and, where conditions prohibit Time Code validation, they default to tape tach and direction outputs. This function was available with previous firmware.

4.8.2 Wind Speed Limit

Intended primarily for use when the **APR-5003** is used as a Master, this mode, which is invoked by setting Storage Location 36 to 1, was available in previous firmware revisions. It provides a means of limiting the maximum wind speed in such a manner that simple, Time Code-only, CHASE synchronizers are able to follow the **APR-5000**.

To the above-mentioned, a new capability now is added so that, at absolute velocities within ±50% of the nominal play speed (in either direction), the Time Code is longitudinally corrected to allow for head positioning.

4.8.3 Burst Time Code

Called up by setting Storage Location 35 to 1, and intended primarily for use when the **APR-5003** is used as a Master, this mode outputs Time Code in an unusual, but very constructive manner, providing an accurate, locally interpolated representation of the tape position.

The contemporary value of interpolated data is supplied at a sequentially incrementing, real time (nominal x1 frame) rate. The Time Code output is presented in this manner, regardless of the speed or direction of wind, and is updated with the contemporary value of the interpolated tape position data once in every 15 frames. Additionally, when the machine reaches a stopping position, a final, sequentially incrementing, real time "burst", 30 frames (SMPTE) or 25 frames (EBU) in duration, is supplied, this final one second of Time Code terminating with an extremely accurate representation of the stopping position.

The Burst Time Code feature maximizes CHASE performance with other **APR-5000** and PCM-3102/3202 machines. It also holds significant attraction to other synchronized systems, since it provides accurate position information over an unlimited wind speed range without the need for monitoring the Master's tape tach and direction signals. Further, since this form of Time Code, as well as being easy to decode, provides a buffered, accurate, locally interpolated representation of the tape position, it greatly simplifies the external device's task of determining both the tape position at high speeds and the stopping position.

Despite the ease with which this form of Time Code can be decoded, it may prove to be incompatible with some synchronizer systems. Should this be the case, the Time Code modes described in paragraphs 4.8.1 and 4.8.2 are available for use with such systems.

4.9 OFFSET CAPTURE

This new provision allows the "capture" of the current Frame offset between Master Time Code and internal tape Time Code. This can be displayed for identification and subsequent storage in a memory register, or can be loaded immediately into the FRAME OFFSET register.

Where it is desired simply to display the current offset, RCL (recall) 99 will cause the offset to be displayed. Where it is desired to load the offset directly into the FRAME OFFSET register, STO (store) 99 will cause the current offset to be loaded into that register (Storage Location 00).

4.10 BITBUMP

The resolution of synchronization offsets has been enhanced to provide adjustments down to 1/80th of a frame (0.42 ms resolution for SMPTE or 50 ms for EBU). This feature allows for dynamic adjustment, even while performing synchronous CHASE operations, the MVC wheel providing the means of manually adjusting this Bit resolution offset.

The BITBUMP adjustment facility is called up with RCL (recall) 98, which causes the LOCATE display to indicate:

(–)Ss.Ff –Bb –

In this display:

(–)	=	Minus Sign (where applicable)	
-	=	dash	
.	=	decimal point	
S	=	Tens seconds	
s	=	Units seconds	
F	=	Tens frames	
f	=	Units frames	
B	=	Tens Bits	(Module 80)
b	=	Units Bits	

When this display is present, the MVC wheel can be used to modify the synchronizing offset at the Bit level. Changes that overflow or underflow an 80 bit count in the BIT OFFSET will result in a corresponding increment or decrement of the FRAME OFFSET. However, changes to the FRAME OFFSET will not alter the BIT OFFSET selection.

Once set, the BIT OFFSET will be retained through power off. The BITBUMP adjustment facility is "put away" with STO (store) 98.

4.11 AUDIO DEFAULT PRESETS

If, for any reason, the audio alignment presets are lost and a "PE" STATUS message is displayed on the ALN (Alignment Panel), an average set of operating parameters can be loaded into the preset memory for immediate use. Although this feature existed in previous firmware, the current revision is updated to represent more contemporary values.

To implement the feature, the desired HI, MID or LOW speed is first set at the ALN, then CONTROL and the desired PRESET (1, 2 or 3) are pressed simultaneously.

A correct audio alignment should subsequently be loaded into Preset Memory at the earliest opportunity.

4.12 TC DISPAY FREEZE

On previous firmware revisions, this feature would indicate any error when reading a compromised Time Code. Time Code Freeze now occurs only when the Time Code error is prolonged in nature. Such errors now can be monitored in all modes by observing the TC Display M (Master, or external) and S (Slave) decimal points.

In a related change, the F decimal point now indicates a loss of valid radius. This indication may occur at power-up, or after a detecting a tape break.

5. UPDATED STORAGE LOCATIONS LIST

Because of additions and changes resulting from the new firmware, an updated Memory Locations list is given below.

LOCATION	DESCRIPTION	FUNCTION
00	Frame Offset (CHASE mode)	Store OFFSET
01-29	Locate Time	Store Locate Position
28	Repeat Start	Store Start Position
29	Repeat Stop	Store Stop Position
30	Auto TC Select	0 = Disable 1 = Enable
31	TC Type	0 = SMPTE 1 = EBU
32	Drop Frame	0 = NDF 1 = DF
33	Chase Mode	0 = Chase 1 = Normal
35	Burst Time Code	0 = Disable 1 = Enable
36	Wind Speed Limiter	0 = Normal 1 = Limit
40	Auto Shift Down	0 = Disable 1 = Enable
41	Semitone and IPS	0 = Disable 1 = Enable
50	Acceleration Allowance	Store Park Advance
98	BitBump	RCL = Enable Display STO = Disable Display
99	OFFSET Capture OFFSET Store	RCL = Display OFFSET STO = Store to OFFSET Loc. 00

NOTES:

1. Only Memory Locations 01-29, and 41 are applicable to non-Time Code machines.

2. Erroneous data may appear in Storage Location 50 after initial installation of the new firmware. To clear this data, a valid value (such as 0:00) should be entered into that Location.

SONY®

APR-5000 Series

Headstack Options

Operation and Maintenance Manual Supplement

Volume 1, 1st Edition

T-9482-525-1

CONFIDENTIAL

The material contained in this manual consists of information that is the property of Sony Corporation and is intended solely for use by the purchasers of the equipment described in this manual.
Sony Corporation expressly prohibits the duplication of any portion of this manual or the use thereof for any purpose other than the operation or maintenance of the equipment described in this manual without the express written permission of Sony Corporation.

CONFIDENTIEL

Le matériel contenu dans ce manuel consiste en informations qui sont la propriété de Sony Corporation et sont destinées exclusivement à l'usage des acquéreurs dé l'equipement décrit dans ce manuel.
Sony Corporation interdit formellement la copie de quelque partie que ce soit de ce manuel ou son emploi pour tout autre but que des opérations ou entretiens de l'équipement à moins d'une permission écrite de Sony Corporation.

VERTRAULICH

Das in dieser Anleitung enthaltene Material besteht aus Informationen, die Eigentum der Sony Corporation sind, und ausschließlich zum Gebrauch durch den Kaufer der in dieser Anleitung beschriebenen Ausrustung bestimmt sind.
Die Sony Corporation untersagt ausdrücklich die Vervielfaltigung jeglicher Teile dieser Anleitung order den Gebrauch derselben fur irgendeinen Zweck als die Bedienung order Wartung der in dieser Anleitung beschriebenen Ausrüstung ohne ausdrückliche schriftliche Erlaubnis der Sony Corporation.

WARNING

This equipment generates, uses, and can radiate radio frequency energy and, if not installed and used in accordance with the instuction manual, may cause interference to radio communications. It has been tested and found to comply with the limits for a Class A computing device pursuant to Subpart J of Part 15 of FCC Rules, which are designed to provide reasonable protection against such interference when operated in a commercial environment. Operation of this equipment in a residential area is likely to cause interference, in which case the user, at his own expense, will be required to take whatever measures may be required to correct the interference.

TABLE OF CONTENTS

SECTION 1 INTRODUCTION 1-1
1.1 OVERVIEW 1-1
1.1.1 Headstack Configuration 1-1
1.2 PERFORMANCE SPECIFICATIONS 1-1

SECTION 2 INSTALLATION 2-1
2.1 HEADSTACK 2-1

SECTION 3 ISOMETRIC DRAWINGS 3-1
3.1 OVERVIEW 3-1
3.2 PARTS INFORMATION 3-1
Mono 1/4" Headstack Assembly Parts List 3-2
NAB 1/4" Headstack Assembly Parts List 3-2
DIN 1/4" Headstack Assembly Parts List 3-2
1/2" Headstack Assembly Parts List 3-4

LIST OF FIGURES

Figure Number	Title	Page
Figure 3-1	MONO 1/4" Full-Track Headstack Isometric Drawing	3-3
	NAB 1/4" 2-Track Headstack Isometric Drawing	3-3
	DIN 1/4" 2-Track Headstack Isometric Drawing	3-3
Figure 3-2	1/2" 2-Track Headstack Isometric Drawing	3-5

LIST OF TABLES

Table Number	Title	Page
Table 1-1	MONO 1/4" Full-Track Headstack Performance Specifications	1-1
Table 1-2	NAB 1/4" 2-Track Headstack Performance Specifications	1-2
Table 1-3	DIN 1/4" 2-Track Headstack Performance Specifications	1-3
Table 1-4	1/2" 2-Track Headstack Performance Specifications	1-4
Table 2-1	1/4" MONO Headstack DIP Switch Settings	2-1
Table 2-2	1/4" NAB 2-Track Headstack DIP Switch Settings	2-1
Table 2-3	1/4" DIN 2-Track Headstack DIP Switch Settings	2-1
Table 2-4	1/2" 2-Track Headstack DIP Switch Settings	2-1

TABLE OF CONTENTS

SECTION 1	**INTRODUCTION**		1-1
	1.1	OVERVIEW	1-1
	1.1.1	Headstack Configuration	1-1
	1.2	PERFORMANCE SPECIFICATIONS	1-1
SECTION 2	**INSTALLATION**		2-1
	2.1	HEADSTACK	2-1
SECTION 3	**ISOMETRIC DRAWINGS**		3-1
	3.1	OVERVIEW	3-1
	3.2	PARTS INFORMATION	3-1
		Mono 1/4" Headstack Assembly Parts List	3-2
		NAB 1/4" Headstack Assembly Parts List	3-2
		DIN 1/4" Headstack Assembly Parts List	3-2
		1/2" Headstack Assembly Parts List	3-3

LIST OF FIGURES

Figure Number	Title	Page
Figure 3-1	MONO 1/4" Full-Track Headstack Isometric Drawing	3-5
	NAB 1/4" 2-Track Headstack Isometric Drawing	3-5
	DIN 1/4" 2-Track Headstack Isometric Drawing	3-5
Figure 3-2	1/2" 2-Track Headstack Isometric Drawing	3-7

LIST OF TABLES

Table Number	Title	Page
Table 1-1	MONO 1/4" Full-Track Headstack Performance Specifications	1-1
Table 1-2	NAB 1/4" 2-Track Headstack Performance Specifications	1-2
Table 1-3	DIN 1/4" 2-Track Headstack Performance Specifications	1-3
Table 1-4	1/2" 2-Track Headstack Performance Specifications	1-4
Table 2-1	1/4" MONO Headstack DIP Switch Settings	2-1
Table 2-2	1/4" NAB 2-Track Headstack DIP Switch Settings	2-1
Table 2-3	1/4" DIN 2-Track Headstack DIP Switch Settings	2-1
Table 2-4	1/2" 2-Track Headstack DIP Switch Settings	2-1

SECTION 1
INTRODUCTION

1.1 OVERVIEW

This Supplement pertains to the headstack configuration available for the APR-5000 Series Audio Tape Machine. Included are the performance specifications, installation procedures, maintenance requirements, isometric drawings and mechanical parts list for the following headstack configurations:

- APR-HB5001 MONO 1/4" Full Track Headstack
- APR-HB5002 NAB 1/4" 2 Track Headstack
- APR-HB5002D DIN 1/4" 2 Track Headstack
- APR-HB5002H ANALOG 1/2" 2 Track Headstack

1.1.1 HEADSTACK CONFIGURATION

The arrangement of the heads on the assembly is identical to that outlined in the APR-5000 OPERATION AND MAINTENANCE MANUAL.

1.2 PERFORMANCE SPECIFICATIONS

APR-HB5001 MONO 1/4" FULL TRACK HEADSTACK

FREQUENCY RESPONSE:

RECORD/REPRODUCE: (Using Scotch 226 Tape) (Referenced to 250 nWb/m)

SPEED	EQ	RANGE	LEVEL
30 ips	AES	50Hz to 28kHz	+0.75/−3dB
15 ips	NAB	30Hz to 24kHz	+0.75/−2dB
7.5 ips	NAB	20Hz to 20kHz	+0.75/−2dB

RECORD/SYNC: (Using Scotch 226 Tape)

SPEED	EQ	RANGE	LEVEL
30 ips	AES	50Hz to 20kHz	+0.75/−3dB
15 ips	NAB	30Hz to 16kHz	+0.75/−2dB
7.5 ips	NAB	20Hz to 8kHz	+0.75/−2dB

SIGNAL TO NOISE:

RECORD/REPRODUCE (Referenced to 250 nWb/M)

SPEED	EQ	UNWTD*	dB(A)
30 ips	AES	−64dB	−68dB
15 ips	NAB	−62dB	−64dB
7.5 ips	NAB	−61dB	−64dB

*Unweighted: 20 Hz to 20 kHz (Third Order Filtering)

GAP COMPENSATION

SPEED	RGC	SGC	RCF	RCB
30 ips	C1	C1	C0	C1
15 ips	CA	CC	C9	C5
7.5 ips	CB	CE	C4	C3

DEPTH OF ERASE (Referenced to 250 nWb/m) Better Than −76dB at 1kHz, at 30 ips

ERASE/BIAS TO AUDIO CROSSTALK Less Than 150 mVpp at 7.5 ips

NOTE: The Master Erase Level may be higher due to a larger Track width.

Table 1-1. MONO 1/4" Full Track Headstack Performance Specifications

APR-HB5002 NAB 1/4'' 2-TRACK HEADSTACK

FREQUENCY RESPONSE:

RECORD/REPRODUCE: (Using Scotch 226 Tape) (Referenced to 250 nWb/m) (Standard NAB Track Format)

SPEED	EQ	RANGE	LEVEL
30 ips	AES	50Hz to 28kHz	+0.75/−3dB
15 ips	NAB	30Hz to 24kHz	+0.75/−2dB
7.5 ips	NAB	30Hz to 20kHz	+0.75/−1.5dB

RECORD/SYNC: (Using Scotch 226 Tape)

SPEED	EQ	RANGE	LEVEL
30 ips	AES	50Hz to 20kHz	+0.75/−3dB
15 ips	NAB	30Hz to 16kHz	+0.75/−2dB
7.5 ips	NAB	30Hz to 8kHz	+0.75/−2dB

SIGNAL TO NOISE:

RECORD/REPRODUCE (Referenced to 250 nWb/m)

SPEED	EQ	UNWTD*	dB(A)
30 ips	AES	−59dB	−64dB
15 ips	NAB	−56dB	−61dB
7.5 ips	NAB	−56dB	−61dB

*Unweighted: 20 Hz to 20 kHz (Third Order Filtering)

GAP COMPENSATION

SPEED	RGC	SGC	RCF	RCB
30 ips	C1	C1	C0	C1
15 ips	CA	CC	CB	C7
7.5 ips	CA	CE	C4	C4

DEPTH OF ERASE (Referenced to 250 nWb/m) Better Than −76dB at 1kHz, at 30 ips

ERASE/BIAS TO AUDIO CROSSTALK Less Than 150 mVpp at 7.5 ips

NOTE: The Master Erase Level may be higher due to a larger Track width.

Table 1-2. NAB 1/4'' 2-Track Headstack Performance Specifications

APR-HB5002D DIN 1/4'' 2-TRACK HEADSTACK

FREQUENCY RESPONSE:

RECORD/REPRODUCE: (Using Scotch 226 Tape) (Referenced to 250 nWb/m)

SPEED	EQ	RANGE	LEVEL
30 ips	AES	50Hz to 28kHz	+0.75/−3dB
15 ips	IEC	30Hz to 24kHz	+0.75/−2dB
7.5 ips*	IEC	20Hz to 20kHz	+0.75/−2dB

* 7.5 ips Specifications at Reference −10 dB (79 nWb/m)

RECORD/SYNC: (Using Scotch 226 Tape)

SPEED	EQ	RANGE	LEVEL
30 ips	AES	50Hz to 20kHz	+0.75/−3dB
15 ips	IEC	30Hz to 16kHz	+0.75/−2dB
7.5 ips	IEC	20Hz to 8kHz	+0.75/−2dB

SIGNAL TO NOISE:

RECORD/REPRODUCE (Referenced to 250 nWb/m)

SPEED	EQ	UNWTD**	dB(A)
30 ips	AES	−59dB	−64dB
15 ips	IEC	−56dB	−61dB
7.5 ips	IEC	−56dB	−61dB

**Unweighted: 20 Hz to 20 kHz (Third Order Filtering)

GAP COMPENSATION

SPEED	RGC	SGC	RCF	RCB
30 ips	C1	C1	C0	C1
15 ips	CA	CA	C3	C2
7.5 ips	C4	C6	C4	C4

DEPTH OF ERASE (Referenced to 250 nWb/m) Better Than −74dB at 1kHz, at 30 ips

ERASE/BIAS TO AUDIO CROSSTALK Less Than 150 mVpp at 7.5 ips

NOTE: Be sure that all speeds are set to the IBC Equalization on the ALN.

Table 1-3. DIN 1/4'' 2-Track Headstack Performance Specifications

APR-HB5002H 1/2'' 2-TRACK HEADSTACK

FREQUENCY RESPONSE:

RECORD/REPRODUCE: (Using Scotch 226 Tape) (Referenced to 250 nWb/m)

SPEED	EQ	RANGE	LEVEL
30 ips	AES	40Hz to 25kHz	+0.75/−3dB
15 ips	NAB	25Hz to 24kHz	+0.75/−2dB
7.5 ips	NAB	25Hz to 22kHz	+0.75/−2dB

RECORD/SYNC: (Using Scotch 226 Tape)

SPEED	EQ	RANGE	LEVEL
30 ips	AES	40Hz to 25kHz	+0.75/−3dB
15 ips	NAB	20Hz to 20kHz	+0.75/−2dB
7.5 ips	NAB	20Hz to 10kHz	+0.75/−2dB

SIGNAL TO NOISE:

RECORD/REPRODUCE (Referenced to 250 nWb/m)

SPEED	EQ	UNWTD	dB(A)
30 ips	AES	−62dB	−66dB
15 ips	NAB	−59dB	−64dB
7.5 ips	NAB	−59dB	−64dB

GAP COMPENSATION

SPEED	RGC	SGC	RCF	RCB
30 ips	C0	C0	C1	C0
15 ips	C9	CA	C1	C5
7.5 ips	CB	CE	C4	C3

DEPTH OF ERASE (Referenced to 250 nWb/m) Better Than −72dB at 1kHz, at 15 ips

ERASE/BIAS TO AUDIO CROSSTALK Less Than 100 mVpp at all speeds

MASTER ERASE LEVEL

The MASTER ERASE LEVEL should be set to 15vpp or enough to achieve the specification of DEPTH OF ERASE. This setting is compatible with 1/4'' Head Formats.

MASTER BIAS LEVEL

The MASTER BIAS LEVEL should be set to 10.2Vpp for obtaining the over bias specification on all speeds as described in the APR-5000 OPERATION AND MAINTENANCE MANUAL, Section 6.7.1. This setting is compatible with 1/4'' Head Format.

START-UP TIME

The START-UP TIME is longer than the 1/4'' series, due to higher reel mass on the 1/2'' APR-5000 Series. 1/4'' specification on START-UP TIME to FLUTTER does not apply for 1/2'' Tape Formats.

Table 1-4. 1/2'' 2-Track Headstack Performance Specifications

SECTION 2
INSTALLATION

2.1 HEADSTACK

The headstack assembly is easily removed by using the following procedure. Prior to installing the headstack, check the DIP switch settings to confirm that they are accordance with those listed below for the appropriate configuration.

When a headstack is used for the first time, make the head adjustments as are described in the APR-5000 OPERATION AND MAINTENANCE MANUAL, Sections 6.5 and 6.6.

CAUTION

Ensure that the power switch is in the "OFF" position before installing or removing a headstack assembly. Check the connectors on the headstack and deck plate to confirm that they are properly mated. This is extremely important in order to prevent damage to either the connectors and/or the tape machine.

STEP 1 Remove the headstack cover plate if it is installed.

STEP 2 Loosen the three screws from each corner (refer to Figure 6-12 in the OPERATION AND MAINTENANCE MANUAL). These screws are the captive type, eliminating the possibility of being lost.

STEP 3 Remove the headstack from the transport deck by pulling straight up.

STEP 4 To install the new headstack, set the appropriate DIP switch settings to the correct positions as shown in Tables 2-1 thru 2-4. Place the headstack on the connector and mounting studs. Apply downward pressure until it is seated firmly in place.

STEP 5 Secure the screws and headstack cover plate.

STEP 6 Set the power switch to "ON" and check the tape machine for proper operation.

STEP 7 Place the unused headstack assembly in the original packing carton, as this will prevent the possibility of damaging the assembly while being stored.

	DIP Switch Setting							
DIP Switch	1	2	3	4	5	6	7	8
Code	1	1	0	0	1	0	0	1

Table 2-1. 1/4" MONO Full Track Headstack DIP Switch Settings

	DIP Switch Setting							
DIP Switch	1	2	3	4	5	6	7	8
Code	1	1	0	0	1	0	1	0

Table 2-2. 1/4" NAB 2-Track Headstack DIP Switch Settings

	DIP Switch Setting							
DIP Switch	1	2	3	4	5	6	7	8
Code	1	1	0	1	1	0	1	0

Table 2-3. 1/4" DIN 2-Track Headstack DIP Switch Settings

	DIP Switch Setting							
DIP Switch	1	2	3	4	5	6	7	8
Code	1	1	1	0	1	0	1	0

Table 2-4. 1/2" 2-Track Headstack DIP Switch Settings

Perform the routine maintenance as outlined in the APR-5000 OPERATION AND MAINTENANCE MANUAL, beginning at Section 6.3.

SECTION 3
ISOMETRIC DRAWINGS

3.1 OVERVIEW

This section contains the exploded view and parts list for each of the headstack configurations.

3.2 PARTS INFORMATION

1. Safety Related Component Warning

   Components marked with ⚠ on the exploded views and spare parts list are critical to safe operation. Replace these components with Sony parts whose part numbers appear as shown in this manual or in service bulletins and service manual supplements published by Sony.

2. Replacement parts supplied from Sony Parts Center will sometimes have different shape and outside view from the parts which are actually in use. This is due to "accommodating improved parts and/or engineering changes" or "standardization of genuine parts."

   - The spare parts list indicate the part numbers of "standardized genuine parts".
   - Refer to Sony service bulletins and service manual supplements regarding engineering parts changes in our engineering department.

3. Items with no part number and/or no description are not stocked because they are seldom required for routine service.

1/4'' Headstack Assembly Parts List
MONO — NAB — DIN

ISOMETRIC DRAWINGS

Ref. No.	SONY Part No.	Description	Serv. Code
201	3-673-968-01	Stopper, Screw (x3)	O
202	7-623-207-22	Washer, Spring 2.6 (x2)	S
203	7-628-253-35	Screw, +PS M2 x 8 (x2)	S
204	7-682-947-01	Screw, +PSW 3 x 6 (x6)	S
205	7-682-569-09	Screw, +B 4 x 35 (x3)	S
206	1-516-925-31	DIP Switch, 8 Position	S
207	3-711-112-02	Headstack Side Cover	O
208	3-711-191-01	Standoff Connector (x2)	O
209	3-701-512-01	Set Screw M4 x 8 (x3)	S
210	7-624-105-04	Stop Ring, E2.3 (x3)	S
212	3-711-280-01	Spring, Compression (x6)	S
213	3-711-113-02	Plate, Head Cam (x3)	O
214	T-9451-972-1	Screw, Allen 3 x 12 (x3)	S
215	3-711-131-11	Screw, Allen 2.6 x 13 (x6)	O
216	3-711-183-01	Disc, Pressure (x3)	O
217	3-711-227-01	Plate, Head Mounting (2) (x2)	O
218	3-711-246-01	Cam, Wrap Adjust (x3)	O
219	1-535-432-11	Terminal, Solderless (x2)	O
221	3-711-114-01	Plate, Head Mounting (1)	O
223	T-9453-424-1	Screw,3-48 x 3/16 (x2)	O
224	7-621-773-95	Screw, +B M2.6 x 6 (x2)	S
225	T-9481-639-1	Assy 1/4" Scrape Filter	S
226	1-937-559-12	Harness Headstack	O
227	4-882-696-01	Spacer	S
228	7-688-002-12	Washer, 2.6 Middle (x2)	S
229	X-3711-014-1	Baseplate 1/4 Assembly	O
230	2-264-136-01	Standoff (x2)	O
230	3-711-189-01	Bushing, 1/4"	O
231	T-9412-248-1	CN, Plug 204533-1	O
232	T-9412-251-1	CN, Female	O
233	3-711-133-01	Fast Guide H/B (1/4")	O
234	T-9481-799-1	AHB Assy	O
235	1-619-380-11	ID Switch PC Board	O

MONO 1/4'' Headstack Assembly Parts List

All parts are identical to the above list with the following additions:

Ref. No.	SONY Part No.	Description	Serv. Code
211	1-543-454-11	Play Head, MONO Full Track, with pin	S
220	1-543-456-11	Erase Head, MONO Full Track, with pin	S
222	1-543-455-11	Record Head, MONO Full Track, with pin	S

NAB 1/4'' Headstack Assembly Parts List

All parts are identical to the above list with the following additions:

Ref. No.	SONY Part No.	Description	Serv. Code
211	1-543-447-11	Play Head, NAB, with pin	S
220	1-543-451-11	Erase Head, NAB/DIN, with pin	S
222	1-543-448-11	Record Head NAB, with pin	S

DIN 1/4'' Headstack Assembly Parts List

All parts are identical to the above list with the following additions:

Ref. No.	SONY Part No.	Description	Serv. Code
211	1-543-452-11	Play Head, DIN, with pin	S
220	1-543-451-11	Erase Head, NAB/DIN, with pin	S
222	1-543-453-11	Record Head DIN, with pin	S

NOTES:

1. SERVICE CODE:
   S: Stock Parts: Normally stocked for replacement purpose.
   O: Order Parts: Orders will be processed, but allow for additional delivery time.
2. Items with no part number and/or no description are not stocked because they are seldom required for routine service or are part of another assembly. Some common hardware items have no part number.

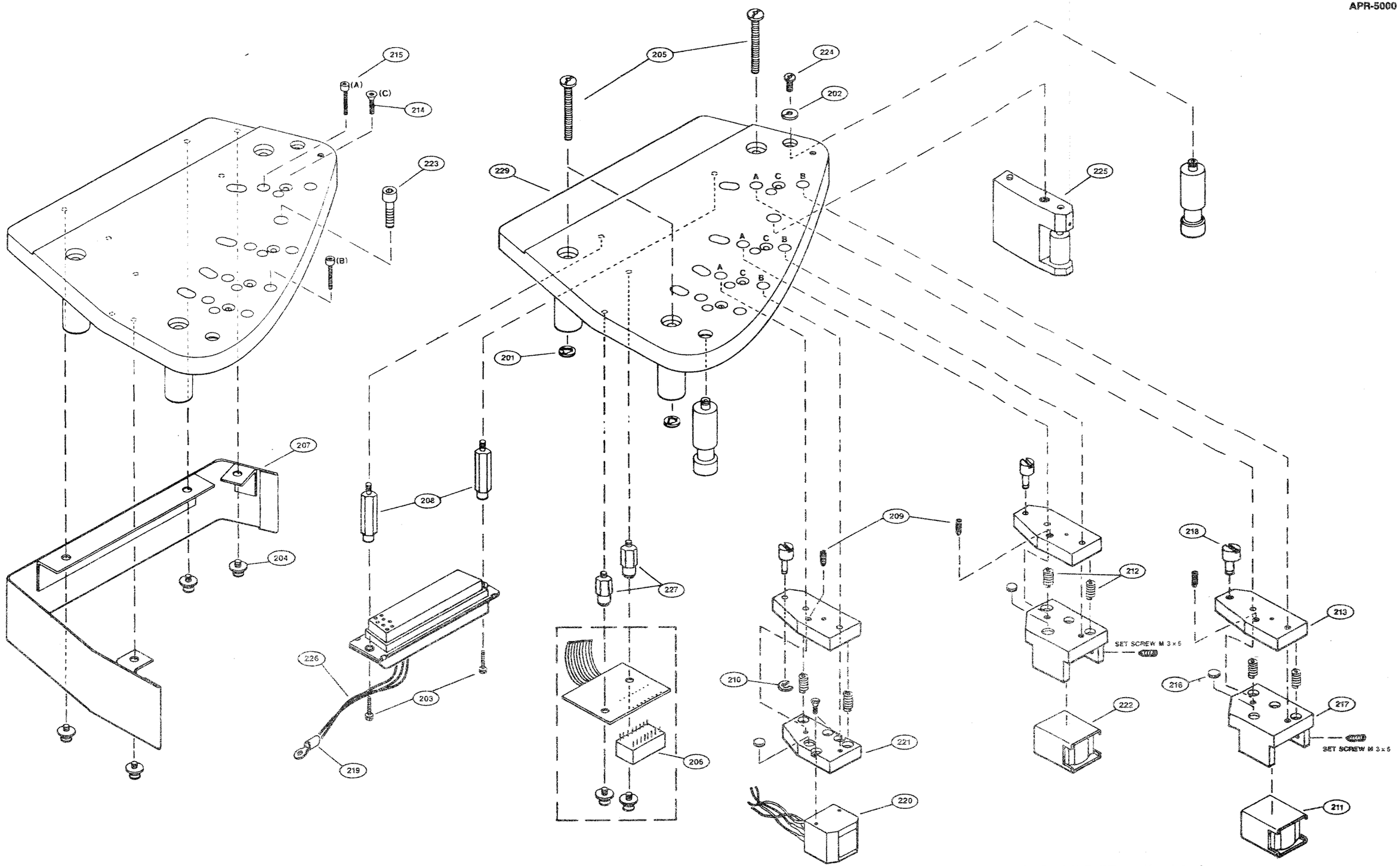

Figure 3-1. MONO 1/4'' Full-Track Headstack
NAB 1/4'' 2-Track Headstack
DIN 1/4'' 2-Track Headstack

1/2'' Headstack Assembly Parts List

ISOMETRIC DRAWINGS

Ref. No.	SONY Part No.	Description	Serv. Code
201	3-673-968-01	Stopper, Screw (x3)	O
203	7-628-253-35	Screw, +PS2 x 8 (x2)	S
204	7-682-947-01	Screw, +PSW3 x 6 (x6)	S
205	7-682-570-09	Screw, +B M4 x 40 (x3)	S
206	1-516-925-31	DIP Sw, 8 Position	S
207	3-711-334-01	Headstack Side Cover	O
208	3-711-191-01	Standoff (x2)	O
209	3-701-512-01	Set Screw M4 x 8 (x3)	S
210	7-624-105-04	Stop Ring, E2.3 (x3)	S
211	1-543-457-11	Play Head, 2 Track, with pin	S
212	3-711-280-01	Spring, Compression (x6)	O
213	3-711-113-02	Plate Head CAM (x3)	O
214	T-9451-972-1	Screw, Allen 3 x 12 (x3)	S
215	3-711-131-11	Screw, Allen 2.6 x 13 (x6)	O
216	3-711-183-01	Disc, Pressure (x3)	O
217	3-711-227-01	Plate, Head Mounting (2) (x2)	O
218	3-711-246-01	Cam, Wrap Adjust (x3)	O
219	1-535-432-11	Terminal, Solderless (x2)	O
220	1-543-459-11	Erase Head, 2 Track, with pin	S
221	3-711-114-01	Plate, Head Mounting (1)	O
222	1-543-458-11	Record Head, 2 Track, with pin	S
223	T-9453-424-1	Screw, 3-48 x 3/16 Fl Head(x2)	S
224	T-9453-536-1	Screw, #8 5/8 Allen Cap	O
225	T-9481-639-1	Assy 1/4'' Scrape Filter	S
226	1-937-559-12	Harness (Headstack)	O
227	3-711-331-01	Spacer	S
229	X-3711-029-1	Baseplate 1/2 Assembly	O
230	3-711-189-01	Bushing, 1/4''	O
231	3-711-329-01	1/2'' Flange (a) (x2)	O
232	3-711-330-01	1/2'' Flange (b)	O
233	X-3711-027-1	Assy 1/2'' Spacer Block	O
234	T-9412-248-1	CN, Plug 204533-1	O
235	T-9412-251-1	CN, Female	O
236	3-711-133-01	Fast Guide H/B (1/4'')	O
237	T-9481-799-1	AHB Assy	O
238	1-619-380-11	ID Switch PC Board	O

NOTES:

1. SERVICE CODE:
   S: Stock Parts: Normally stocked for replacement purpose.
   O: Order Parts: Orders will be processed, but allow for additional delivery time.
2. Items with no part number and/or no description are not stocked because they are seldom required for routine service or are part of another assembly. Some common hardware items have no part number.

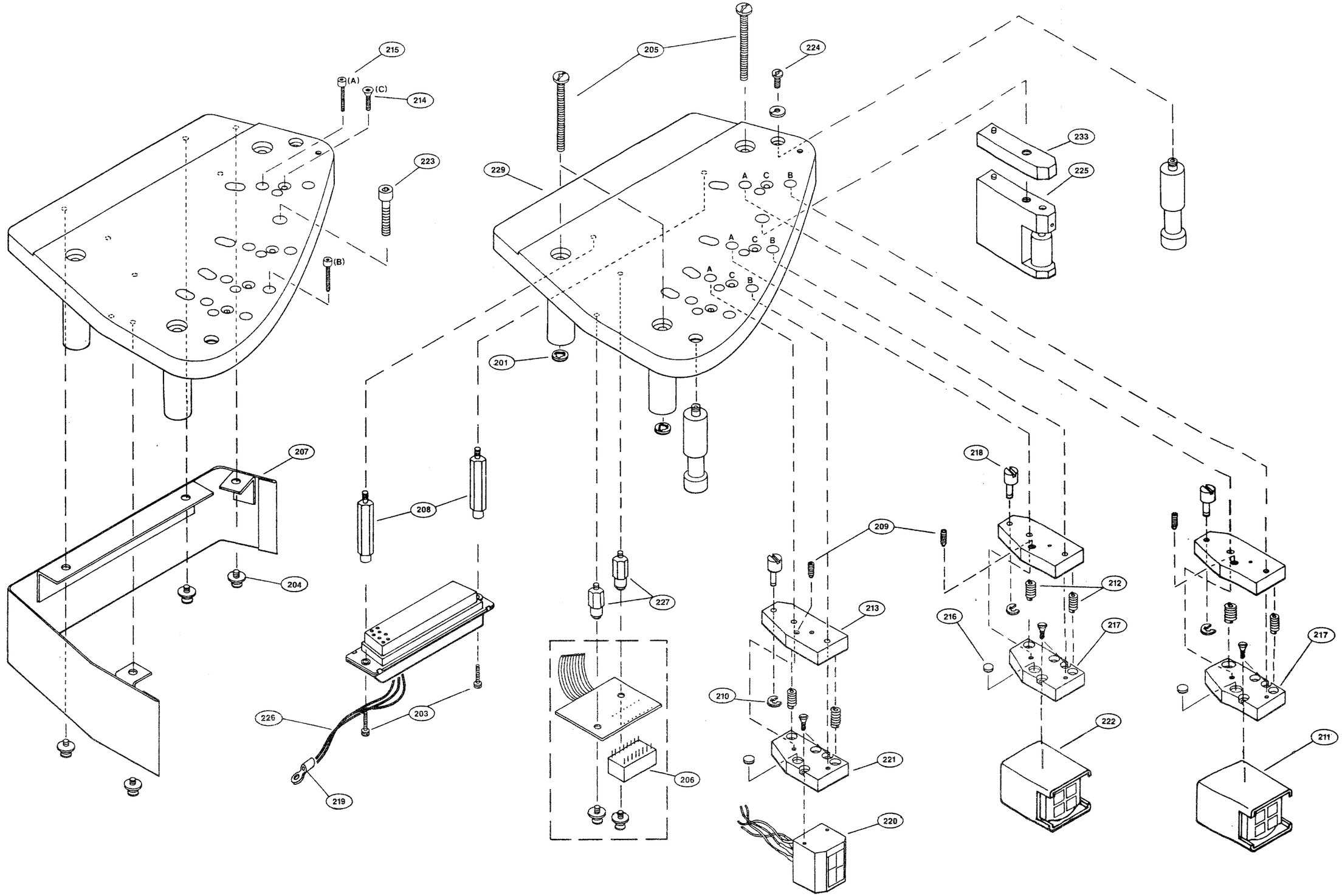

Figure 3-2. 1/2'' 2-Track Headstack

ANALOG TAPE RECORDER

APR-5003V

SUPPLEMENT

This supplement is applicable to APR-5000 Series Operation and Maintenance Manual.

T-9482-914-1

ADDENDUM TO APR-5000 SERIES OPERATION AND MAINTENANCE MANUAL

ANALOG TAPE RECORDER APR-5003V

SECTION 1
INTRODUCTION

1.1 OVERVIEW

The **APR-5003V** Recorder/Reproducer is an extended version of the standard **APR-5003**, and includes new features which are designed for use in Video Post Production, Film Audio Production and Radio Station/Radio Network operations, as well as Recording Studio work.

The fundamental operational and performance characteristics of the **APR-5003V** remain the same as those for all other **APR-5000** series machines, and are fully described in the **APR-5000** Series Operation and Maintenance manual. This Supplement provides information relevant to the **APR-5003V**.

1.2 Features

Features incorporated in the **APR-5003V** include:

- RESOLVE ON PLAY — Establishes and maintains synchronous operation between Time Code from tape and an external reference, regardless of any offset.
- PREVIEW, EDIT and REVIEW — These features provide a series of editing capabilities. These can be manually triggered or automatically triggered from external Time Code.
- FIND — Provides for speedy access to any Time Code location within a number of discontiguous Takes.
- Enhanced CHASE mode operation which allows for synchronization to either Longitudinal Time Code or Vertical Interval Time Code.
- Enhanced Time Code recording capability which permits internal recording from an external reference.

The operational differences with these new or enhanced features are described in the following pages, together with such procedures as may be necessary. It should be noted that all of these procedures presuppose that the user is familiar with basic **APR-5000** operations.

1.3 Options

The options available for the **APR-5003V** remain the same as those for all previous **APR-5000** Series Analog Tape Recorders, these being:

Stand **SU-14** — A variable profile stand which converts the machine from desk top version to stand alone version.

Remote Control **RM-5010** — This remote control unit allows the user to control the machine transport functions and enable channels for recording from a remote location.

Scissor Option **APR-5010** — In editing operations, this option becomes very useful inasmuch as it expedites production. This option must be installed at the factory, and is available only on those machines with 1/4-inch headstacks.

1.4 SPECIFICATIONS

All specifications for the **APR-5003V** remain the same as for the current **APR-5003** except for the following items which reflect the new video related features:

Video Input/Output Connectors:

Two BNC connectors with switchable 75Ω termination

Input Level:

Composite Sync or Video Setting — Input impedance 10k (jumper installed at JU1 on VVT board)

Video — Standard RS-170A level (nominal)
OR
Sine wave input — 0.4 Vpp min, 6.0 Vpp max
OR
Square wave input — 0.2 Vpp min, 6.0 Vpp max

Logic Setting — 100k input impedance (jumper installed at JU2 on VVT board)

Accomodates either TTL or CMOS logic families directly
OR
Sine wave input — 3.0 Vpp min. 20 Vpp max
OR
Square wave input — 1.5 Vpp min, 20 Vpp max

SECTION 2
PACKING AND UNPACKING

Packing and unpacking instructions for the **APR-5003V** remain unchanged from those given in Section 2 of the **APR-5000** Series Operation and Maintenance Manual.

SECTION 3
INSTALLATION

Installation instructions for the **APR-5003V** remain unchanged from those given in Section 3 of the **APR-5000** Series Operation and Maintenance Manual.

SECTION 4
CONTROLS, INDICATORS AND OPERATION

4.1 OVERVIEW

In this section of the manual, the functions of all control keys and indicators on the Tape Transport, the Alignment Control Panel, and the Meter Housing are described, together with the basic operating sequences.

4.2 TRANSPORT CONTROL PANEL

The functions of all the keys and indicators on the tape transport control panel are described in the following paragraphs. Refer to Figure 4-1 for all key and indicator locations.

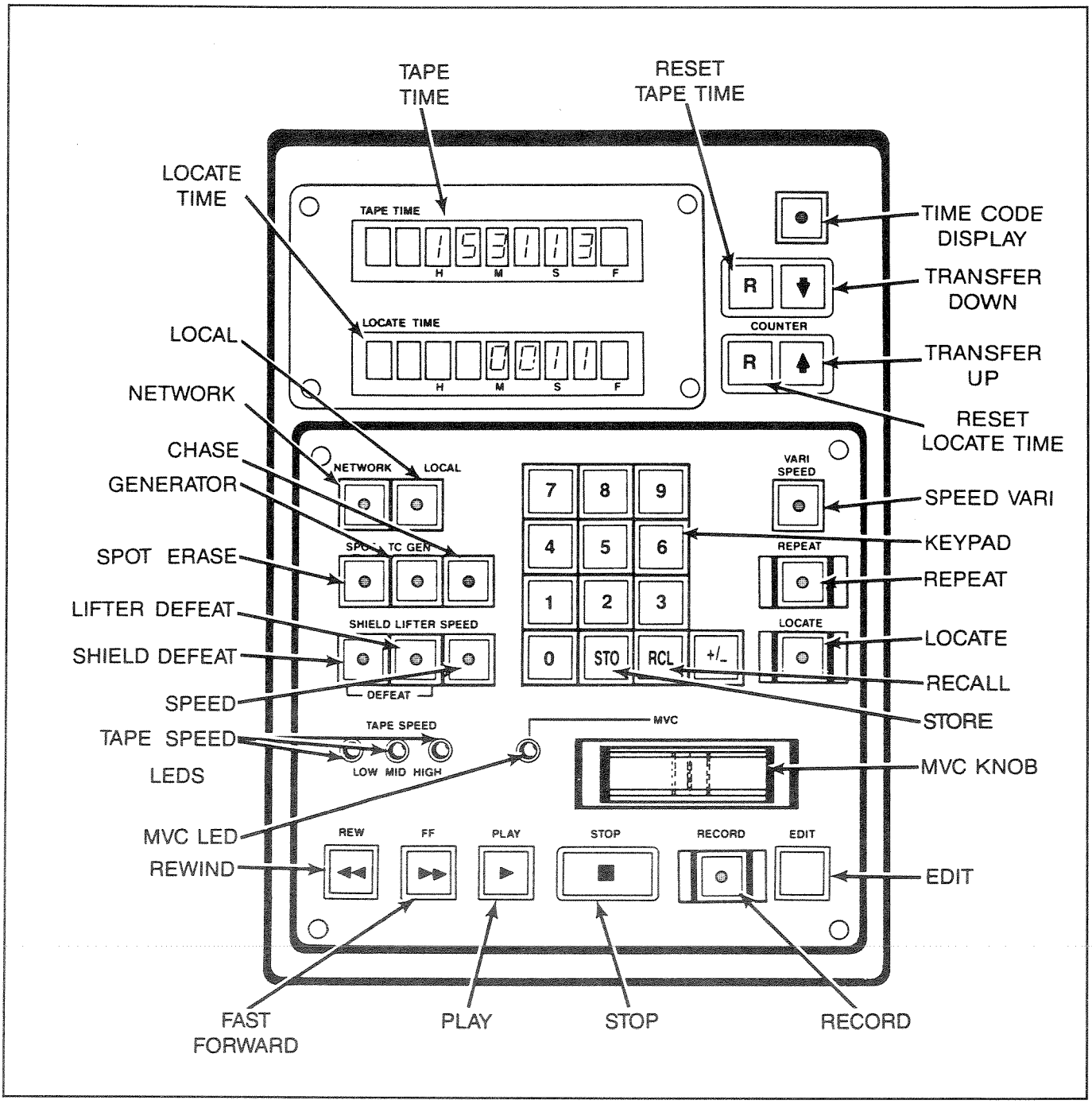

Figure 4-1. Transport Control Panel

4.2.1 Key and Display Functions

REW

Pressing REW (REWIND) causes the transport to go into fast rewind mode. This operation cancels any previous motion command such as FAST FORWARD, PLAY or RECORD. Except when used in conjunction with SHIELD DEFEAT, REW also causes the audio channels to be muted.

Touching the MVC control during FAST REWIND causes the transport to enter SPOOL mode. In this mode, the wind speed is reduced to about 75 ips (inches per second) so as to allow more uniform packing of the tape.

FF

Pressing FF (FAST FORWARD) causes the transport to enter the FAST FORWARD mode, this overriding any previously selected motion command such as REWIND, PLAY or RECORD. Except when used in conjunction with SHIELD DEFEAT, FF also causes the audio channels to be muted.

As with REWIND mode, touching the MVC control during FAST REWIND causes the transport to enter SPOOL mode.

STOP

Pressing STOP cancels any previously selected motion command and stops the tape. This causes the STOP key to illuminate (so long as there is tape across the End of Tape sensor). The audio channels will be muted unless either LIFTER DEFEAT or SHIELD DEFEAT is selected.

PLAY

Pressing PLAY initiates the PLAY mode, causing the tape to shuttle across the heads at the selected play speed. PLAY also is used to trigger RESOLVE ON PLAY operation (paragraph 4.5.1), to manually trigger PREVIEW/EDIT/REVIEW operations, or to exit the RECORD operation.

Unless SHIELD DEFEAT is selected, the audio channels are muted during the period between start-up and the time that play speed is achieved.

RECORD

Pressing RECORD together with PLAY sets those channels that are in RECORD READY (see paragraph 4.4.1 — **RECORD** section) into RECORD Mode, which can be entered from the STOP, FAST FORWARD or REWIND modes. To enter RECORD from the PLAY mode, it is necessary only to press RECORD . If no channels are in RECORD READY (all channels in SAFE) the transport will not enter RECORD mode.

Once the transport is in RECORD mode, the recording status of any channel can be changed by first pressing the channel's **RECORD** READY key (see paragraph 4.4.1 — **RECORD** section), and then pressing RECORD . For instance, let it be assumed that the transport has been set into RECORD with only Channel 1 actually recording. Channel 2 can be set into RECORD at any time by simply pressing the CH 2 READY key, and then pressing RECORD . Conversely, given the same situation, Channel 1 can be taken out of RECORD by pressing CH 1 READY and then pressing RECORD .

SPEED

This key is used to set the desired PLAY speed. Each time the key is pressed the speed advances to the next higher speed, which then is shown on the **HIGH**, **MID**, or **LOW TAPE SPEED** indicator. The range of these speeds is set by the headstack identification code. At machine power-up, the most recently used speed will be automatically selected.

LIFTER

Pressing LIFTER (LIFTER DEFEAT) causes the lifters to be defeated, allowing them to remain disengaged when in any FAST WIND mode, i.e. FAST FORWARD, REWIND, LOCATE or SPOOL.

SHIELD

The SHIELD (SHIELD DEFEAT) key is used to deactivate the shields. When this key is pressed, it illuminates to indicate that the shield will stay down during PLAY or RECORD, and that the audio channels will stay unmuted.

EDIT

The EDIT mode is used to facilitate the splicing and edit-assembly operations, and offers two different methods, as follows:

EDIT — In EDIT, all tape tensions are relaxed, making it possible to use the splicing block.

DUMP EDIT — In this mode, the tape is played across the heads, but the take-up reel is turned off so that the tape runs off the machine into a suitable waste container.

EDIT is entered from the STOP position by pressing EDIT, this key becoming illuminated to show that EDIT mode has been entered and that all tape tensions are relaxed. EDIT mode can be cancelled either by pressing EDIT again, or by pressing STOP.

DUMP EDIT is entered from the EDIT mode by pressing PLAY. Before entering this mode, the tape should first be cut, and have its leading edge dressed off the machine to the right. From DUMP EDIT, pressing STOP causes the transport to revert to EDIT mode, which then can be cancelled by pressing either EDIT or STOP.

LOCATE

Selecting LOCATE causes the transport to fast wind from the current location shown in the **TAPE TIME** display to the location shown in the **LOCATE TIME** display, the direction of wind being determined by the relative values in the two displays. If so desired, the SPOOL Mode can be entered by momentarily touching MVC after entering LOCATE Mode.

REPEAT

In the REPEAT mode, the tape transport repeatedly plays the same tape segment. The mode can be cancelled by pressing STOP.

To program the REPEAT function, the START time is entered into Storage Location 28 and the END time is entered into Storage Location 29. In order for the REPEAT function to operate, the specified END time must be later than the START time. Negative numbers are permissible so long as a positive number results when the value in Storage Location 28 is subtracted algebraically from that in Location 29.

MVC

The MVC (MANUAL VELOCITY CONTROL) knob provides a number of functions, depending upon the current mode of operation.

In the STOP mode, MVC can be used to shuttle the tape backward or forward at a selectable winding speed, the direction and speed depending upon the way the control is operated. With the control pushed to the right, the tape winds in the forward direction. Conversely, with the control pushed to the left, the tape rewinds. In either case, the wind speed depends upon the distance from center that the control is moved. With the control pushed fully left or fully right, the tape shuttles at a speed somewhat greater than that of the SPOOL mode. MVC operation in the STOP mode is summarized in Figure 4-2.

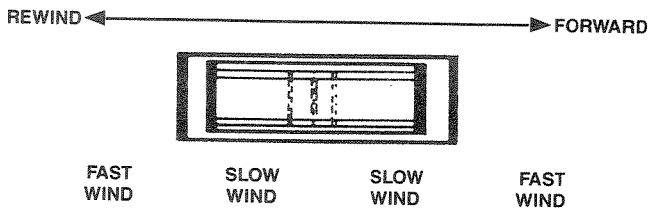

Figure 4-2. MVC Operation

In the LOCATE, FAST FORWARD and REWIND modes, simply touching the MVC control causes transport to enter SPOOL mode, with the wind speed reduced to 75 ips.

In PLAY mode, the MVC control is disabled, except when VARI SPEED EXECUTE mode also is selected. In the VARI SPEED EXECUTE mode, the MVC control can be moved to the right to increase the play speed or to the left to reduce the play speed.

VARI SPEED

The VARI SPEED key is used to enable the VARIABLE SPEED mode which allows the selected play speed to be either increased or reduced by up to 50% of its nominal rate. Desired VARIABLE SPEED values are entered in terms of percentage, positive values leading to an increase in speed, and negative values leading to a reduction in speed. Where any value greater than 50% is entered, it becomes automatically truncated to 50%.

VARIABLE SPEED entries can be made via either one of two modes, as illustrated in Figure 4-3 and described below:

To enter the DIRECT SPEED ENTRY mode, VARI SPEED is pressed once. At this time, the key indicator flashes on and off, and any VARI SPEED value that may have been previously entered is shown on the **LOCATE TIME** display. In this mode, the desired percentage is entered via the numeric keypad.

Once the VARISPEED value has been entered in this manner, the transport can be made to play at the modified speed by simply pressing VARI SPEED again. (It should be noted that this automatically sets the transport into the MANUAL SPEED ENTRY mode described below.)

The MANUAL SPEED ENTRY mode can be entered by pressing VARI SPEED twice. In this mode, any existing VARI SPEED value also is shown in the **LOCATE TIME** display, but the key indicator is solidly illuminated. The desired VARI SPEED percentage now can be entered by means of the MVC control.

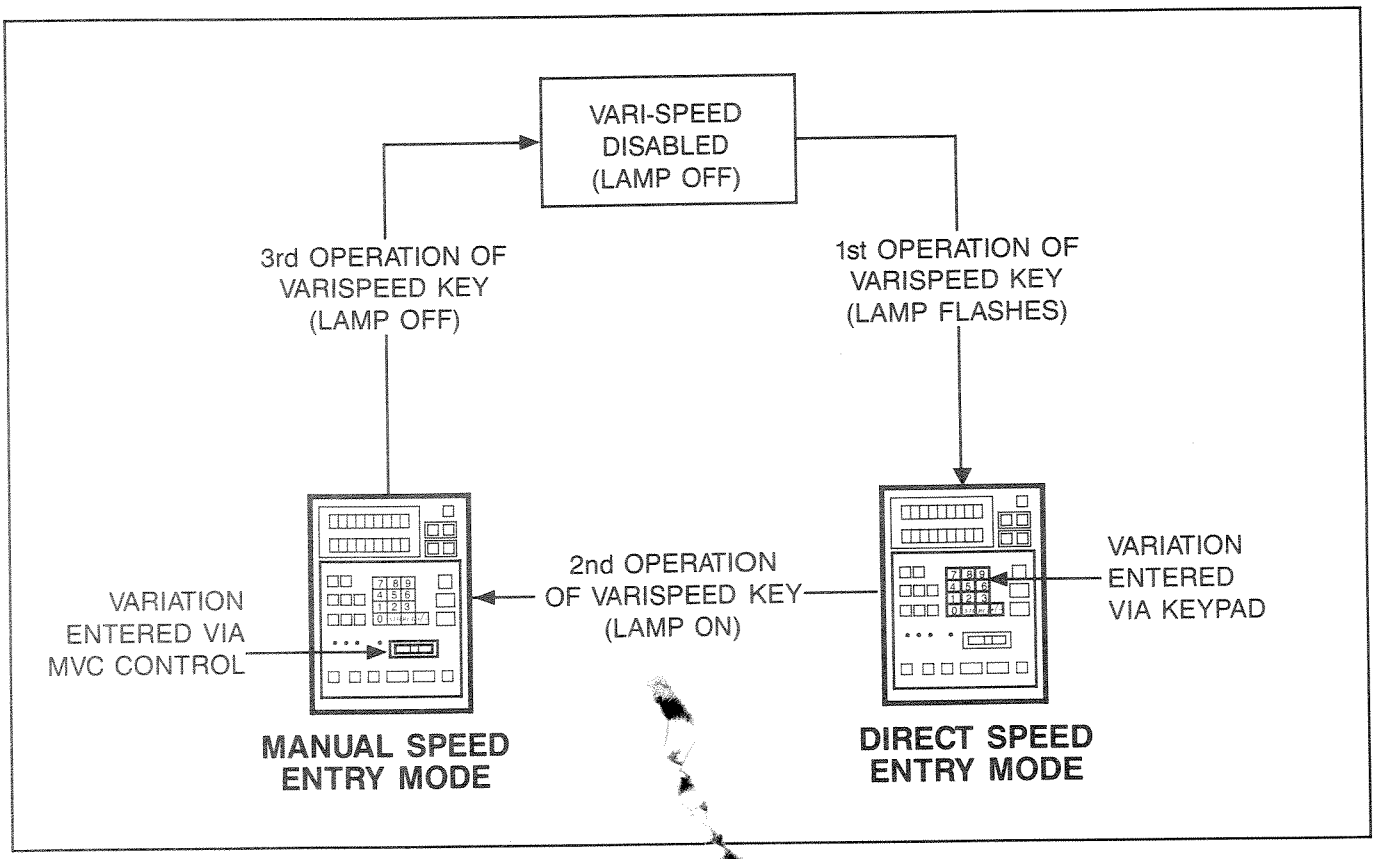

Figure 4-3. VARIABLE SPEED Modes

Moving this control to the right causes the percentage to increase (become more positive), while moving it to the left causes the percentage to decrease.

In MANUAL SPEED ENTRY mode, the VARI SPEED value can be displayed, if so desired, in terms of semitones up or down and inches per second. This display can be invoked by presetting Storage Location 41 to a value of 1. It should be noted that the semitone values are displayed only in increments of 0.25 semitones.

When the VARISPEED value is entered in MANUAL SPEED ENTRY mode, the transport automatically plays at the modified speed, no further action being necessary. To exit VARI SPEED, the VARI SPEED key should be pressed.

TC GEN

Time Code can be recorded from either an internal or an external reference. Further, the Time Code data can be either VITC (Vertical Interval Time Code) or LTC (Longitudinal Time Code). The TC GEN (TIME CODE GENERATOR) key is used to select the desired reference and data options for the Time Code Generator by cycling through three mutually exclusive modes, each of which is identified by the condition of the key indicator.

At power-up, the TC GEN indicator is not illuminated, and this condition indicates that, when activated, the generator will record Time Code in accordance with external reference and data. It should be noted that Storage Location 37 must be preset in accordance with the external reference, i.e.:

LOCATION 37	0 = LTC data
	1 = VITC data

From the state described above, pressing TC GEN causes the key indicator to flash on and off, showing that the recorded Time Code will be in step with the external reference (selected in accordance with Location 37), but can be started from a preset internal start time.

NOTE: The Time Code Channel must be in RECORD READY before the entered Time Code can be transferred in the manner described below.

The desired start time can be preset by entering the time into the LOCATE TIME display via the numeric keypad, and then moving it into the TAPE TIME display by pressing the TRANSFER UP key.

From the flashing-key mode, the next operation of the TC GEN key causes the key indicator to become

TC GEN INDICATOR	TIME CODE REFERENCE	TIME CODE DATA
OFF (Power-up default)	EXTERNAL As selected in Storage Location 37 0 = LTC DATA 1 = VITC DATA	EXTERNAL
FLASHING	EXTERNAL As selected in Storage Location 37 0 = LTC CLOCK 1 = VITC CLOCK	INTERNAL START POINT
ON	INTERNAL	INTERNAL START POINT

Table 4-1. Time Code Options

solidly illuminated, showing that the generated Time Code will be in accordance with internal reference and start point. In this mode, Storage Location 37 has no bearing, but Storage Locations 31 and 32 must be preset in accordance with the desired Time Code type, as follows:

NOTE: Where EBU or FILM Time Code types are selected, Storage Location 32 is automatically set to a value of 0.

Storage Location 31: 0 = SMPTE
1 = EBU
2 = FILM

Storage Location 32: 0 = Non-Drop Frame
1 = Drop Frame

CAUTION: The internal crystal references for SMPTE NDF, EBU, and FILM Time Code types is accurate to ± 50 ppm. Where SMPTE DF Time Code generation is required, it is advisable to use an external reference (house video). All SMPTE Time Code produced by the internal generator is at 30 Frames/sec.

Once the Time Code parameters have been set, as described above, the generator is activated by pressing PLAY and RECORD simultaneously.

TAPE TIME

The **TAPE TIME** display provides tape time information in either one of two formats, the format depending upon whether or not the TC DISPLAY key is selected.

Where TC DISPLAY is not selected, the key is extinguished, and the **TAPE TIME** display shows a real time representation of tape position. The format for this display is:

Hh Mm Ss n

in which: H = tens of hours
h = hours
M = tens of minutes
m = minutes
S = tens of seconds
s = seconds
n = tenths of seconds

Where TC DISPLAY is enabled, TC DISPLAY is illuminated, and the **TAPE TIME** display shows either the external Time Code presented to the machine (STOP mode) or the internal Time Code from tape (modes other than STOP), the format in this case being:

Hh. Mm. Ss. Ff.

in which Hh, Mm, and Ss remain as defined above, but F = tens of frames and f= frames.

LOCATE TIME

This display is used for all generalized data entry and recall procedures. The machine will LOCATE to the time presented in this display. In addition, other information which may be monitored on this display are STO (STORE) and RCL (RECLAIM) setup/confirmation and VARI SPEED percentage, inches per second, and semitones

TC DISPLAY

This key is used to toggle the **TAPE TIME** display between TIME CODE DISPLAY and TAPE TIME, becoming illuminated when TC DISPLAY is selected.

R

Each of the time displays has an associated R (RESET) key. When pressed, the upper R key clears the **TAPE TIME** display down to 00.00. Similarly, the lower R key clears the **LOCATE TIME** display.

↑ and ↓

The Up/Down arrow keys allow location and time data to be transferred between displays. Pressing ↓ transfers the contents of the **TAPE TIME** display down to the **LOCATE TIME** display, and can be used to capture tape time or Time Code information. Pressing ↑ transfers the contents of the **LOCATE TIME** display up to the **TAPE TIME** display, allowing the Time Code recording start point or the tape time position to be preset.

CHASE

The CHASE (follow and lock) facility provides for synchronization of the machine to an external Time Code reference, a necessary pre-requisite being that the external Time Code reference be of the same type as that on the tape. Provision is made for offsetting so that either Slave is ahead of Master or vice versa. Refer to Storage Locations 00 and 98 for Frame and Bit offsets respectively.

The external Time Code reference can be either LTC or VITC, and the External Lock Reference must be entered into Storage Location 37, as follows:

LOCATION 37 0 = Longitudinal Time Code
1 = Vertical Interval Time Code

Once the desired offset and External Lock Reference have been entered, CHASE is pressed to enable the facility. When CHASE is first pressed, the indicator flashes on and off to show that the mode is selected but that the Master and Slave machines are not locked. Once lock is attained, the indicator becomes solidly illuminated.

SPOT

The SPOT (SPOT ERASE) key disables the record head but leaves the erase head on so that tape can be erased (with no bias frequency from the record circuitry). When SPOT is pressed, the key flashes to indicate that this mode is armed.

Once armed, the SPOT ERASE mode can be entered by pressing RECORD, so long as at least one channel is in RECORD READY. The erase head will turn on, this being indicated by the Meter Housing **ERASE** indicators for all active channels becoming illuminated. At this time, the desired section of tape can be erased by passing it manually over the erase head. To cancel SPOT ERASE, STOP should be pressed.

LOCAL and NETWORK

The LOCAL and NETWORK keys are used to select the transport control source. Each of these keys becomes illuminated when selected.

When LOCAL is selected, all transport control is derived from the panel keys or from a parallel remote control.

When NETWORK is selected, machine control originates from the network (serial remote control), and the machine transport and audio controls are all disabled. In this mode, the STOP key remains effective, thus providing a means of stopping the transport in emergencies.

If both LOCAL and NETWORK are selected (BOTH mode), parallel control is available from either the serial remote control or from the machine panel keys on a first come, first served basis.

4.2.1.1 Numeric Keypad

The Numeric Keypad section of the Transport Control Panel is used to make numeric entries, to store data, and to reclaim data. The functions of all of the keypad controls are described briefly below.

+/−

Pressing +/− reverses the sign of the contents of the **LOCATE TIME** display. Where it is desired to change the sign of the **TAPE TIME** display value, it can be transferred down into the **LOCATE TIME** display, changed, and then transferred back up to **TAPE TIME**.

0 through 9

These keys provide the means of entering specific values into the **LOCATE TIME** display. They also are used in conjunction with STO and RCL to store and reclaim data to and from Memory and Storage locations.

STO and RCL

The STO (STORE) and RCL (RECALL) keys are used in conjunction with the numeric keys to store and reclaim data to and from Memory and Storage locations.

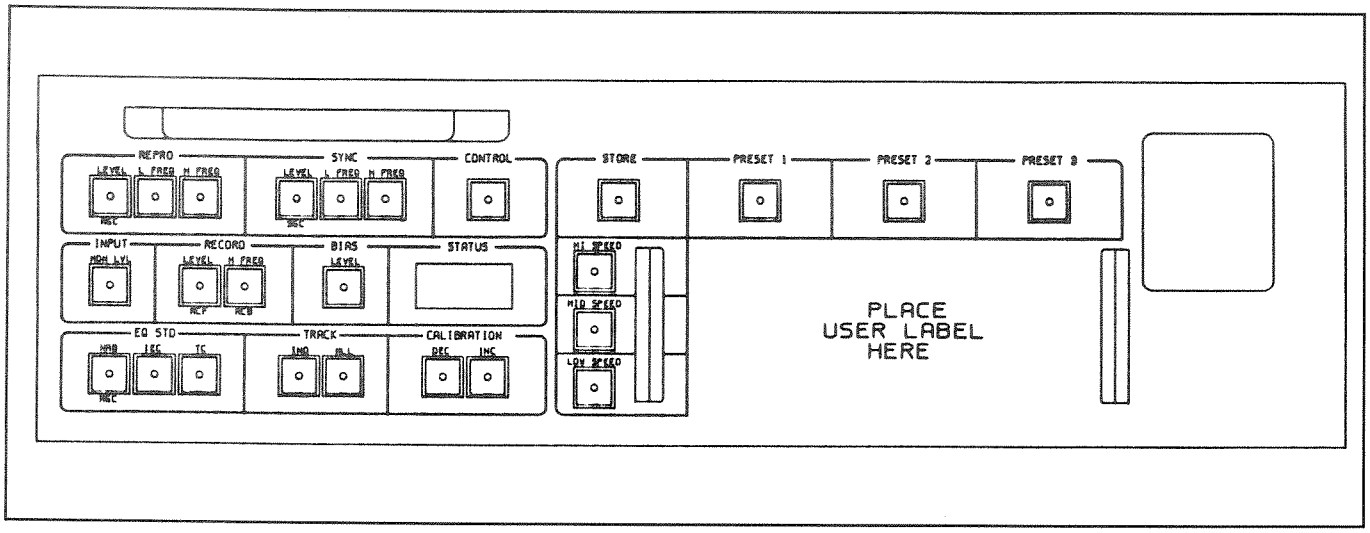

Figure 4-4. Alignment Control Panel

4.3 ALIGNMENT CONTROL PANEL

This section describes the operations associated with the Alignment Control Panel (Figure 4-4). It should be noted that four of the keys on this panel have secondary functions, these being indicated by means of blue markings below the keys.

4.3.1 Alignment Procedures

In general, the machine's alignment procedure is much the same as that for the traditional professional analog recorder. However, it differs in that it does not require manual adjustments, all parameter selection and calibration being performed by keystroke operations. In general, the alignment procedure follows the sequence shown in Figure 4-5.

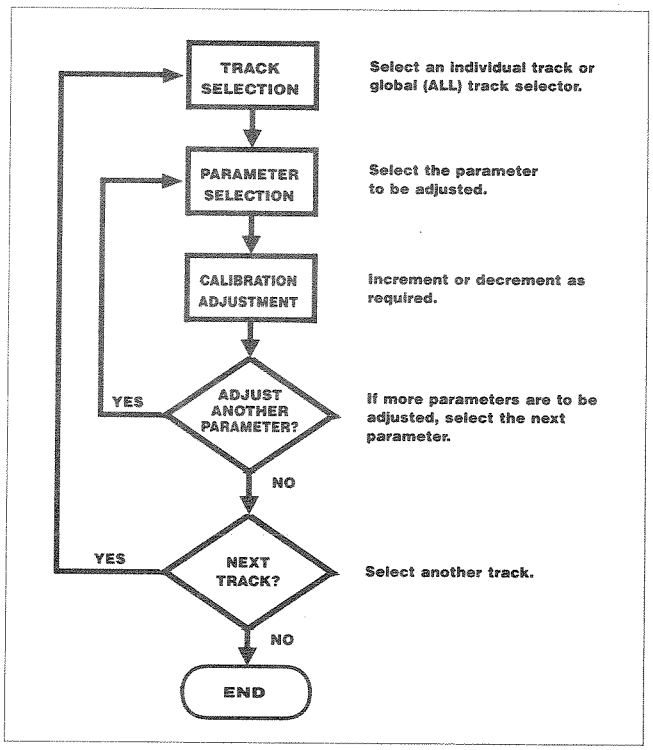

Figure 4-5. Alignment Procedure Flow Chart

4.3.2 STATUS Display

This two-digit display indicates either the track that is selected for calibration or a specific parameter value, a single digit indication denoting the track being adjusted. When any parameter is selected, both decimal points become illuminated and the display shows a two-digit hexadecimal number which is representative of the parameter value.

00 to FF	Indicate the hex value of a specific alignment function
ALL	Selects all tracks to be active
1	Track 1 active
2	Track 2 active
3	Track 3 active
PE	Preset Error
HI	Headstack Invalid
HE	Headstack Error
HO	Headstack Off

Table 4-2. Status Display Codes

It should be noted that the hexadecimal values shown in the display are not intended for use in setting absolute parameter values. Parameters should be adjusted in accordance with the appropriate meter indications, the hexadecimal values being used primarily for storage purposes.

As well as performing the functions described on the preceding page, the **STATUS** Display is used to show error codes. Table 4-2 lists all of the possible display indications, and Appendix A to the **APR-5000** Series Operation and Maintenance Manual further describes the error codes.

4.3.3 Track Selection

Track selection is made by means of the IND and ALL keys on that section of the panel labelled **TRACK**.

IND

Selects an individual track for adjustment. The first operation of the key selects Track 1, and each subsequent operation advances the selection to the next track. When pressed while CONTROL is held down (in the same manner as a typewriter shift key), IND moves the selection back to the preceding track.

ALL

This key selects both audio tracks for calibration. It does NOT select the time code track.

4.3.4 Parameter Selection

The ten parameter selection keys are located on the **REPRO** (3 keys), **SYNC** (3 keys), **INPUT** (1 key), **RECORD** (2 keys) and **BIAS** (1 key) sections in the upper left corner of the panel. These sections are discussed below.

REPRO

The three keys in this section are used in calibrating the reproduction circuitry.

LEVEL

This key selects the **REPRO** output level for calibration. A secondary function is associated with this key, this being **RGC** (REPRO GAP COMPENSATION).

L. FREQ

Selects **REPRO** Low Frequency Equalization adjustment.

H. FREQ

Selects **REPRO** High Frequency Equalization adjustment.

SYNC

The three keys in this section are used in calibrating the **SYNC** circuitry.

LEVEL

This key selects the **SYNC** output level for calibration. The secondary function for this key is **SGC** (SYNC GAP COMPENSATION).

L. FREQ

Selects **SYNC** Low Frequency Equalization adjustment.

H. FREQ

Selects **SYNC** High Frequency Equalization adjustment.

INPUT

The **INPUT** section has only one key.

MON LVL

With this key selected, the **INPUT** level is chosen for adjustment.

RECORD

The two keys in this section are used in calibrating the RECORD circuitry.

LEVEL

Selects RECORD level for calibration. Pressing this key also causes the selected track(s) to enter the RECORD READY Mode. This key also controls the secondary function **RCF** (RECORD FEED FORWARD).

H. FREQ

Selects the record circuitry High Frequency gain for calibration. Also controls the secondary function **RCB** (RECORD FEED BACK).

BIAS

The **BIAS** section also has only one key.

LEVEL

When this key is selected the bias signal amplitude is selected for adjustment.

4.3.5 Audio Parameter Calibration Adjustment

The **CALIBRATION** section of the panel has two keys which are used to make the desired adjustments after both the track and the parameter have been defined.

DEC

The first operation of this key causes the selected parameter to start decrementing at a rate of about 1 dB per second. Decrementation continues until either the end of the range (00) is reached or until **DEC** is pressed again. Rapid decrementing can be performed by holding down the **CONTROL** key and pressing **DEC** .

INC

The first operation of this key causes the selected parameter to start incrementing at a rate of about 1 dB per second. Incrementation continues until either the end of the range (FF) is reached or until **INC** is pressed again. Rapid incrementing can be performed by holding down the **CONTROL** key and pressing **INC** .

NOTE: When incrementing the parameters **RECORD** **H. FREQ** , **REPRO** **L. FREQ** , or **SYNC** **L.FREQ** , the value displayed on the **STATUS** Display becomes lower, even though the audio level is increasing. Similarly, decrementing these three parameters causes the displayed value to become greater as the audio level becomes lower. This is true only for these three adjustments. All others will show increasing values when incremented and reducing values when decremented.

4.3.6 Equalization Standards

The three Equalization Standard keys are located on the **EQ STD** section of the panel. The Equalization Standard for the audio tracks can be changed only when **ALL** is selected on the **TRACK** Section of the panel, and that for the Time Code track can be changed only when the Time Code track is selected.

NAB

This key selects NAB equalization for the audio tracks. **NAB** cannot be selected for a transport operating at 30 ips, because no NAB equalization standard exists for this speed.

IEC

This key selects **IEC**, and is the default value for 30 ips operation.

TC

This key selects a special equalization standard which is best suited for digital data stream transmissions such as Time Code or automation data. This equalization is totally unsuitable for the audio channels and should be used only for the Time Code track.

4.3.7 Alignment Presets

The three PRESET keys are located along the upper right edge of the panel, and these are used for storing alignment-related data into memory for later recall. These memory functions are used to allow for multiple tape formulation, alternative reference fluxivities, alternative over-bias settings, alternative equalization standards, or any desired combinations of the above.

In addition to the PRESET keys, the **CONTROL** and **STORE** keys also are used in the storage process.

Nine memory locations are provided for any given headstack, this allowing three locations for each of the three tape speeds, and the User Label provides a means of recording the parameters stored for a specific headstack.

CONTROL

This key calls up the secondary functions for those keys marked with blue silkscreen labels. These secondary functions become valid only when ALL channels are selected and **CONTROL** is pressed.

CONTROL also is used to arm the STORE function. When **CONTROL** is pressed simultaneously with **STORE** (in the same manner as the shift key on a typewriter), it causes the STORE function to become armed, this being indicated by the illumination of the **STORE** key.

STORE

This key is used to store the current adjusted values into one of the three PRESET memory locations.

As a safety feature, this key can be activated only in conjunction with **CONTROL** . When the function is armed, (**CONTROL** and **STORE** pressed simultaneously) the **STORE** key becomes illuminated, and pressing any PRESET key erases the previously stored data and replaces it with the current adjusted value.

PRESET 1 , **PRESET 2** and **PRESET 3**

These PRESET keys are used to either store new data into memory (**STORE** function is armed) or recall previously stored data from memory (**STORE** function

	TAPE TYPE _____ FLUXIVITY _____ nWb/m EQ STD _____ OVERBIAS _____ dB@ _____ kHz	TAPE TYPE _____ FLUXIVITY _____ nWb/m EQ STD _____ OVERBIAS _____ dB@ _____ kHz	TAPE TYPE _____ FLUXIVITY _____ nWb/m EQ STD _____ OVERBIAS _____ dB@ _____ kHz
	TAPE TYPE _____ FLUXIVITY _____ nWb/m EQ STD _____ OVERBIAS _____ dB@ _____ kHz	TAPE TYPE _____ FLUXIVITY _____ nWb/m EQ STD _____ OVERBIAS _____ dB@ _____ kHz	TAPE TYPE _____ FLUXIVITY _____ nWb/m EQ STD _____ OVERBIAS _____ dB@ _____ kHz
	TAPE TYPE _____ FLUXIVITY _____ nWb/m EQ STD _____ OVERBIAS _____ dB@ _____ kHz	TAPE TYPE _____ FLUXIVITY _____ nWb/m EQ STD _____ OVERBIAS _____ dB@ _____ kHz	TAPE TYPE _____ FLUXIVITY _____ nWb/m EQ STD _____ OVERBIAS _____ dB@ _____ kHz

Figure 4-6. User Label

NOT armed). Where PRESET data is being used, this is indicated by the appropriate PRESET key remaining illuminated.

NOTE: If any PRESET key for which there is no previously stored value is pressed, the **STATUS** Display will indicate "PE" (Preset Error).

4.3.8 User Label

The User Label (Figure 4-6) provides a pre-formatted writing surface which can be used to record the results of a particular calibration. Nine alternative alignments are available, three for each tape speed. Since these software calibrations are unique to each headstack, this user card travels with its corresponding headstack. When tape format, head and guide changes are required, the label changes accordingly. Once calibrated for a particular headstack these calibrations need not be repeated each time a format change is required. The headstack identification code allows the machine to call up the correct grouping of alignment presets.

4.3.9 Speed Select Keys

The Speed Select keys, HI SPEED, MID SPEED and LOW SPEED, are located directly to the left of the User Label. These keys offer an alternative to the SPEED key as a means of entering the desired transport speed. However, unlike SPEED (which is used to cycle through all of the available speeds), each of these keys selects a separate transport speed. As an indication of the selected speed, the appropriate Speed Select key becomes illuminated, together with the appropriate **TAPE SPEED** indicator on the Transport Control Panel.

It should be noted that, as a different speed is selected (either at the Alignment Control Panel or with the SPEED key), the stored PRESET and EQ STD parameters are selected automatically to agree with the new speed.

4.3.10 Secondary Functions

As has been previously stated, four of the keys on the Alignment Control Panel have secondary functions, these being denoted by their blue labels. Although not used in normal alignment procedures, these secondary functions allow for adjustments which provide a flexibility rarely encountered in traditional analog recorders.

The secondary functions are activated by holding down CONTROL while pressing the appropriate key. Where a secondary function is selected, both CONTROL and the secondary function key become illuminated to indicate that the secondary function is in effect.

Of the four secondary functions, **RGC** and **SGC** are concerned with adjustments necessitated by differing head gaps. Adjustment of the gap compensation setting normally becomes necessary if heads of significantly different gap-width are used. Further, should extensive relapping of tape heads cause a change in high frequency performance, the gap compensation setting should be adjusted.

The remaining secondary functions, **RCF** and **RCB** are related to the type of tape being used. These alignments are used to adjust the RECORD frequency response so that the playback will be flat over a wide range of diverse tape formulations.

Table 4-3 lists the appropriate settings for various tapes at three different speeds, these settings being given in terms of the hex values shown on the **STATUS** Display.

RGC

REPRO GAP COMPENSATION (**RGC**)is the secondary function associated with the **REPRO** **LEVEL** key. When **RGC** is selected, compensation can be made for the high frequency loss caused by the Repro head gap. This is a useful alignment, because it allows headstacks of differing construction and gap widths to be adjusted for optimum performance with a variety of different tape types. For **RGC** settings, refer to the appropriate headstack specifications.

SGC

SYNC GAP COMPENSATION (**SGC**) is the secondary function for the **RECORD** **LEVEL** key. When **SGC** is selected, the high frequency loss caused by the Sync head gap can be adjusted out. For **SGC** settings, refer to the appropriate headstack specifications.

TAPE TYPE		30 IPS	15 IPS	7.5 IPS
3M Scotch 226	RCF	C0	CB	C4
	RCB	C1	C7	C4
3M Scotch 250	RCF	C0	CB	C4
	RCB	C2	C7	C4
AGFA 469	RCF	C0	CB	C4
	RCB	C1	C7	C4
Ampex 456	RCF	C0	CB	C4
	RCB	C1	C7	C4
BASF LGR50	RCF	C0	CB	C4
	RCB	C1	C7	C1
AGFA PER528	RCF	C0	CB	C6
	RCB	C2	C7	C2
AGFA LGR30	RCF	C0	CB	C6
	RCB	C2	C7	C2
3M Scotch 176	RCF	C0	C8	C4
	RCB	C2	C7	C4

Table 4-3. RCB and RCF Settings

RCB

RECORD FEED BACK (RCB) is the secondary function for **RECORD** **HI-FREQ** . This selects the RECORD FEED BACK compensation adjustment.

RCF

RECORD FEED FORWARD (**RCF**) is the secondary function for **RECORD** **LEVEL** . This selects the RECORD FEED FORWARD compensation adjustment.

4.4 METER HOUSING CONTROLS

This section describes all of the Audio channel and Monitor speaker controls and indicators. These controls, used in conjunction with those on the Transport Control and Alignment Control Panels, comprise all of the audio controls for the **APR-5000**.

4.4.1 Audio Channel Functions

As illustrated in Figure 4-7, each audio channel is subdivided into six major sections, these being: **ALN** (Alignment Select Indicator), **RECORD**, **MONITOR**, **RECORD LEVEL**, **OUTPUT LEVEL** and **VU** Meter.

ALN

The **ALN** section contains a single, amber **SELECTED** indicator which becomes illuminated to show that this particular audio channel is selected during any adjustment at the Alignment Control Panel. When **ALN** is selected for any channel, all of the controls for that channel, except for **RECORD** **READY** , become disabled.

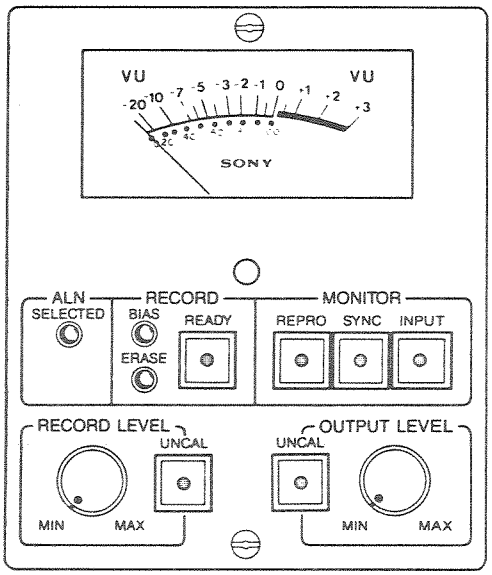

Figure 4-7. Audio Channel Controls

RECORD

The **RECORD** block contains two status indicators and one key. The **BIAS** and **ERASE** indicators become illuminated to show which, if any, of these functions is currently active. During a normal recording operation, both of these indicators become illuminated. During **SPOT ERASE**, the **BIAS** indicator is extinguished to show that the record head bias is turned off, and the **ERASE** indicator is illuminated to show that the erase head is active.

The READY key is used to set the channel into RECORD READY before the transport is placed in RECORD mode. When READY is selected, the key becomes illuminated to indicate that the channel is ready to record.

MONITOR

The MONITOR block contains three keys which are used to select the source of the audio channel output.

REPRO

When REPRO is pressed, it becomes illuminated to indicate that the audio channel output is being derived from the reproduce head.

SYNC

When SYNC is selected, it illuminates to indicate that the audio channel output is being derived from the sync (or cue) head. During a RECORD operation, this will be the same as INPUT. During a PLAY operation, the playback signal will come from the sync head instead of the repro head.

INPUT

When INPUT is selected, the key illuminates to indicate that the audio channel output is derived directly from the audio channel input.

RECORD LEVEL

The recording level can be either internally preset or controlled from the rotary level control on the **RECORD LEVEL** section of the panel, selection between these options being made by means of the UNCAL (UNCALIBRATED) key on the same panel section.

UNCAL

When this key is selected, it becomes illuminated to show that the recording level is UNCALIBRATED, i.e. it can be controlled by adjustment of the **RECORD LEVEL** rotary control. When the UNCAL key is extinguished, the control is ineffective, and the recording level is adjusted by the internal preset level.

OUTPUT LEVEL

The **OUTPUT LEVEL** section is similiar to the **RECORD LEVEL** section, differing only in that it controls the channel's audio output level rather than its recording level.

VU Meter

Each audio channel incorporates a **VU** Meter with a range of −20VU to +3VU. The meters are preset at the factory so that an indication of 0 VU corresponds to a level of +4 dBu. (0dBu = 0.775 vrms). If so desired, this reference can be changed by an adjustment on the CNL (channel) board, the procedure being as given in the **APR-5000** Operation and Maintenance Manual.

The **VU** Meter monitors the signals selected at the **MONITOR** section, i.e. when INPUT is selected, the **VU** Meter indicates the audio channel input level, etc.

4.4.2 Monitor Speaker

The machine is fitted with a Monitor Speaker whose output is derived from the signal(s) displayed on the **VU** Meter(s). Track 1, Track 2, or both tracks can be selected by pressing the appropriate key(s), these keys becoming illuminated to indicate the track(s) being monitored. When both keys are selected, the input signals are summed in the monitor amp. The **LEVEL** control is used to adjust the volume of the monitored signal.

4.5 STORAGE LOCATION RELATED OPERATIONS

Paragraphs 4.5.1 through 4.5.4 describe various Storage Location related operations, these being RESOLVE ON PLAY, PREVIEW/EDIT/REVIEW, TRIGGERED EDIT SYNCHRONIZATION and FIND. All of these operations require argument or time entries into various Storage Locations. Paragraphs 4.6 through 4.6.4 give the specific procedures used for making these entries.

4.5.1 RESOLVE ON PLAY

The PLAY operation can be preset to RESOLVE, which establishes and maintains data independent synchronism between the Time Code from tape and some external reference. Being data independent, this occurs in a manner which is independent of any offset. The external reference can be either Longitudinal Time Code (LTC) or a video signal or ex-

INPUT SIGNAL	TIME CODE ON TAPE			
	SMPTE NDF	SMPTE DF	EBU	FILM
LTC @ 30 f/s	Resolve	+0.1%	n/a	n/a
60 Hz NTSC B¿W Video	Resolve	+0.1%	n/a	Resolve*
LTC @ 29.97 f/s	−0.1%	Resolve	n/a	n/a
59.54 Hz NTS Color Video	−0.1%	Resolve	n/a	−0.1%*
LTC @ 25 f/s	n/a	n/a	Resolve	n/a
50 Hz PAL/SECAM Video	n/a	n/a	Resolve	n/a
LTC @ 24 f/s	n/a	n/a	n/a	Resolve

***NOTE:** One of the most interesting applications of RESOLVE ON PLAY is the ability to resolve 60 Hz input reference signals to the 24 f/s Film Time Code, by maintaining a 4:5 Time Code to reference signal resolving ratio.

Table 4-4. Resolve Capabilities

ternal tone. RESOLVE ON PLAY is initiated by presetting Storage Locations 37 and 39 as follows:

Storage Location 39	Set to 1 to initiate the mode
Storage Location 37	Set to 0 for Longitudinal Time Code reference Set to 1 for Video signal or Tone reference

4.5.1.1 Resolve Capabilities

Table 4-4 shows the resolve capabilities of the machine. The percentage values in the table indicate the deviation from the nominal recorded tape speed at which the transport will operate in Play-Resolve mode. The non-applicable (n/a) pairings shown in the table are those with more substantially mis-matched clock rates. These pairings do not provide reliable or repeatable results.

4.5.2 PREVIEW, EDIT AND REVIEW

These facilities provide a series of editing operations, as follows:

PREVIEW — Allows the user to rehearse the edit, without actually recording the changes.

EDIT — Performs the edit and records the results.

REVIEW — Allows the user to monitor the results of the edit.

In any of the editing modes, IN POINT, OUT POINT, PREROLL DURATION and POSTROLL DURATION must be defined:

IN POINT	—	Start of edit
OUT POINT	—	End of edit
PREROLL DURATION	—	Time that tape rolls before the IN POINT is reached.
POSTROLL DURATION	—	Time that tape continues to roll after the OUT POINT is passed.

It should be noted that, where no IN POINT, OUT POINT, PREROLL DURATION and/or POSTROLL DURATION values are entered, these parameters will default to the most recent values entered into the appropriate Storage Locations.

Initiating PREVIEW, EDIT or REVIEW causes the following events to occur:

PREVIEW and EDIT causes both audio channels to monitor the Sync head.

REVIEW causes both audio channels to monitor the Repro head.

In PREVIEW and REVIEW, the PLAY key flashes to indicate that the operation is cued and ready to perform the remainder of the process.

In EDIT, the PLAY and RECORD keys flash to indicate that the operation is cued and ready to perform the remainder of the process, which may include a RECORD operation.

4.5.2.1 PREVIEW

The PREVIEW facility provides a rehearsal mode in which the user can adjust the IN POINT, OUT POINT, PREROLL DURATION and POSTROLL DURATION for an edit. In PREVIEW, the recording facility is inhibited globally, and the Record-Readied tracks do not enter RECORD.

The following procedure is used to initiate PREVIEW. Additional steps relating to fine adjustment of the IN POINT and OUT POINT are given in paragraph 4.5.2.1.1

STEP 1 Set the desired audio channel(s) into RECORD READY.

STEP 2 Enter the desired IN POINT time into Storage Location 01.

STEP 3 Enter the desired OUT POINT time into Storage Location 02.

STEP 4 Enter the PREROLL DURATION time into Storage Location 51.

STEP 5 Enter the POSTROLL DURATION time into Storage Location 52.

STEP 6 Set Storage Location 95 to 1 to enable PREVIEW. At this time the machine automatically cues to the appropriate preroll position ahead of the IN POINT. Once the machine is cued, the PLAY key flashes on and off to indicate that the machine is ready.

NOTE: The machine is preprogrammed with an Acceleration Allowance which allows time for the transport to reach the selected speed. Because of this, the machine always cues to a position slightly ahead of the nominal preroll point.

STEP 7 Press PLAY to start the PREVIEW operation. It should be noted that the operation can be cancelled at any time by pressing STOP.

NOTE: The PREVIEW, EDIT AND REVIEW operations can be actuated by an external Time Code trigger. This method of operation is described in paragraph 4.5.3.

4.5.2.1.1 IN POINT and OUT POINT Bit Delays

To allow for very precise settings, the IN POINT and OUT POINT times can be delayed for up to one frame in one-bit (1/80th frame) increments. A number (up to 79) entered into Storage Location 91 causes the IN POINT to be delayed by that number of bits. Similarly, a number (up to 79) entered into Storage Location 92 delays the OUT POINT.

4.5.2.2 EDIT

The EDIT operation is similar to PREVIEW in that IN POINT, OUT POINT, PREROLL DURATION, and POSTROLL DURATION are set in the same manner, but differs in that the results of the EDIT become recorded.

The procedure for initiating EDIT remains the same as for PREVIEW, except that STEP 6 becomes:

STEP 6 Set Storage Location 96 to 1 to enable EDIT. At this time the machine automatically cues to the appropriate preroll position ahead of the IN POINT. Once the machine is cued, the PLAY and RECORD keys flash on and off to indicate that the machine is ready.

4.5.2.3 REVIEW

REVIEW allows the user to listen to the results of the edit after it is completed. To initiate the review, the IN POINT, OUT POINT, PREROLL DURATION and POSTROLL DURATION parameters are left unchanged after the edit. All that is required is to set Storage Location 97 to 1 and then, when the PLAY key begins to flash, press PLAY.

4.5.3 TRIGGERED EDIT SYNCHRONIZATION

Any of the three Edit sequences can be actuated automatically by being triggered from the external reference. In this mode, it it not necessary to set the audio tracks into RECORD READY, and the IN POINT and OUT POINT only define the duration of the synchronous operation.

It is most important to note that, for successful operation in this mode, the external reference must be presented to the machine in a reasonably accurate real time manner during the preroll time period.

The procedure used to enter TRIGGERED EDIT SYNCHRONIZATION is as follows:

STEP 1 Enter the desired OFFSET, IN POINT, OUT POINT, PREROLL DURATION and POSTROLL DURATION times into storage Locations 00, 01, 02, 51 and 52 respectively.

STEP 2 Set Storage Location 43 to 1 to enable TRIGGERED EDIT SYNCHRONIZATION.

STEP 3 Set Storage Location 37 to the appropriate ESTABLISH LOCK reference.

0 = Longitudinal Time Code
1 = Vertical Interval Time Code

(This selects the source from which the machine establishes synchronism ahead of the IN POINT.)

STEP 4 Set Storage Location 38 to the appropriate MAINTAIN LOCK reference. (This selects the source from which the machine maintains lock after the IN POINT.)

0 = External LTC, Data Independent
1 = External LTC, Data Dependent
2 = Video signal or external Tone, Data Independent
3 = VITC, Data Dependent

STEP 5 Set the appropriate Storage Location to 1 to actuate the desired facility.

Storage Location 95 = PREVIEW
Storage Location 96 = EDIT
Storage Location 97 = REVIEW

As STEP 5 is completed, the machine automatically cues to the appropriate position ahead of the IN POINT. Once the machine is cued, the **PLAY** key flashes on and off, and the machine begins to monitor the ascending Time Code reference (Establish Lock Reference). At Lock Actuation Time the controlled device is triggered automatically to synchronize its own internal LTC from tape with the selected External Time Code reference. Figure 4-8 illustrates the TRIGGERED EDIT SYNCHRONIZATION operation.

The Lock Actuation Time is defined as follows:

Lock Actuation Time = IN POINT
– (PREROLL DURATION + SYNC OFFSET)

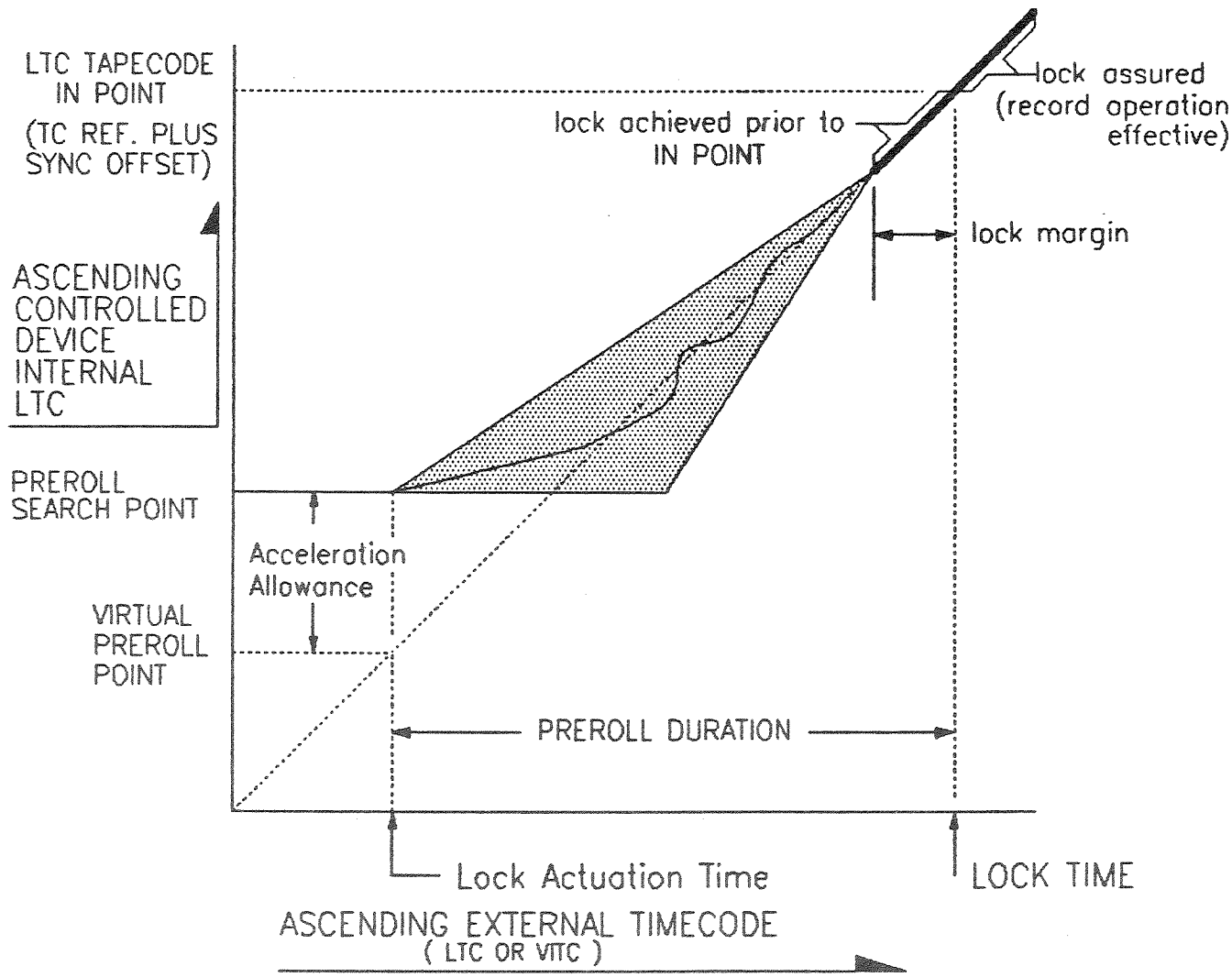

Figure 4-8. Triggered Edit Synchronization

4.5.4 FIND

Some tapes may include a number of live action audio sequences, each starting with a different Longitudinal Time Code. This is frequently the case where audio for Film is recorded, each Take starting with with a Time Code which corresponds to the time of day at which it was recorded. Consequently, these sequences begin at widely separated time-of-day start points.

FIND is a feature that aids in the LOCATE process, allowing speedy access to a Time Code location among any number of discontiguous Takes.

At full speed wind, the **APR-5003V** does not read Time Code, but interpolates Time Code from the counter roller. When performing a LOCATE, FIND enables the machine to slow down periodically, sample the tape Time Code, and update it's interpolated position. Each time the transport is required to change LOCATE direction, the distance between samples is halved, and, in this manner, the transport can approach its target location quickly and accurately.

FIND can be activated by setting Storage Location 93 to any value other than 0. For speediest operation, it is desirable to set the Storage Location to a value roughly equal to the length (in minutes) of the Take durations on the tape. (Values greater than 10 will be truncated internally to a value of 10.) The preset value is not critical in any way, since the FIND process itself is not critical, but presetting the duration between the Time Code updates allows the process to be performed in a shorter time.

4.5.4.1 FIND Operation

The following procedure presupposes a situation in which the user wishes to find the audio corresponding to the film starting at 15:12:02:00, on a tape which has many Takes of about 3:20 minutes each. Intermixed with these Takes, there are several which were cut to be significantly shorter.

The procedure to be used in this instance would be:

STEP 1 Set Storage Location 93 to 3 to enable FIND.

STEP 2 Enter the desired LOCATE time of 15:12:02:00.

STEP 3 Press LOCATE . This causes the machine to locate to the desired tape position, regardless of the breaks in the Time Code data.

4.6 STORE/RECALL SEQUENCE OPERATIONS

The following paragraphs define the procedures to be used for STORE and RECALL operations. It should be noted that procedures differ somewhat for different Storage Locations, but that all procedures have these two things in common when entering the two-digit Storage Location codes

a. If the first digit is entered incorrectly, RCL (or STO) can be pressed and the entry can be started again.

b. If more than three seconds elapses between entering the first and second digits, **LOCATE TIME** will revert to is former display.

A complete index of Storage/Recall Registers is given in Appendix A to this Supplement.

4.6.1 Locations 00 through 29 — Position Registers
Location 50 — Acceleration Allowance Preset
Location 51 — PREROLL DURATION Preset
Location 52 — POSTROLL DURATION Preset

For these Storage Locations, the STORE and RECALL functions are separate entities and can be invoked independently.

4.6.1.1 RECALL Procedure

STEP 1 Press RCL .

STEP 2 At the Numeric Keypad, enter the two digits representing the desired Storage Location. The two-digit code becomes displayed for a short time, then the display shows the value currently stored in the selected Storage Location.

4.6.1.2 STORE Procedure

STEP 1 Verify that the time data to be stored is shown in the **LOCATE TIME** display. (This may be recalled data or newly entered data.)

STEP 2 Press STO . Note that the time data remains displayed.

STEP 3 At the Numeric Keypad, enter the two digits representing the desired Storage Location. The two-digit code becomes displayed for a short time, then the display shows the time data which has been stored in the selected Storage Location.

It should be noted that this data is non-volatile, and remains in memory, even when machine power is removed.

4.6.2 Locations 30 through 49 — Enables and Selects

Location 91 — IN POINT Bit Delay
Location 92 — OUT POINT Bit Delay
Location 93 — FIND Enable
Location 95 — PREVIEW Enable
Location 96 — EDIT Enable
Location 97 — REVIEW Enable

For any of these locations, a new argument can be entered only after the current stored value has been reclaimed.

4.6.2.1 RECALL and/or STORE Procedure

STEP 1 Press RCL .

STEP 2 At the Numeric Keypad, enter the two-digit number for the desired Storage Location. The **LOCATE TIME** display shows the entered number, then immediately changes so as to show both the Storage Location number and the previously stored argument.

STEP 3 Within ten seconds, enter the new argument on the Numeric Keypad, then press STO .

STEP 4 If it is desired to retain the previously stored argument in the Storage Location, no action should be taken for STEP 3. In this event, the **LOCATE TIME** display reverts to its original indication after ten seconds, and the previously stored value is retained in the Storage Location.

4.6.3 Location 98 — BIT BUMP

BIT BUMP is a special operation that allows Synchronization Offsets to be set with an accuracy of 1/80th of a Frame. This facility is adjusted by means of the MVC control rather than by entry at the Numeric Keypad.

4.6.3.1 Adjustment Procedure

To adjust the BIT BUMP value, first press RCL and enter 9 8 on the Numeric Keypad. This recalls the contents of Storage Location 98 in the format:

Ss.Ff -Bb-

Where: S = Tens of seconds
s = seconds
F = Tens of frames
f = Frames
— = Dash
B = Tens of bits] (Modulo 80)
b = bits]
(preceded by a minus sign for negative values).

The seconds and frames in this display represent the seconds and frames portion of the Synchronization Offset, and any change made to this value results in a concomitant change in the contents of Storage Location 00.

NOTE: Within the machine, the Bit Offset resolution is considerably finer than 1/80th of a frame, and the displayed frame count is a rounded-off number.

To change the contents of the display, press MVC to the right for an increment or to the left for a decrement. Changes that overflow the modulo 80 bit count upward increment the frame count, and changes that overflow downward decrement the frame count. If it is desired to clear the sub-frame offsets, this can be accomplished quickly by pressing 0 on the Numeric Keypad.

Once the desired offset is displayed, press STO and enter 9 8 on the Numeric Keypad to store the new offset into Storage Location 98. It is important to note that, even where the BIT BUMP value remains unchanged, STO 9 8 must be entered to escape the display.

NOTE: All sub-frame offsets become cleared automatically when RESOLVE ON PLAY (paragraph 4.5.1) is actuated. This is a safety feature which ensures that the important Video to tape LTC framing relationship is preserved.

4.6.4 Location 99 — Offset Calculation

Offset Calculation is a special operation that allows the offset between the Master Time Code and the tape Time Code to be captured. This data can be displayed for identification and/or subsequent storage in any of those Storage Locations whose contents are time values.

4.6.4.1 Offset Capture and Display

To capture and display the offset, first press RCL , then enter 9 9 on the Numeric Keypad. The **LOCATE TIME** display now shows the offset between the Master and tape Time Codes.

4.6.4.2 Offset Capture, Display and Store

To capture and display the offset, and then store it into Location 00 (Synchronization Offset), all that is required is to capture, as described in paragraph 4.6.4.1, then press STO and enter 9 9 on the Numeric Keypad.

4.7 MACHINE OPERATIONS

4.7.1 Mounting the Reels

The machine can accomodate plastic or metal reels with diameters ranging from 3 inches to 12.5 inches. Depending upon the size of the reel flange, which varies between reels of different manufacture, some reels may require the use of rubber reel platter shims (supplied accessory), these being inserted between the reel and the reel platter to center the tape between the reel flanges.

Reels with diameters ranging from 3 inches to 7 inches are mounted directly on the reel transport spindle (see Figure 4-9), and the reel hubs are installed to secure the reel to the platter. For the larger 10.5-inch to 12.5-inch NAB type reels, the reel hubs are installed first, and the reels then are seated directly on the hubs.

4.7.2 Threading the Tape

Figure 4-10 illustrates the tape path through the transport. When correctly installed, the tape should ride smoothly across the various rollers, the headstack, and the flutter damping arm.

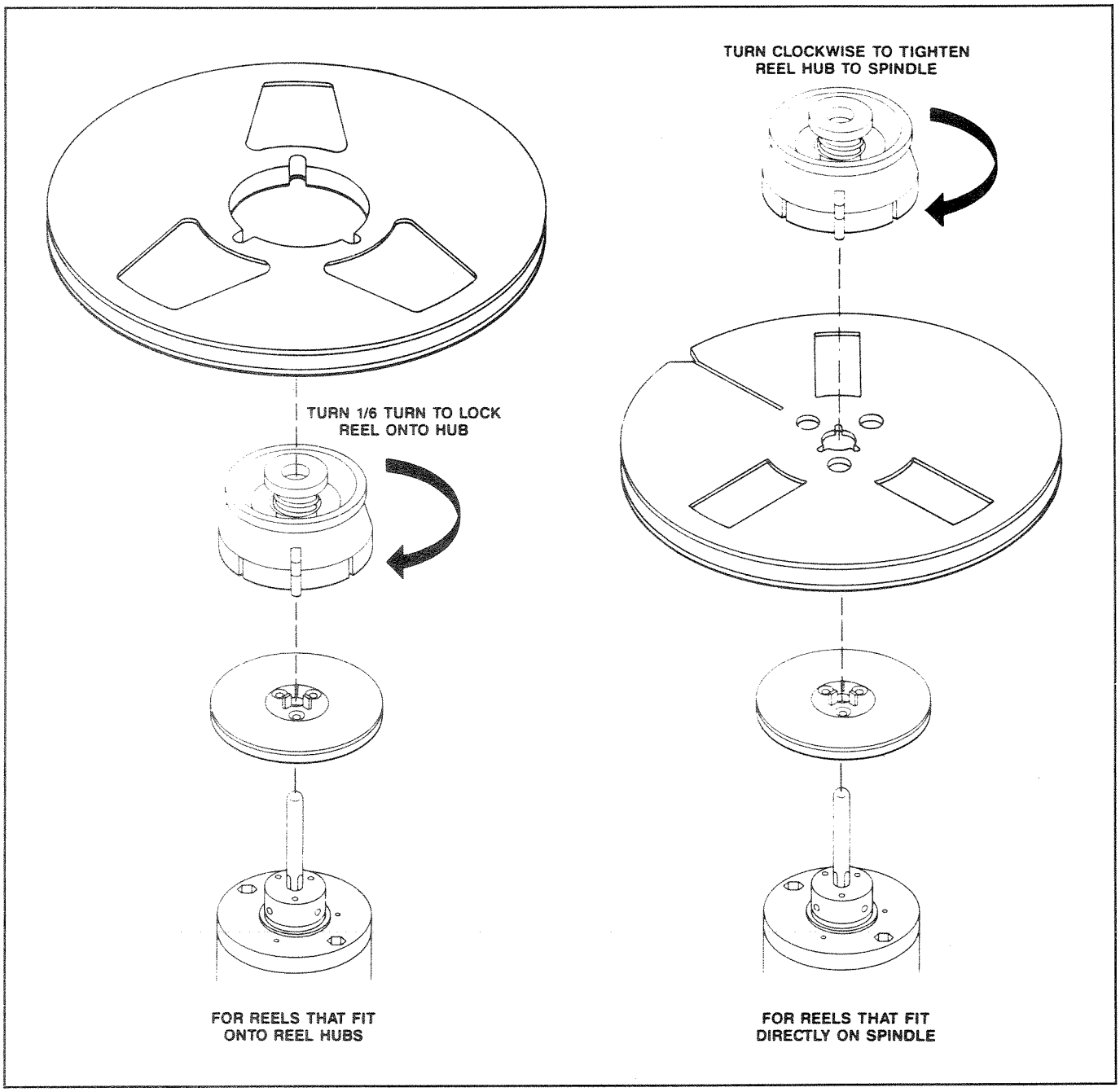

Figure 4-9. Mounting the Reels

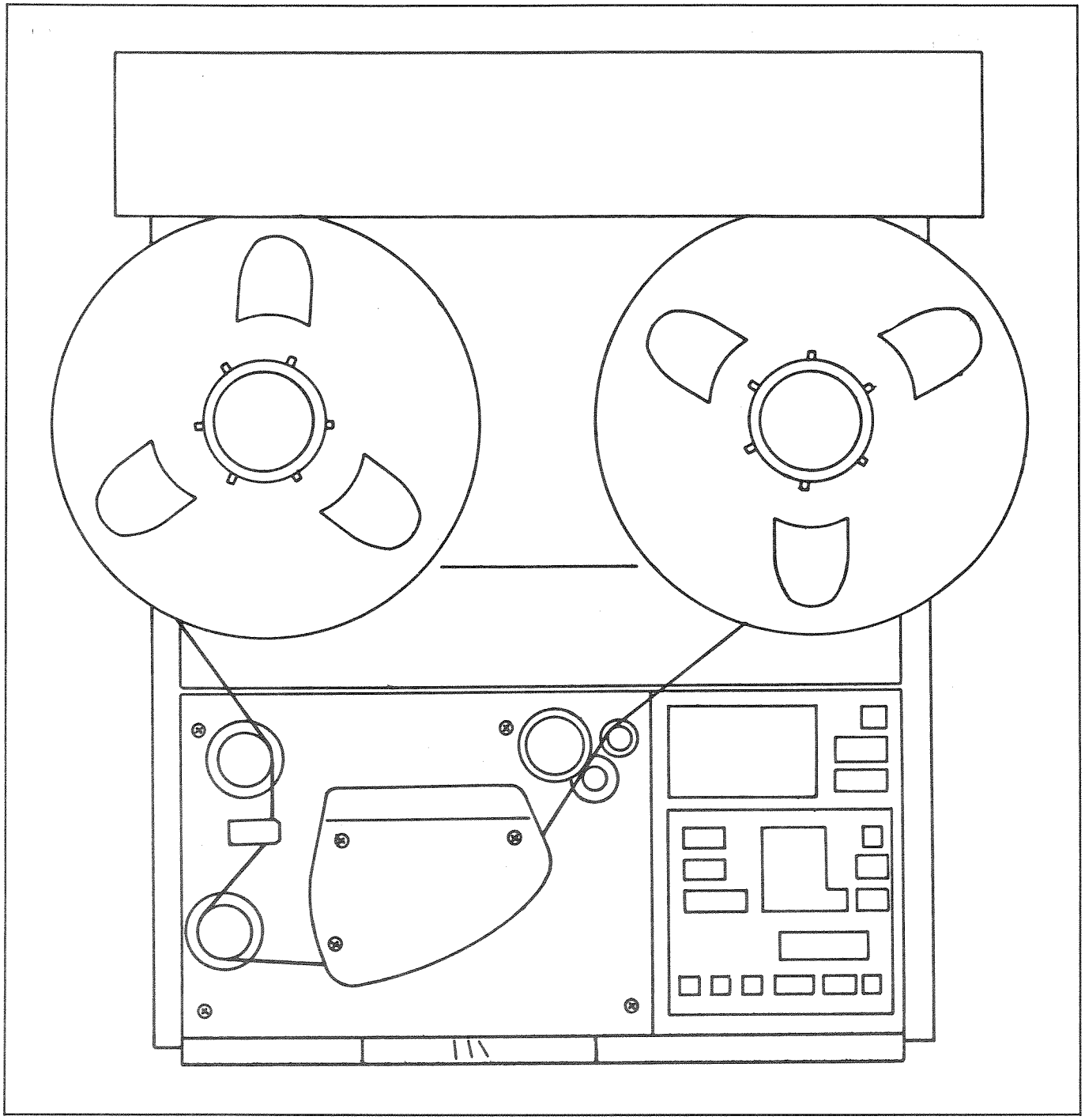

Figure 4-10. Tape Path

4.7.3 Transport Control

4.7.3.1 Fast Wind Modes

This paragraphs describes the modes in which the tape is moved from reel to reel at high speed. All of the mentioned controls and indicators are illustrated in Figure 4-1.

FAST FORWARD — To advance the tape to a forward position, press FF . This causes the tape to fast wind from the supply reel to the takeup reel.

REWIND — To move the tape in the reverse direction, press REW . This causes the tape to fast wind back from the takeup reel to the supply reel.

LOCATE — To wind to a specific position on the tape, enter the time for that position into the **LOCATE TIME** display via the Numeric Keypad, and then press LOCATE . This causes the tape to fast wind to the desired position. During the LOCATE operation, depending upon the direction of wind, either FF or REW becomes illuminated.

During any fast winding mode, the lifters automatically come forward to lift the tape off the heads, this being done to avoid subjecting the tape to unnecessary wear and tear. If so desired, the LIFTER key can be pressed during fast wind to allow the tape to ride across the heads.

Where it is desired to ensure that the tape be packed more evenly on the reel, SPOOL mode can be entered from any of the fast wind modes by simply touching the MVC control while the tape is winding.

4.7.3.2 MVC Operation

The MVC control can be used to shuttle the tape back and forth while the transport is in STOP mode. Tilting MVC to the left causes the tape to rewind, and tilting it to the right causes the tape to wind forward, the speed of the wind depending upon the distance through which the control is tilted. It should be noted that the lifters cannot be defeated while winding or rewinding in MVC mode.

4.7.4 PLAY

The various requirements of a PLAY operation are given in paragraphs 4.7.4.1 and 4.7.4.2. Unless otherwise stated, all of the mentioned controls and indicators are illustrated in Figures 4-1 and 4-7.

4.7.4.1 Initial Setup

STEP 1 Connect the inputs to the mixing console, audio amplifier, or other playback device to the **OUTPUT CH-1** and **OUTPUT CH-2** connectors on the rear panel of the machine.

STEP 2 Set the **POWER** switch to ON and set the audio channels for the desired playback source. This can be either the repro head (select REPRO on the **MONITOR** section) or the sync head (select SYNC on the **MONITOR** section). It should be noted that the repro head gives the better frequency response.

4.7.4.2 PLAY Operation

Before entering PLAY mode, the machine should be cued to the point where RECORD was started. Once the machine is cued, pressing PLAY on the Transport Control Panel initiates the playback, during which the PLAY key is illuminated.

If so desired, the playback level can be adjusted by selecting UNCAL on the **OUTPUT LEVEL** section of the Audio Channel Control Panel. In the UNCALIBRATED mode, the rotary control can be used to set the desired playback volume.

4.7.5 Recording

The various requirements of a RECORD operation are given in paragraphs 4.7.5.1 through 4.7.5.3. All of the mentioned controls and indicators are illustrated in Figures 4-1 and 4-7.

4.7.5.1 Initial Setup

STEP 1 Connect the sources of the material to be recorded to the **INPUT CH-1** and **INPUT CH-2** connectors on the rear panel of the machine.

STEP 2 Set the **POWER** switch to ON and verify that no error message is shown on the **STATUS** Display on the Alignment Control Panel.

STEP 3 Select READY on the **RECORD** section of the Audio Channel Control Panel(s) to set the desired channel(s) into RECORD READY. Verify that the appropriate READY keys become illuminated.

STEP 4 Select INPUT on the **MONITOR** section of the appropriate Audio Channel Control Panel(s).

STEP 5 While watching the **VU** meter, play a section of the material to be recorded and adjust the input level so that the audio peaks cause meter deflections of about 0 VU. The input peaks should never be allowed to cause meter deflections greater than +3 dB. (It is recommended that this adjustment be done using that part of the audio input that has the greatest volume.)

STEP 6 Cue the machine to the desired tape starting position.

4.7.5.2 RECORD Operation

At the Transport Control Panel, press PLAY and RECORD simultaneously. This causes the record-readied channels to enter RECORD mode, as indicated by their **BIAS** and **ERASE** indicators becoming illuminated, together with the PLAY and RECORD keys.

4.7.5.3 Monitoring During Record

During the RECORD operation the user has the option of monitoring either the input material or the repro signal that is being recorded.

To monitor the input signal, either INPUT or SYNC can be selected on the **MONITOR** section of the Audio Channel Control Panel. To monitor the repro signal,

the REPRO key should be selected. The selected function is indicated by the illumination of the appropriate key.

4.7.6 Other Operations

4.7.6.1 SPOT ERASE

The SPOT ERASE operation provides a method of erasing a section of tape with the transport under manual control. Use the following procedure:

STEP 1 Set the **POWER** switch to **ON**.

STEP 2 Select READY on the Audio Channel Control Panel for the track to be erased.

STEP 3 At the Numeric Keypad, enter the time for the tape position where the erasure is to be made into the **LOCATE TIME** display, and then press LOCATE on the Transport Control Panel to wind the tape to that position.

STEP 4 Press SPOT on the Transport Control Panel to arm the SPOT ERASE mode. Verify that the SPOT key is flashing.

STEP 5 Press RECORD on the Transport Control Panel. Verify that the SPOT key becomes solidly illuminated, together with the **ERASE** indicator for the selected channel.

STEP 6 Upon completion of STEP 5, the tape tension is released, and the reels can be turned by hand to move the desired section of the tape over the erase head.

STEP 7 When the erasure is completed, press STOP on the Transport Control Panel.

4.7.6.2 REPEAT

The REPEAT function is used to create a "looping mode" in which the same section of the tape is played back repeatedly. The tape section to be repeated is programmed by entering START and STOP times into Storage Locations 28 and 29, respectively. Note that the STOP time must be later than the START time.

The procedure used to enter REPEAT mode is detailed below.

STEP 1 Set up the machine for PLAY mode.

STEP 2 Enter the START time into the **LOCATE TIME** Display.

STEP 3 Press STO 2 8 on the numeric keypad to enter the START time into memory.

STEP 4 Enter the STOP time into the **LOCATE TIME** Display.

STEP 5 Press STO 2 9 on the numeric keypad to enter the STOP time into memory.

STEP 6 Press REPEAT to enter the mode.

STEP 7 Upon completion of the REPEAT operation, press STOP to escape the mode.

Where the START and STOP locations are not known in terms of their Time Codes, the following procedure can be used:

STEP 1 Set up the machine for PLAY mode.

STEP 2 Cue the tape to the desired START point.

STEP 3 Press the DOWN ARROW to transfer **TAPE TIME** into **LOCATE TIME**.

STEP 4 Press STO 2 8 on the numeric keypad to enter the START time into memory.

STEP 5 Cue the tape to the desired STOP point.

STEP 6 Press the DOWN ARROW to transfer **TAPE TIME** into **LOCATE TIME**.

STEP 7 Press STO 2 9 on the numeric keypad to enter the STOP time into memory.

STEP 8 Press REPEAT to enter the mode.

STEP 9 Upon completion of the REPEAT operation, press STOP to escape the mode.

SECTION 5
REPLACEMENT PARTS

5.1 INTRODUCTION

This section provides the additional exploded views and parts lists relating to the **APR-5003V**. For those parts lists and drawing relevant to the standard **APR-5000** Series machines, refer to the **APR-5000** Series Operation and Maintenance Manual.

5.2 PARTS INFORMATION

5.2.1 General Information

Because of ongoing parts improvement or standardization programs, replacement parts supplied from SONY Parts Center may differ in physical configuration from the parts being replaced. The spare parts listed in this Supplement are SONY standardized genuine parts, and, as such, have been authorized as replacements. For further information regarding parts changes, refer to the appropriate SONY Service Bulletins and/or Manual Supplements.

WARNING

THOSE ITEMS IDENTIFIED ON DRAWINGS OR PARTS LISTS WITH THE ⚠ MARK ARE CRITICAL TO SAFE OPERATION, AND MUST BE REPLACED ONLY WITH THOSE AUTHORIZED SONY PARTS WHOSE PART NUMBERS ARE GIVEN IN THIS SUPPLEMENT, OR IN SUCH OTHER MANUAL SUPPLEMENTS OR SERVICE BULLETINS AS MAY BE APPLICABLE.

5.2.2 Service Codes

Parts identified with an "S" in the Service Code column of the parts list are normally stocked for replacement purposes. An "O" Service Code indicates that the part is not normally required for routine service replacement. Orders for such parts will be processed, but will usually required a longer lead time.

Items that are not listed, or are listed without part number or description are not stocked for one of the following reasons:

a. They are seldom required for routine service

b. They are part of some higher assembly

c. They are common hardware items

5.2.3 Replacement Springs

The (xxT) designation given after the a spring description indicates the number of turns required for normal useage. For example, the description:

Spring, tension, (12T)

indicates that the spring must be cut at its 12th turn before being installed.

PWA LOCATIONS CHART

1. ACM Board
2. MSB Board
3. TCM Board
4. RMD Board
5. RTS-1 Board
6. PDB Board
7. CPU Board
8. DSP Board
9. KBD Board
10. RG-1 Board
11. CSL Board
12. ALN Board
13. RG-2 Board
14. TTS Board
15. AHB Board
16. HES Board
17. MST Board
18. CNL Board
19. CNL Board
20. TCC Board
21. ADM Board
22. FEX Board
23. RTS-1 Board
24. LNT Board
25. CNX Board
26. TIB Board
27. CTM Board
28. CTM Board
29. VVT Board

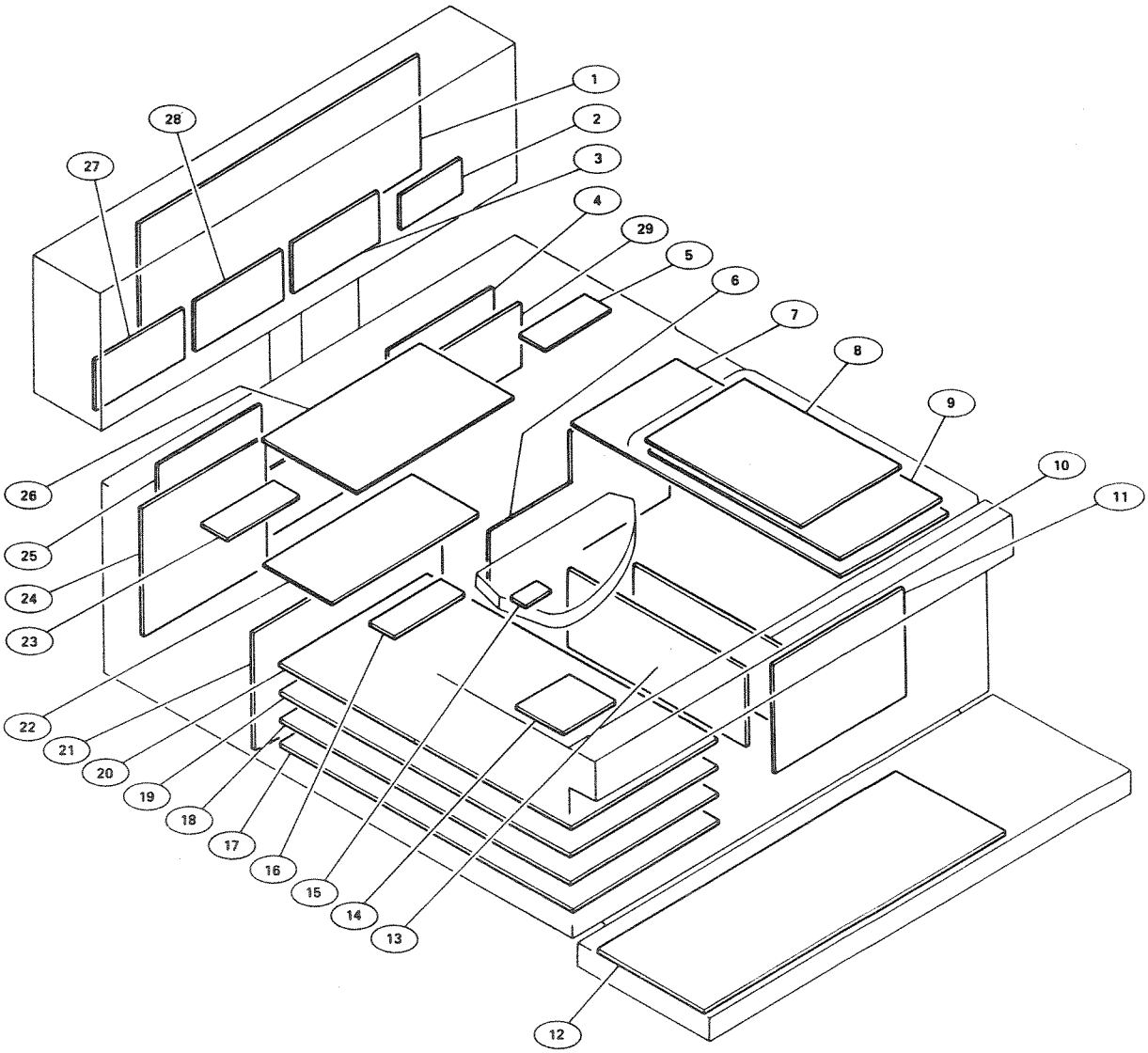

Figure 5-1. Printed Wiring Assembly Locations

CHASSIS ASSEMBLY PARTS LIST

Callout Reference	SONY Part No.	Description	Service Code
1001	T-9481-802-X	Printed Wiring Assembly, CPU	O
1002	T-9481-032-X	Printed Wiring Assembly, TIB	O
1003	T-9480-937-X	Printed Wiring Assembly, FEX	O
1004	T-9480-186-X	Printed Wiring Assembly, LNT	O
1005	T-9480-929-X	Printed Wiring Assembly, ACM	O
1006	T-9482-436-1	Printed Wiring Assembly, VVT	O
1007	X-3711-013-2	Assembly, Enclosure	O
1008	X-3711-026-1	Assembly, Transformer Shield	O
1009	1-937-530-11	Harness, Bias/ER/Rec Sub	O
1010	1-937-531-11	Harness, Sync Sub	O
1011	1-937-533-11	Harness, Relay Control	O
1012	1-937-535-11	Harness, CPU-LNT	O
1013	1-937-536-11	Harness, CPU-TIB	O
1014	3-703-150-11	Clamp	O
1015	3-711-043-02	Support, Neck	O
1016	3-711-044-02	Neck, Monitor Housing	O
1017	3-711-045-01	Weldment, Yoke	O
1018	3-711-046-03	Skirt, Monitor Housing	O
1019	3-711-047-01	Cover, Rear	O
1020	3-711-048-01	Shaft	O
1021	3-711-050-01	Standoff, Top Cover	O
1022	3-711-106-01	Standoff, Head Block	O
1023	3-711-107-01	Standoff, Connector	O
1024	3-711-128-02	Standoff, 5mm	O
1025	3-711-135-02	Panel, Rear	O
1026	3-711-161-03	Cover, Shield, FEX	O
1027	3-711-241-01	Insulator, Amplifier	O
1028	3-711-253-01	Cover, Neck Support	O
1029	3-711-283-12	Hinge, B-1100 Series	O
1030	3-880-616-00	Boss	O

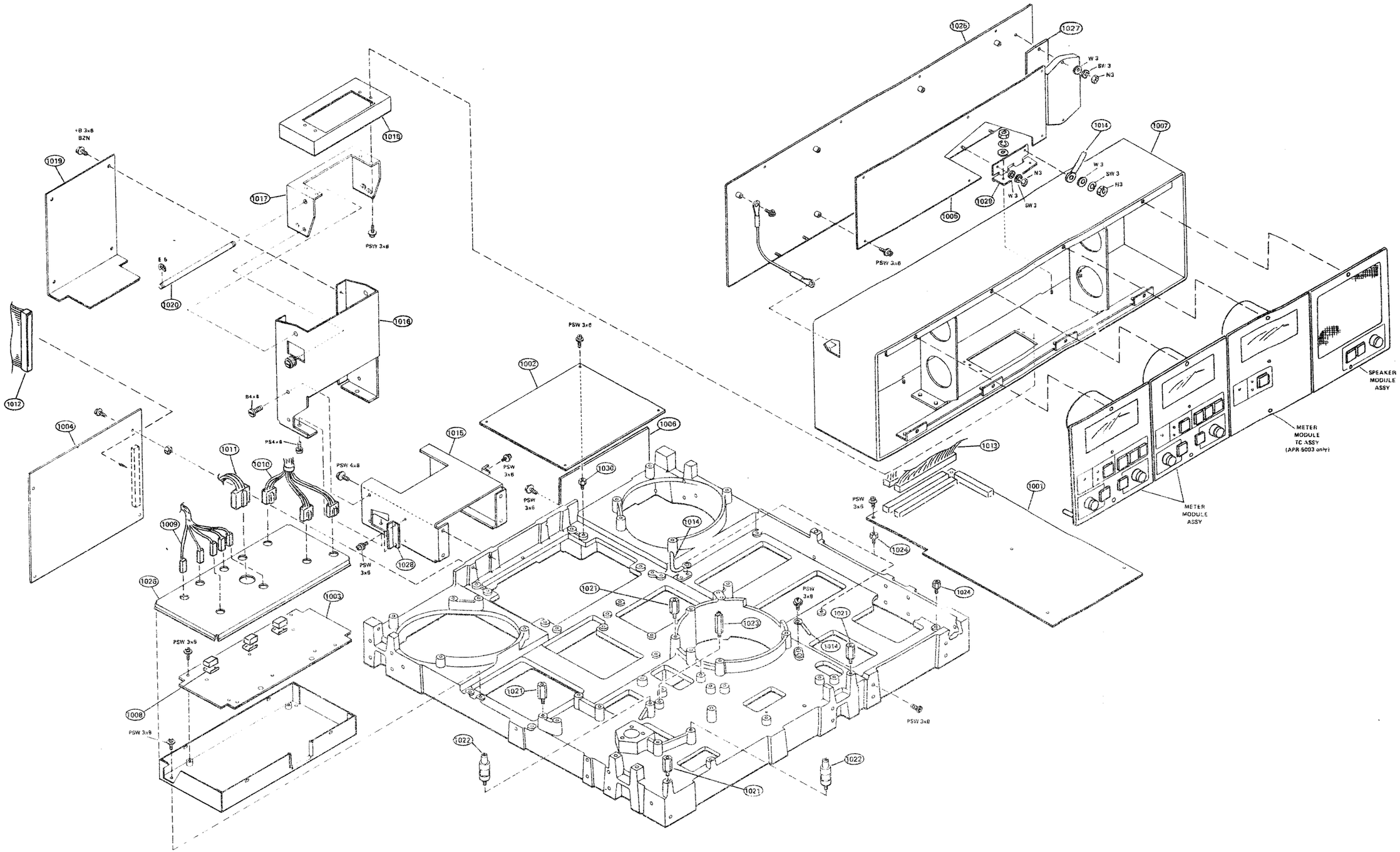

Figure 5-2. Chassis Assembly

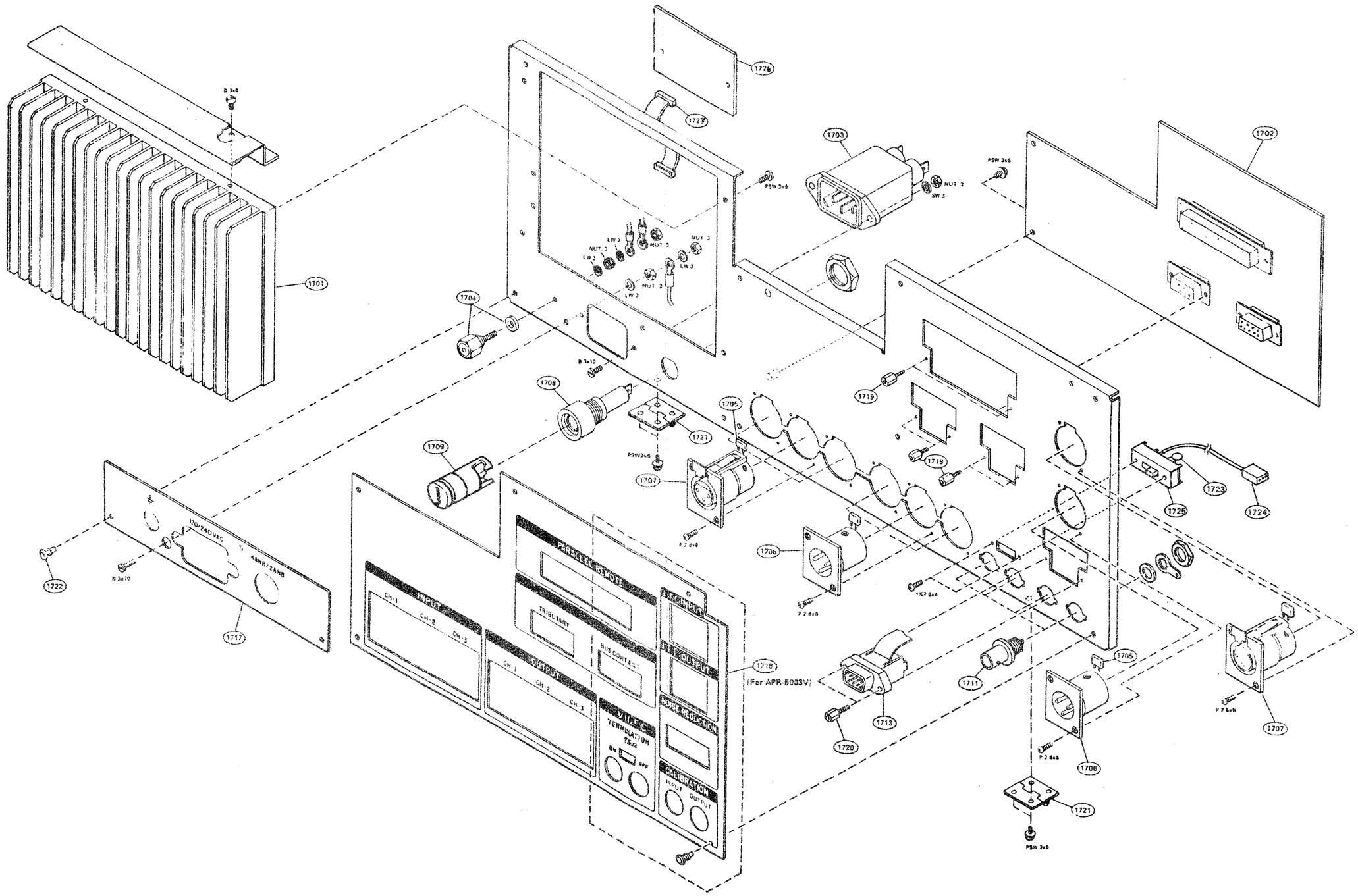

Figure 5-3. Rear Panel Assembly
(Sheet 1 of 2)

REAR PANEL ASSEMBLY PARTS LIST

Callout Reference	SONY Part No.	Description	Service Code
1701	T-9480-961-2	Printed Wiring Assembly, RMD	O
1702	T-9480-969-3	Printed Wiring Assembly, CNX	O
1703	T-9412-524-1	Connector, Power Input	S
1704	X-4801-204-0	Assembly, Terminal	O
1705	1-161-051-00	Cap., Ceramic, 0.01uF/50V	S
1706	1-509-176-51	Connector, Plug, 3-pin, XLR-3-32-F77	S
1707	1-509-184-51	Connector, Recept., 3-pin, XLR-3-31-F77	S
1708 ⚠	T-9410-905-1	Holder, Fuse	S
1709 ⚠	T-9413-261-1	Fuse, 3AG, 4 Amp.	S
1709 ⚠	T-9413-262-1	Fuse, 3AG, 2 Amp.	S
1710	1-534-827-00	Cord, Power	S
1711	1-561-781-21	Connector, Receptacle, BNC	S
1712	1-937-546-12	Harness, Rear Panel Sub-assembly	O
1713	1-937-547-11	Harness, Noise Reduction	O
1714	3-157-917-00	Support, PWA	O
1715	3-577-229-00	Insulator, TO-126	O
1716	3-673-624-02	Sheet, Insulating, TR	O
1717	3-711-097-02	Panel, Silk Screen	O
1718	3-711-351-01	Panel, Silk Screen	O
1719	3-711-228-01	Standoff	O
1720	3-711-228-11	Standoff	O
1721	3-711-283-02	Hinge	O
1722	4-812-134-11	Rivet, Nylon, 3.5	S
1723	1-214-105-00	Resistor, 75 Ohms, 1/4W, 1%	S
1724	1-509-984-00	Housing, IL Connector, 3-pin	O
1724	1-560-298-00	Terminal, Solderless	O
1725	1-516-783-99	Switch, Slide	S
1726	T-9482-436-1	Printed Wiring Assembly, VVT	O
1727	T-9482-689-1	Harness, VVT to CNX	O

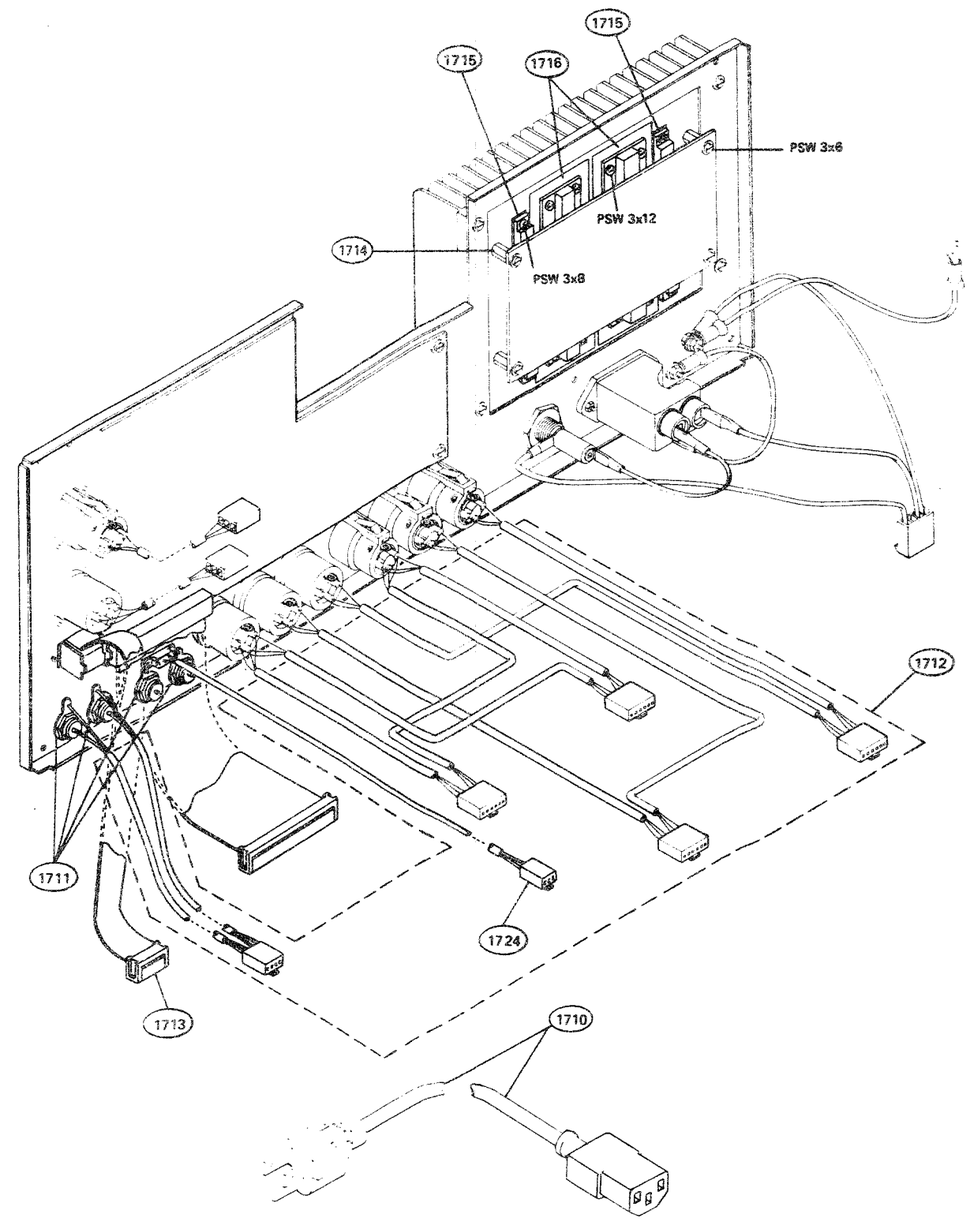

Figure 5-3. Rear Panel Assembly (Sheet 2 of 2)

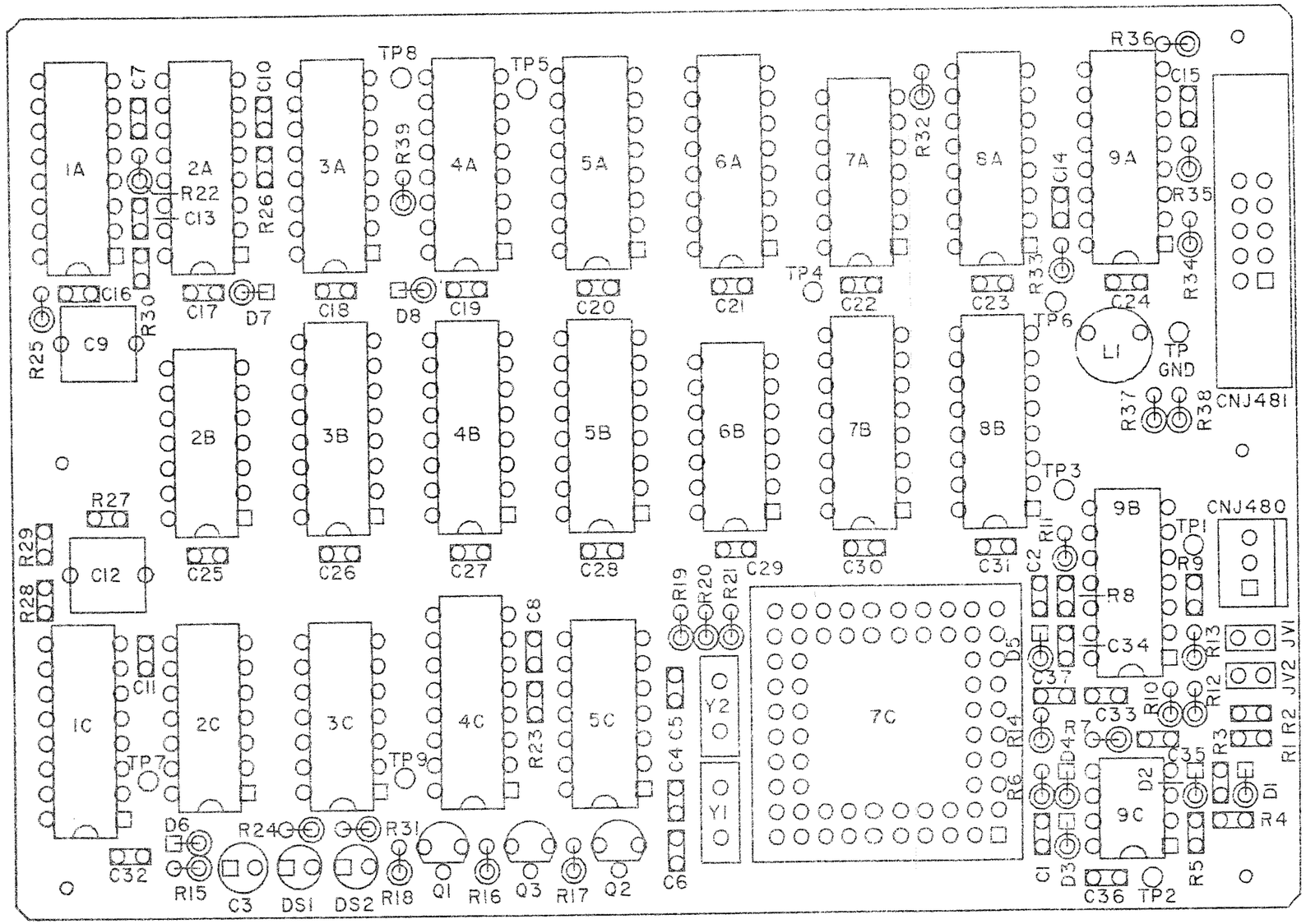

Figure 5-4. Video/VITC Translator Board (VVT) Component Layout

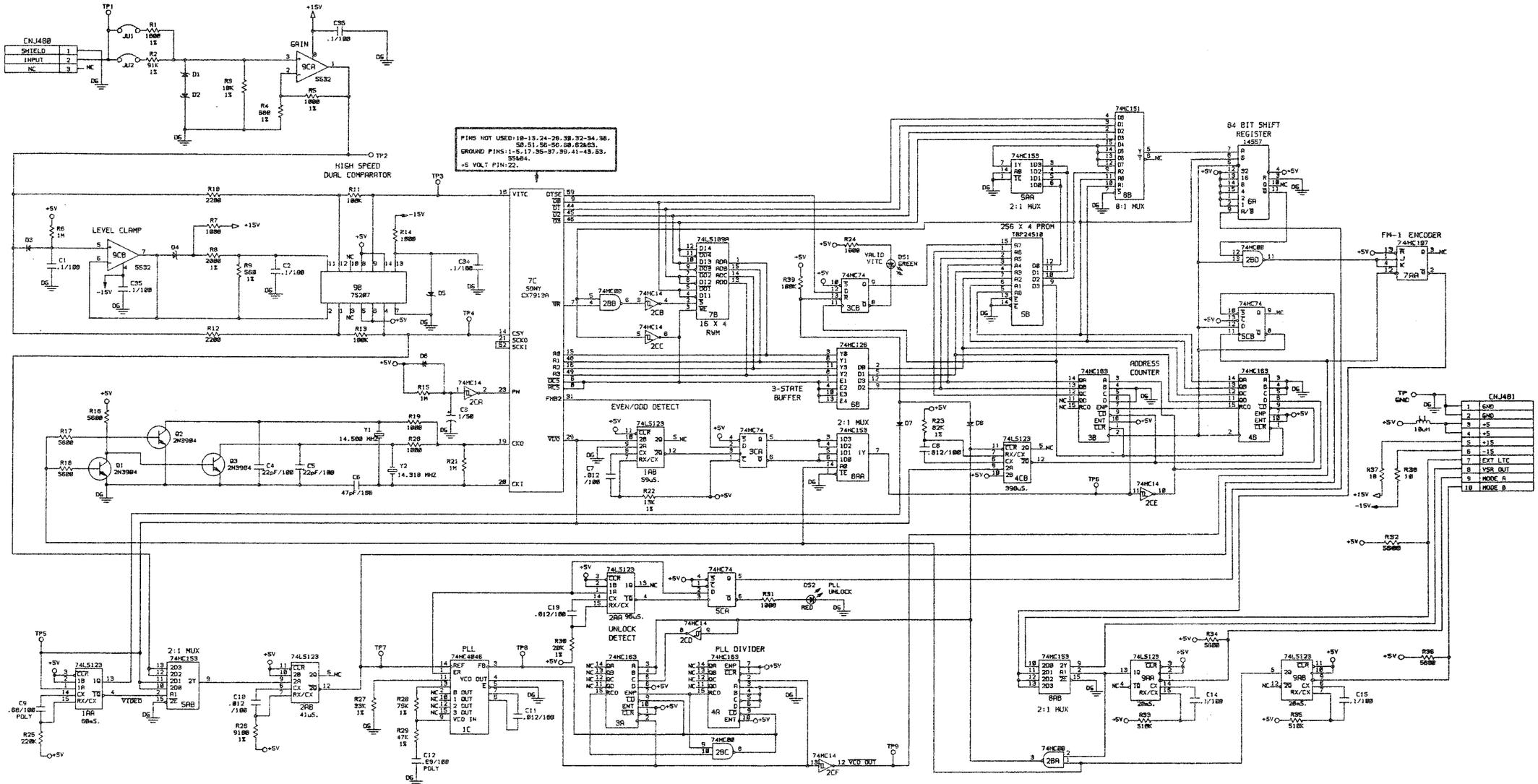

DECOUPLING CAPS		PWR PINS	
IC	+5V	+5V	GND
1A	C16..1/100	16	8
2A	C17..1/100	16	8
3A	C18..1/100	16	8
4A	C19..1/100	16	8
5A	C20..1/100	16	8
6A	C21..1/100	16	8
7A	C22..1/100	14	7
8A	C23..1/100	16	8
9A	C24..1/100	16	8
2B	C25..1/100	14	7
3B	C26..1/100	16	8
4B	C27..1/100	16	8
5B	C28..1/100	16	8
6B	C29..1/100	14	7
7B	C30..1/100	16	8

DECOUPLING CAPS		PWR PINS	
IC	+5V	+5V	GND
8B	C31..1/100	16	8
9B	C32..1/100	14	7
1C	C33..1/100	16	8
2C	———	14	7
3C	———	14	7
4C	———	16	8
5C	———	14	7
7C	C37..1/100	47.61	48,54
9C	———	———	———

TEST POINTS	
1	INPUT SIGNAL
2	INPUT X GAIN/LOSS
3	LOGIC LEVEL VITC
4	LOGIC LEVEL SYNC
5	VERTICAL DETECT
6	FRAME DETECT
7	PLL REFERENCE
8	PLL FEEDBACK
9	VCO OUTPUT

NOTES:
1)UNLESS OTHERWISE SPECIFIED:
ALL RESISTORS ARE IN OHMS, 5%, 1/8W.
ALL CAPACITORS ARE IN MICROFARADS/VOLTS MLC TYPE
ALL DIODES ARE 1N914.
ALL ZENERS ARE 1N5231B.
ALL 1% RESISTORS ARE RADIAL LEADFORM,1/8W,METAL.

Figure 5-5. Video/VITC Translator Board (VVT) Schematic

VIDEO/VITC TRANSLATOR BOARD (VVT) ELECTRICAL PARTS LIST

Reference Designation	SONY Part No.	Description	Service Code
Assembly	T-9482-436-1	Printed Wiring Assembly, VVT	O
C1 & C2	1-161-894-21	Cap., Ceramic, 0.1uF/50V	S
C3	1-123-611-00	Cap., Elect., 1.0uF/50V, 20%	S
C4 & C5	1-162-671-11	Cap., Ceramic, 22pF/50V	S
C6	1-162-745-11	Cap., Ceramic, 47pF/50V	S
C7 & C8	1-162-795-21	Cap., Ceramic, 0.012uF/50V	S
C9	1-136-175-00	Cap., Poly Film, 0.68uF/50V	S
C10 & C11	1-162-795-21	Cap., Ceramic, 0.012uF/50V	S
C12	1-136-175-00	Cap., Poly Film, 0.68uF/50V	S
C13	1-162-795-21	Cap., Ceramic, 0.01uF/50V	S
C14 thru C47	1-161-894-21	Cap., Ceramic, 0.1uF/50V	S
CNJ480	1-560-300-11	Header Post, 3-pin	O
CNJ481	1-564-693-21	Connector, Ribbon Cable, 10-pin	O
D1 & D2	8-719-100-30	Diode, Zener, 5.1V, RD5.1EB2	S
D3	8-719-991-40	Diode, 1N914	S
D4 & D5	8-719-100-30	Diode, Zener, 5.1V, RD5.1EB2	S
D6 thru D8	8-719-991-40	Diode, 1N914	S
DS1	8-719-812-43	Indicator, LED, Green, TLG124A	S
DS2	8-719-812-41	Indicator, LED, Red, TLR124	S
IC1A & IC2A	8-759-202-86	Integrated Cct., TC74HC123P	S
IC3A & IC4A	8-759-202-32	Integrated Cct., TC74HC163P	S
IC5A	8-759-202-93	Integrated Cct., TC74HC153P	S
IC6A	8-759-045-57	Integrated Cct., MC14557BCP	S
IC7A	8-759-202-83	Integrated Cct., TC74HC107P	S
IC8A	8-759-202-93	Integrated Cct., TC74HC153P	S
IC9A	8-759-202-86	Integrated Cct., TC74HC123P	S
IC2B	8-759-202-11	Integrated Cct., TC74HC00P	S
IC3B & IC4B	8-759-202-32	Integrated Cct., TC74HC163P	S
IC5B	T-9413-794-1	PROM, 256x4, TBP24S10, VVT	S
IC6B	8-759-004-64	Integrated Cct., MC74HC126N	S
IC7B	8-759-901-89	Integrated Cct., SN74LS189AN	S
IC8B	8-759-202-92	Integrated Cct., TC74HC151P	S
IC9B	8-759-952-07	Integrated Cct., SN75207BN	S
IC1C	8-759-007-18	Integrated Cct., MC74HC4046N	S
IC2C	8-759-202-17	Integrated Cct., TC74HC14P	S
IC3C	8-759-000-99	Integrated Cct., MC74HC74N	S
IC4C	8-759-202-86	Integrated Cct., TC74HC123P	S
IC5C	8-759-000-99	Integrated Cct., MC74HC74N	S
IC7C	8-759-910-76	Integrated Cct.,SONY CX7913A	S
IC9C	8-759-900-72	Integrated Cct., NE5532P	S
JU1 & JU2	1-566-385-11	Connector, Jumper, 2-pin	S
L1	1-421-329-00	Inductor, Choke, 10uH	S
Q1 thru Q3	8-719-139-04	Transistor, 2N3904	S
R1	1-214-557-00	Resistor, 1.00K, 1%, 1/8W	S
R2	1-215-829-00	Resistor, 91.0K, 1%, 1/8W	S
R3	1-214-581-00	Resistor, 10.0K, 1%, 1/8W	S
R4	1-214-553-00	Resistor, 680 Ohms, 1%, 1/8W	S
R5	1-214-557-00	Resistor, 1.00K, 1%, 1/8W	S
R6	1-247-903-00	Resistor, 1 Meg, 5%, 1/4W	S
R7	1-249-417-11	Resistor, 1K, 5%, 1/4W	S
R8	1-214-564-00	Resistor, 2.00K, 1%, 1/8W	S
R9	1-214-551-00	Resistor, 560 Ohms, 1%, 1/8W	S

VIDEO/VITC TRANSLATOR BOARD (VVT) ELECTRICAL PARTS LIST (continued)

Reference Designation	SONY Part No.	Description	Service Code
R10	1-249-421-11	Resistor, 22K, 5%, 1/4W	S
R11	1-249-441-11	Resistor, 100K, 5%, 1/4W	S
R12	1-249-421-11	Resistor, 22K, 5%, 1/4W	S
R13	1-249-441-11	Resistor, 100K, 5%, 1/4W	S
R14	1-249-417-11	Resistor, 1K, 5%, 1/4W	S
R15	1-247-903-00	Resistor, 1 Meg, 5%, 1/4W	S
R16 thru R18	1-249-426-11	Resistor, 5.6K, 5%, 1/4W	S
R19 & R20	1-249-417-11	Resistor, 1K, 5%, 1/4W	S
R21	1-247-903-00	Resistor, 1 Meg, 5%, 1/4W	S
R22	1-214-584-00	Resistor, 13.0K, 1%, 1/8W	S
R23	1-215-828-11	Resistor, 82.0K, 1%, 1/8W	S
R24	1-249-417-11	Resistor, 1K, 5%, 1/4W	S
R25	1-247-887-00	Resistor, 220K, 5%, 1/4W	S
R26	1-214-580-00	Resistor, 9.10K, 1%, 1/8W	S
R27	1-214-593-00	Resistor, 33.0K, 1%, 1/8W	S
R28	1-215-827-11	Resistor, 75.0K, 1%, 1/8W	S
R29	1-215-822-11	Resistor, 47.0K, 1%, 1/8W	S
R30	1-214-588-00	Resistor, 20.0K, 1%, 1/8W	S
R31	1-249-417-11	Resistor, 1K, 5%, 1/4W	S
R32	1-249-426-11	Resistor, 5.6K, 5%, 1/4W	S
R33	1-247-896-11	Resistor, 510K, 5%, 1/4W	S
R34	1-249-426-11	Resistor, 5.6K, 5%, 1/4W	S
R35	1-247-896-11	Resistor, 510K, 5%, 1/4W	S
R36	1-249-426-11	Resistor, 5.6K, 5%, 1/4W	S
R37 & R38	1-249-393-11	Resistor, 10 Ohms, 5%, 1/4W	S
R39	1-249-441-11	Resistor, 100K, 5%, 1/4W	S
Y1	1-527-977-00	Resonator, Xtal, 14.318 MHz	S
Y2	1-527-227-00	Resonator, Xtal, 14.500 MHz	S

APPLICATION NOTES

NOTE 1

SERIAL CONTROL WITH SONY BVE-900 and BVE-9000 EDITORS

GENERAL COMMENTS

The general behavior of the **APR-5003V** as a source machine is similar enough to that of a VTR as to be largely transparent to the operator. The machine's handling of time code, manual transport controls, and source selection in an edit appears to be virtually the same as normal VTR operation, but, because of limitations in editor architecture, certain edit types may require Mixer Setup changes.

Operation of the ATR with the editor does not utilize the ATR's CHASE, or other higher order features such as PREVIEW, EDIT or REVIEW. The editor simply instructs the ATR to shuttle and stop at specific points. VARIABLE SPEED PLAY commands provide the means to position the ATR to be synchronous before the IN POINT is reached. Once the correct synchronous operation is attained, the ATR is commanded to RESOLVE to the external video reference. The editor is the sole controlling entity in the process of the edit sequence.

CONNECTIONS AND SETUP

For proper serial control with SONY **BVE-900** and **BVE-9000** Editors, the following conditions must be met.

1. The Editor must be connected to the **APR-5003V** via the **TRIBUTARY** serial port on the rear panel of the machine. (See Figure 1.)

2. The house video reference must be connected to either one of the **VIDEO** ports on the rear panel, and the **TERMINATION** switch must be set as follows:

   a. Where the **APR-5003V** is the video reference terminating link, the switch must be set to **ON**.

   b. Where the video reference is daisy-chained to another device, the switch must be set to **OFF**.

3. Storage Location 37 must be set to 1, thereby selecting video as the resolving reference.

4. The correct tape speed must be selected relative to the Time Code on tape, and a consistent Time Code type must be used throughout the system.

5. The Setup Menus for VTR BLOCK #1 and VTR BLOCK #2 must be in accordance with the data given in the **Recommended Menu Setup for ATR usage as Player** section given later in this document.

It should be noted that, at power-up, the Editor disables the machine's local control with its initial commands. This can be re-established by pressing the **LOCAL** key on the Transport Control Panel. Furthermore, the serial control capability can be disengaged by deselecting the **NETWORK** key on the same panel.

METHODS OF USE

Stand Alone, Audio Only, Source Edits

In this application, the ATR operates as a stand-alone audio source, and programming an edit does not differ from normal VTR operation. Specifically, an audio only Cut or Dissolve from the ATR is programmed in the same manner as it would be for a video source. The ATR is not linked with any other Player. Time Code match frames are listed in the same manner as with VTR applications. Edit data for the ATR is preserved in the EDL.

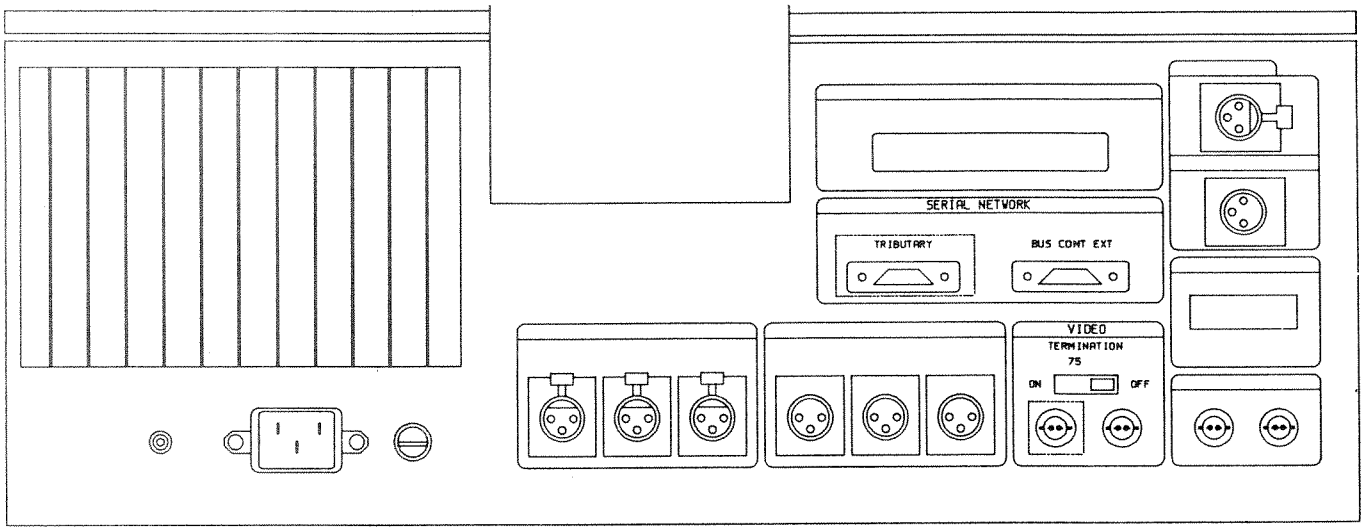

Figure 1. Rear Panel Connectors

Effect Type (Manual)

A Manual effect type allows the operator to choose a background and a foreground source for the edit. Selecting the ATR as the background source and a VTR as the foreground source allows the user to record Video from the VTR while recording audio from the ATR. Edit data relative to each source is preserved in the EDL. This application is most suitable for matching "sync-sound" with previously recorded video material.

CAUTION: Audio from the Foreground (VTR) source also is present in this edit unless the Fader associated with this player is muted or faded down.

ATR as Audio Source in a Cut with Video from another Player

This is an alternate method to the Effect Type (Manual) for combining audio from the ATR with Video from a player ATR. This method requires the manual re-assignment of the Mixer cross-points in the **BVE-900** Setup menu, as follows:

Mixer Block Reassignment

The Mixer Block Setup identifies for the editor the interconnections between mixer inputs and player outputs, i.e. which input channels of the mixer are connected with which output signals of the players. In this application, the user will simply exchange the identities of the audio and video sources so that the editor controls the ATR Fader as if it were the audio from the designated Video source.

Depending upon the mixer and its configuration, each cross-point assignment represents either two Mono Faders or one Stereo Line Input Fader. The SONY **MXP-29** will always provide two Mono channels for each source. The SONY **MXP-2000** can be configured either for dual Mono Fader operation, or can be configured with a single Stereo Line Input channel for each player.

EXAMPLE:

Initial Assignment:

P1 is designated Video Source Byte #2 assigned "01" (hex)

P3 is selected Audio Source (ATR) Byte #4 assigned "03" (hex)

Assignment Exchanged:

P1 is designated Video Source Byte #2 assigned "03" (hex)

P3 is selected Audio Source (ATR) Byte #4 assigned "01" (hex)

In this example, P1 is designated as the source of the edit. P3 should be selected with an asterisk "*" to assign the tandem roll of the ATR with P1. The ATR's Fader should be set to the desired level. The P1 VTR Fader position will have no effect on the audio edit. The P3 (ATR) Fader will be controlled by the editor as if it were the P1 (VTR) Fader.

It is very important to realize that no indication will appear in the EDL to identify P3 as the audio source in this edit.

ATR as Audio Source in a Dissolve or Wipe

The following examples illustrate situations in which one VTR's (P1) sync-sound is located on an ATR (P3).

Two Event Method:

The first event is programmed as a video only transition effect between P1 and P2. This preserves the video edit data in the EDL. The edit data specific to this event needs to be manually brought forward for use in the second event. The second event is programmed as an audio only transition effect between the **P3 (ATR)** and P2. This would register the sync-sound audio edit data in the EDL, thus providing sufficient data for the operator to re-create this edit sequence. The Mixer cross-points need not be reassigned when using this technique.

Single Event Methods:

General Notes

The Single event techniques identified below require that Mixer cross-points be reassigned. Please refer to the section above on "Mixer Block reassignment".

It also is helpful to remember that, in any effect, by selecting the ATR (P3) with an asterisk "*", the ATR is thus selected to perform a tandem roll with the **first** source in the edit process.

Match Frame; ATR in Tandem roll with "From" or "To" Machine

In this example, the P1 VTR is the video source whose sync-sound is located on the P3 ATR. A match frame transition effect from P1 to P2 or from P2 to P1 would be programmed in the customary manner, with the additional requirement that a tandem roll with the ATR be invoked by means of the asterisk "*" selection.

It is important to ensure that P1's mixer block assignment is exchanged with that of the P3 ATR. After the edit is complete, the assignment may be returned to its original settings.

As in any edit where the mixer block is reassigned, this setup information will not appear in the EDL, neither will P3's participation in this edit be preserved.

Delayed Transition; ATR in tandem with "From" Machine

In this example, the P1 VTR is the video source whose sync-sound is located on the P3 ATR. A delayed transition effect from P1 to P2 would be programmed in the customary manner, with the additional requirement that a tandem roll with the ATR be invoked by means of the asterisk "*" selection.

It is important to ensure that P1's mixer block assignment is exchanged with that of the P3 ATR.

After the edit is complete, the assignment may be returned to its original settings.

As in any edit where the mixer block is reassigned, this setup information will not appear in the EDL, neither will P3's participation in this edit be preserved.

Delayed Transition; ATR in tandem with "To" Machine

In this example, the P1 VTR is the video source whose sync-sound is located on the P3 ATR. A delayed transition effect from **P2** to **P1** would be programmed in the customary manner, with two additional requirements.

First, that a tandem roll with the ATR be invoked by means of the asterisk "*" selection.

Second, that the duration of the P2 edit ("From machine") be subtracted from the P3 (ATR) IN POINT. Remember, by selecting the ATR (P3) with an asterisk "*", the ATR is selected to perform a tandem roll with the **first** source in the edit process.

Again, it is important to ensure that the P1 Mixer Block assignment is exchanged with that of the P3 ATR. After the edit, the assignment may be returned to its original settings.

As in any edit where the mixer block is reassigned, this setup information will not appear in the EDL, neither will P3's participation in this edit be preserved.

Other restrictions to the use of the APR-5003V as a Player

The **APR-5003V** will not perform a synchronous DMC edit. The APR cannot provide synchronous and frame accurate operation with video at anything other than normal forward speed. However, if the ATR is assigned a sync grade of "Preroll and Play" (SYC4) the ATR will accept and perform a programmed DMC edit in the forward direction only. The **APR-5003V** will allow audio monitoring at DMC variable speeds in the forward direction without any special Auxiliary Menu changes.

When using the **APR-5003V** with the **BVE-9000** Editor, the Editor VARI-SCAN argument should never be such as to cause a play speed greater than 100% of its nominal value, this argument being set in a machine-specific manner through the use of the DMC RANGE setup window.

Under certain conditions, the rapid rotation of the supply reel cannot be decelerated at the rate commanded by the Editor, and it is possible for the user to switch between STOP, a fast VARI-SCAN speed, and the normal PLAY speed in a sequence so rapid as to prevent the **APR-5003V** from performing in a manner befitting its excellent tape handling characteristics. Because of this physical tape transport limitation, the following change in the DMC RANGE setup is recommended.

STEP 1. Select the ATR.

STEP 2. Select the DMC RANGE setup window.

STEP 3. Press Function Key F4.

STEP 4. Enter "100" via the Numeric Keypad.

STEP 5. Press "ENTER".

Use of the **BKE-9601** (Time Code Generator/Reader) in conjunction with its parent **BKE-9600** (Intelligent Device Controller) is not recommended for **APR-5003V** control purposes, since this combination does not support Macro-cue facilities with the **BVE-9000** Editor.

For best results, 15 ips tape speed should be used with SONY **BVE-900/9000** Editors. 30 ips has good performance, but program duration is limited by the rapid rate of tape usage. In addition, LOCATE times become longer at 30 ips. At 7.5 ips operation the editor is at somewhat of a disadvantage in that, in pursuit of synchronization, the editor's control actions tend to compromise Time Code read integrity. Thus, while both 7.5 and 30 ips speeds are fully functional, the best combination of fidelity, tape utilization, and locking integrity is realized at 15 ips operation.

Recommended Menu Setup for ATR usage as Player.

"VTR BLOCK #1" SETUP MENU

		NTSC Settings		PAL settings	
Byte 1	(Device Type)	01010000	50	01010000	50
Byte 2	(Device Type)	00000000	00	00000000	00
Byte 3	(Preroll Duration)	00000001	01	00000000	00
Byte 4	(Preroll Duration)	00101100	2C	11111010	FA
Byte 5	(Edit Delay)				
	For 30 ips	00000011	03	00000011	03
	For 15 ips	00000100	04	00000100	04
	For 7.5 ips	00000110	06	00000110	06
Byte 6	(EE Delay)	00000001	01	00000001	01
Byte 7	(Overrun):				
	For 30 ips	00001011	0B	00001010	0A
	For 15 ips	00000111	07	00000110	06
	For 7.5 ips	00001011	0B	00001010	0A
Byte 8	(Trajectory Const)				
	With **BVE-900** Editor				
	For 30 and 15 ips	00111111	3F	00111111	3F
	For 7.5 ips	00010101	15	00010101	15
	With **BVE-9000** Editor				
	For 30 and 15 ips	10111111	BF	10111111	BF
	For 7.5 ips	10010101	95	10010101	95

"VTR BLOCK #2" SETUP MENU

		NTSC Settings		PAL settings	
Byte 1	(TC Read Delay)	00011111	1F	00011010	1A
Byte 2	(Start Delay):				
	For 30 ips	00001101	0D	00001011	0B
	For 7.5 and 15 ips	00001011	0B	00001010	0A
Byte 3	(After Sync Delay –)	11111101	FD	11111101	FD
Byte 4	(After Sync Delay +)	00000010	02	00000010	02
Byte 5	(Max Framing Enable)	00000000	00	00000000	00
Byte 6	(CF Status Enable)	01111000	78	01111000	78
Byte 7	(Pre roll speed)	00001010	0A	00001010	0A
Byte 8	(Quick Preroll)				
	With **BVE-900** Editor	n/a		n/a	
	With **BVE-9000** Editor	00111011	3B	00111011	3B

APPENDIX A

APR-5003V STORAGE/RECALL REGISTER INDEX

Location Number	Location Name	Argument Range
Position Registers 00-29		
00	Synchronization Offset, Frames	time
01	Current IN POINT Preset	time
02	Current OUT POINT Preset	time
03-27	LOCATE Time (Cue Position Data)	time
28	REPEAT Start Time	time
29	REPEAT Stop Time	time
Enables/Disables and Selects 30-49		
30	Auto TC Enable	0/1
31	Time Code Type (SMPTE, EBU, FILM) Select	0/1/2
32	Drop Frame Select (SMPTE only)	0/1/2
33	Remote CHASE Enable	0/1
34	*Reserved*	
35	Burst Time Code Enable	0/1
36	Wind Speed Limit Enable	0/1
37	Establish Lock Reference Select	0/1
38	Maintain Lock Reference Select	0/1/2/3
39	RESOLVE ON PLAY Enable	0/1
40	Auto Shift Down Enable	0/1
41	Ips/Semitone VARI SPEED Display Select	0/1
42	*Reserved*	
43	Triggered EDIT Operation Enable	0/1
44-49	Not Assigned	
Presets 50-59		
50	Acceleration Allowance Preset	time
51	PREROLL DURATION Preset	time
52	POSTROLL DURATION Preset	time
53-59	Not Assigned	
Reserved and non-assigned Registers 60-74		
60-64	*Reserved*	
65-69	Not Assigned	
70-74	*Reserved*	
Special Operations 90-99		
90	Not Assigned	
91	Current IN POINT Bit Delay	00-79
92	Current OUT POINT Bit Delay	00-79
93	FIND Enable	0/1-10
94	Not Assigned	
95	PREVIEW Enable	0/1
96	EDIT Enable	0/1
97	REVIEW Enable	0/1
98	BIT BUMP (Sub-frame Offset)	dial
99	Offset Calculation, Frames	none

APPENDIX B

BAUD RATE SELECTION

For **APR-5003V** operations with all SONY Editor equipments, the baud rate is fixed at 38.4 kilobauds (kbaud). However, the **APR-5003V** may be used at slower baud rates to accomodate other applications. Such other applications could be software created by either the user or by independent developers, this software most likely being run on personal computers. Documentation on the **APR-5003V** serial control facilities will be made at a future date for use by independent developers.

Three baud rates are selectable via the DIP switch S1 on the LNT board, the switch functions being specified as follows:

S1-1	Baud Rate Selection
S1-2	Baud Rate Selection
S1-3	Disable Video/Tone referenced operation*
S1-4	Not Assigned
S1-5	Not Assigned
S1-6	Not Assigned
S1-7	Not Assigned
S1-8	Reserved

* The facility provided by S1-3 is for use with those **APR-5003** models manufactured before the introduction of the **APR-5003V** which have been upgraded to accept **APR-5003V** software. This upgrade does not offer video or tone facilities, all synchronous operations being in reference to external Longitudinal Time Code.

DIP Switch Settings

1. Normal Operation at 38.4 kbaud

S1-1	ON	S1-5	ON
S1-2	ON	S1-6	ON
S1-3	ON	S1-7	ON
S1-4	ON	S1-8	ON

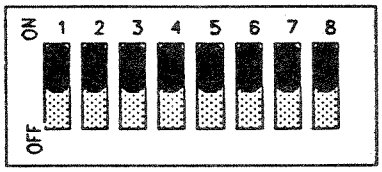

2. Special Operation at 19.2 kbaud

S1-1	OFF	S1-5	ON
S1-2	ON	S1-6	ON
S1-3	ON	S1-7	ON
S1-4	ON	S1-8	ON

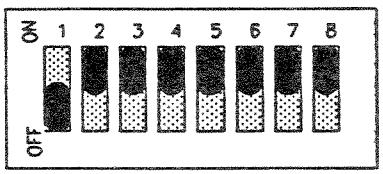

3. Special Operation at 9.6 kbaud

S1-1	ON	S1-5	ON
S1-2	OFF	S1-6	ON
S1-3	ON	S1-7	ON
S1-4	ON	S1-8	ON

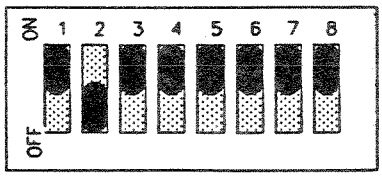

APR-5002/5003
T-9482-914-1

Sony Corporation

Printed in USA
1988.10

SONY

ANALOG TAPE RECORDER

APR-5001
APR-5002
APR-5003V
Series

OPERATION AND MAINTENANCE MANUAL

1st Edition (Revised 1)

APR-5001 Serial No.10001 and Higher

APR-5002 Serial No.20001 and Higher

APR-5003V Serial No.10001 and Higher

WARNING

For the customers in the USA

This equipment generates, uses, and can radiate radio frequency energy and if not installed and used in accordance with the instructions manual, may cause interference to radio communications. It has been tested and found to comply with the limits for a Class A computing device pursuant to Subpart J of Part 15 of FCC Rules, which are designed to provide reasonable protection against such interference when operated in a commercial environment. Operation of this equipment in a residential area is likely to cause interference in which case the user at his own expense will be required to take whatever measures may be required to correct the interference.

Important—To insure that the complete system (including this peripheral) is capable of complying with the FCC requirements, it is recommended that the user make sure that the individual equipment of the complete system has a label with one of the following statements.
"This equipment has been tested with a Class A Computing Device and has been found to comply with Part 15 of FCC rules."
—or—
"This equipment complies with the requirements in Part 15 of FCC rules for a Class A Computing Device."
—or equivalent.

The shielded interface cable recommended in this manual must be used with this equipment in order to comply with the limits for a computing device pursuant to Subpart J of Part 15 of FCC Rules.

For the customers in Canada

This apparatus complies with the Class A limits for radio noise emissions set out in Radio Interference Regulations.

Pour les utilisateurs au Canada

Cet appareil est conforme aux normes Classe A pour bruits radioélectriques, spécifiés dans le Règlement sur le brouillage radioélectrique.

SAFETY CHECK-OUT

After correcting the original service problem, perform the following safety checks before releasing the set to the customer:

Check the metal trim, "metallized" knobs, screws, and all other exposed metal parts for AC leakage. Check leakage as described below.

LEAKAGE TEST

The AC leakage from any exposed metal part to earth ground and from all exposed metal parts to any exposed metal part having a return to chassis, must not exceed 3.5 mA. Leakage current can be measured by any one of three methods.

1. A commercial leakage tester, such as the Simpson 229 or RCA WT-540A. Follow the manufacturers' instructions to use these instruments.
2. A battery-operated AC milliammeter. The Data Precision 245 digital multimeter is suitable for this job.
3. Measuring the voltage drop across a resistor by means of a VOM or battery-operated AC voltmeter. The "limit" indication is 5.25 V, so analog meters must have an accurate low-voltage scale. The Simpson 250 and Sanwa SH-63Trd are examples of a passive VOM that is suitable. Nearly all battery operated digital multimeters that have a 20 V AC range are suitable. (See Fig. A)

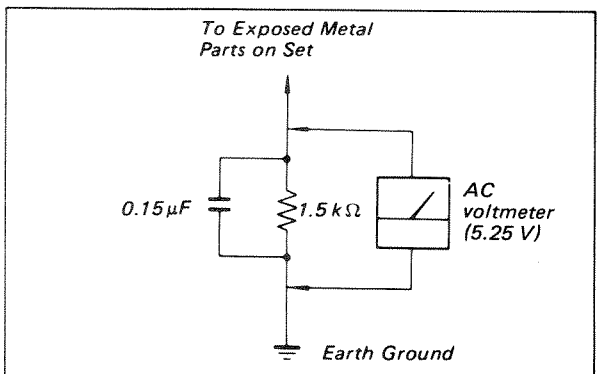

Fig. A. Using an AC voltmeter to check AC leakage.

TABLE OF CONTENTS

SECTION 1 INTRODUCTION **1-1**
1.1 OVERVIEW 1-1
1.2 STANDARD MODELS 1-1
1.3 OPTIONS 1-1
1.4 ADVANTAGES OF COMPUTERIZED OPERATION 1-5
1.5 FEATURES 1-5
1.5.1 Transport 1-5
1.5.2 Audio Electronics 1-7
1.5.3 Time Code Electronics 1-7
1.6 SPECIFICATIONS 1-8
1.6.1 Transport Specifications 1-8
1.6.2 Audio Specifications (¼-inch typical) 1-9
1.6.3 APR-5003V Specifications 1-11
1.6.4 Mechanical Specifications 1-11

SECTION 2 PACKING AND UNPACKING **2-1**
2.1 UNPACKING INSTRUCTIONS 2-1
2.1.1 Unpacking Procedures 2-1
2.1.2 Inventory Check List 2-2
2.1.3 Power Supply Selector Switches 2-2
2.1.4 Assembly and Installation of SU-14 2-3

SECTION 3 INSTALLATION **3-1**
3.1 INSTALLATION NOTES 3-1
3.1.1 Introduction 3-1
3.1.2 Caution Notes 3-1
3.1.3 Operational Environment 3-1
3.1.4 Operating Voltage 3-2
3.1.5 Supplied Accessories 3-2
3.2 REQUIRED CABLES AND CONNECTORS 3-3
3.2.1 Description of Connections 3-3
3.2.2 AC Power Cord 3-4
3.2.3 Audio Cabling 3-4
3.3 PARALLEL REMOTE ACCESS 3-4
3.3.1 Command Lines 3-4
3.3.2 EXTERNAL MVC Input 3-4
3.3.3 EXTERNAL CAPSTAN SOURCE SELECT Input 3-5
3.3.4 EXTERNAL CAPSTAN SOURCE Input 3-5
3.3.5 RECORD READY Inputs 3-5
3.3.6 TAPE DIRECTION and TAPE TACHOMETER Inputs 3-5
3.3.7 FADER START and FADER START ENABLE Inputs 3-5
3.3.8 Status Lines 3-5
3.3.9 CAPSTAN REFERENCE Output 3-6
3.3.10 TAPE DIRECTION Output 3-6
3.3.11 TAPE TACHOMETER Output 3-6
3.3.12 Meter Outputs 3-6
3.3.13 Parallel Remote Access Pin-out 3-6
3.4 SERIAL REMOTE ACCESS 3-8
3.5 CALIBRATION CONNECTORS 3-8
3.6 NOISE REDUCTION CONNECTOR 3-8
3.7 INPUT/OUTPUT SIGNALS 3-9
3.8 SYSTEM OPERATION CHECK LIST 3-10
3.8.1 Transport Functions 3-10
3.8.2 Alignment Control Panel 3-15
3.8.3 Audio Functions 3-19
3.9 METER CALIBRATION 3-20

SECTION 4 CONTROLS AND INDICATORS **4-1**
4.1 OVERVIEW 4-1
4.2 TRANSPORT CONTROL PANEL 4-1
4.2.1 Functions of Buttons 4-2
4.2.2 Computerized Operations 4-4
4.3 ALIGNMENT CONTROL PANEL 4-6
4.3.1 Alignment Procedures 4-6
4.3.2 Track Selector 4-6
4.3.3 Parameter Selection 4-6
4.3.4 Audio Parameter Calibration Adjustment 4-7
4.3.5 Equalization Standards 4-8
4.3.6 Preset Alignments 4-9
4.3.7 Speed Select Switches 4-10
4.3.8 User Label 4-10
4.3.9 Status Display 4-10
4.3.10 Secondary Functions 4-10
4.4 METER HOUSING CONTROLS 4-12
4.4.1 Audio Channel Functions 4-12
4.4.2 Monitor Speaker SSA-50 4-13

SECTION 5 OPERATION **5-1**
5.1 PREPARATIONS 5-1
5.1.1 Getting Started 5-1
5.1.2 Mounting the Reels 5-1
5.1.3 Threading the Tape 5-2
5.2 TRANSPORT CONTROL 5-2
5.2.1 Tape Break Indicator 5-2
5.2.2 Fast Wind Modes 5-3
5.2.3 MVC Operation 5-4
5.3 RECORDING 5-4
5.3.1 Preparations 5-4
5.3.2 Audio Level Adjustments 5-5
5.3.3 To Start Recording 5-5
5.3.4 Monitoring During Record 5-6
5.4 PLAYBACK 5-6
5.4.1 Preparation 5-6
5.4.2 To Start Playback 5-6
5.5 RECORD PUNCH-IN 5-6
5.6 OTHER OPERATIONS 5-7
5.6.1 Spot Erasing 5-7
5.6.2 Repeat Function 5-8

SECTION 6 MAINTENANCE AND CALIBRATION PROCEDURES **6-1**
6.1 OVERVIEW 6-1
6.2 NECESSARY TOOLS 6-1
6.2.1 Test Equipment 6-1
6.2.2 Required Service Items 6-1
6.2.3 Test Tapes 6-2
6.2.4 Tools 6-2
6.3 ROUTINE MAINTENANCE 6-2-2
6.4 DISASSEMBLY FOR SERVICING 6-2-2
6.4.1 Headstack 6-2-2
6.4.2 Removal of Top Front Cosmetic Cover 6-3
6.4.3 Removal of Top Rear Cosmetic Cover 6-4

6.5 TRANSPORT ADJUSTMENT PROCEDURES 6-5
6.5.1 Cleaning Tape Path 6-6
6.5.2 Demagnetizing The Heads 6-7
6.5.3 Cleaning Moving Guides 6-7
6.5.4 Check the Reel Motor Brake Assemblies 6-8
6.5.4.1 Reel Motor Brake Adjustment 6-8
6.5.4.2 Reel Table Height Adjustment 6-9
6.5.5 Renew Time Meter 6-9
6.5.6 Head Alignment 6-10
6.5.6.1 Head Zenith Adjustment 6-10
6.5.6.2 Head Height Adjustment 6-11
6.5.7 Headstack Identification Code 6-12
6.5.8 Reel Tach Sensor (RTS) and Tape Tach Sensor (TTS) Adjustment 6-13
6.5.9 Reel Motor Driver (RMD) Offset Adjustment 6-16
6.5.10 Tape Tension 6-17
6.5.11 Pinch Roller Adjustment 6-17
6.5.12 Flutter Dampening Arm Adjustment 6-18
6.5.13 Roller Guide Adjustments 6-21
6.5.14 End of Tape Sensor Adjustment 6-23
6.5.15 Flutter Adjustment 6-24
6.5.16 Variable Speed Adjustment 6-25
6.5.17 MVC Adjustments 6-25
6.5.18 Tape Lifter Adjustment 6-27
6.6 AUDIO SYSTEM PLAYBACK CALIBRATION 6-27
6.6.1 Head Azimuth and Head Wrap Adjustments 6-28
6.6.2 Setting Equalization Standard 6-29
6.6.3 Repro Level Calibrations 6-29
6.6.4 Repro High Frequency Alignment 6-29
6.6.5 Sync Level Alignment 6-30
6.6.6 Sync High Frequency Alignment 6-30
6.6.7 Reproduce Frequency Response Verification 6-30
6.6.8 Storing Alignments to PRESET Memory 6-31
6.6.9 MID and LOW Speed Alignments 6-31
6.7 AUDIO SYSTEM RECORD CALIBRATION 6-32
6.7.1 Record Level/Bias Level Alignment 6-32
6.7.2 Record High Frequency 6-33
6.7.3 Repro Low Frequency Alignment 6-33
6.7.4 Sync Low Frequency Alignment 6-34
6.7.5 Record/Repro Frequency Response 6-34
6.8 SECONDARY RECORD COMPENSATIONS 6-35
6.8.1 RCB 6-35
6.8.2 RCF 6-35
6.8.3 Adjusting the Secondary Record Compensations 6-35
6.8.4 Gap Compensation 6-35

SECTION 7 BLOCK DIAGRAMS 7-1
SYSTEM 7-1
LOGIC FLOW 7-3
TAPE TRANSPORT 7-5
AUDIO SYSTEM 7-7

SECTION 8 SEMICONDUCTOR DEVICES 8-1
8.1 HCMOS Devices 8-1
8.2 LS Devices 8-4
8.3 LSI ICs 8-5

SECTION 9 SCHEMATIC AND CIRCUIT BOARD DIAGRAMS **9-1**
9-1. SCHEMATIC AND CIRCUIT BOARD DIAGRAMS 9-1
MAIN UNIT
ACM Board 9-3
AHB Board 9-7
ADM Board 9-8
ALN Board 9-11
CNL Board 9-15
CNX Board 9-23
CPU Board 9-27
CTM Board 9-40
DSP Board 9-44
FEX Board 9-48
HES Board 9-51
KBD Board 9-52
MSB Board 9-55
LNT Board 9-56
MST Board 9-59
RMD Board 9-63
RTS Board 9-65
SBR Board 9-66
TCC Board 9-67
TCM Board 9-75
TIB Board 9-76
TTS Board 9-83
VVT Board 9-84
POWER SUPPLY
CSL Board 9-88
PDB Board 9-91
RGA Board . . . . . 9-95 (a)
RGB Board . . . . . 9-96 (a)
RG-1 Board . . . . . 9-95 (b)
RGC Board . . . . . 9-97 (a)
RGD Board . . . . . 9-98 (a)
RG-2 Board . . . . . 9-97 (b)

SECTION 10 REPLACEABLE PARTS **10-1**
10.1 EXPLODED VIEWS AND PARTS LIST 10-1
10.2 ELECTRICAL PARTS LIST 10-55
10.3 ACCESSORIES SUPPLIED 10-160

SECTION 11 RM-5010 REMOTE CONTROLLER INSTALLATION **11-1**
11.1 INTRODUCTION 11-1
11.2 INSTALLATION 11-1
11.3 OPERATIONAL CHECKOUT 11-1
11.4 ENGINEERING DRAWINGS 11-3

APPENDIX

A. ERROR CODES A-1
B. LIST OF MNEMONICS B-1
C. APR-5000 UNIQUE TOOLS C-1
D. SERIAL CONTROL WITH SONY BVE-900 and BVE-9000 EDITORS D-1
E. APR-5003V STORAGE/RECALL REGISTER INDEX E-1
F. BAUD RATE SELECTION F-1
G. GLOSSARY G-1

SECTION 1
INTRODUCTION

1.1 OVERVIEW

The **APR-5000** Series represents a line of full feature Professional Audio Recorder/Reproducers for broadcasting, recording studio, video and film production environments.

The **APR-5000** represents a new level of functional intelligence and overall flexibility. This machine incorporates the latest digital technology for controlling the analog professional recorder. It is available in desktop, console for ease of installation. (See Section 1.3 for a list of options and model numbers.)

The transport is built around a high strength, low mass aluminum casting, 16-bit microprocessor controlling an all DC transport. Parallel remote control port is available for flexible system integration. Serial remote control port will be available in future. Synchronization features are provided for EBU, SMPTE DROP FRAME, and SMPTE NON-DROP FRAME time code formats.

The **APR-5003V** Recorder/Reproducer is an extended version of the standard **APR-5003**, and includes new features which are designed for use in Video Post Production, Film Audio Production and Radio Station/Radio Network operations, as well as Recording Studio work.

The fundamental operational and performance characteristics of the **APR-5003V** remain the same as those for all other **APR-5000** series machines, and are fully described in the **APR-5000** Series Operation and Maintenance manual. This Supplement provides information relevant to the **APR-5003V**.

The audio electronics incorporate new electronic techniques for unsurpassed performance from any other analog recorder. The microprocessor controlled alignment storage feature has the capability of storing alignment presets into memory. This allows the user to change the calibration of the machine at the push of a button. Each headstack has its own identification code. This makes it possible to store different preset alignments for different applications. The user has maximum flexibility when changing between alternative tape types, different reference fluxivities, overbias settings, and record/reproduce equalization standards.

1.2 STANDARD MODELS

The standard **APR-5000** Series consists of two models:

- **APR-5002**
  Standard 2-track model. This is available in ¼-inch (NAB or DIN track) or ½-inch configuration. The ¼-inch model is available in high speed (7.5 ips to 30 ips).

- **APR-5003V**
  Time Code (Center Track) version. The meter housing on the APR-5003V contains two audio channels, the time code channel, and a monitor speaker. It uses ¼-inch tape and is available only in the high speed model.

APR-5002, and APR-5003V are equipped with a Monitor Speaker Unit as standard equipment.

1.3 OPTIONS

The following is a description of optional accessories for the **APR-5000** Series Digitally Controlled Analog Tape Recorder:

Stand **SU-14** — A variable profile stand which converts the machine from desk top version to stand alone version.

Remote Control **RM-5010** — This remote control unit allows the user to control the machine transport functions and enable channels for recording from a remote location.

Scissor Option **APR-5010** — In editing operations, this option becomes very useful inasmuch as it expedites production. This option must be installed at the factory, and is available only on those machines with 1/4-inch headstacks.

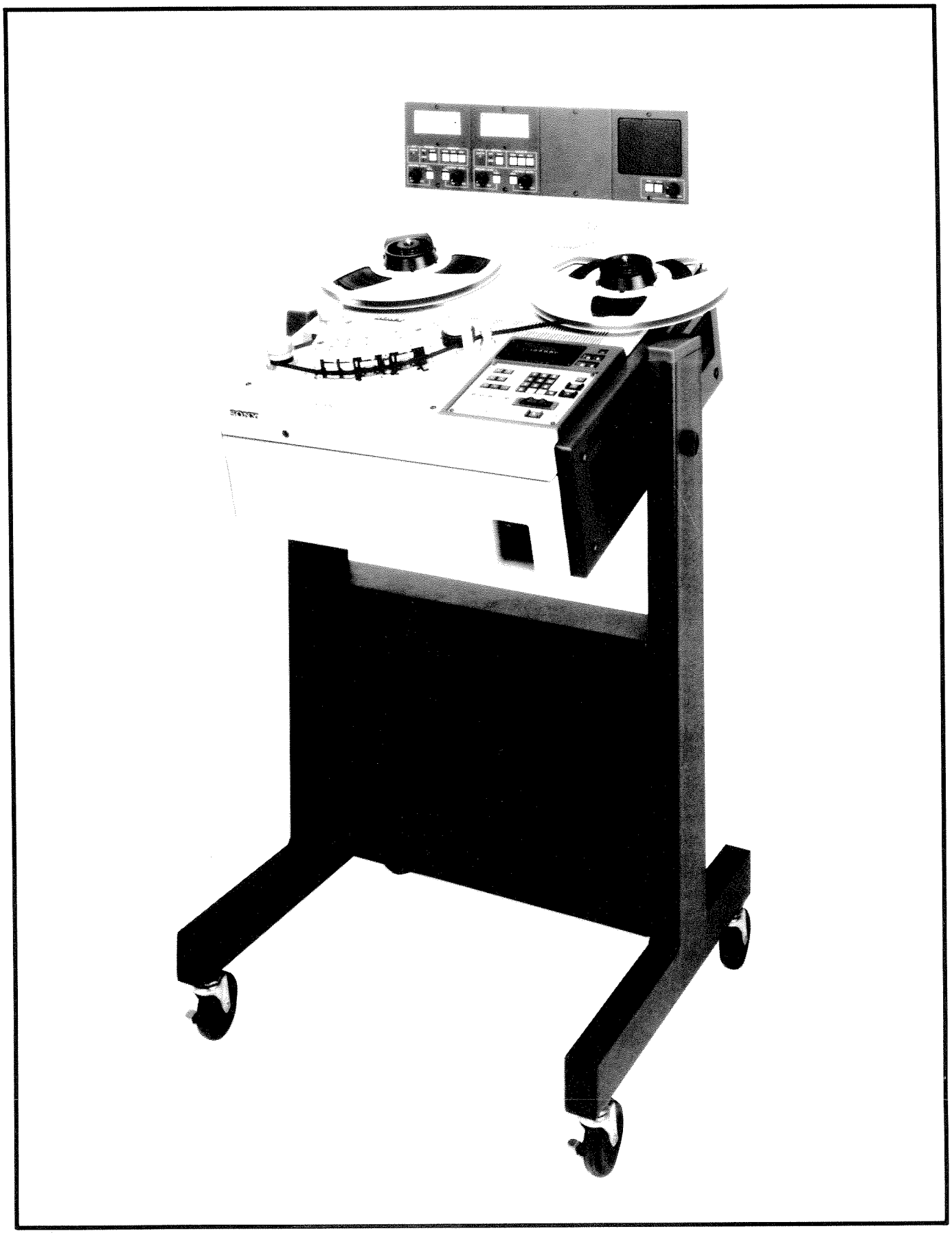

APR-5002, Analog Tape Recorder (Standard 2-Track)

APR-5003V, Analog Tape Recorder (Time Code Center Track)

1.4 ADVANTAGES OF COMPUTERIZED OPERATION

The transport of the **APR-5000** is computer controlled. It has the ability to constantly monitor the transport's variables such as the reel motor velocities, the capstan motor speed, as well as the other sensors used to provide information from the transport. The computer constantly corrects for any variations in operation offering the most precise speed stability and superior tape handling capabilities.

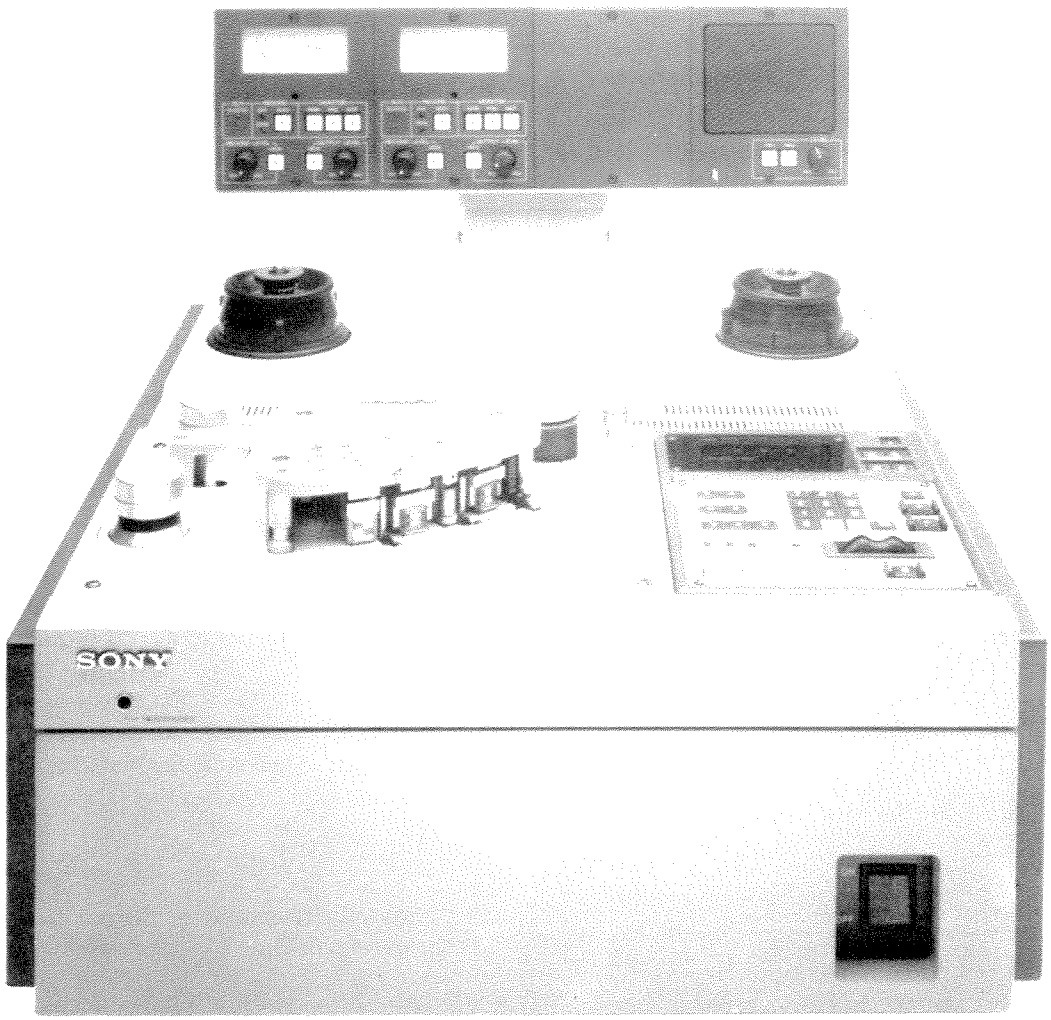

APR-5002 Table Top Version

1.5 FEATURES

1.5.1 Transport

- Computerized system control with the capability of interfacing with other intelligent (serial communications in future) or unintelligent (parallel commands/status) synchronizers or other studio automation equipment.
- Built-in precision tape counter. Resolution down to 1/30th of a second (one frame of SMPTE code).
- The Serial Control Port (in future) is upwardly compatible with the developing SMPTE/EBU Network standard for remote control with synchronizer or other studio automation system. All transport and audio functions can be controlled through the network interface.

- MVC (Manual Velocity Control) knob for user control of tape spooling and vari-speed. This knob controls the wind speed and direction in the Search mode of operation. In wind modes, the MVC knob actuates the spool wind mode. In vari-speed play mode, the MVC knob controls the deviation from standard speed. The display indicates to the user the amount of deviation from standard speed as a percentage.

- Reel size and reel type changeable from one format to another with no servo adjustment. The deck is capable of using NAB A reels (3 in., 5 in., or 7 in.), NAB B reels (10 1/2 inch), or DIN 1000m (11½-inch). It will accept reels up to 12½-inches in diameter maximum.

- Universal power supply which can be switched to operate over a wide range of voltages, 50Hz or 60Hz line frequency, single phase power.

- Three tape speeds. The range is determined by the headstack identification code. The speeds will range from 7.5 ips to 30 ips.

- Servo controlled capstan motor with a ceramic shaft for durability and accurate operation. The capstan motor is referenced by the microprocessor controller to a quartz crystal. Variable speed operation is also supported ±50% of standard speed.

- Autolocator functions with the ability of locating to any of 29 memory locations.

- Repeat operation to create automatic looping operation.

- Interchangeable headstack configurations . This allows the same machine to be operated at various configurations. The headstack has its own identification code. The ID code is recognized by the transport and used to set the alignment specifications as well as the tape transport speed range. When the tape width is also being changed, roller guides are also easily changed from the ¼-inch format to the ½-inch format.

- Spot Erase feature disabling the pinch roller and the bias during record for precise spot erasing.

- Lifter defeat function allows for fast audible cueing when required. It is used in conjunction with one of the fast wind speeds.

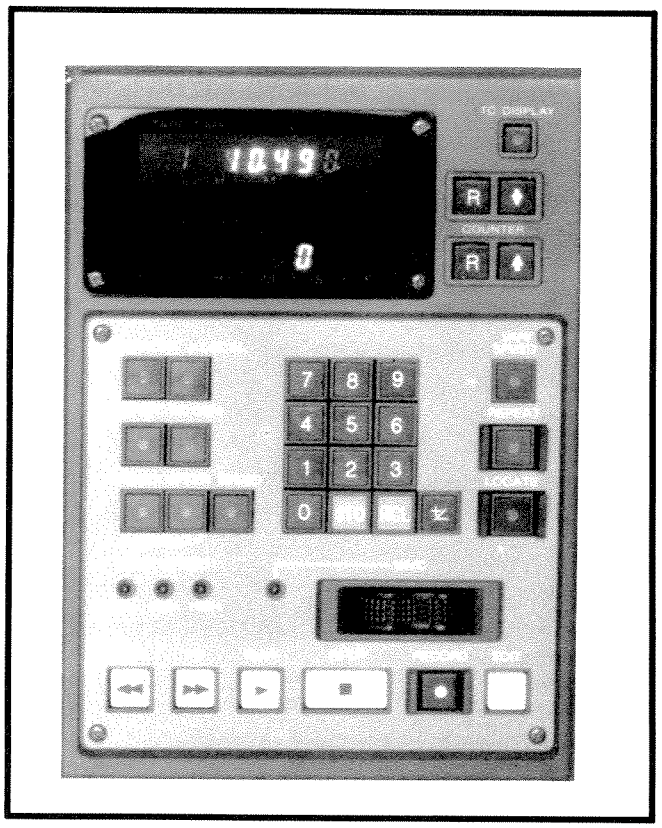

Figure 1-5. Transport Control

Features incorporated in the **APR-5003V** include:

- RESOLVE ON PLAY — Establishes and maintains synchronous operation between Time Code from tape and an external reference, regardless of any offset.

- PREVIEW, EDIT and REVIEW — These features provide a series of editing capabilities. These can be manually triggered or automatically triggered from external Time Code.

- FIND — Provides for speedy access to any Time Code location within a number of discontiguous Takes.

- Enhanced CHASE mode operation which allows for synchronization to either Longitudinal Time Code or Vertical Interval Time Code.

- Enhanced Time Code recording capability which permits internal recording from an external reference.

The operational differences with these new or enhanced features are described in the following pages, together with such procedures as may be necessary. It should be noted that all of these procedures presuppose that the user is familiar with basic **APR-5000** operations.

1.5.2 Audio Electronics

- The **APR-5000** is capable of supporting mono, two-track, and three-track (SMPTE/EBU Time Code) formats.
- A very high frequency bias which helps eliminate "edit squeal".
- The audio circuitry used is of the latest design based on experience from the current line of analog circuit technology.
- Shield defeat function useful for disabling the shield when in the editing environment.
- The Alignment Control Panel replaces the all normal alignment trim pots. Alignment using the Alignment Control Panel is fast and easy. The alignment can then be stored in a preset memory location and can be recalled at the push of a button.
- Three presets for each tape speed can be stored by the user. These can be used to select an alternative over-bias, alternative reference fluxivity, multiple tape formulations and/or manufacturers, or the necessity to switch from one equalization standard to another (NAB, IEC, or AES).
- The memory for the computer assisted alignment presets is battery backed-up so that data will not be lost when the machine is powered down or in the event of a power failure.
- There is a calibration input on the rear audio panel which feeds an external test oscillator to the audio tracks. This is accessed by a BNC connector for direct connection to the test equipment.
- On the back panel there is a 9-pin D connector used for a noise reduction interface.

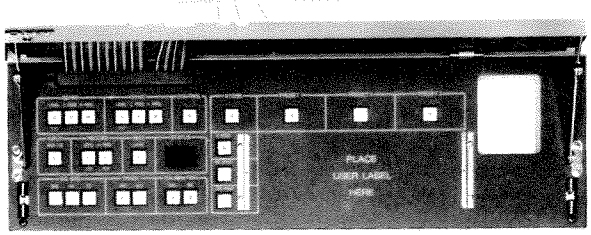

Figure 1-6. Alignment Control Panel

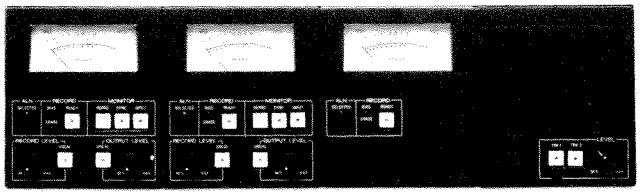

Figure 1-7. Audio Channel

1.5.3 Time Code Electronics

- There is a special time code equalization setting designed especially for time code data on three-track configurations.
- There is a time code generator built into the APR-5003.
- The APR-5003 is capable of CHASE mode operation. The APR-5003 will follow an external time code signal.

NOTE: Time Code recordings made on the **SONY APR-2003** Analog Tape Recorder are at a higher signal level than those made on **APR-5003**. As a result, when **APR-2003** recordings are reproduced on the **APR-5003**, the VU meter tends to go beyond full-scale deflection. However, this is not detrimental to equipment operation, and need be of no concern to the operator.

1.6 SPECIFICATIONS

1.6.1 Transport Specifications

POWER REQUIREMENTS	AC100/110/120/200/220/240V at 48Hz to 64Hz (Selectable)	
POWER CONSUMPTION	300 Watts Max.	
FUSE RATING	5A (100V), 4A (110V), 2A (200V) (Normal Load Fuse)	
REEL SIZE	3 to 12½ inches	NAB or EIA, plastic or metal reels DIN hubs optional
TAPE WIDTH	1/4-inch 2-track 1/4-inch 2-track 1/4-inch 3-track 1/2-inch 2-track	NAB track standard DIN track standard Center Track Time Code
TAPE SPEED	Standard (high speed) Variable Speed	7.5, 15, and 30 ips ± 50% of fixed speed
SPEED STABILITY	Better than 0.02%	
TAPE TENSION NOMINAL	120 grams	
START-UP TIME/ FLUTTER SPECIFICATION		**% DIN 45507 flutter (with 10½-inch reels)**
	900 msec at 30 ips	0.3%
	500 msec at 15 ips	0.15%
	500 msec at 7.5 ips	0.15%
FAST WIND TIME	110 sec for 2400 feet of tape 170 sec for 4800 feet of tape	
SPOOL WIND TIME	370 sec for 2400 feet of tape	
MVC VELOCITY	From full stop to 1.9 meters per second in either direction.	

Table 1-1. Transport Specifications

1.6.2 Audio Specifications

WOW AND FLUTTER	Less than 0.025% at 30 ips (DIN 45507 weighted) Less than 0.035% at 15 ips (DIN 45507 weighted) Less than 0.055% at 7.5 ips (DIN 45507 weighted) Less than 0.100% at 3.75 ips (DIN 45507 weighted)
FREQUENCY RESPONSE	**RECORD/REPRODUCE (Using Scotch 226 tape)** 30 ips, AES* 50Hz to 28kHz +0.75dB, −3dB 15 ips, NAB 30Hz to 24kHz +0.75dB, −2dB 7.5 ips, NAB 30Hz to 20kHz +0.75dB, −1.5dB *wide profile head option **RECORD/SYNC** 30 ips, AES* 50Hz to 20kHz +0.75dB, −3dB 15 ips, NAB 30Hz to 16kHz +0.75dB, −2dB 7.5 ips, NAB 30Hz to 8kHz +0.75dB, −2dB *Wide Profile Head Option
RECORDED SIGNAL TO NOISE RATIO	**RECORD/REPRODUCE referenced to 510nWb/m** **Unweighted: 20Hz to 20kHz** (Third Order Harmonics) **MONO** / **2-TK** / **TC** 30 ips, AES: 70dB / 65dB / 65dB 15 ips, NAB: 68dB / 62dB / 62dB 7.5 ips, NAB: 67dB / 62dB / 62dB **Weighted: dB(A)** 30 ips, AES: 74dB / 70dB / 70dB 15 ips, NAB: 70dB / 67dB / 67dB 7.5 ips, NAB: 70dB / 67dB / 67dB
DISTORTION	Harmonic distortion reference to a level of 510nWb/m 1kHz fundamental frequency: 3rd Harmonic: Less than 0.35% at 30 ips, AES Less than 0.52% at 15 ips, NAB Less than 1.6% at 7.5 ips, NAB 2nd Harmonic: Less than 0.10% at 30 ips, AES Less than 0.10% at 15 ips, NAB Less than 0.1% at 7.5 ips NAB 3% third harmonic fluxivity level: 1040nWb/m at 30 ips, AES 1020nWb/m at 15 ips, NAB 1000nWb/m at 7.5 ips, NAB RECOMMENDED DISCLAIMERS FOR PUBLISHED SPECIFICATIONS (Continued on next page.)

DISCLAIMER DISTORTION & NOISE SPECIFICATIONS	(Distortion and Noise spec. disclaimer) Distortion and Record/Reproduce noise are primarily functions of tape formulation. The Specifications shown are for the standard NAB HEAD configuration. In the case of Distortion, bias settings have a very significant influence. Bias settings are a user chosen parameter based on average program fluxivity, desired frequency response. Distortion and Noise performance may vary from one tape formulation to another, reel to reel. The specifications are shown to indicate achievable performance with a popular modern high coercivity tape formulation. (Global disclaimer) All specifications are typical at 25 degrees C, and are subject to change without notice. Sony reserves the right to make alterations in features and specifications as technical progress may warrant.
BIAS FREQUENCY	400kHz
ERASE FREQUENCY	100kHz
DEPTH OF ERASURE	Measured at reference frequency of 1kHz at a reference fluxivity level of 250nWb/m. Better than 76dB for all audio channels (all formats)
AUDIO AMPLIFIER ELECTRONICS	Input impedance 10k ohms balanced Output impedance 120 ohms balanced Output clipping +24dBm

Table 1-2. Audio Specifications

1.6.3 APR-5003V Specifications

All specifications for the **APR-5003V** remain the same as for the current **APR-5003** except for the following items which reflect the new video related features:

VIDEO INPUT/OUTPUT CONNECTORS	Two BNC Connectors with switchable 75Ω termination
INPUT LEVEL	Composite Sync or Video Setting–Input impedance 10K (jumper installed at JU1 on BVT board) Video–Standard RS-170A level (nominal) or Sine wave input–0.4 Vp-p min, 6.0 Vp-p max or Square wave input–0.2 Vp-p min, 6.0 Vp-p max Logic Setting–100K input impedance (jumper installed at JU2 on BVT board) Accomodates either TTL or CMOS logic families directly or Sine wave input–3.0 Vp-p min, 20 Vp-p max or Square wave input–1.5 Vp-p min, 20 Vp-p max

Table 1-3. APR-5003V Specifications

1.6.4 Mechanical Specifications

Weight: **Table Top** **Stand Type**	 91 pounds (46.26 Kg.) 138 pounds (70.15 Kg.)
Operating Temperature	+5°C to +35°C (+41°F to 95°F)
Storage Temperature	−20°C to 70°C (−4°F to 158°F)
Humidity	10 to 90 non-condensing
Operating Position (SU-14 Stand)	Horizontal or 15 degrees tilt
Specification Guarantee Temperature	25°C (77°F)

Table 1-4. Mechanical Standards

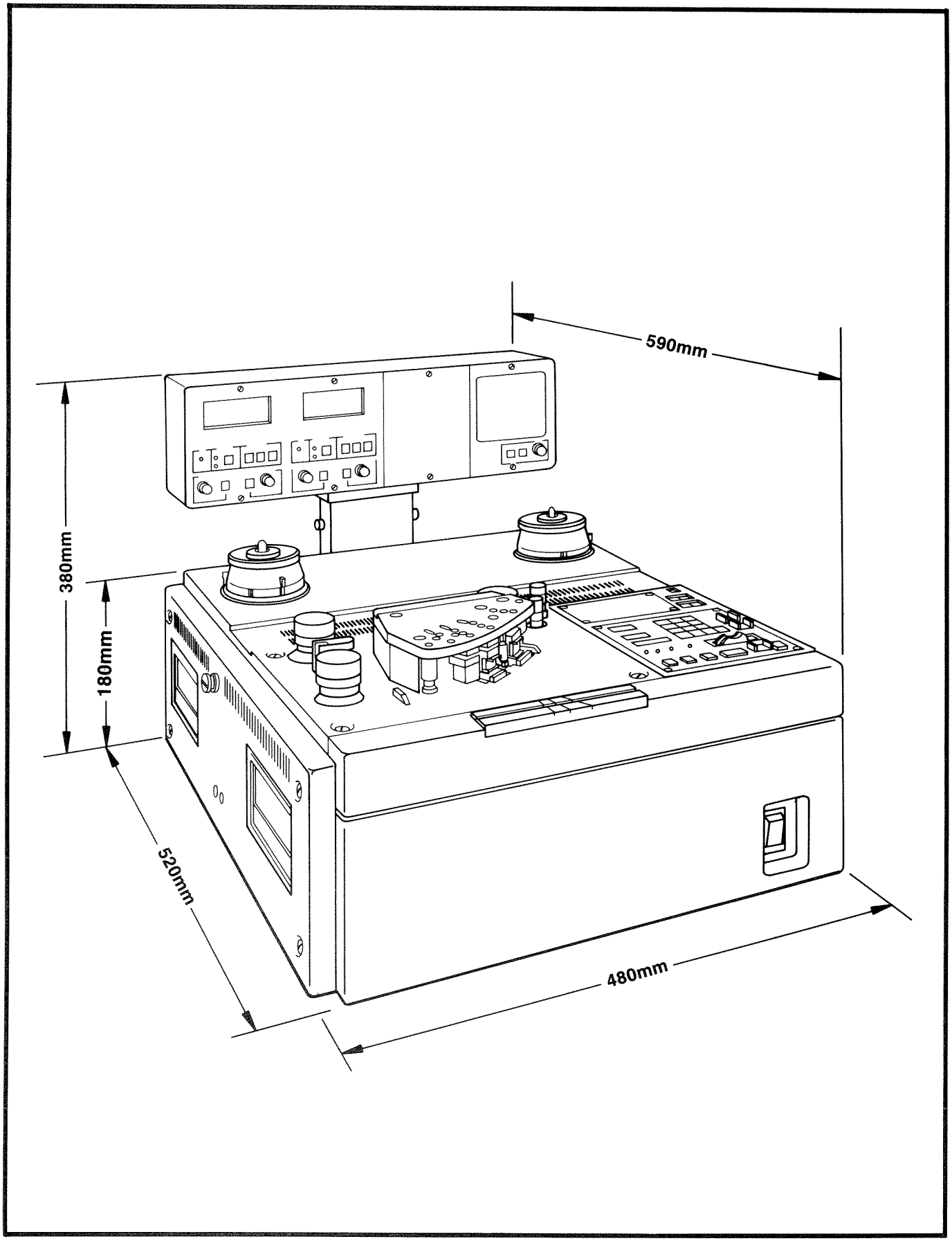

Figure 1-8. Dimensions for APR-5000 Series

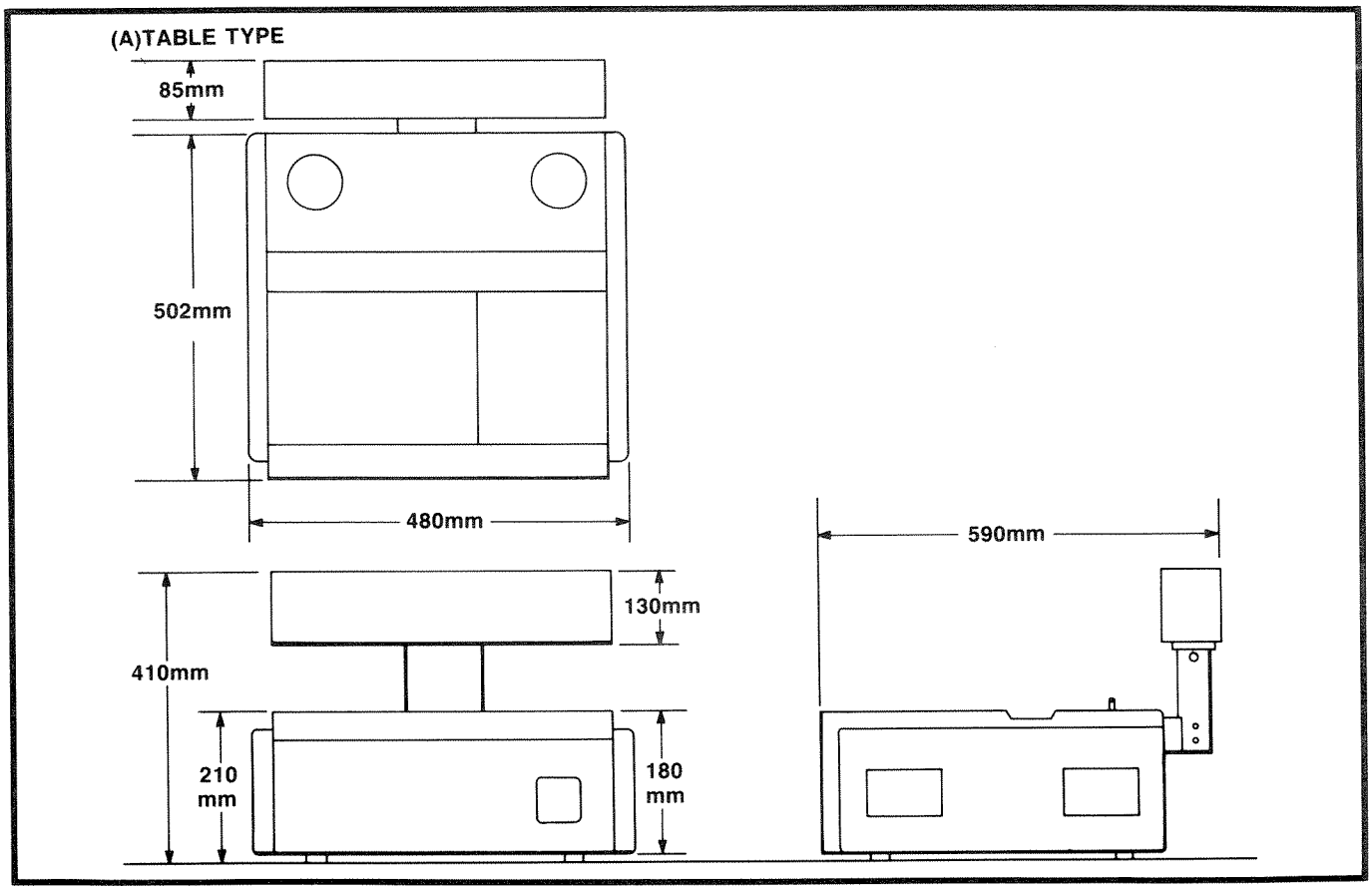

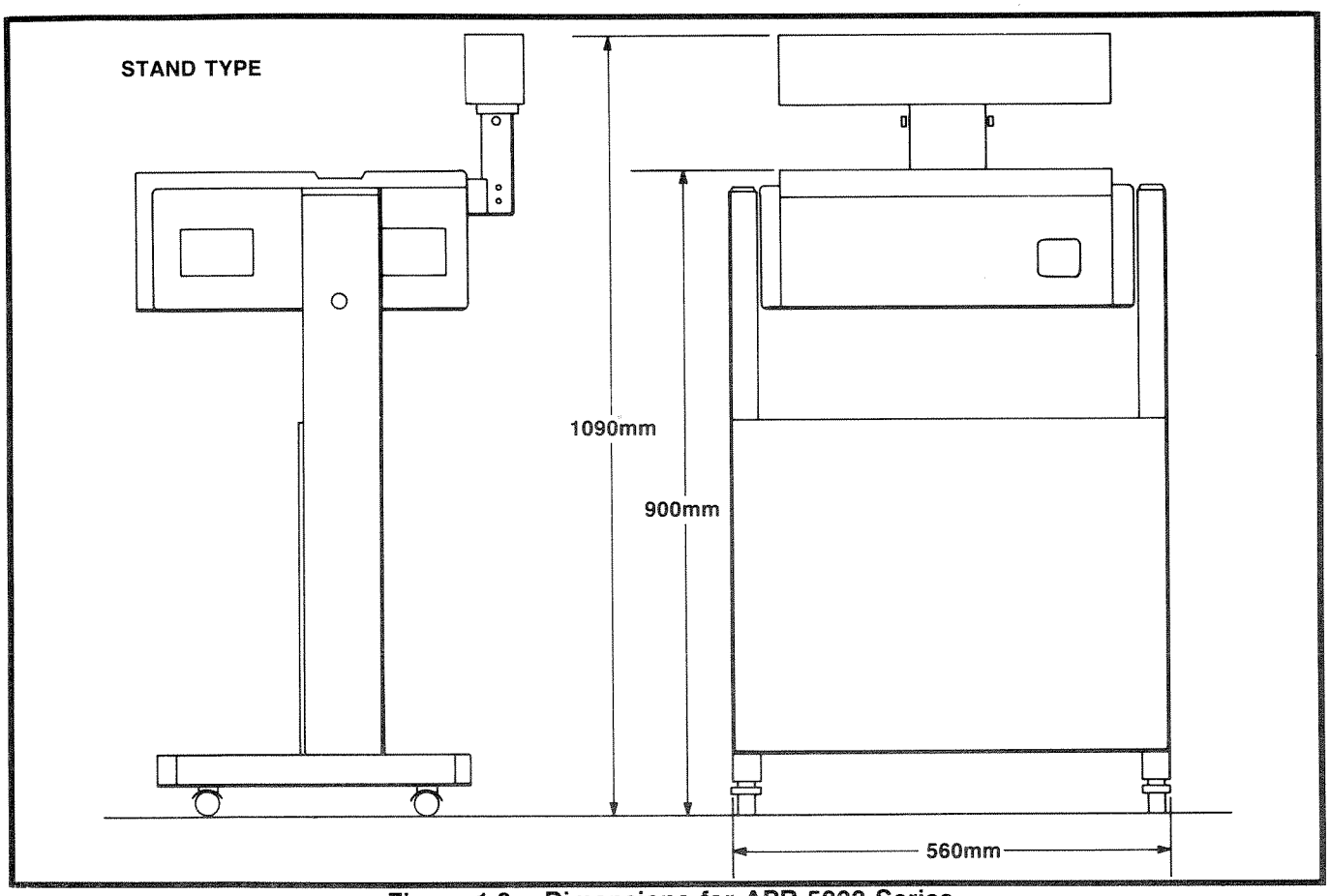

Figure 1-8. Dimensions for APR-5000 Series

SECTION 2
PACKING AND UNPACKING

2.1 Unpacking Instructions

The deck and meter housing of the **APR-5000** are packaged together for shipment. Use caution when unpacking adhering to the following procedures to avoid damage to the contents of any of the boxes. Inspect the carton(s) for exterior damage before opening them. If any concealed damage is discovered, notify your freight agent at once and request him to make an inspection. Save the carton(s) and packing material in case it becomes necessary to ship the equipment back for adjustment or repair.

2.1.1 Unpacking Procedures

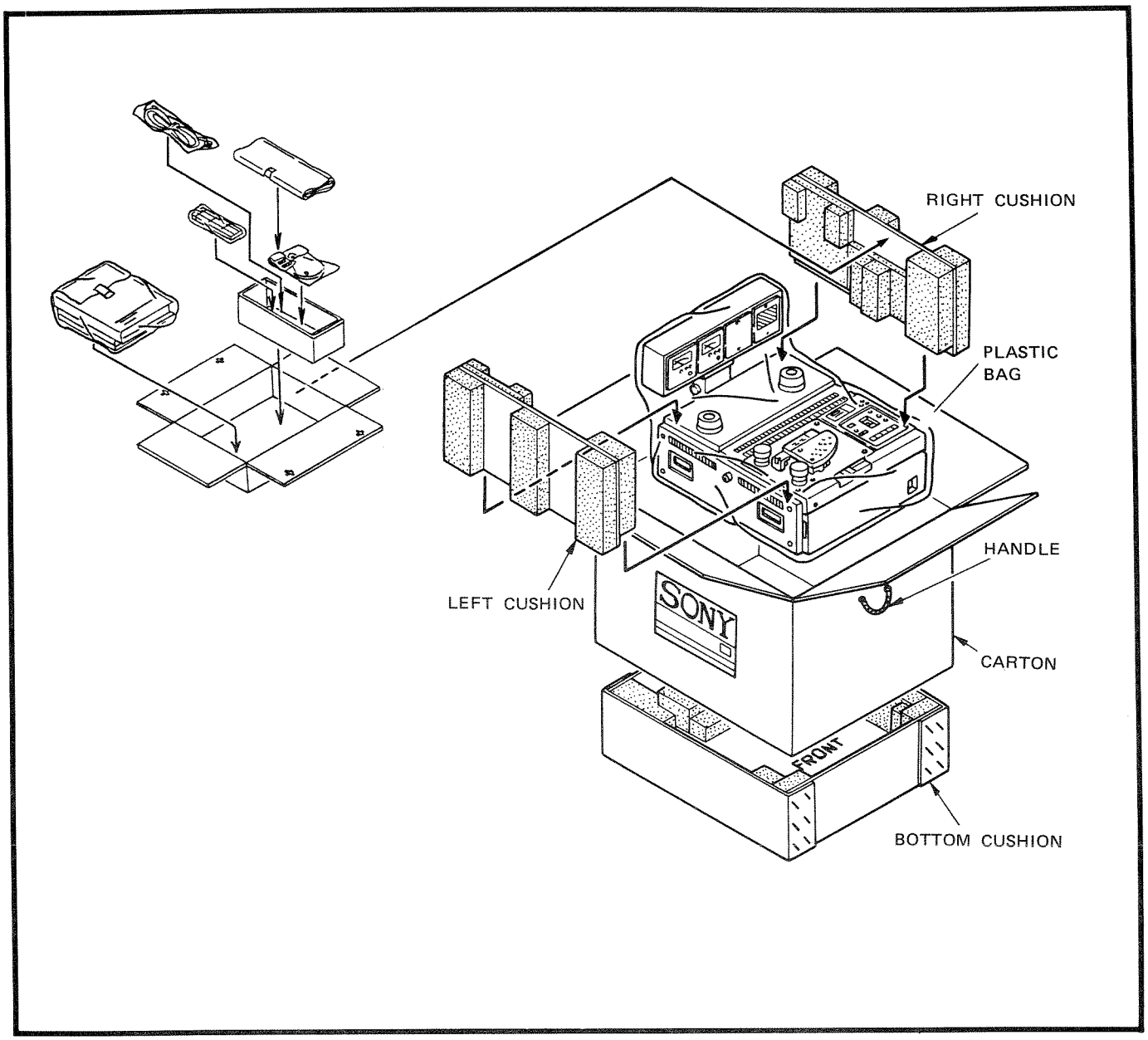

Figure 2-1. APR-5000 Packaging

2.1.2 Inventory Check List

Ensure that all of the following parts are unpacked from the boxes:

- **APR-5000**
- (1) Meter Housing
- (1) **APR-5000** Operation and Maintenance Manual
- (1) Take-up Reel
- (1) 10½ inch Reel of Tape (2400 feet)
- (1) Extender Board
- (1) AC Power Cord
- (2) Reel Hubs (may be installed on reel motor spindles)
- (2) Reel Platter Shims (may be installed on reel motor spindles)
- (1) Packet User Labels (packet of 50)
- (1) Packet Fuses (packet of 3)
- (1) Headstack Cover

Also, check for the following options (if applicable).

- SU-14 Base Stand
- RM-5010 Remote Control Unit
- APR-OP5010 Scissor Option (Factory installed)
- APR-OP5020 Head Block Unit-NAB Stereo Two Track
- APR-OP5030 Head Block Unit-IEC Center Track Time Code
- APR-OP5040 Head Block Unit-Full Track Mono
- APR-OP5050 Head Block Unit-1/2 inch Stereo Format

2.1.3 Power Supply Selector Switches

The **APR-5000**'s power line voltage can be set for any of six different voltage levels: 120 V (Hi-Nominal-Low) or 240 V (Hi-Nominal-Low). Before connecting the AC power cord to the power source, check the power supply to assure the switch is positioned to the correct voltage A warning sticker placed over the AC power connector on the **APR-5000** will inform the user of the voltage setting of the power supply when shipped from the factory. The **APR-5000** can operate on either 50 Hz or 60 Hz. (See Figure 2-2 for an explanation of switch positions.)

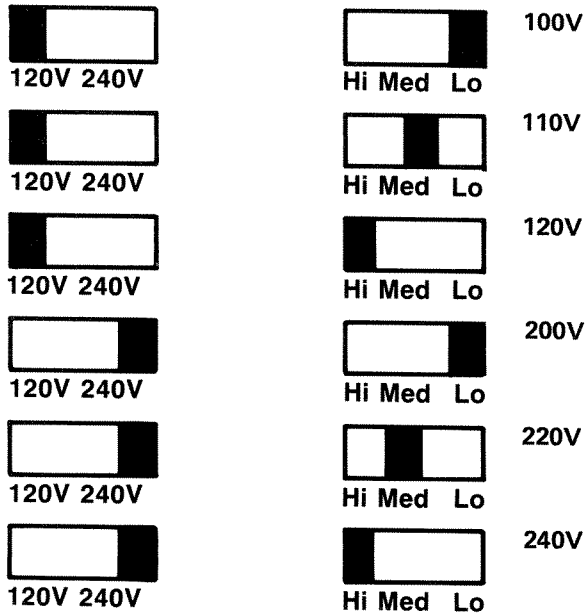

Figure 2-2. Power Supply Selector Switches

2.1.4 Assembly and Installation of SU-14

STEP 1 Remove all parts from the shipping box. The following parts will be found:

- 2 Cross Members
- 1 Cover Plate
- Hardware (16 screws)

STEP 2 Assemble the SU-14 stand according to Figure 2-3. First install the 2 cross braces with the 2 screws into each of the vertical support members to attach each of the cross braces. Make sure that the cross braces are installed with the tapped screw hole facing forward.

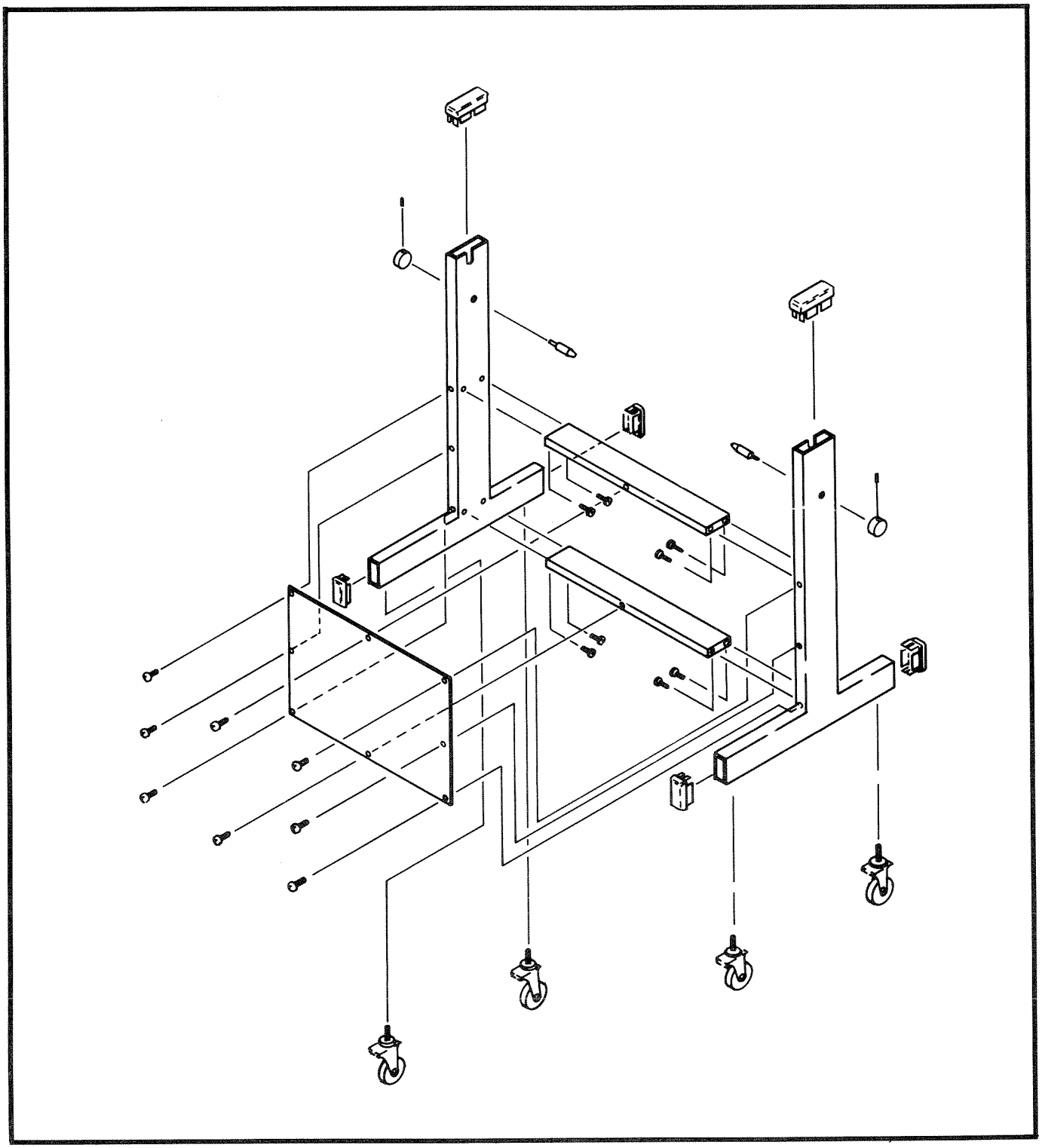

Figure 2-3. Exploded View of SU-14 Stand

STEP 3 Install panel with eight Totsu screws. Three screws will install into each of the vertical support members and one screw will be installed into each of the cross braces.

STEP 4 Remove plastic base support covers from the top of the left and right stand posts.

STEP 5 Unscrew deck hold down knob on either side of stand (See Figure 2-4.) so that none of the shaft stop is visible on the inside of post.

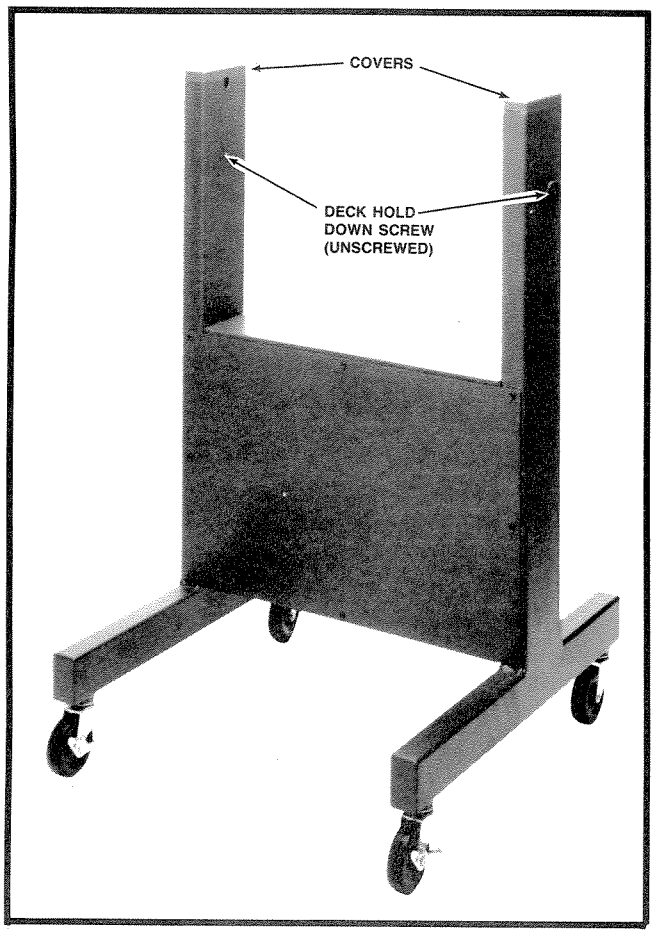

Figure 2-6. SU-14 Stand

STEP 6 The unit will be dropped in from the top. It is recommended that assistance be obtained for dropping the unit onto its cradle. The unit weighs 91 pounds. The two-slotted screws will rest in the groove provided in the post. (See Figure 2-5.)

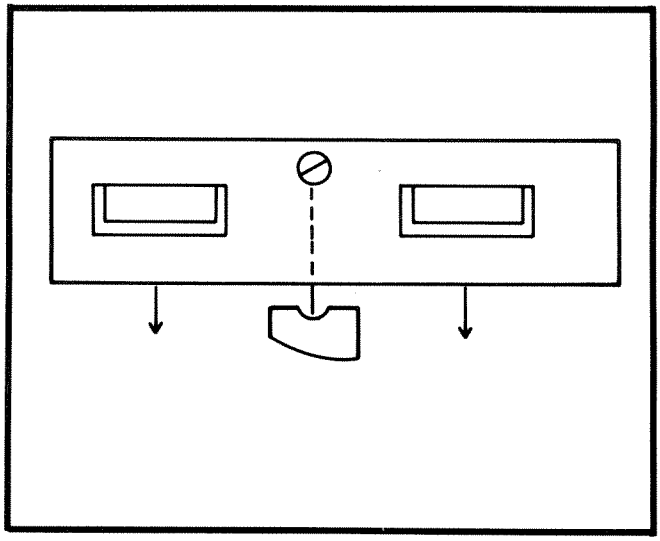

Figure 2-5. Installing Deck on Stand

CAUTION:

There are two holes into which the deck hold down knob's shaft stop will screw. These allow for two mounting angles, 0 degrees (horizontal) or 15 degrees tilt. Carefully align the deck hold down screw with the hole in the side panel of the **APR-5000**. Otherwise it will not hold the deck in the desired position and may result in cosmetic damage to the side panels.

STEP 7 When the deck is in place, turn the deck hold down knob clockwise until finger tight and replace the plastic base support covers on the post.

SECTION 3
INSTALLATION

3.1 INSTALLATION NOTES

3.1.1 Introduction

This section provides all installation information for the **APR-5000** Analog Tape Recorder. It includes a description of the rear connectors with the pin functions and the input/output signal specifications. The connectors on the rear are used for audio input and output, remote control commands, status lines, as well as control lines for tape speed in play or MVC modes. Read this information prior to connecting the **APR-5000** to power.

3.1.2 Caution Notes

Prior to connecting the AC power cord for the first time, check the following:

- Make sure that the voltage selector is set to the proper position. Failure to do so may result in damage to the tape recorder. To determine which position the power supply is set, open the rear door, the switches are visible on the back of the power supply assembly (near the take-up reel motor). Compare the positions of the switches to Figure 3-1. Reset to the appropriate voltage if necessary.

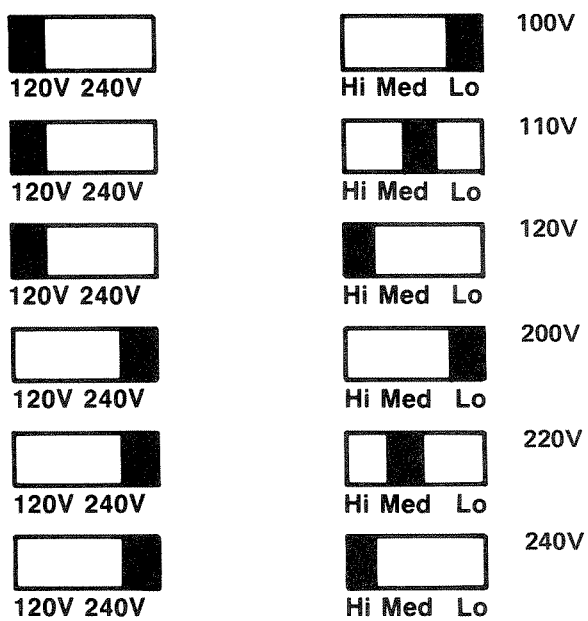

Figure 3-1. Power Supply Selector Switches

- Ensure that the power switch on the power supply is in OFF position.

- Do not attempt to connect remote control equipment or other audio equipment to the **APR-5000** prior to turning on the unit for the first time.

NOTE The voltages shown are nominal line voltages. You should verify that the power supply selector switches are set for the appropriate setting for the power service at your location. The **APR-5000** will continue to operate normally within a reasonable range of line voltage fluctuation. (See Table 3-1.)

Line Voltage Frequency	Allowable Line Voltage Deviation
60Hz	+15%, −15%
50Hz	+15%, −15%

Table 3-1. Line Voltage Deviation (Maximum)

3.1.3 Operational Environment

For best results, it is recommended that the **APR-5000** be installed in an area where it will not be exposed to direct sunlight or any other heat source. The unit should be operated in a temperature range from +5 °C to +35 °C (41 °F to 95 °F).

Good air circulation is essential to prevent internal heat build-up. Place the tape recorder where there is sufficient air circulation. Do not block the ventilation holes on the cabinet and the rear panel. If the air is stagnant in this area, a ventilation fan is suggested.

The **APR-5000** series tape machine is classified by the FCC as a Class A Computing Device under Section 15.818. The following warning information is available for the user.

WARNING:

This equipment generates, uses, and can radiate radio frequency energy. If not installed and used in

accordance with the instructions in this manual, may cause interference to radio communications. It has been tested and found to comply with the limits for Class A Computing Device pursuant to Subpart J of Part 15 of FCC Rules and Regulations, which are designed to provide reasonable protection against such interference when operated in a commercial environment.

Operation of this equipment in a residential area is likely to cause interference, in which case the user, at his own expense, will be required to take whatever measures may be required to correct the interference.

3.1.4 Operating Voltage

The **APR-5000**'s power line voltage can be set for any of six different voltage levels:

- 120V (Hi-Nominal-Low)
- 240V (Hi-Nominal-Low)

A warning sticker placed over the AC power connector on the tape recorder will inform the user of the voltage setting of the power supply when shipped from the factory. (See Figure 3-1 for definitions of the switch positions.)

3.1.5 Supplied Accessories

The following accessories are standard with the **APR-5000**:

- AC Power Cord
- Reel Platter Shims — These are the rubber reel platter covers which are installed on the metal reel platter to equalize the height of metal and plastic reels on the platter. They may be reordered under part number 3-711-185-01.
- Reel Hub Adaptors — Used for mounting NAB type reels 10½ inches or larger. Extra adaptors may be ordered under part number T-9450-121-X.
- Extender Board — The boards in the **APR-5000** amp case are connected through an edge connector on each printed circuit board. These boards are easily removed and installed. For the purpose of maintenance or troubleshooting, any of these boards can be connected through the extender board to the Audio Mother Board (ADM).
- Take-up Reel — Empty 10½ inch NAB-type metal reel.
- Blank Tape — 2400 ft. reel of tape.
- User Labels — A packet of fifty user labels are provided with the **APR-5000**. These are for use on the Alignment Control Panel and may be reordered under part number T-9452-508-X.
- Headstack Cover — This is placed on the headstack to cover the head alignment screws.
- Power Supply Fuses — Three different size fuses are provided. See Table 3-2 for fuse rating, voltage range, and part number.

Fuse Rating	Voltage Range	SONY Part Number
5A	100 V	T-9412-748-2
4A	110 V	T-9413-261-2
2A	200 V	T-9413-262-1

Table 3-2. Power Supply Fuses

3.2 REQUIRED CABLES AND CONNECTORS

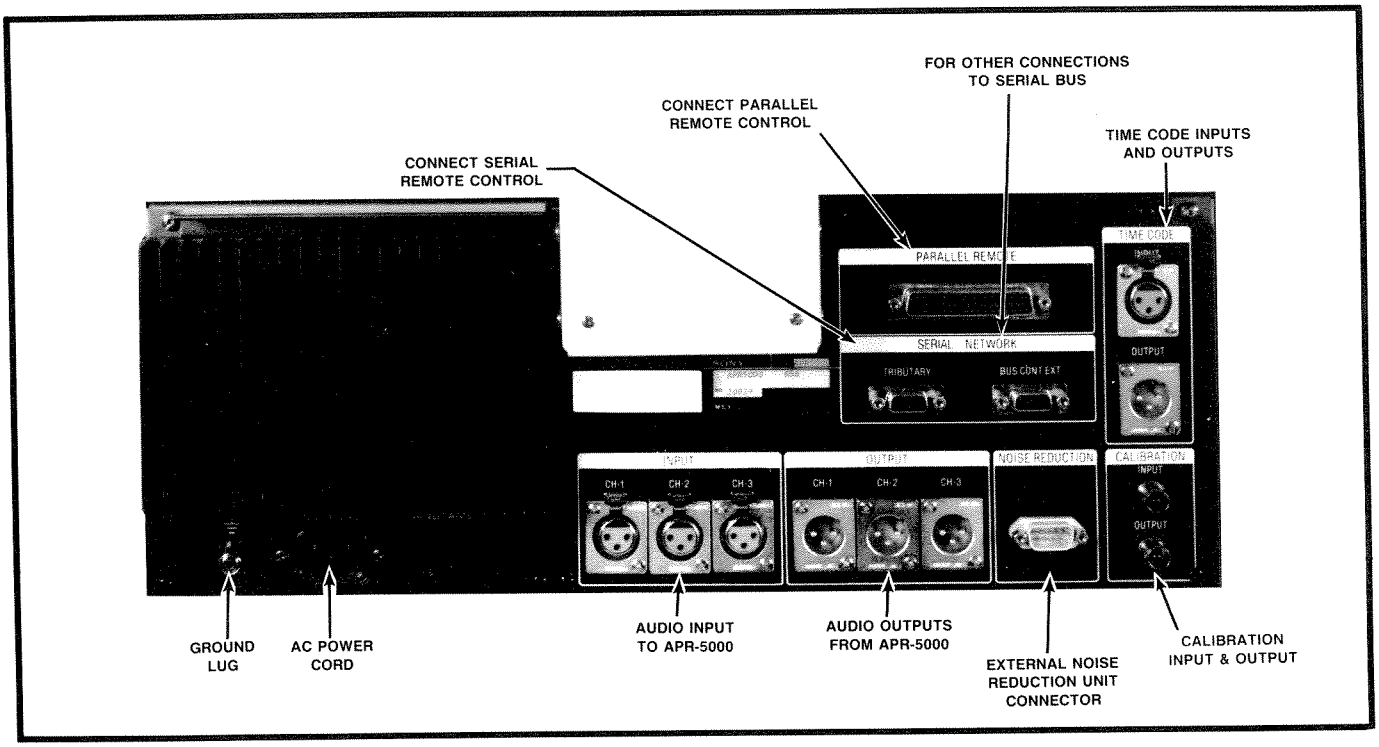

Figure 3-2. Connector Diagram

3.2.1 Description of Connections

CONNECTOR NAME	CONNECTION TO
AC POWER CONNECTION	AC Power Source. **Note:** See Section 3.1 for power supply selector switch settings.
GROUND LUG	Frame ground connection. It provides a ground connection to the chassis of the tape machine.
AUDIO INPUTS	Connect to an appropriate signal source; such as, the line out from the console or the audio output of another tape machine.
AUDIO OUTPUTS	Audio signal output connectors for each channel. These are connected to an appropriate audio input, such as a console line in or a pre-amplifier/amplifier. (See Section 3.2.3.)
NOISE REDUCTION	9 pin D-type connector. This is used to interface a noise reduction unit with the **APR-5000**. See Section 3.6 for pin-out.
CALIBRATION	BNC connectors. These will be used to connect test equipment to the **APR-5000**. One is used for input (from audio frequency generator, etc.) and the other is for output (to oscilloscope, voltmeter, etc.). (See Section 3.5.)

Table 3-3. Rear Panel Connectors

TIME CODE	Two audio connectors. These are used to input and output time code information from the **APR-5003**. This may not be the same as the audio I/O cables for Channel 3.
PARALLEL REMOTE	The 50 pin D-connector has individual pins assigned for each function and status signal of the tape machine. The pin-out is shown in Section 3.3.
SERIAL NETWORK	The two connectors are used for connecting the **APR-5000** to a serial bus. The connectors are labelled "TRIBUTARY" and "BUS CONTROL EXTENSION" so that serial communications can be daisy-chained to more than one unit. The pin-out for each one is shown in Section 3.4.

Table 3-3. Rear Panel Connectors (Continued)

3.2.2 AC Power Cord

The AC power cord is a supplied accessory. (See 3.1.1 Caution Notes). This is a standard equipment cord which connects between the wall receptacle (power source) and the rear door power connector on the **APR-5000**.

3.2.3 Audio Cabling

The audio input and audio output connectors are wired to conform to the IEC 268 standard for XLR-3 type connectors:

Pin 1	Shield
Pin 2	Signal HIGH (Hot)
Pin 3	Signal LOW (Cold)

The input impedance of the **APR-5000** is 10K ohms (balanced) and the output impedance is 120 ohms (balanced). The same XLR-3 type audio connectors are used for the Time Code Input and Output connectors. For the description of the signals at the time code I/O connectors, see Time Code Supplement.
The differential audio inputs may be used in an unbalanced configuration. This would consequently be to the detriment of common mode rejection. The differential line outputs of the audio electronics may be unbalanced by shorting either the high or low termination to audio ground. No damage to the audio output stage will occur. Should this type of operation be required, the connection to audio ground should be made at the tape machine and not at the end of a length of cable. Output level calibrations to reference levels are not guaranteed in unbalanced operation.

3.3 PARALLEL REMOTE ACCESS

The parallel remote access for the **APR-5000** is utilized through a 50 pin D-type connector. The output signals from this connector include a regulated +5 volt power source, the capstan reference frequency, and status lines. The inputs include all transport and audio commands, capstan injection frequency, and the direction command. The signals at the various pins is discussed in the sections that follow.

3.3.1 Command Lines

Parallel remote control commands can be activated when the tape machine is in LOCAL mode (or BOTH mode). The command lines TTL compatible active LOW. Each time an input is open-circuited or held to a logic HIGH level then the input will be inactive. An input is activated by applying a logic LOW level through a push button, relay closure, or a logic gate. The input may be activated momentarily for a minimum of 50 milliseconds. The command lines are optically coupled, each being internally terminated and current limiting. The command lines which operate in this way are: PLAY, RECORD, STOP, FAST FORWARD, REWIND, LOCATE, LIFTER DEFEAT, TAPE TIME RESET, and SPOOL WIND.

3.3.2 EXTERNAL MVC Input

The EXTERNAL MVC input is on pin 34. It has the multiple purpose of activating the MVC mode and also controlling the speed and direction of the MVC movement. This input must be open-circuited or held to a HIGH logic level in order that the MVC mode remains inactive. If pin 34 is held at a LOW logic level, then the MVC mode will be activated and the machine will achieve full rewind MVC movement. If a 1kHz square wave with a 50% duty cycle is applied to the input, the MVC mode will be activated but no movement of the tape will result.

The duty cycle of the input signal is varied to control the movement of the tape. To achieve maximum MVC movement in the forward direction, a 1kHz waveform with a 90% HIGH duration and a 10% LOW duration must be applied to pin 34. For maximum reverse MVC movement, a waveform with a 10% HIGH duration and a 90% LOW duration should be applied. The duty cycle may be varied with in these limits to provide the full range of MVC movement.

NOTE: When the input is held at a constant LOW level, or the HIGH pulse width is less than 100 microseconds, then the MVC mode will be activated and maximum rewind MVC movement will result.

3.3.3 EXTERNAL CAPSTAN SOURCE SELECT Input

The EXTERNAL CAPSTAN SOURCE SELECT input is on pin 36. When it is held at a LOW logic level, the capstan reference source will be derived externally from the injection frequency at pin 35. If this pin is open circuited or held at a HIGH logic level then the capstan reference signal will be derived internally.

3.3.4 EXTERNAL CAPSTAN SOURCE Input

The EXTERNAL CAPSTAN SOURCE input on pin 35 allows an external capstan reference source when enabled by pin 36 (active LOW). The center frequency of the injection frequency should be 19.2kHz for the standard speed selected on the Transport Control Panel. Changes in the frequency will result in proportional changes in the play speed. The range of the injection frequency is ±50% of the center frequency (9.6kHz to 28.8kHz) for the standard speed selected on the deck front panel (LOW, MID, HIGH).

3.3.5 RECORD READY Inputs

There are three pins which are assigned as RECORD READY inputs to each of the channels in the meter housing. These are: pin 27 for Channel 1, pin 28 for Channel 2, and pin 29 for Channel 3. When any of these pins are held at a HIGH logic level, the appropriate channel RECORD READY will be inactive and will stay at its last state. When any of the pins are held at the LOW logic level for a minimum of 100 milliseconds, the appropriate channel will toggle from SAFE to RECORD READY or from RECORD READY to SAFE. In order to toggle the RECORD READY mode, a high-to-low transition must again take place (accompanied by a low duration of at least 100 msec).

3.3.6 TAPE DIRECTION and TAPE TACHOMETER Inputs

There are two inputs on the 50 pin connector which allow for the external input of TAPE DIRECTION (pin 37) information and a TAPE TACHOMETER signal (pin 38). The TAPE DIRECTION input is in the same array as the command lines (see Section 3.3.1). The TAPE TACHOMETER signal is also optically coupled, TTL compatible level. When the signal at this pin is 240Hz the machine will shuttle at the rate of 15 ips. At this time, there is no software installed to support these two inputs.

3.3.7 FADER START and FADER START ENABLE Inputs

There are two input pins on the 50 pin connector which are called FADER START (pin 42) and FADER START ENABLE (pin 40). These pins form a two bit logic array providing control over such machine functions such as PLAY, STOP, and GLOBAL DIM. The input at these pins will override other parallel command inputs or any Transport Control panel buttons unless it is set to the inactive state with both pins held at a HIGH logic level or open-circuited. The logic for these two pins is shown on Table 3-4.

FADER START ENABLE PIN 40	FADER START PIN 42	MODE OF OPERATION
High	High	Inactive
High	Low	GLOBAL DIM
Low	High	STOP
Low	Low	PLAY

Table 3-4. FADER START/FADER START ENABLE Logic

3.3.8 Status Lines

The outputs, which are active LOW as well, are buffered TTL levels capable of driving up to 20 LS-TTL loads or 5 TTL loads. The outputs will remain at the LOW logic level for as long as the mode is active, regardless of where the command to enter the mode was initiated and also regardless as to whether the LOCAL mode (or BOTH mode) is enabled. These status lines include: LIFTER DEFEAT, EXTERNAL SOURCE SELECT, SPOOL WIND, LOCATE, REWIND, FAST FORWARD, PLAY, RECORD, and STOP. There are three other sets of status lines for which there is one for each of the three channels. These are: RECORD READY, RECORD BIAS OFF, and ERASE OFF.

3.3.9 CAPSTAN REFERENCE Output

The CAPSTAN REFERENCE output signal is on pin 10 of the 50 pin connector. This signal is the buffered capstan reference signal which is used to control the capstan play speed. The center frequency of the signal at pin 10 will be 19.2kHz at standard speed and the range will be ±50% of center frequency. Changes in the play speed will result in a proportional change in the frequency of the CAPSTAN REFERENCE signal.

3.3.10 TAPE DIRECTION Output

The TAPE DIRECTION output on pin 12 provides an indication of which direction the tape is moving. When the tape is moving in a reverse (rewind) direction, pin 12 will be at a HIGH logic level. When the tape is moving in the forward (play) direction then there will be a LOW logic level at pin 12. When the machine is stopped pin 12 will indicate the direction of the last motion.

3.3.11 TAPE TACHOMETER Output

The TAPE TACHOMETER output on pin 13 provides an external roller guide counter pulse. These pulses are derived from the roller guide which is between the flutter dampening arm and the headstack assembly. Pin 13 will have a center frequency of 240Hz when the machine is playing at 15 ips. The frequency will proportionally change to 480Hz if the play speed is increased to 30 ips.

3.3.12 Meter Outputs

There is another set of three outputs from the 50 pin connector which are used for external meter feeds. There are Meter 1 for Channel 1 (pin 2), Meter 2 for Channel 2 (pin 3), and Meter 3 for Channel 3 (pin 4). These are DC voltage levels which can be used to drive a VU meter. The voltages are referenced to Meter Ground on pin 1.

3.3.13 Parallel Remote Access Pin-Out

1. Shield/Meter Ground	26. Record Ready Ground
2. Meter 1	27. Record Ready 1 Command
3. Meter 2	28. Record Ready 2 Command
4. Meter 3	29. Record Ready 3 Command
5. ERASE OFF 1 Status	30. Record BIAS OFF 1 Status
6. ERASE OFF 2 Status	31. Record BIAS OFF 2 Status
7. ERASE OFF 3 Status	32. Record BIAS OFF 3 Status
8. $\overline{\text{LIFTER DEFEAT}}$ Status	33. $\overline{\text{LIFTER DEFEAT}}$ Command
9. $\overline{\text{MVC}}$ Status	34. MVC Command
10. Capstan Reference Output	35. External Capstan Source
11. Capstan Source Status	36. External Source Select Command
12. TAPE DIRECTION Output	37. External Tape Direction Input

Table 3-5. Command/Status Signals

13. TAPE TACHOMETER Output	38. External Tape Tachometer Input
14. $\overline{\text{SPOOL WIND}}$ Status	39. $\overline{\text{SPOOL WIND}}$ Command
15. $\overline{\text{RECORD READY}}$ 1 Status	40. $\overline{\text{FDR START ENABLE}}$ Command
16. $\overline{\text{RECORD READY}}$ 2 Status	41. $\overline{\text{TAPE TIME CLEAR}}$ Command
17. $\overline{\text{RECORD READY}}$ 3 Status	42. $\overline{\text{FDR START}}$ Command
18. $\overline{\text{LOCATE}}$ Status	43. $\overline{\text{LOCATE}}$ Command
19. $\overline{\text{REWIND}}$ Status	44. $\overline{\text{REWIND}}$ Command
20. $\overline{\text{FAST FORWARD}}$ Status	45. $\overline{\text{FAST FORWARD}}$ Command
21. $\overline{\text{PLAY}}$ Status	46. $\overline{\text{PLAY}}$ Command
22. $\overline{\text{RECORD}}$ Status	47. $\overline{\text{RECORD}}$ Command
23. $\overline{\text{STOP}}$ Status	48. $\overline{\text{STOP}}$ Command
24. Remote Ground	49. Remote +5V (0.5A Total)
25. Remote Ground	50. Remote +5V (0.5A Total)

Table 3-5. Command/Status Signals (Continued)

3.4 SERIAL REMOTE ACCESS

Serial communication is achieved through one of two 9 pin D-type connectors (CNJ801/CNJ802). Communication is full-duplex in the differential RS-422 format.

TRIBUTARY CNJ 801	BUS CONTROL CNJ 802
1. Frame Ground	1. Frame Ground
2. TA	2. RA
3. RB	3. TB
4. RC	4. TC
5. SP	5. SP
6. TC	6. RC
7. TB	7. RB
8. RA	8. TA
9. Frame Ground	9. Frame Ground

Table 3-6. Serial Network (9 Pin D-Type Connector)

These two ports are intended for a variety of serial control protocols. Their architecture is particularly chosen for upward compatibility to developing SMPTE/EBU networking protocols or Sony 9-pin Serial protocols in the future. The SMPTE/EBU protocol has not been fully established. For additional information on this proposed standard, the following documents can be obtained from the SMPTE organization.

SMPTE Doc.PH22.207M
Electromechanical Characteristics for Digital Control Interface.
SMPTE Doc.RP113
Supervisory Protocol for Digital Control Interface.
RPXXX(Doc.3)
Tributary Interconnection.
RPXXX(Doc.4)
Control Message Architecture.
Doc. ZZZ
System Service and Common Messages

3.5 CALIBRATION CONNECTORS

For connecting test equipment to the audio system during alignment calibration BNC-type connectors are used.

Outside of Connector	Low (ground)
Center pin	High (signal)

Table 3-7. BNC Connector Wiring

These connectors are used for connecting test equipment to the **APR-5000** to use when calibrating or adjusting the unit. The CALIBRATION IN connector is used for slating oscillators, function generators, etc. to the desired audio (or time code) tracks. The CALIBRATION OUT connector is compatible with all types of measurement equipment such as oscilloscopes, voltmeters or digital multitesters. Using these connectors eliminates the need of connecting and disconnection of test equipment when preparing for calibration and during the alignment process.

3.6 NOISE REDUCTION CONNECTOR

This is a 9 pin D-type connector used to interface an external noise reduction unit with the **APR-5000**.

Pin	Connector Shield
1	Shield
2	Noise Reduction Ground 1
3	Noise Reduction Ground 2
4	Noise Reduction Ground 3
5	No Connection
6	Noise Reduction Relay 1
7	Noise Reduction Relay 2
8	Noise Reduction Relay 3
9	No Connection

Table 3-8. Noise Reduction Unit Connector Wiring

These pins simply provide an opto-isolated closure for each channel. (See Figure 3-3.) There is normally an open connection between the pins, but when channels enter the RECORD or INPUT modes, the opto-isolator conducts causing a current path between the NOISE REDUCTION RELAY and NOISE REDUCTION GROUND pins providing an active LOW enable to the noise reduction unit.

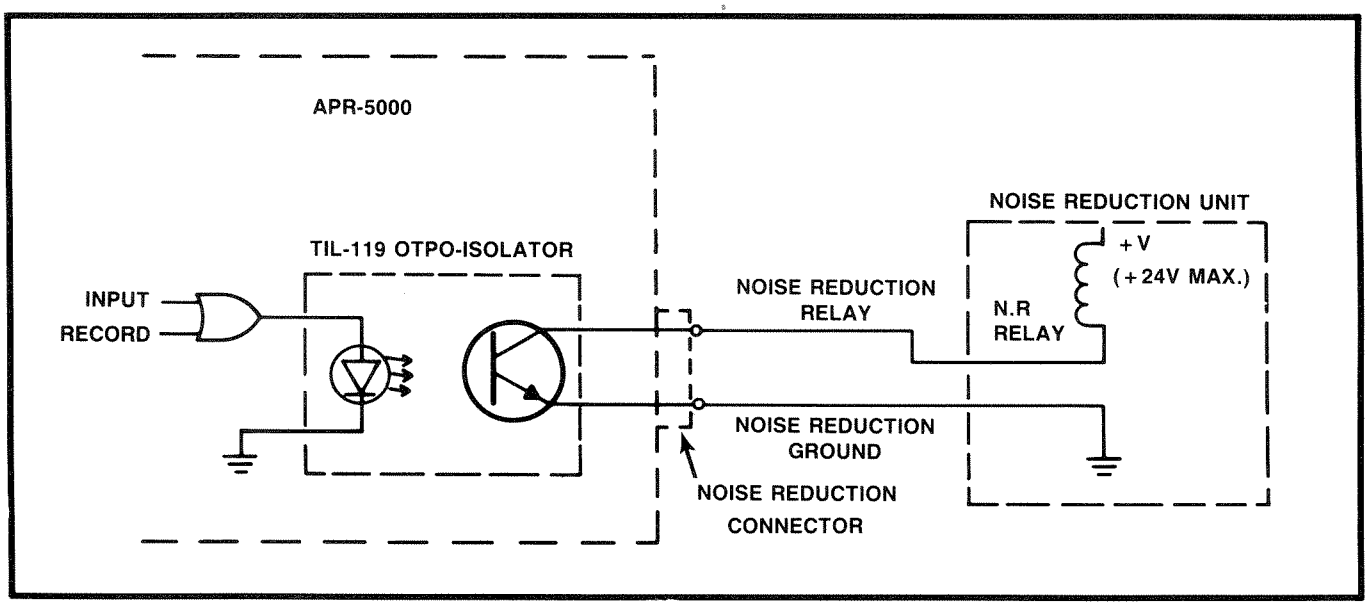

Figure 3-3. Noise Reduction Logic

3.7 INPUT/OUTPUT SIGNALS

Input and output signals of the main connectors on the connector panel are as follows:

INPUT

AC POWER NOMINAL VOLTAGE	100V, 110V, 120V, 200V, 220V, 240V
AC LINE FREQUENCY	50Hz or 60Hz
MAXIMUM AC LINE VOLTAGE DEVIATION	+15%, −15% at 50Hz +15%, −15% at 60Hz
AUDIO IN	+4dBu, 10K ohms/600 ohms balanced
TIME CODE IN	−6dBu ±6dB, 10K ohms, balanced or unbalanced (0dBu=0.778VRMS)
PARALLEL REMOTE CONTROL COMMANDS	TTL compatible, 2-5V is OFF (HIGH) 0-1V is ON (LOW)
CALIBRATION IN	Unbalanced, +4dBu nominal (0dBu=0.778VRMS)
CAPSTAN INJECT FREQUENCY	19.2kHz at standard speed 9.6kHz at 50% below standard speed 28.8kHz at 50% above standard speed

Table 3-9. Input Signals

OUTPUT

AUDIO OUT	+4dBu, low impedance,balanced (600 ohm load permissible)
TIME CODE OUT	−6dBu ±3dB, low impedance, balanced
REMOTE STATUS	TTL compatible, 2-5V is OFF (HIGH), 0-1V is ON (LOW). Current sink capability: 12mA at 0.4V, 24mA at 0.5V
CALIBRATION OUT	Unbalanced, +4dBu nominal (0dBu=0.778VRMS)
HEADPHONES	8 ohm load, or greater, binaural
EXTERNAL NOISE REDUCTION RELAY SUPPLY	24 volts maximum. Maximum saturation current: 100mA at 24V
TAPE TACHOMETER	480Hz at 30 ips, 240Hz at 15 ips
REMOTE POWER SUPPLY	Regulated +5 VDC 0.5 amps maximum

Table 3-10. Output Signals

3.8 SYSTEM OPERATION CHECK LIST

It is recommended that the following functions should be checked when the machine is first powered on. These functions should also be checked whenever performing maintenance or repair on the **APR-5000**. The check procedure described here is designed to be checked from the **APR-5000** itself, but can be applied to operation with a remote control. It is recommended that if a problem arises when executing the procedure with the remote control connected that power be turned off and the remote control removed to check the **APR-5000** alone.

3.8.1 Transport Functions

STEP 1 Connect the **APR-5000** to an appropriate AC power source.

STEP 2 Turn the power switch on and check the following:

CHECKOUT PLACE	CHECKOUT ITEM
Reel Motors	The solenoid engages and the brake is released.

CHECKOUT PLACE	CHECKOUT ITEM
Alignment Control Panel (ALN)	All LEDs off in the Status Display, REPRO section, SYNC section, RECORD section, BIAS section, Track Selector, Calibration section, INPUT section and the CONTROL button. One of the three PRESET buttons will be illuminated and one of the three SPEED buttons will also be illuminated. All the other LEDs will be turned off.
Transport Control Panel	TAPE TIME and LOCATE TIME displays will have a single zero lit. One of the SPEED LEDs and the LOCAL button will be illuminated. The STOP button will also be illuminated. All other LEDs will be turned off.
Meter Housing	The lamps which light the meters will be turned on and the REPRO button will illuminate. All other LEDs will be turned off.
Power Supply	Look through the air vents on the front of the power supply and make sure the LED on the CSL is illuminated.

STEP 3 Press each of the following buttons on the Transport Control Panel and observe that the appropriate displays are illuminated.

PRESS	OBSERVE
1 2 3 4 5 6	The LOCATE TIME display should read: 12.34.56. - -
↑	The TAPE TIME display becomes the same as the LOCATE TIME display.
R **on the LOCATE TIME display**	The LOCATE TIME display resets to zero.
↓	The LOCATE TIME display becomes the same as the TAPE TIME display.
R **on the TAPE TIME display**	The TAPE TIME display resets to zero.
STO 0 1	The LOCATE TIME display reads "01" for about 1 second and then returns to 12.34.56. - -

PRESS	OBSERVE
R on the LOCATE TIME display	The LOCATE TIME display resets to zero.
RCL 0 1	The LOCATE TIME display reads "01" for about 1 second and then returns to 12.34.56. - -

STEP 4 Turn the power off for 5 seconds then turn it on again.

STEP 5 To check the transport functions of the **APR-5000** it will be necessary to use a work tape and an empty take-up reel. Mount the empty take-up reel on the right-hand (take-up) reel motor and mount the work tape on the left-hand (supply) reel motor (see Section 5.1.2 Threading Tape).

STEP 6 All of the following buttons are located on the Transport Control Panel. Observe the displays on the Transport Control Panel and the actions of the transport.

Perform the following actions or press the appropriate buttons as they are indicated:

ACTION	RESULT
Thread the tape	When the End of Tape sensor is broken (located beneath the headstack assembly) the reel motors turn on and there is tension on the tape.
F FWD	The STOP button extinguishes and the FFWD button will illuminate. The tape lifters engage removing the tape from the heads. The tape winds from the supply to the take-up reel.
LIFTER DEFEAT	The button illuminates to indicate that lifter defeat is selected. Note that the lifters withdraw and the tape is shuttled across the heads.
LIFTER DEFEAT **again**	The lifters will engage and the tape will be removed from the heads. The LIFTER DEFEAT button extinguishes.
Touch the MVC knob	The MVC indicator LED illuminates and the transport enters SPOOL mode and the wind speed is reduced to approximately 1.9 meters per second.
PLAY	The MVC indicator LED and the FFWD button will extinguish. The tape lifters withdraw and the transport enters PLAY mode. The PLAY button is illuminated.
SHIELD DEFEAT	Note that the shield withdraws to the down position and the button illuminates.

Perform the following actions or press the appropriate buttons as they are indicated:

ACTION	RESULT
SHIELD DEFEAT again	The button extinguishes and the shield comes up.
REWIND	The transport enters FAST REWIND mode immediately. The button illuminates and tape is shuttled from the take-up reel to the supply reel.
STOP	The transport will STOP and the **STOP** button will illuminate. The **REW** button will extinguish.
EDIT	The **STOP** button extinguishes and tensions will be released on both reel motors and the **EDIT** button will illuminate.
PLAY	The transport enter the DUMP EDIT mode, where the capstan motor is enabled, the pinch roller engages but the take-up motor is turned off causing the tape to be played across the head and dumped off the right side of the machine.
STOP	Tape tension will be restored the **STOP** button will illuminate for a second, the EDIT button remains illuminated. Guide the tape onto the reels. When the tape is properly threaded across the EOT sensor. Press the **STOP** button again, it will illuminate and the EDIT button will extinguish.
Touch the MVC knob (no movement)	The **STOP** button will be extinguished. The MVC indicator LED will illuminate. The tape will not move unless the knob is moved to either side.
Move the MVC knob to the extreme right	Maximum forward MVC movement will result.
Slowly move the MVC knob back to center	Movement of the tape will be related to the movement of the knob. The closer to the center, the slower the movement of the tape.
Move the MVC knob to the extreme left	Maximum rewind MVC movement will result.

Perform the following actions or press the appropriate buttons as they are indicated:

ACTION	RESULT
Move the knob between extreme left and center	Slow rewind MVC movement will result.
Release the knob	The knob will mechanically self-center and the transport will go to the STOP mode.
TAPE TIME reset R button	The TAPE TIME display reads zero.
SPEED	The PLAY button will extinguish and the STOP button will illuminate. The transport enters STOP mode. The LOW SPEED indicator LED illuminates and the HI SPEED indicator LED extinguishes.
1 2 3	The LOCATE TIME display will read "1.23".
LOCATE	The LOCATE and FFWD buttons will illuminate and the STOP button extinguishes. When the TAPE TIME display reaches "1.23" the transport will enter STOP mode with the STOP button illuminated. The LOCATE and FWD buttons extinguish and both displays read "1.23".
LOCATE TIME reset (R button)	The LOCATE TIME display reads zero.
LOCATE **then** PLAY	The LOCATE, REW, and PLAY buttons will illuminate. The STOP button extinguishes and the tape shuttles in the rewind direction until the TAPE TIME display reads "0". The LOCATE, and REW LEDs extinguish and the machine enters PLAY mode.
VARI	The VARI button will begin to flash indicating that the VARI-SPEED PROGRAM mode is enabled. This does not cause the play speed to change.
5 0 0	The LOCATE TIME display will read "50.00". The right-most zero is automatically displayed.
VARI	The VARI button will illuminate and the play speed will be increased.

Perform the following actions or press the appropriate buttons as they are indicated:

ACTION	RESULT
Move the MVC knob to the extreme left	The number on the LOCATE TIME display will begin to change and will stop when the display reads "–50.00". The play speed will be reduced.
Move the MVC knob to the extreme right	The number in the LOCATE TIME display will begin to change and will stop when the display reads "50.00". The play speed will be increased.
SPEED	The PLAY button will extinguish and the STOP button will illuminate. The transport enters STOP mode. The MID SPEED indicator LED illuminates and the LOW SPEED indicator LED extinguishes.
VARI	The VARI button will extinguish and the LOCATE TIME display will reset to "0".
TAPE TIME reset (R button)	The TAPE TIME display reads zero.
5 STO 2 9	The LOCATE TIME display will read "5" then "29' for a second then "5" again. The number "5" is stored in memory location 29.
+/– STO 2 8	The LOCATE TIME display will read "–5" then '28" for a second, then "–5" again. The number "–5" is stored in memory location 28.
REPEAT	The REPEAT, LOCATE, REW, and PLAY buttons will illuminate (alternately) as each function is performed. The transport shuttles in the rewind direction until the TAPE TIME display reads "–5" then the REW and LOCATE buttons will extinguish and the transport enters PLAY mode. When the TAPE TIME display reads "5", the LOCATE and REW buttons will illuminate and the transport enters LOCATE mode and recycles.
STOP	The STOP button will illuminate. The transport enters STOP mode.

3.8.2 Alignment Control Panel

STEP 1 Open the Alignment Control Panel (ALN) door. Press the ALL button and the Status Display now reads "All" and the ALL button will be illuminated.

STEP 2 Press the REPRO LEVEL and it will illuminate. The other displays on the ALN are unaffected. On the Meter Housing the ALN SELECTED LEDs and the MONITOR REPRO buttons will illuminate.

STEP 3 Press the H.FREQ button (next to the illuminated LEVEL button). It will illuminate and the LEVEL button will extinguish. The displays on the Meter Housing are unaffected.

STEP 4 Press the L.FREQ button (next to the illuminated H.FREQ button). It will illuminate and the H.FREQ button will extinguish. The displays on the Meter Housing are unaffected.

STEP 5 Press the SYNC LEVEL button and it will illuminate. The REPRO L.FREQ button will extinguish. The other displays on the ALN are unaffected. On the Meter Housing the MONITOR SYNC buttons will illuminate and the MONITOR REPRO buttons will extinguish.

STEP 6 Repeat Steps 3 and 4 for the buttons in the SYNC section of the ALN.

STEP 7 Press the INPUT MON LVL button and it will illuminate. The SYNC L.FREQ button will extinguish. The other displays on the ALN are unaffected. On the Meter Housing the MONITOR INPUT buttons will illuminate and the MONITOR SYNC buttons will extinguish.

STEP 8 Press the RECORD LEVEL button and it will illuminate. The INPUT MON LVL button will extinguish. The other displays on the ALN are unaffected. On the Meter Housing the MONITOR REPRO and the RECORD READY buttons will illuminate and the MONITOR INPUT buttons will extinguish.

STEP 9 Press the RECORD H.FREQ button and it will illuminate. The RECORD LEVEL button will extinguish. The other displays on the ALN and on the Meter Housing are unaffected.

STEP 10 Press the BIAS LEVEL button and it will illuminate. The RECORD H.FREQ button will extinguish. The other displays on the ALN and on the Meter Housing are unaffected.

STEP 11 Check the EQ STD buttons, pressing the button which is not illuminated (NAB or IEC). The button will illuminate and the other button will extinguish. The other displays on the ALN and on the Meter Housing are unaffected.

STEP 12 Repeat Step 11.

STEP 13 Press the HI SPEED button and verify that the button illuminates and that the appropriate SPEED Indicator LED on the Transport Control Panel illuminates.

STEP 14 Repeat Step 13 using the MID SPEED button.

STEP 15 Repeat Step 13 using the LOW SPEED button.

STEP 16 Press the TRACK IND button. The button will illuminate and the ALL button will extinguish. The Status Display now reads "1". The ALN SELECTED LED is illuminated for Channel 1. The other ALN SELECTED LEDs are extinguished. If using the APR-5001, skip Steps 17 and 18.

STEP 17 Press the IND button again. The button will remain illuminated and the Status Display now reads "2". The ALN SELECTED LED is illuminated for Channel 2 only. If using the APR-5002, skip Step 18.

STEP 18 Press the IND button again. The button will remain illuminated and the Status Display now reads "3". The ALN SELECTED LED is illuminated for Channel 3 only.

STEP 19 Press the IND button again. The button will extinguish and the Status Display becomes blank (no display). All of the ALN SELECTED LEDs on the meter housing are extinguished.

STEP 20 Press the IND button. The Status Display now reads "1" again. The ALN SELECTED LED is illuminated for Channel 1. The other ALN SELECTED LEDs are extinguished.

STEP 21 Check the following alignment calibration functions:

PRESS THE FOLLOWING BUTTON:	RESULT:
REPRO LEVEL button	Two alpha-numeric characters will appear on the Status Display representing a hexadecimal value. Both decimal points will be illuminated.
CALIBRATION INC button	The INC button will illuminate and the alphanumeric characters will begin to change on the Status Display.
INC button again while the display is still changing	The INC button will extinguish and the Status Display will stop changing. The hexadecimal value of the status will be greater than before the INC button was pressed.
INC button again	The INC button illuminates and the Status Display starts changing until the value "F.F." is reached. Then the INC button extinguishes.
DEC button	The DEC button illuminates and the Status Display starts to change.
DEC button again while the display is still changing	The DEC button will extinguish and the Status Display will stop changing. The hexadecimal value of the Status Display will be less than before the DEC button was pressed.
DEC button again	The DEC button illuminates and the Status Display starts changing until the value "0.0." is reached. Then the DEC button extinguishes.

STEP 22 Press the HI SPEED , IEC , and the ALL buttons. The buttons will illuminate and the status display will read "ALL".

STEP 23 Depress the CONTROL button and then press STORE (while still holding the CONTROL button depressed). The STORE button will illuminate.

STEP 24 Press the PRESET 1 button. The button will illuminate and the STORE button will extinguish.

STEP 25 Repeat Step 23 then press the PRESET 2 button. The button will illuminate and the STORE and PRESET 1 button will extinguish.

STEP 26 Repeat Step 23 then press the PRESET 3 button. The button will illuminate and the STORE and PRESET 2 button will extinguish.

STEP 27 Press the ALL , MID SPEED , and the NAB buttons. Repeat Steps 23 through 26.

STEP 28 Press the ALL , LOW SPEED , and the IEC buttons. Repeat Steps 23 through 26.

STEP 29 Turn the machine power switch off for at least five seconds.

STEP 30 Turn the power switch on and observe the machine powers up in low speed indicated by the appropriate LED on the Transport Control Panel and the illuminated button on the ALN.

STEP 31 Check for the following conditions.

NOTE: Make sure that no error codes appear in the Status Display at any time during this test.

SECTION OF ALN	PRESS	OBSERVE
SPEED SELECTOR	HI SPEED	The HI SPEED , IEC , and PRESET 3 buttons are illuminated.
PRESET MEMORY	PRESET 2	PRESET 3 button extinguishes and PRESET 2 illuminates.
PRESET MEMORY	PRESET 1	PRESET 2 button extinguishes and PRESET 3 illuminates.
PRESET MEMORY	MID SPEED	MID SPEED , NAB ,and PRESET 3 buttons illuminate.
PRESET MEMORY	PRESET 1	PRESET 3 button extinguishes and PRESET 1 illuminates.
PRESET MEMORY	PRESET 2	PRESET 1 button extinguishes and PRESET 2 illuminates.
PRESET MEMORY	PRESET 3	PRESET 2 button extinguishes and PRESET 3 illuminates.
SPEED SELECTOR	LOW SPEED	LOW SPEED , IEC , and PRESET 3 buttons illuminate.
PRESET MEMORY	PRESET 1	PRESET 3 button extinguishes and PRESET 1 illuminates.
PRESET MEMORY	PRESET 2	PRESET 1 button extinguishes and PRESET 2 illuminates.
PRESET MEMORY	PRESET 3	PRESET 2 button extinguishes and PRESET 3 illuminates.

3.8.3 Audio Functions

STEP 1 Check the buttons on the monitor speaker assembly. Check that pressing each button the first time causes it to illuminate and pressing it again causes it to extinguish. The buttons are labeled TRK 1 and TRK 2 .

STEP 2 Check these functions for each audio channel:

PRESS THE FOLLOWING BUTTONS	RESULT:
READY , RECORD UNCAL and OUTPUT UNCAL	Check that pressing each button the first time causes it to illuminate and pressing it again causes it to extinguish.
SYNC	The SYNC button illuminates and the REPRO button extinguishes.
INPUT	The INPUT button illuminates and the SYNC button extinguishes.
REPRO	The REPRO button illuminates and the INPUT button extinguishes.

STEP 3 Connect audio inputs and outputs to adequate source (See Section 3, Installation, for the audio input and audio output signal specifications).

STEP 4 Connect an audio monitor.

STEP 5 Check the following procedure for Meter Housing Controls.

PRESS THE FOLLOWING BUTTONS	RESULT:
REPRO for each channel in the meter housing	The button will illuminate to indicate that the channel is in REPRODUCE mode.
INPUT for each channel	The REPRO button will extinguish and the INPUT button will illuminate to indicate that the channel is in the INPUT mode.
SYNC for each channel	The SYNC button will illuminate to indicate that the channel is in SYNC mode.
Alternately press between REPRO and SYNC	Listen for the cue/rep relay on the FEX assembly located behind the headstack. Repeat for all channels. Leave the channel in SYNC mode (SYNC button illuminated).
RECORD READY for each channel	When the button is illuminated, the channel is in RECORD READY mode. When the button is extinguished, the channel is in SAFE mode. Set all channels to RECORD READY mode.

PRESS THE FOLLOWING BUTTONS	RESULT:
PLAY	Machine will enter PLAY mode. Notice that the BIAS and ERASE LEDs for each channel are not illuminated.
RECORD	All of the BIAS and ERASE LEDs are now illuminated to indicate the bias and erase signals are operating and the channel is in the RECORD mode. The INPUT button for each channel will illuminate.
STOP	The transport will enter STOP mode. The BIAS and ERASE LEDs will extinguish. The PLAY and RECORD buttons will extinguish and the shield will withdraw.
SPOT ERASE	The SPOT ERASE button will illuminate to indicate that SPOT ERASE mode is enabled.
RECORD	All tensions will be released and the ERASE LEDs will illuminate. Note that the BIAS LEDs are not illuminated.
STOP	Tensions will be restored and the transport will return to STOP mode. The SPOT ERASE button will extinguish.
RECORD READY for each channel	Set all channels to SAFE mode. The RECORD READY button will not be illuminated.
RECORD	All BIAS and ERASE LEDs will be extinguished. No channel will be in RECORD mode.

3.9 METER CALIBRATION

The **APR-5000** is calibrated at the factory so that the panel meters show 0VU when the signal level is at +4dBu (0dBu = 0. 778VRMS). Should your facility require a different 0VU reference, follow this procedure.

CAUTION:

This is a panel meter calibration procedure only. It does not change the tape reference fluxivity level or the output level for Repro, Input, or Sync. The procedure for changing these alignment functions are contained in Section 6.

STEP 1 Turn the tape machine power switch to OFF. Remove Channel 1 CNL card from the amp case. Install the extender board into the amp case. Place Channel 1 CNL card onto the extender board.

STEP 2 Connect a function generator or audio frequency oscillator to the CALIBRATION IN connector on the rear door. Inject a 1kHz sine wave signal at +4dBu (0dBu = 0.778VRMS).

STEP 3 Connect an AC voltmeter to the CALIBRATION OUT connector on the rear door.

STEP 4 Press the IND button until the Status Display reads "1".

STEP 5 In the INPUT section of the ALN panel

select **MON LVL** . The Status Display will show two alphanumeric characters representing a hexadecimal code. Both decimal points will be lit. The ALN SELECTED LED and the **INPUT** button for Channel 1 on the meter housing will be illuminated.

STEP 6 If the panel meter for Channel 1 reads 0VU and the AC voltmeter reads +4dBu, then skip Step 7.

STEP 7 Press **INC** or **DEC** so that the indication on the AC voltmeter is equal to +4dBu.

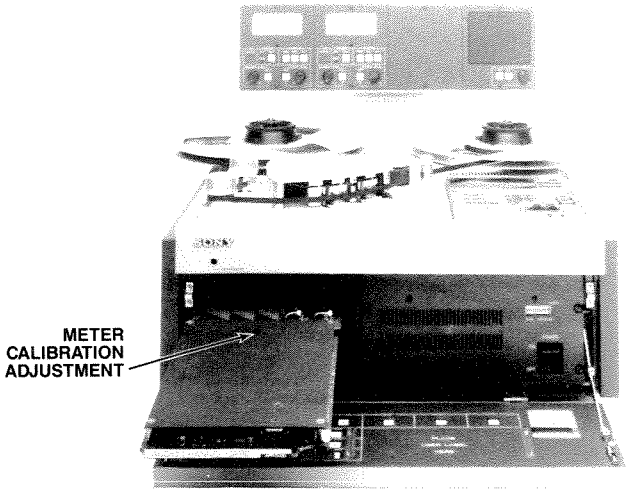

Figure 3-4. CNL Adjustments

STEP 8 On the CNL, adjust RV3 (see Figure 3-4) for the correct reading on the panel meter for Channel 1. See Table 3-11 for some of the typical 0VU reference levels.

Alternatively, you may RESET your signal generator to your desired 0VU reference level and proceed to adjust RV3 for 0VU at the panel meter.

If 0VU =	Adjust RV3 (CNL) so the panel meter reads:
+2dBu	+2VU
+4dBu	0VU
+6dBu	−2VU
+8dBu	−4VU

Table 3-11. 0VU Studio Reference

STEP 9 Turn the tape machine power switch to OFF. Remove Channel 1 CNL card from the extender board and remove the extender board from the amp case. Install Channel 1 CNL and remove Channel 2 CNL. Install the extender board into the amp case. Place Channel 2 CNL card onto the extender board.

STEP 10 Turn the power switch to ON. Press the **IND** button until the Status Display reads "2".

STEP 11 Repeat Steps 5 through 8 for Channel 2.

STEP 12 Turn the tape machine power switch to OFF. Remove Channel 2 CNL card from the extender board and remove the extender board from the amp case. Install Channel 2 CNL into the amp case.

SECTION 4
CONTROLS AND INDICATORS

4.1 OVERVIEW

This section contains an operational and functional description of all control switches and indicators on the Tape Transport, the Alignment Control Panel, and the Meter Housing.

4.2 TRANSPORT CONTROL PANEL

The basic functions of all the transport control switches and indicators of the tape transport are described in the following paragraphs. Refer to Figure 4-1. for location of each of the buttons.

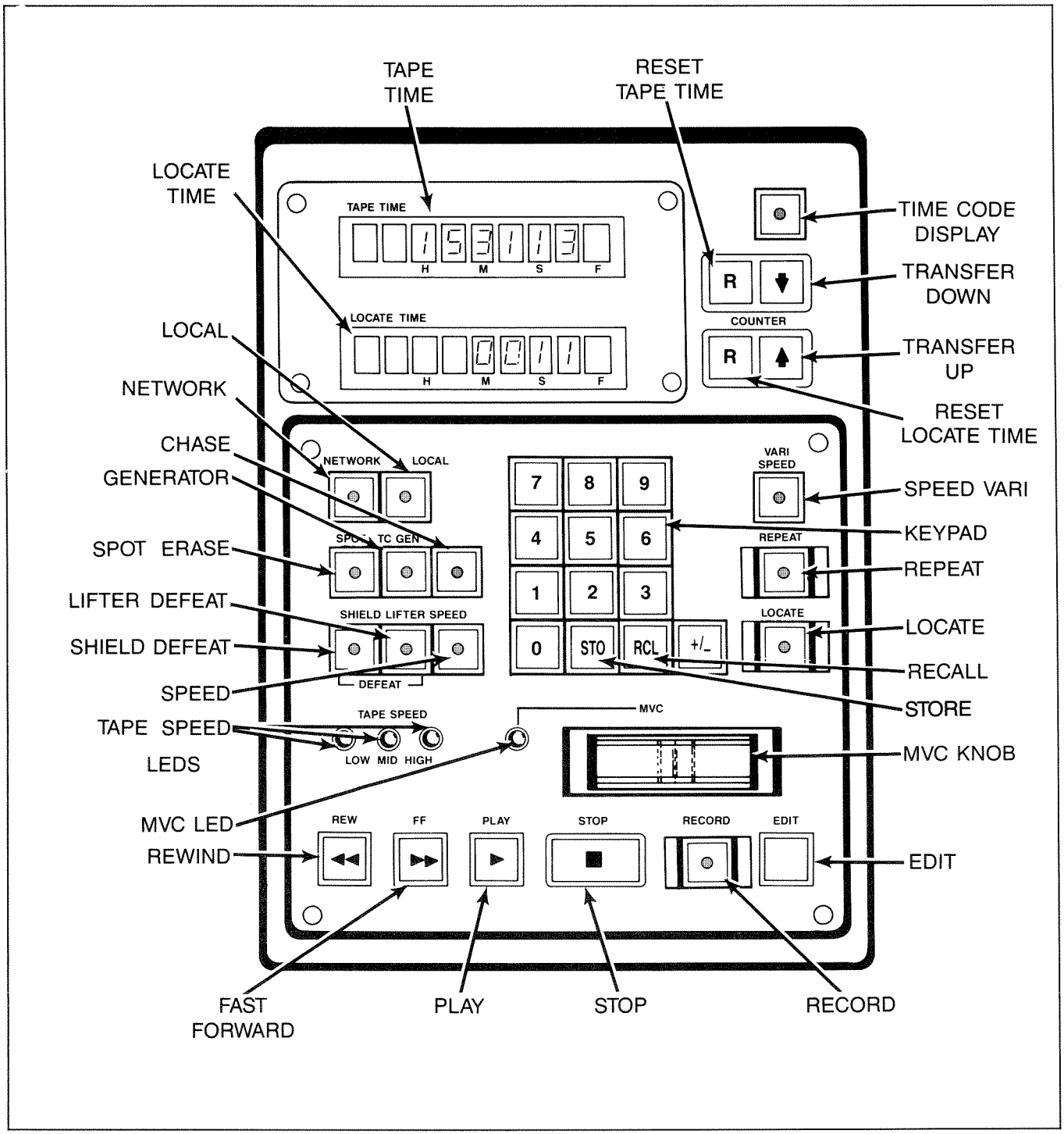

Table 4-1. Transport Control Panel

4.2.1 Functions of Buttons

REWIND

Pressing **REW** causes the transport to go into FAST REWIND mode. This cancels any previous motion command such as FAST FORWARD, PLAY or RECORD. It also causes the audio channels to be dimmed unless used in conjunction with LIFTER DEFEAT.

By touching the MVC knob during FAST REWIND mode, the transport will enter SPOOL mode and the wind speed will be reduced.

FAST FORWARD

Pressing **FF** causes the transport to enter the FAST FORWARD mode. This cancels previously selected motion commands such as REWIND, PLAY or RECORD. It also causes the audio channels to be dimmed unless the LIFTER DEFEAT is used.

By touching the MVC knob during FAST FORWARD, the transport will enter SPOOL mode and the wind speed will be reduced.

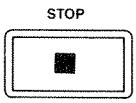

STOP

Pressing **STOP** cancels any previously selected motion command and stops the tape. When the tape is stopped by pressing **STOP** , with tape across the End of Tape (EOT) sensor, the **STOP** button will illuminate. There is a 4 ounce tension that keeps the tape on the heads and guides. This is the same amount of tension as in PLAY mode. The audio channels will be dimmed unless LIFTER DEFEAT or SHIELD DEFEAT is selected.

PLAY

Press **PLAY** to initiate the PLAY mode. This causes the tape to shuttle across the heads at the selected speed.

Variable speed selection allows the transport to play 50% over or under the standard speed.

During start-up as the transport is accelerating to play speed, the audio channels will be dimmed until play speed is achieved unless LIFTER DEFEAT is selected.

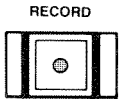

RECORD

Press the **RECORD** button together with the **PLAY** button to enter RECORD mode from STOP, FAST FORWARD or REWIND.

Press the **RECORD** button alone to enter RECORD mode from PLAY mode. All channels that are in RECORD READY will enter RECORD mode.

If no channels are in RECORD READY (all channels in SAFE) the transport will not enter the RECORD mode.

Once in RECORD mode, pressing the **RECORD** button will cause channels whose status has been changed by pressing the **READY** button to toggle.

For example, if a channel is in RECORD mode and its **READY** button is pressed, when the **RECORD** button is pressed it will drop from RECORD mode. All other channels will be unaffected. See SECTION 5, OPERATION.

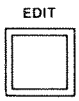

EDIT

The EDIT mode is used to facilitate the splicing and edit-assembly operations. It works in two ways, EDIT mode where all tensions are relaxed making it possible to use the splicing block and DUMP EDIT mode where the tape is played across the heads (so that it can be heard) but the take-up reel is turned off so that the tape runs off the machine into a waste container. To enter the EDIT mode from the STOP mode, press the **EDIT** button. The button illuminates and the transport enters the EDIT mode. All idle tensions are released and the reels are relaxed. When in this mode, pressing **PLAY** will cause the transport to enter the DUMP EDIT mode.

DUMP EDIT should ONLY be used if the tape has been cut and the leading edge of the tape has been dressed off of the machine to the right.

To cancel the DUMP EDIT mode press the **STOP** button and the transport will return to the EDIT mode. The EDIT mode can be cancelled by pressing the **EDIT** button or the **STOP** button.

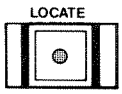

LOCATE

Pressing the **LOCATE** button causes the transport to fast wind from the location shown in the TAPE TIME display (current position) to the location shown in the LOCATE TIME display.

If the TAPE TIME is a larger number than the LOCATE TIME display, the transport will rewind from the take-up reel to the supply reel. The SPOOL mode can be entered by momentarily touching the MVC knob after entering LOCATE mode. This causes the wind speed to be reduced to approximately 1.9 meters per second.

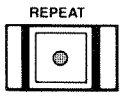

REPEAT

The REPEAT mode causes the **APR-5000** to play a segment of tape repeatedly. It is cancelled by pressing **STOP**

For programming a REPEAT function, the START time must be programmed into memory location 28 and the END time must be stored into memory location 29. The difference between the contents of memory location 29 and the contents of memory location 28 must be positive in order for the REPEAT function to work.

The specified END time must be greater than the start time. Negative numbers are permissible as long as the difference between memory location 29 and location 28 is positive.

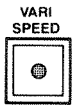

VARIABLE PLAY SPEED

Variable Play Speed control provides the ability of achieving play speed up to 50% over or under the standard play speed. It operates in three modes, OFF, VARI-SPEED, and VARI-SPEED PROGRAM.

1. OFF mode

The OFF mode disables Variable Play. This is indicated when the back lit LED on the **VARI** button is not illuminated. The capstan reference source is derived from the internal crystal.

To enter the VARI-SPEED PROGRAM mode press the **VARI** button once, it will cause the button to flash. The controls are now in VARI-SPEED PROGRAM mode.

2. VARI-SPEED PROGRAM mode

VARI-SPEED PROGRAM mode can be operated by using the numerical keypad or the MVC knob.

The percentage of deviation from standard speed (up to 50%) and the choice of playing over (+) or under (−) can be entered from the numerical keypad.

The MVC knob can be also used to change the play speed in this mode of operation (the display will indicate the percentage of deviation (±) from standard speed).

By pressing the **VARI** button again, you will enter the VARI-SPEED EXECUTE mode.

3. VARI-SPEED EXECUTE mode

The LED on the **VARI** will illuminate and the capstan reference will be switched from the internal crystal reference to a variable reference source set to provide the deviation programmed in the VARI-SPEED PROGRAM mode.

TIME CODE GENERATOR

This button selects the internal time code generator. This function can only be used on the APR-5003, Center Track Time Code machine. See TIME CODE SUPPLEMENT.

CHASE

The CHASE mode can only be used with an APR-5003, Center Track Time Code machine to slave the machine to an external time code source. See TIME CODE SUPPLEMENT.

LIFTER DEFEAT

Pressing the **LIFTER** button causes the lifters to be defeated. This disables the lifters, causing them to stay disengaged in a FAST WIND mode, such as FAST FORWARD, REWIND, LOCATE or SPOOL mode. The tape will pass over the heads. All audio channels will be undimmed. When this mode is entered, no audio channels will be dimmed by the transport.

SHIELD DEFEAT

The SHIELD DEFEAT mode is used deactivate the shields. When this button is pressed, it will light to indicate that the shield will stay down during PLAY or RECORD mode.

The audio channels will stay undimmed except during PLAY mode start-up (when machine is accelerating to play speed from stop) and PLAY mode wind-down (when the machine decelerates from play speed to stop).

SPOT ERASE

SPOT ERASE disables the record head with the erase head ON so that tape can be erased (with no bias frequency from the record circuitry). When SPOT is pressed, the button flashes to indicate that this mode is armed.

The SPOT ERASE mode can now be entered by pressing the RECORD button, if at least one channel is in RECORD READY mode. The erase head will turn on indicated by illuminated ERASE LEDs for all channels which are active.

The user can erase the desired portion of tape by passing it over the erase head. To remove the transport from SPOT ERASE mode, press the STOP button.

SPEED

User selectable between high, medium, and low speeds. Each time the button is pressed the speed will advance to the next higher speed as indicated by the HIGH, MID, and LOW indicator LEDs. The range of these speeds is selected by the headstack identification code. When the machine is powered on, the speed last used will be automatically selected.

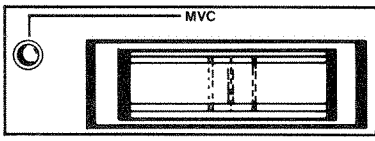

MANUAL VELOCITY CONTROL

When this knob is touched, the MVC indicator LED will light to indicate that Manual Velocity Control has been selected. The MVC knob has various functions dependent on the mode of operation.

In STOP mode, the MVC knob will cause the transport to shuttle tape dependent on the position and direction of the knob (MVC mode). Refer to Figure 4-2.

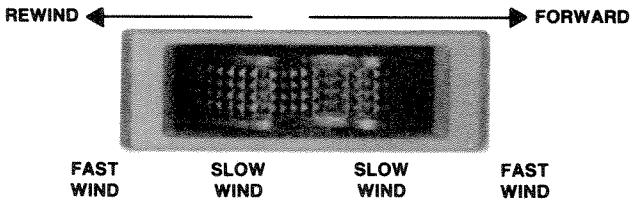

Figure 4-2. MVC Operation

When the machine is in PLAY mode, the MVC knob is not functional unless VARI-SPEED mode is also selected.

In VARI-SPEED EXECUTE mode, the MVC knob will increase the play speed of the tape machine when moved to the right and decrease the speed of the tape machine when moved to the left.

In LOCATE, FAST FORWARD or REWIND mode touching the knob will reduce the wind speed of the tape machine (SPOOL WIND).

4.2.2 Computerized Operations

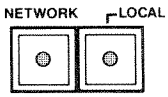

LOCAL/NETWORK INTELLIGENCE

These buttons will decide from where transport control will initiate. Each of the buttons will illuminate when active.

When in the LOCAL mode, all control is obtained from the panel buttons or from the parallel remote control.

When in the NETWORK mode, machine control will originate from the network (serial remote control) and the transport and audio controls are all disabled from the **APR-5000**. If both the LOCAL and the NETWORK buttons are lit, parallel control is available from the network and the panel button simultaneously on a first come, first served basis (BOTH mode).

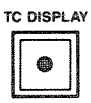

TIME CODE/ DISPLAY SELECTOR

This function can only be used on the APR-5003, Center Track Time Code machine. See TIME CODE SUPPLEMENT. In TIMER DISPLAY (DISPL) mode, the display will show hours, minutes, and seconds.

R R TAPE TIME RESET and LOCATE TIME RESET

These two buttons, located to the right of each display (TAPE TIME and LOCATE TIME), will cause the appropriate display to be reset to zero.

↑ TRANSFER REGISTER UP

The up arrow button will cause the value shown in the LOCATE TIME display to be loaded into the TAPE TIME display. The LOCATE TIME display is unaffected by this operation. The previous value of the TAPE TIME display will be erased and cannot be recalled unless previously stored in a memory location.

↓ TRANSFER REGISTER DOWN

The down arrow button will cause the value shown in the TAPE TIME display to be loaded into the LOCATE TIME display. The TAPE TIME display will be unaffected by this operation. The previous value of the LOCATE TIME display will be erased by this operation and cannot be recalled unless previously stored in a memory location.

+/- CHANGE SIGN KEY

Will change the sign (positive to negative or negative to positive) of the LOCATE TIME display used in VARI-SPEED PROGRAM mode or for the tape timer mode.

0 9 NUMERICAL KEYS

Allows the user to enter specific values to the LOCATE TIME display. Also used in conjunction with STO and RCL keys to store information to a numbered memory location. Used in VARI-SPEED PROGRAM mode to enter the percentage of deviation from standard speed.

STO STORE

This is button is used to store numbers into one of the 30 Transport Control Panel memory locations.

Pressing the STO button before a pair of numbers (from 00 to 29) will cause the information in the LOCATE TIME display to be stored in a memory location. The memory location number will be displayed momentarily on the LOCATE TIME display.

RCL RECALL

This is button is used to recall numbers from one of the 30 Transport Control Panel memory locations.

Pressing the RCL button before a pair of numbers (from 00 to 29) will cause the number in the memory location to be loaded into the LOCATE TIME display. The memory location number will be displayed momentarily on the LOCATE TIME minutes display, then the value of the memory location will be loaded into the LOCATE TIME display.

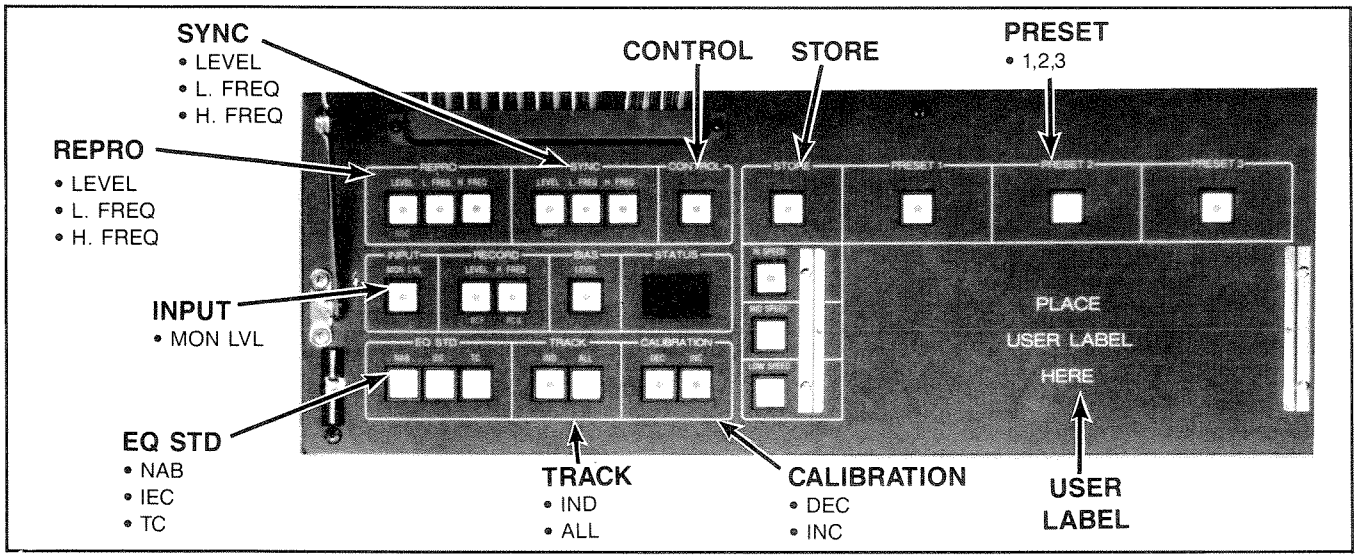

Figure 4-3. Alignment Control Panel

4.3 ALIGNMENT CONTROL PANEL

This section provides orientation to the features and the use of the Alignment Control Panel. Some of the buttons have more than one function.

4.3.1 Alignment Procedures

In general, the procedure for aligning the **APR-5000** is much the same as that for the traditional style professional analog recorder with the only difference being that an alignment parameter selection would not be made by applying an alignment tool to a trim-pot. On the **APR-5000** series recorder, normal alignment adjustments require no manual adjustment of any P.C. board adjustment trims. All parameter selection and adjustment are performed by keystroke operations. In general, the alignment procedure follows this pattern:

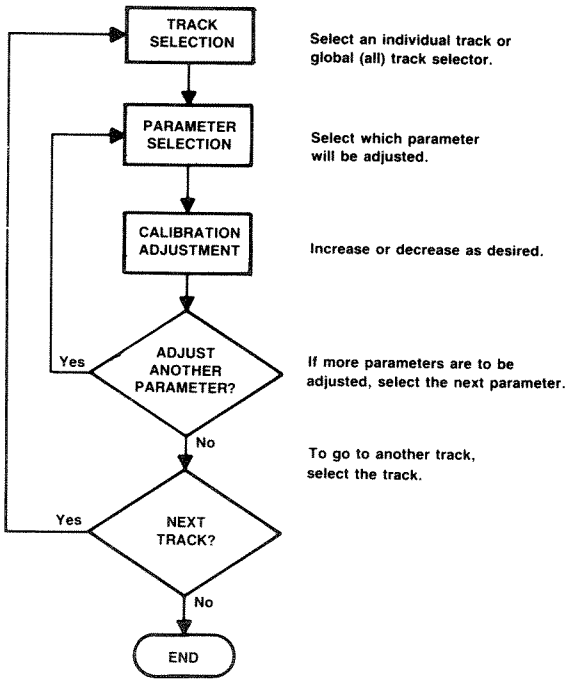

4.3.2. Track Selector

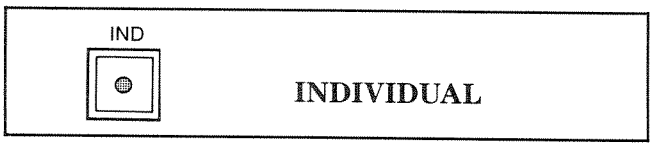

Selects the individual track selected by the user as shown on the Status Display. Pressing **IND** will advance selection to the next track as indicated on the Status Display.

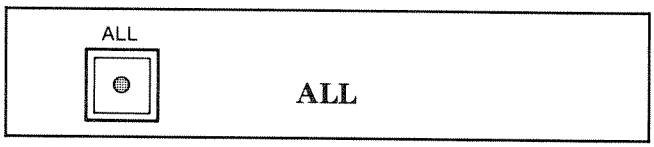

The global command which selects all audio tracks to be set with the exception of the time code track.

4.3.3. Parameter Selection

There are ten basic parameters that require adjustment in a normal alignment cycle of an analog recorder. Selection of each of these audio alignment parameters is provided by the buttons illustrated in Figure 4-5.

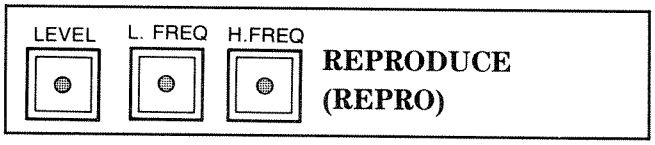

All buttons in this section will concern calibration to the reproduce circuitry.

LEVEL This is the REPRO GAIN CONTROL selecting the REPRO MONITOR output level to be calibrated.

L.FREQ. This selects the Low Frequency equalization adjustment for the reproduce circuitry to be calibrated.

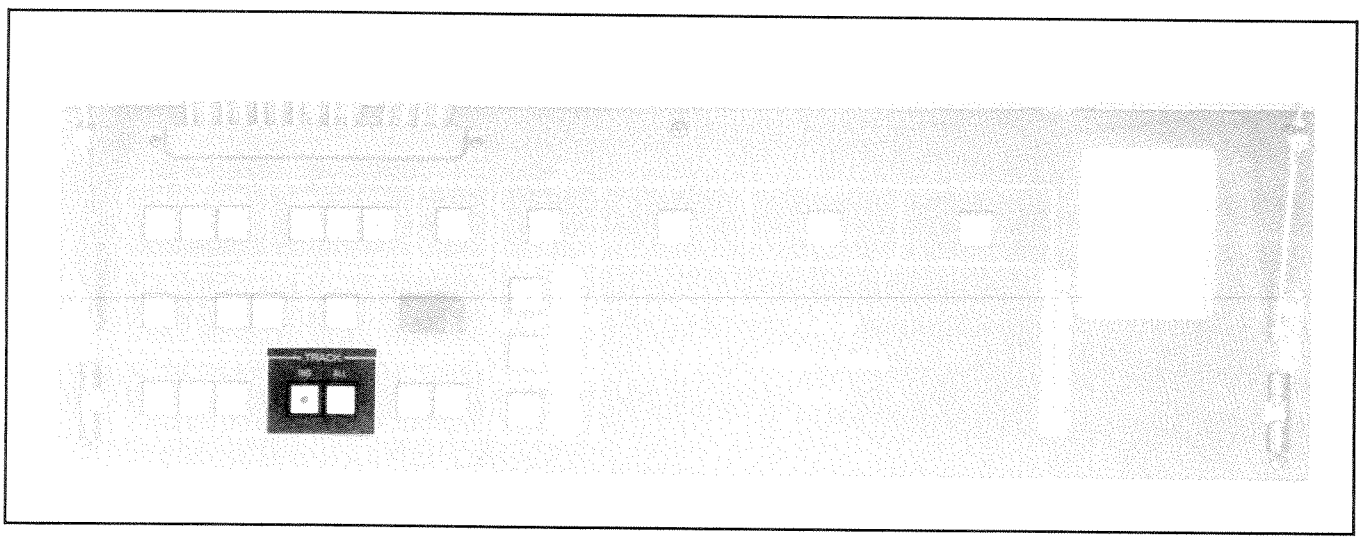

Figure 4-4. Track Selector

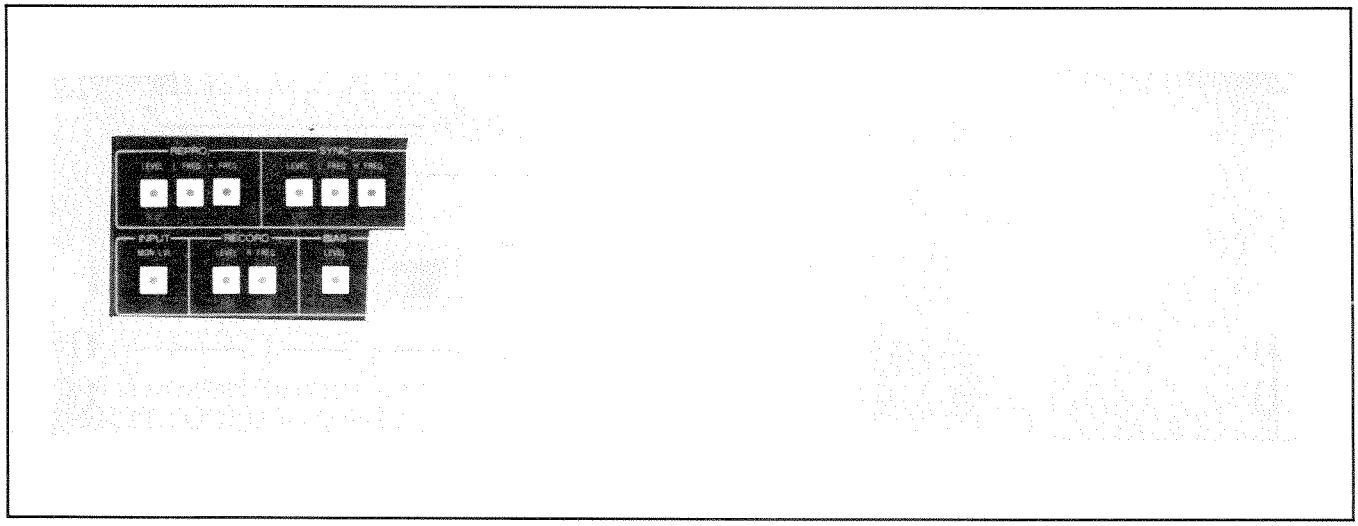

Figure 4-5. Parameter Selection

H.FREQ. This button selects the High Frequency equalization adjustment for the reproduce circuitry to be calibrated.

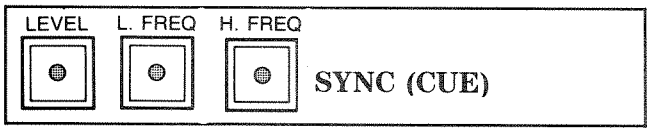

All buttons in this section are related to calibration of the sync (or cue) circuitry.

LEVEL This is the SYNC GAIN CONTROL selecting the SYNC MONITOR output level to be calibrated.

L.FREQ. This selects the Low Frequency equalization adjustment for the sync (or cue) circuitry to be calibrated.

H.FREQ. This selects the high frequency equalization adjustment for the sync (or cue) circuitry to be calibrated.

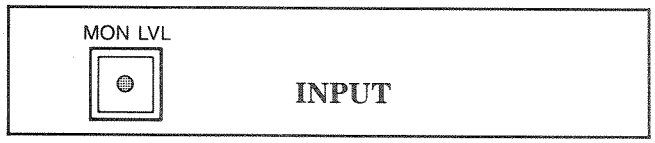

INPUT MONLVL INPUT MONITOR LEVEL

When this button is selected, the output monitor level during the INPUT mode is set.

All buttons in this section are related to record circuitry calibration.

LEVEL This is the RECORD LEVEL adjustment selecting the RECORD level to be calibrated. Pressing this button will cause the channels selected (as shown on the Status Display) to enter the RECORD READY mode.

H. FREQ. This button selects the High Frequency gain of the record circuitry to be calibrated.

LEVEL When this button is selected the amplitude of the bias signal is calibrated.

4.3.4 Audio Parameter Calibration Adjustment

Once a track selection and an appropriate audio parameter has been selected, a calibration adjustment may then be made. The adjustment will be made at a rate of approximately 1dB per second once a button is pressed. It will continue to increase or decrease until the button is pressed again or until the end of its range is reached.

Calibration is used in conjunction with other buttons to set the level of the selected function.

DEC This will cause the value of the alignment parameter selected to be decreased until the **DEC** button is pressed again.

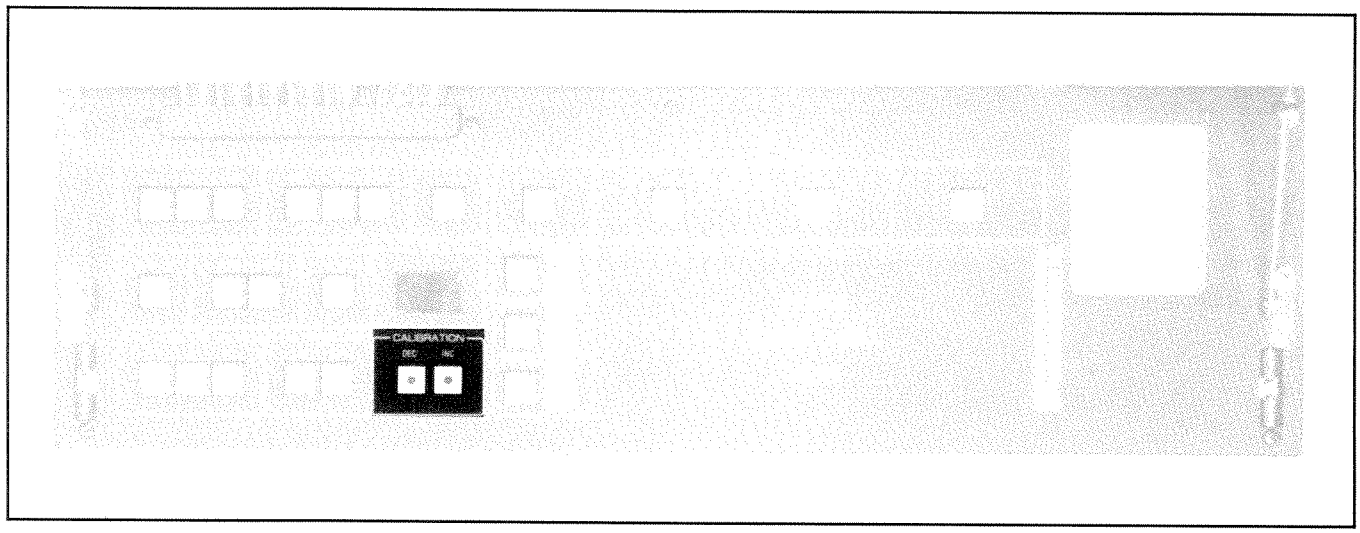

Figure 4-6. Audio Parameter Calibration Adjustment

INC This will cause the value of the alignment parameter selected to be increased until the **INC** button is pressed again.

NOTE: When increasing the amount of REC HI EQ, REPRO LO EQ or SYNC LO EQ, the number displayed on the Status Display will be reduced. This is only true for these three adjustments. All others will show large numbers when increased and smaller numbers when decreased. Rapid INC or DEC can be performed by holding down the control key and depressing **INC** or **DEC** .

4.3.5 Equalization Standards

One of three alernative EQ standards are provided on the **APR-5000**. These can only be changed when the global (ALL) track selection has been made unless selecting the Time Code Equalization Standard which can only be used on individual track selections.

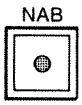

NAB EQ

This button selects the NAB equalization standard for all speeds except 30 ips for which there is no NAB equalization standard (cannot be selected when transport is operating at 30 ips).

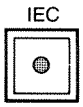

IEC EQ

This button selects the IEC equalization standard. It is the default for 30 ips operation. The AES proposed

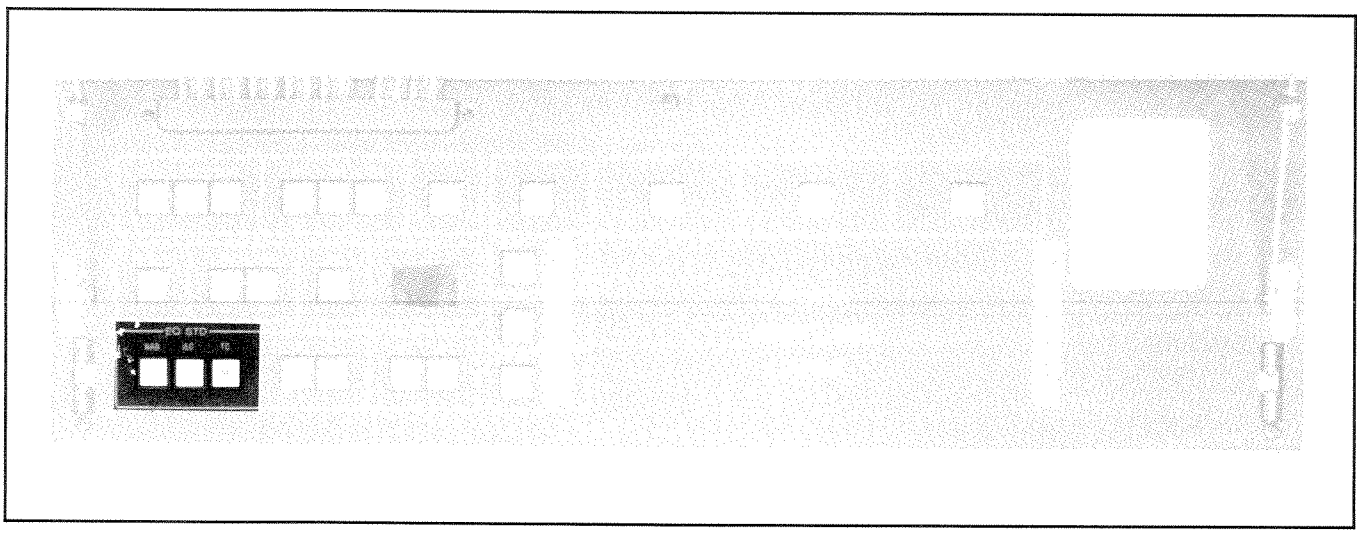

Figure 4-7. Equalization Standards

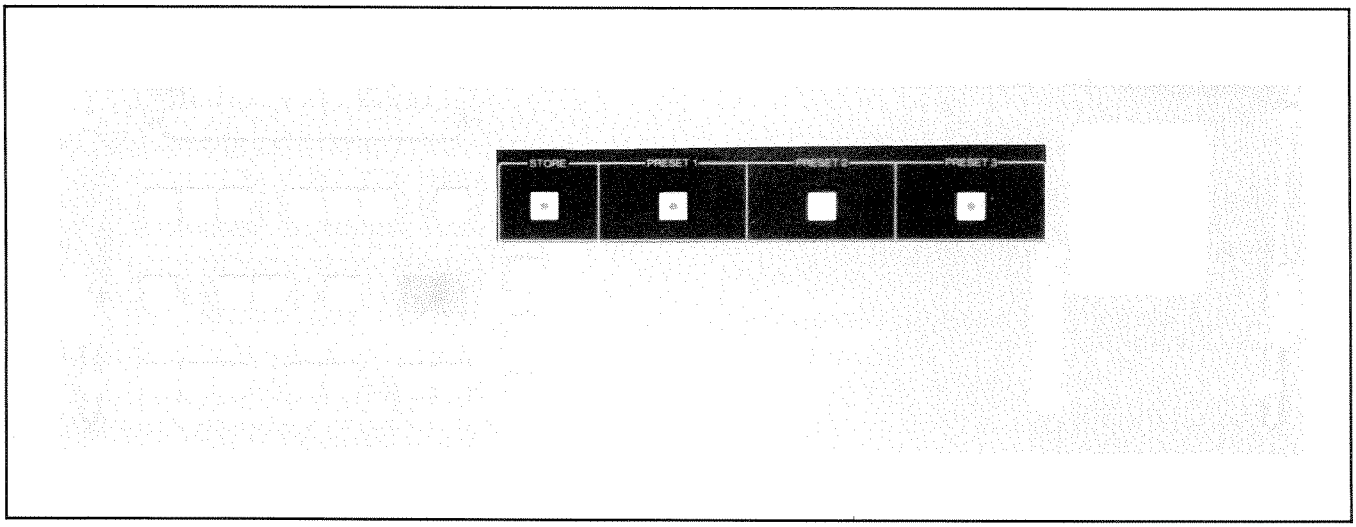

Figure 4-8. Preset Memory Locations

standard is the most recognized standard for 30 ips. It follows the IEC family of equalization standards.

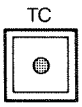

TIME CODE

This button selects a special equalization which is best suited for digital data stream transmissions such as time code or automation data. This equalization cannot be used for the audio channels. See TIME CODE SUPPLEMENT.

4.3.6 Preset Alignments

After an alignment has been performed, it can be stored in a preset memory location. There are three preset memory locations per tape speed for a total of nine preset memory locations for each headstack. These are used for providing for multiple tape formulation, alternative reference fluxivities, alternative over bias settings, alternate equalization standards, or any of the above combinations. User cards are provided for use with each headstack. These are used in conjunction with the presets.

CONTROL

This button is used to call up the secondary functions of any of the keys which have a blue silkscreen indication. The secondary function can only be accomplished when ALL channels are selected and the CONTROL button is pressed.

It is also used to arm the STORE function. When it is pressed simultaneously (like the shift key on a typewriter) with the STORE button, it will cause the STORE function to be armed (causing the STORE button to be lit).

STORE

This button is used to store the current values of all the adjustments into one of the three PRESET memory locations.

As a safety feature, this button must be pressed in conjunction with the CONTROL button in order to arm the STORE function. The STORE button will light to indicate that the STORE function is armed and all of the PRESET buttons will be turned off. By pressing a PRESET button at this time, the previously stored information will be erased and replaced by the current alignment.

PRESET X

These three buttons are labelled PRESET 1, PRESET 2 and PRESET 3. When pressed after the STORE function has been armed, the current value of all adjustments will be stored into that specific PRESET memory location. When pressed without the STORE function armed, it will cause the selected PRESET adjustments to be recalled. The PRESET button will remain lit to indicate that the PRESET alignment is being used and will remain lit until any of the parameters have been changed.

NOTE: If a PRESET button is pressed for which there is no previously stored alignment, the display will indicate "PE" (Preset Error) and that alignment will be invalid.

4.3.7 Speed Select Switches

Only one speed can be selected at a time. When the speed is changed from one to another, the PRESET memory locations are also changed. The last PRESET alignment selected for each speed is stored in memory so that when the speed is changed, the last PRESET alignment used for that specific speed will automatically be activated.

The memory which contains the information concerning each PRESET has battery backed-up so that when the machine is powered on the last SPEED and PRESET alignment in use will automatically be activated.

HI SPEED When pushed, this button will select the highest speed in the range allowed by the headstack identification code. The button will illuminate to indicate that high speed has been selected.

MID SPEED When pushed, this button will select the middle speed. This button will illuminate to indicate that the middle speed has been selected.

LO SPEED When pushed, this button will select the lowest speed in the range allowed by the headstack identification code. It will lilluminate to indicate that the transport is in the low speed mode.

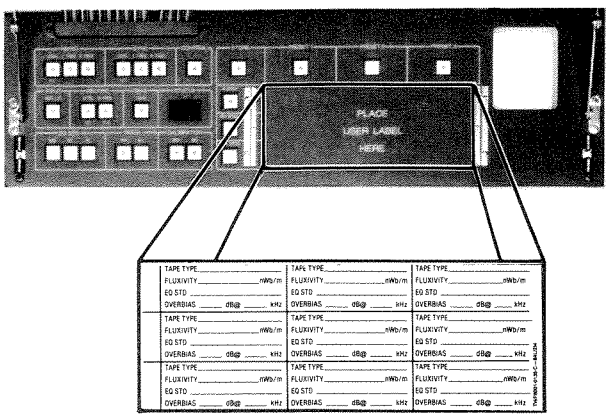

Figure 4-9. User Label

4.3.8 User Label

This user label provides a writing surface allowing the user to notate the specifics of a particular calibration. (See Figure 4-9.) There is a total of 9 alternate alignments available, three for each particular tape speed. Since these software calibrations are unique to each headstack, this user card travels with its corresponding headstack. When tape format, head and guide changes are required, the label changes accordingly. Once calibrated for a particular headstack these calibrations need not be done each time a format change is required. The headstack identification code allows the machine to call up the correct grouping of alignment presets.

4.3.9 Status Display

This is a two digit display to inform the user which tracks are going to be calibrated or to show the specific code value of the adjustment in question. When both decimal points are lit, the display is showing the value of a specific alignment parameter (indicated by the lit button). This is a hexadecimal value which ranges from 00 to FF. See Table 4-1 for a list of all display messages. Refer to APPENDIX A for a description definition of the Error Codes.

0.0. to F.F.	Indicate the hexadecimal value of a specific alignment function.
All	Selects all tracks to be active
1	Track 1 active
2	Track 2 active
3	Track 3 active
PE	Preset Error
HI	Headstack invalid
HE	Headstack error
HO	Headstack off

Table 4-1. Display Codes

4.3.10 Secondary Functions

Some of the buttons on the Alignment Control Panel have secondary functions indicated by blue silk-screened lettering under each of the buttons. To activate any of these functions, first depress the **CONTROL** button and hold it down. Then depress the button for which the secondary function is desired. These secondary functions are not used for normal alignment procedures. They allow the user to access adjustments which provides flexibility rarely available on traditional analog recorders.

The **CONTROL** button and the other button pressed will both light simultaneously to indicate that the

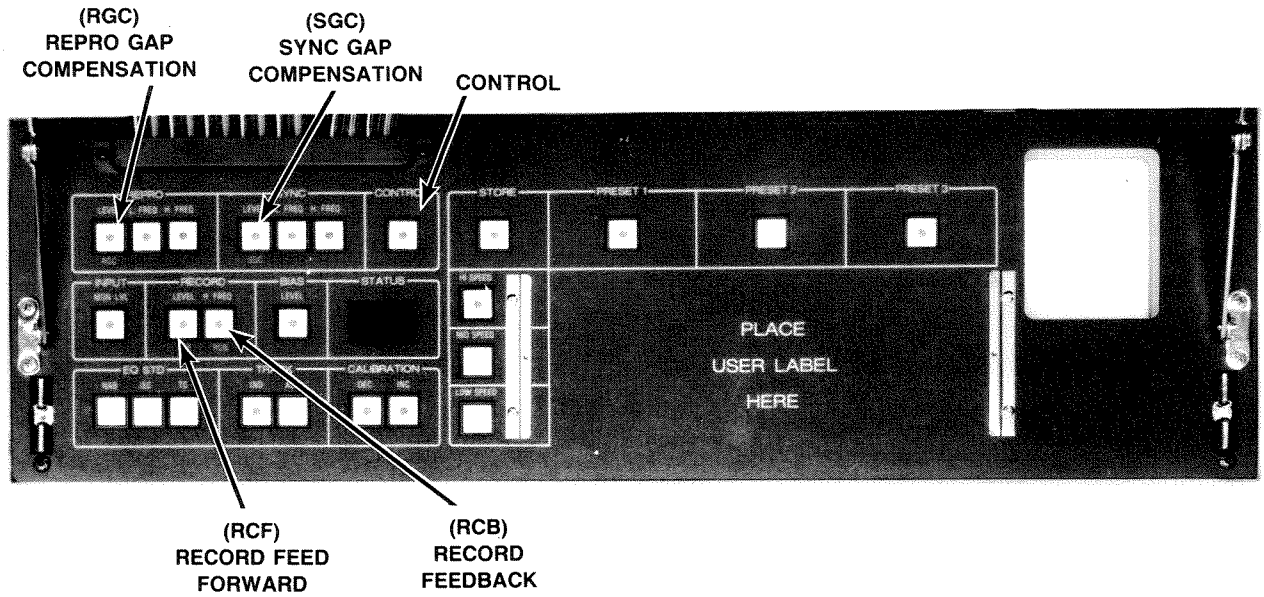

Figure 4-10. Secondary Functions of the Alignment Control Panel

second function is in effect. See Figure 4-10 for location of the second function buttons on the Alignment Control Panel.

For the specific purpose and use of the secondary functions refer to SECTION 6, MAINTENANCE AND CALIBRATION PROCEDURES.

RGC (REPRO GAP COMPENSATION)
This is the second function of the REPRO LEVEL control button. When the RGC is selected, the high frequency compensation can be adjusted. It controls the REPRO GAP compensation (RGC) which is used to counteract the high frequency loss due to the head gap. This is a useful alignment because headstacks of differing construction and gap width can be adjusted for optimum performance with a variety of different tape types. It is also useful when changing from one speed to another.

SGC (SYNC GAP COMPENSATION)
This is the second function of the SYNC LEVEL control button. When the SGC is selected, the high frequency compensation, which is used to counteract the high frequency loss due to the sync (or cue) head gap, can be adjusted.

NOTE: Gap Compensation for Repro (RGC) and Sync (SGC) provide a means to compensate for alternate gap-width heads. Refer to Table 4-3 for standard settings. In addition, these provide for a degree of low frequency response extension for heads of moderate width profile, when playing back long wave length signals. In other words, 30 ips playback of very low frequency material.

Adjusting gap compensation setting would be required if heads of significantly different gap-width are used. Should extensive relapping of tape heads cause a change in high frequency performance, gap compensation may be adjusted to compensate.

RCB (RECORD FEED BACK)
This is the second function of the RECORD HI-FREQ control button. This sets the record feed back compensation.

RCF (RECORD FEED FORWARD)
This is the second funtion of the RECORD LEVEL control button. This sets the record feed forward compensation.

NOTE: The RECORD FEED FORWARD (RCF) and RECORD FEED BACK (RCB) controls aid in adjusting the Frequency response for recording so that the frequency response during playback will be flat over a wide range of diverse tape formulation.

TYPICAL RECORD SECONDARY COMPENSATIONS

The settings for RCF and RCB will be dependent of the type of tape used.

TAPE TYPE		30 IPS	15 IPS	7.5 IPS
3M Scotch 226	RCF RCB	C0 C1	CB C7	C4 C4
3M Scotch 250	RCF RCB	C0 C2	CB C7	C4 C4
AGFA 469	RCF RCB	C0 C1	CB C7	C4 C4
Ampex 456	RCF RCB	C0 C1	CB C7	C4 C4
BASF LGR50	RCF RCB	C0 C1	CB C7	C4 C1
AGFA PER528	RCF RCB	C0 C2	CB C7	C6 C2
BASF LGR30	RCF RCB	C0 C2	CB C7	C6 C2
3M Scotch 176	RCF RCB	C0 C2	C8 C7	C4 C4

Table 4-2. Tape Type Settings

The settings for RGC and SGC are dependent on the headstack used.

The following settings are made for ¼-inch high-speed NAB and DIN heads.

Repro Gap Compensation (RGC)	30 ips 15 ips 7.5 ips	C1 CA CA
Sync Gap Compensation (SGC)	30 ips 15 ips 7.5 ips	C1 CC CE

Table 4-3. RGC and SGC Settings For High-Speed 1/4'' NAB and DIN Heads

4.4 METER HOUSING CONTROLS

This section contains the descriptions of all the controls and indicators of the Audio channel cards and the Monitor Speaker. These controls, used in conjunction with the Transport Control Panel and the Alignment Control Panel, comprise all of the audio controls for the **APR-5000**.

4.4.1 Audio Channel Functions

The audio channel can be subdivided as to the major sections of controls. Each card is divided into six blocks: the ALIGNMENT SELECT INDICATION (ALN), RECORD, MONITOR, RECORD LEVEL, OUTPUT LEVEL, and the VU Meter. See Figure 4-5 for locations of these controls.

ALN BLOCK

Within the ALN block on the audio channel front panel is a amber LED which indicates whether or not this channel is selected during an alignment operation. Whenever this channel is selected for changes from the Alignment Control Panel, the ALN SELECTED

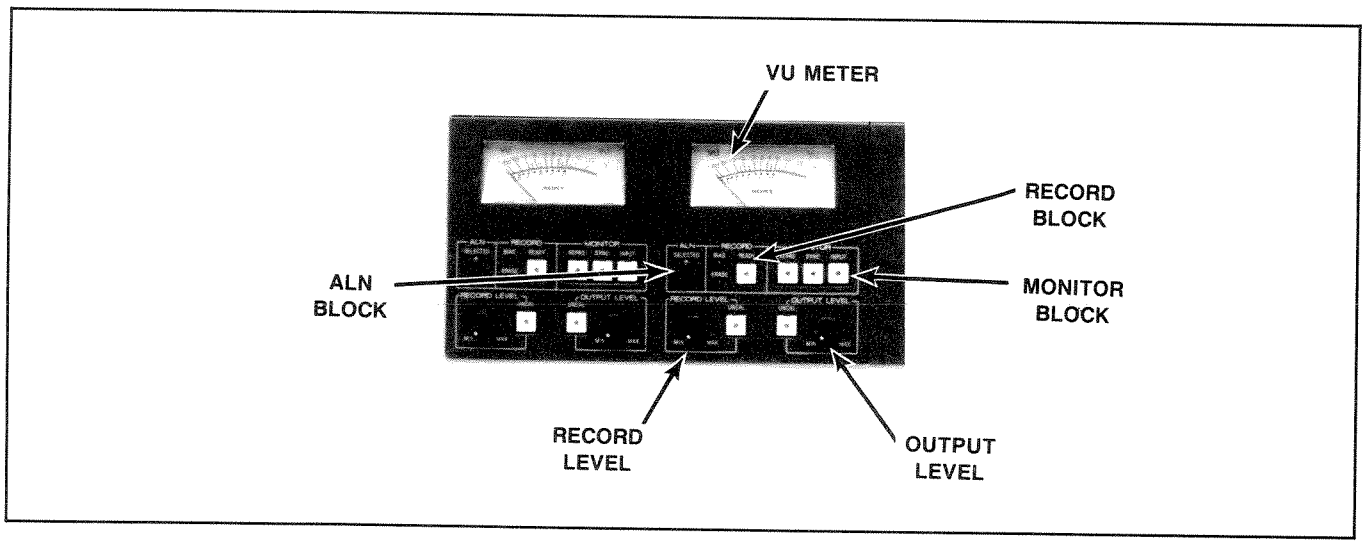

Figure 4-11. Audio Channel

LED will illuminate and all audio channel buttons are disabled except the RECORD READY button.

RECORD BLOCK

The RECORD block contains two status LEDs and one button. The LEDs will indicate whether the BIAS or ERASE signals are active. Both LEDs will turn on during a normal RECORD operation. During SPOT ERASE, the BIAS LED will not turn on (to indicate that the RECORD head bias is off) and the ERASE LED will be on indicating the erase head is turned on.

The RECORD READY button is also within the RECORD block. It is illuminated to indicate whether the RECORD READY is enabled or disabled.

MONITOR BLOCK

The MONITOR block contains the three buttons which will decide from where the output of the audio channel will come. The buttons are labelled:

1. REPRO
2. SYNC
3. INPUT

When the REPRO button is pressed, it will illuminate to indicate that the output of the audio channel will be derived from the reproduce head.

When the SYNC button is pressed, it will illuminate to indicate the output of the audio channel will be derived from the sync or cue head. This will, of course, be the same as INPUT during a RECORD operation. During a PLAY operation, the playback signal will come from the sync head instead of the REPRO head.

When the INPUT button is pressed, it will illuminate to indicate that the output of the audio channel is the input of the audio channel.

RECORD LEVEL

The RECORD LEVEL block contains a button and a knob. When the UNCAL button is pressed, it will illuminate to indicate that the RECORD level into the record circuitry is being varied by the vernier control (UNCAL). When the button is not illuminated, the channel will be in CAL mode with the record level internally preset.

OUTPUT LEVEL

The OUTPUT LEVEL block is similar to the RECORD block. It contains a button and a knob. When the button is not lit, the audio channel is in CAL mode and the output level is internally preset, When the UNCAL button is pressed, it will illuminate to indicate UNCAL mode. In UNCAL mode, the output level is set by the vernier control.

VU METER

Each audio channel contains a VU meter with a range of −20VU to +3VU. The meters are set at the factory so that +4dBu is equivalent to 0 VU (0dBu=0.778VRMS). The meter reference can be set for different levels by a potentiometer setting on the CNL (Channel Board). See Section 3.9 for the procedure. The source of the feed for the VU meter is decided by the selection within the MONITOR block.

When INPUT is selected, the meter will show the level of the output of the machine while monitoring INPUT. This level can be changed by varying the external signal source or by adjusting the RECORD LEVEL vernier control when the UNCAL button is illuminated.

When REPRO is selected, the meter will show the level of the output of the machine when monitoring REPRO. The signal is derived from the REPRO head and can be altered by selecting OUTPUT LEVEL UNCAL and using the OUTPUT LEVEL vernier control to set the level.

When SYNC is selected, the meter will show the level of the output of the machine while monitoring SYNC. This is the same as INPUT when SYNC is selected during RECORD mode (the INPUT button will illuminate). When the machine is not in RECORD mode, this signal is derived from the sync head and can be varied by the OUTPUT LEVEL vernier control when the UNCAL button is illuminated.

4.4.2 Monitor Speaker SSA-50

The **APR-5000** is equipped with a monitor speaker model SSA-50. The two buttons are used to select the input to the amplifier. When both buttons are selected, the input signals will be summed to the output of the monitor amp. The vernier control is used to trim the output volume. See Figure 4-12 for the location of these controls.

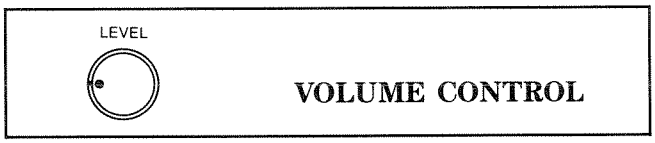

The vernier control sets the volume level of the monitor speaker. As this knob is turned clockwise the sound loudness will increase (MAX). As this knob is turned counterclockwise the loudness will decrease (MIN). This should be set by the user to a comfortable listening level.

TRK-1

TRACK ONE SELECT

This button will select Audio Channel 1 as the source for the monitor amp. The button will illuminate so that track 1 is being heard through the monitor speaker.

TRK-2

TRACK TWO SELECT

This button will select Audio Channel 2 as the source for the monitor amp. This button will illuminate to indicate that track 2 is being heard through the speaker.

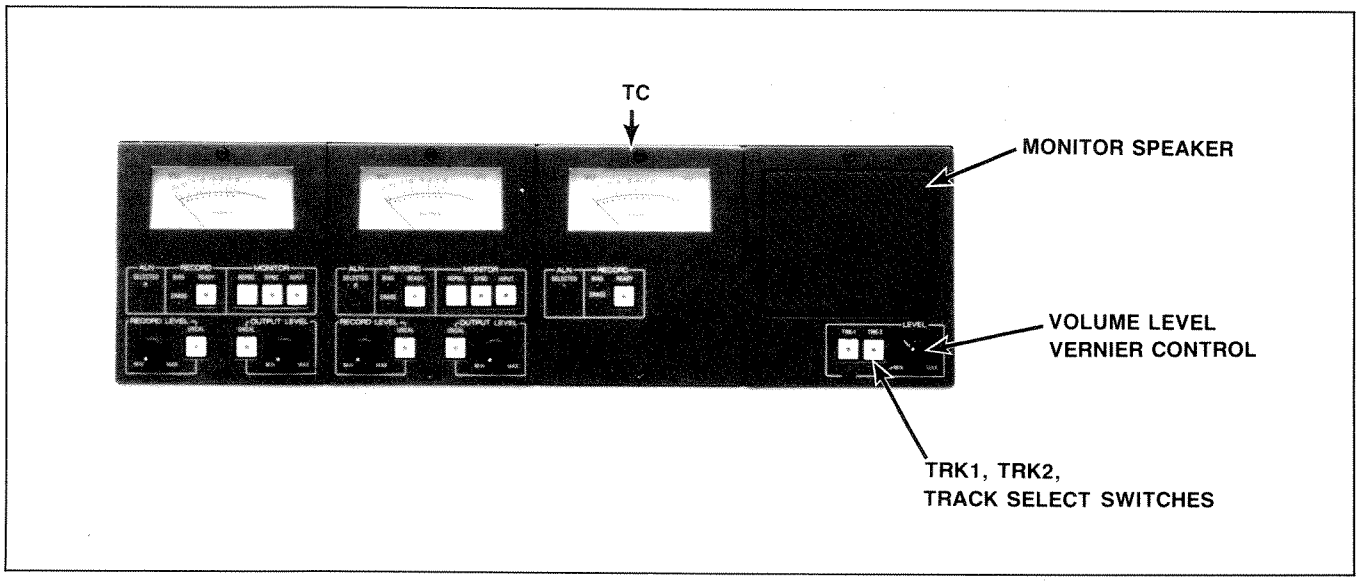

Figure 4-12. Meter Housing

SECTION 5
OPERATION

5.1 PREPARATIONS

5.1.1 Getting Started

After connecting the **APR-5000** to power and installing the appropriate input and output wiring, it is time to put on a reel of tape and use the machine. It is recommended that you use high quality professional recording tape. The tape will determine the quality of the recordings made with the **APR-5000**.
The following descriptions are intended to introduce you to a few basic operation procedures.

5.1.2 Mounting the Reels

The APR-5000 is capable of accommodating plastic or metal reels from 3 inches to 12½ inches. Some reels will require the use of the rubber reel platter shims (supplied accessory) depending on the size of the reel flange. This will vary from one manufacturer to the other. If the tape is not centered between the reel flanges, then use the rubber shim between the reel and the reel platter. If the reels to be used are 3 inches to 7 inches, they can be mounted directly on the spindle. When this is done, the reel hubs are installed to secure the reel to the platter. See the right hand diagram in Figure 5-1. The large NAB type 10½ to 12½ inch reels require the use of reel hubs as shown in the left diagram in Figure 5-1.

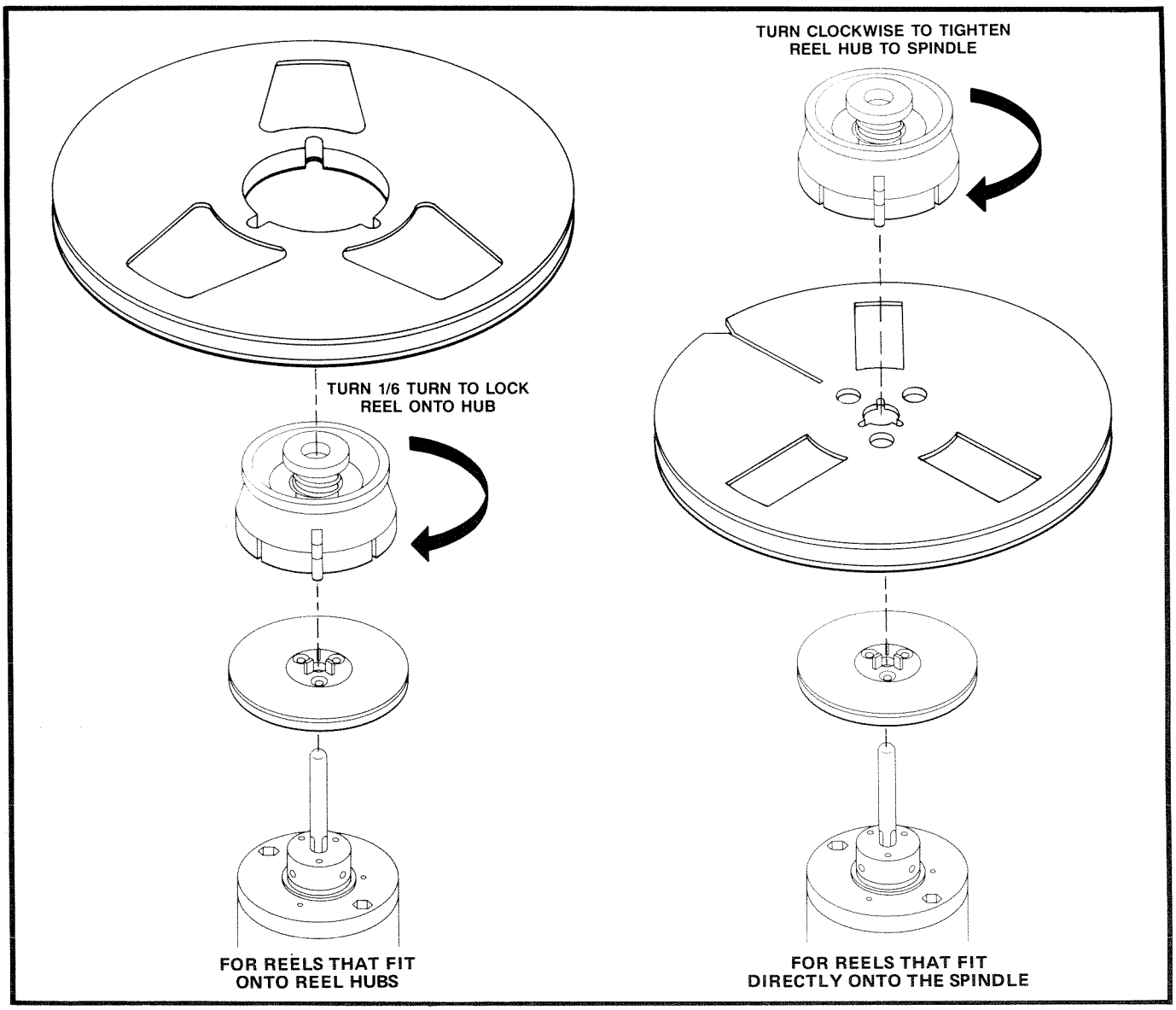

Figure 5-1. Mounting Reels Onto Spindles

5.1.3 Threading the Tape

Threading tape onto the **APR-5000** can be accomplished by referring to Figure 5-2. The tape must ride smoothly across the heads and the scrape flutter filter.

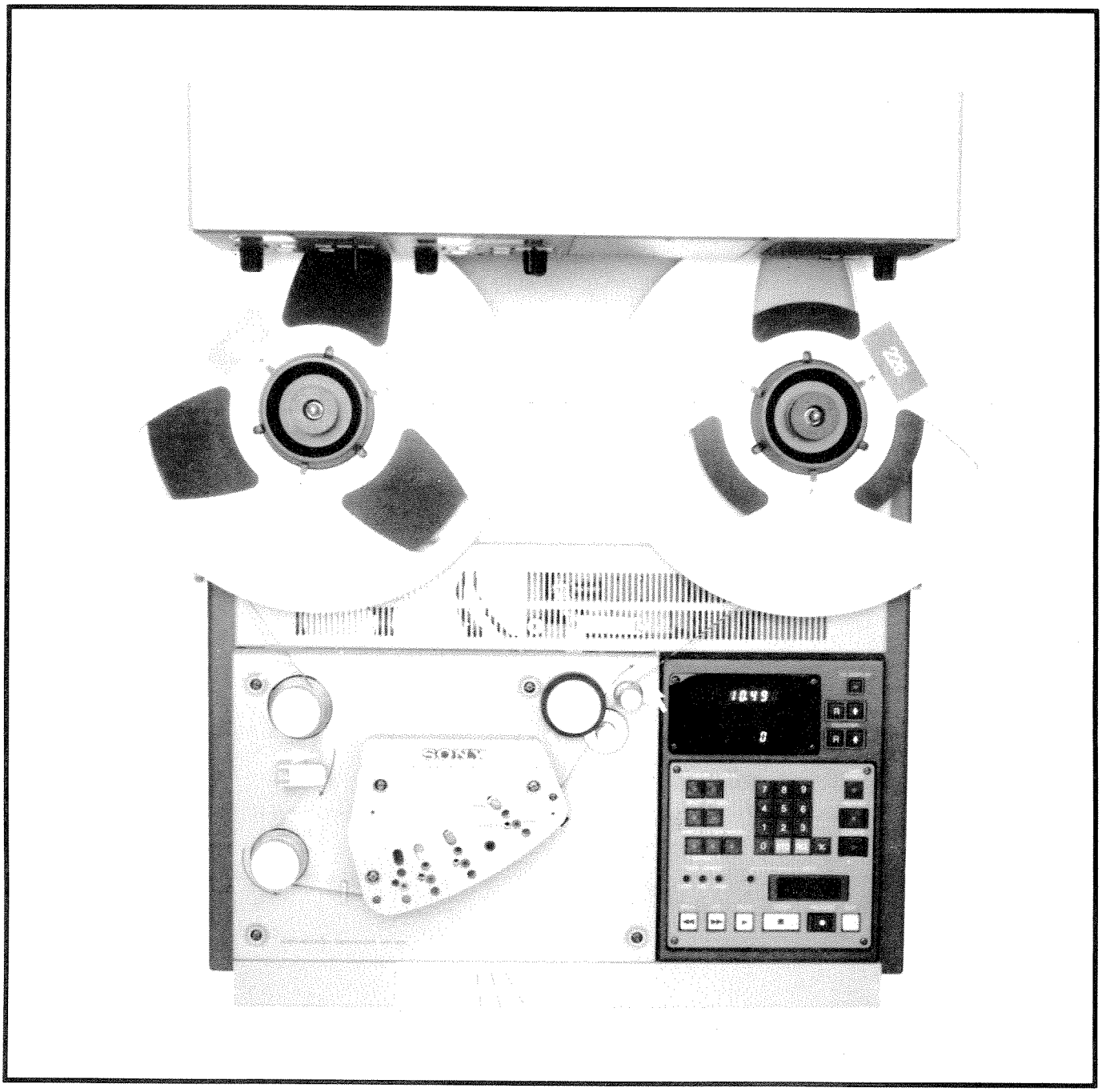

Figure 5-2. Threading Tape

5.2 TRANSPORT CONTROL

5.2.1 Tape Break Indicator

STEP 1 Thread the tape onto the reels. Refer to Section 5.1.3.

STEP 2 Turn the power switch to ON. The STOP button will be illuminated to indicate that the tape has broken the photo-cell housed under the headstack.

5.2.2 Fast Wind Modes

Refer to Figure 5-3, Transport Control Panel for each step below.

STEP 1 To advance the tape to a position forward on the tape press the **FF** button. The tape will wind from the supply reel to the take-up reel.

STEP 2 To rewind backwards on the tape, press the **REW** button. The tape will wind from the take-up reel to the supply reel.

STEP 3 To wind to a specific location on the tape, set the time in the LOCATE TIME display by pressing the appropriate numerical keys. Press the **LOCATE** button and the transport will fast wind to the desired location with the FF and REW buttons illuminated. When the TAPE TIME and the LOCATE TIME displays are the same, the transport will stop.

STEP 4 If it is desired, touch the MVC knob during a fast wind mode and the transport will enter SPOOL mode. The wind speed will be reduced to allow the tape to be packed evenly on the reel.

STEP 5 Each time a fast wind mode is selected, the audio channels will be dimmed and the lifters will engage removing the tape from the heads. If it is desired, the lifters can be defeated causing the tape to ride across the heads during fast wind modes. This is done by pressing the **LIFTER** button. When the lifters are defeated, the audio channels are not dimmed allowing the audio information to be heards as it winds across the heads.

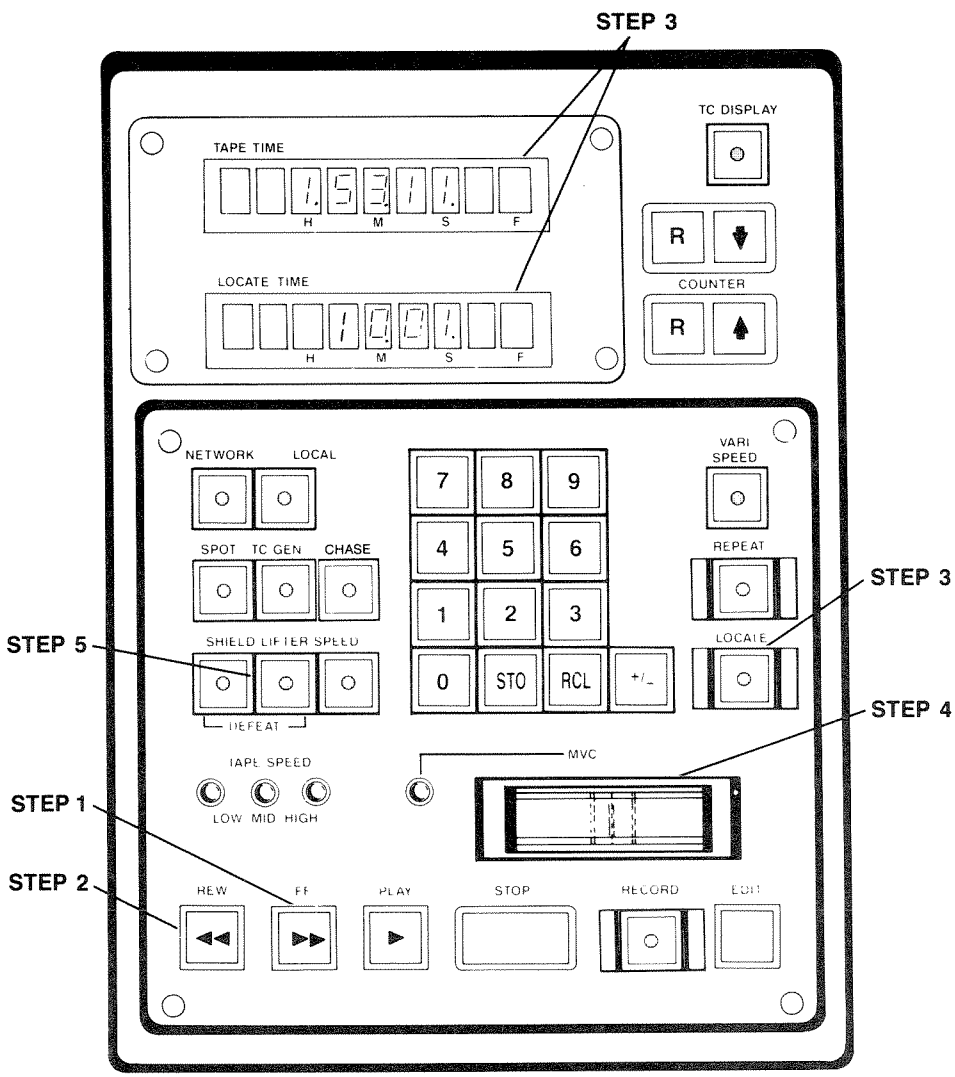

Figure 5-3. Transport Control Panel

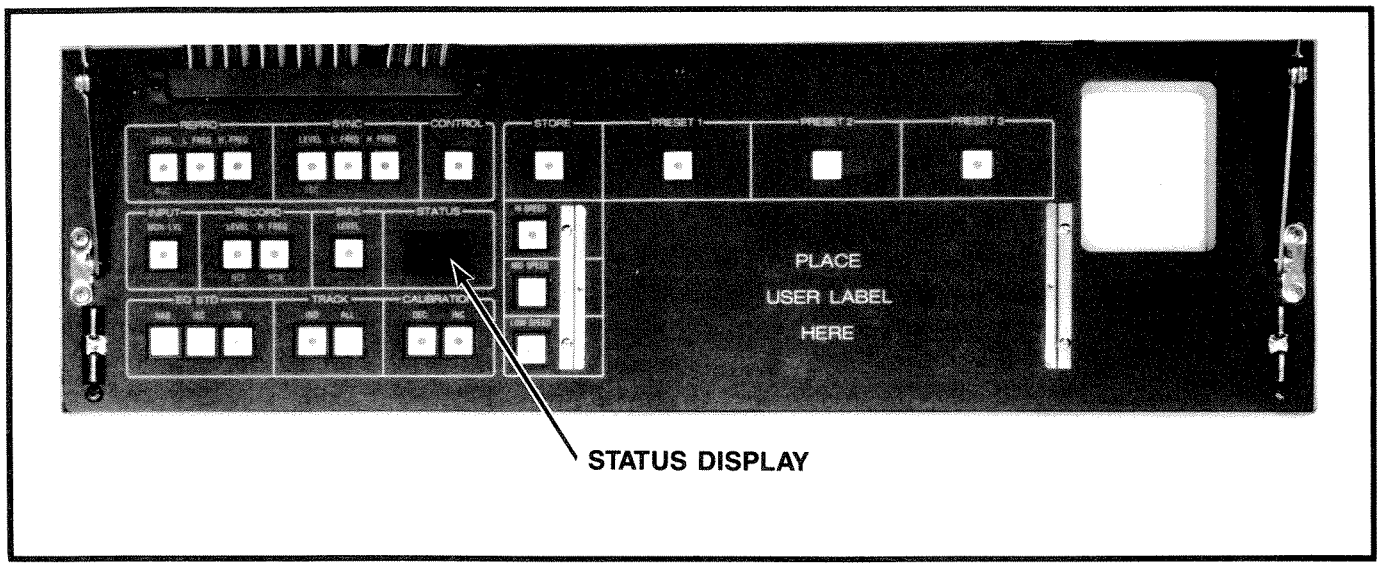

Figure 5-4. ALN Status Display

5.2.3 MVC Operation

The MVC knob can be used to shuttle the tape from the STOP mode. When the machine is in the STOP mode, touch the MVC knob. The green MVC LED will illuminate to indicate that the MVC mode is selected. Move the knob to the right and the transport will wind a a forward direction, that is, the tape will be wound from the supply reel to the take-up reel. The more to the right the MVC control is pushed, the faster the wind speed will be. Now move the MVC knob to the left. The tape will wind in the rewind direction with the tape from the take-up reel emptying onto the supply reel. When the MVC mode is used, the audio channels will not be dimmed allowing the audio signal from the tape to be audible through the monitor.

5.3 RECORDING

5.3.1 Preparations

STEP 1 Connect the appropriate audio line source to the IN connectors of the **APR-5000**.

STEP 2 Turn the power switch to the ON position and ensure that there is no error indicated in the Status Display. If an error is indicated see Appendix A and correct the error, then continue.

STEP 3 Set the desired channels to RECORD READY by pressing the appropriate Record READY buttons. (See Figure 5-5).

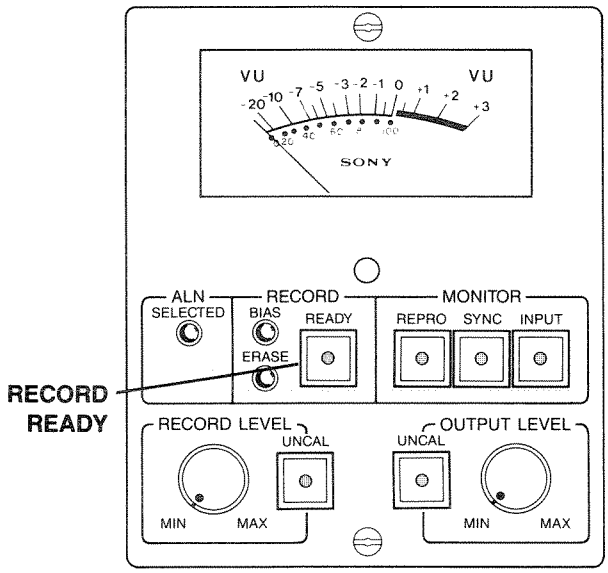

Figure 5-5. Meter Housing — Recording Preparations

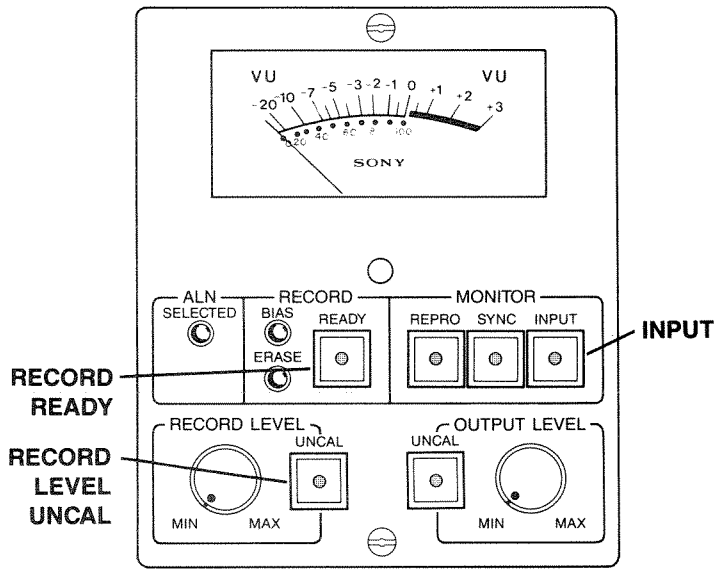

Figure 5-6. Meter Housing — Audio Level Adjustments

5.3.2 Audio Level Adjustments

Press **INPUT** for each of the audio channels in the meter housing with the audio information to be recorded at the APR-5000 audio inputs. It is recommended to play a section of the material which has the most level. Be sure that the meters do not deflect above 0 VU for sustained periods. If they do, it will be necessary to reduce the input signal or to press the RECORD LEVEL **UNCAL** button. Peak program material should never cause the needle to deflect to its right side stop (greater than +3dB). Refer to Figure 5-6.

5.3.3 To Start Recording

Press the **PLAY** and **RECORD** buttons simultaneously. All channels that are RECORD READY with the **READY** button lit will enter RECORD mode and the BIAS and ERASE LEDs will be illuminated. The **PLAY** and **RECORD** buttons will also be illuminated.

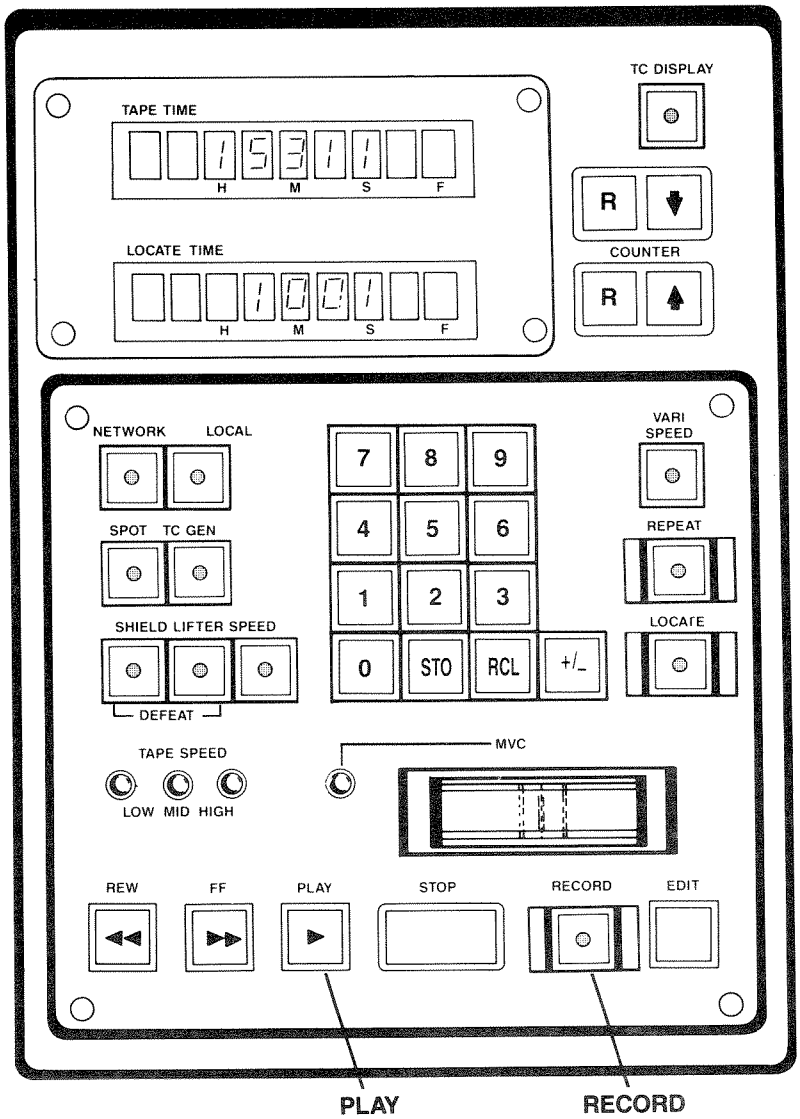

Figure 5-7. Transport Control — To Start Recording

5.3.4 Monitoring During Record

During RECORD mode the user may select the monitor source as either being the INPUT signal which is being recorded (press INPUT or SYNC) or the REPRO signal which is derived from the Reproduce head playing back the signal which has just been recorded (press REPRO). The REPRO signal will be delayed from the INPUT signal (by the distance between the heads divided by the Play speed).

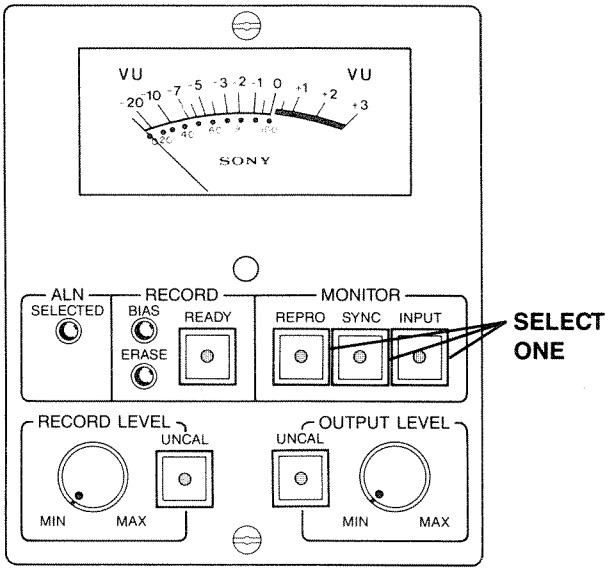

Figure 5-8. Meter Housing — Monitoring During Record

5.4 PLAYBACK

5.4.1 Preparation

STEP 1 Connect the audio output (OUT) connectors of the **APR-5000** to the line input connectors of the desired mixing console or audio amplifier.

STEP 2 Turn the power switch to ON. Set the audio channels for the desired playback source. This will be either the Repro head (REPRO) or the Record head (SYNC). The Repro head will give better frequency response.

5.4.2 To Start Playback

STEP 1 Press the PLAY button. It will illuminate to indicate that Play mode has been selected. If the transport is not in STOP mode, the STOP button will also illuminate to indicate that the transport is in Preset Play. When the transport comes to a full stop, then it will enter Play mode.

STEP 2 If desired, set the output level of the **APR-5000**. Press OUTPUT UNCAL . It will illuminate to indicate that the output level will now be set by the vernier control. Set the vernier control to the desired volume level. The panel meter will indicate the level of the output.

5.5 RECORD PUNCH-IN

When it is desired to add a channel referenced to an existing channel.

In the example, we will attempt to append the material on one track (TK1) for ten seconds in the middle of a program. Track 2 will remain in PLAY mode and will not be changed during this operation.

STEP 1 Connect the track 1 IN connector to the appropriate audio source. This source will provide the audio material which will be appended into the program.

STEP 2 Connect the track 1 and track 2 OUT connectors to the desired audio monitoring source. During the punch-in period, track 1 will be live (it may be desired to mute or attenuate the signal during the punch-in period).

STEP 3 Put track 1 in RECORD READY mode by pressing the READY button.

STEP 4 Put track 2 in SAFE mode. Ensure that the READY button is not illuminated. If it is illuminated, press the RECORD READY button and will extinguish.

STEP 5 Place both channels in SYNC mode by pressing the SYNC buttons.

STEP 6 Locate the section of the program to be appended. Wind to a point several seconds before the time the desired recording will begin (the punch-in point).

STEP 7 Press the PLAY button. The transport will enter PLAY mode and the program material will be heard through the audio monitor.

STEP 8 At the appropriate time in the program, press the RECORD button. Track 2 will enter the RECORD mode and the BIAS and

ERASE LEDs will illuminate. The previous material on track 2 will be erased.

STEP 9 When the punch-in period is completed, press the **PLAY** button and track 2 will drop out of RECORD mode.

5.6 OTHER OPERATIONS

5.6.1 Spot Erasing

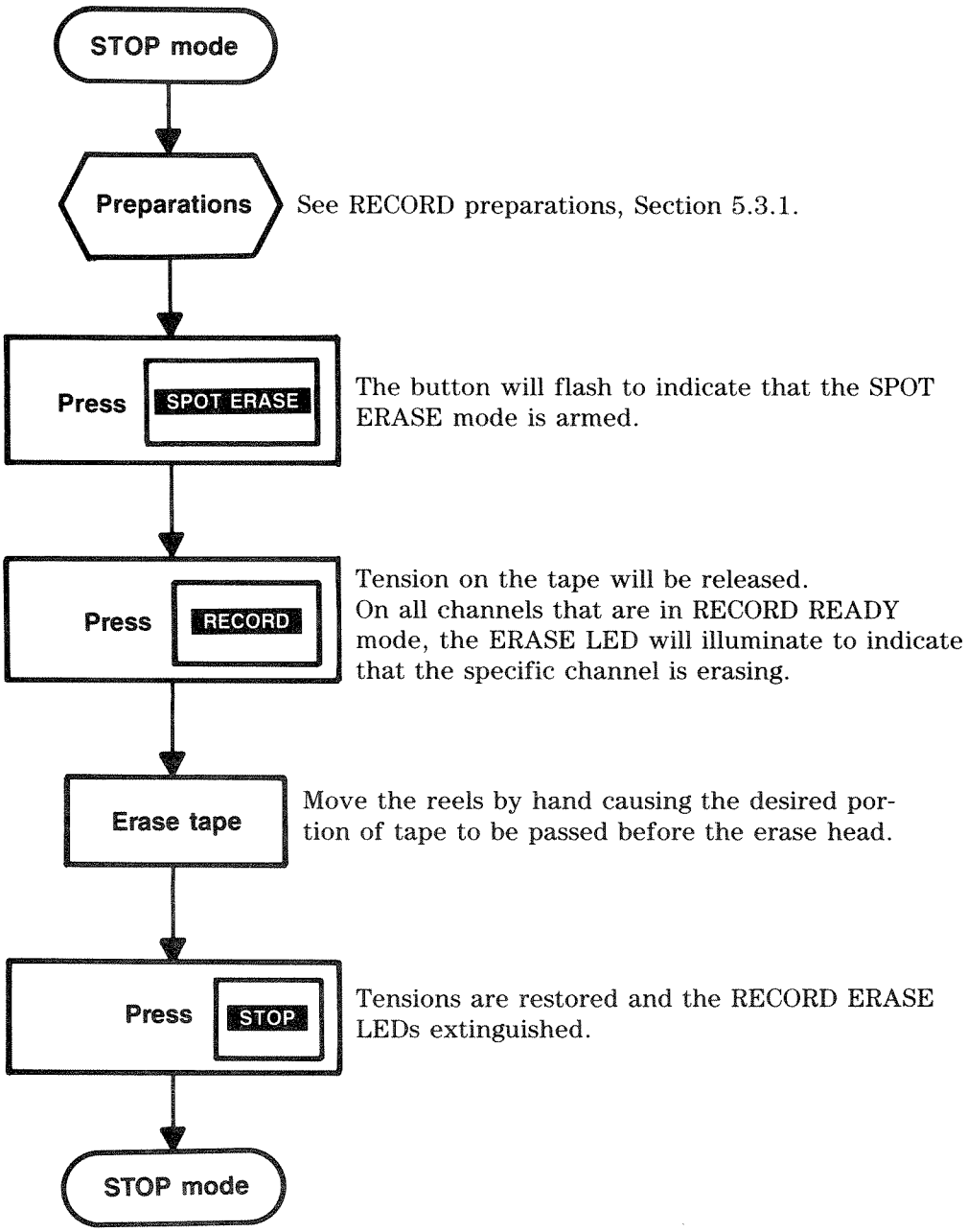

5.6.2 Repeat Function

This is used to create a "looping" mode. There are two methods of creating a repeat function. If the repeat time values are not known:

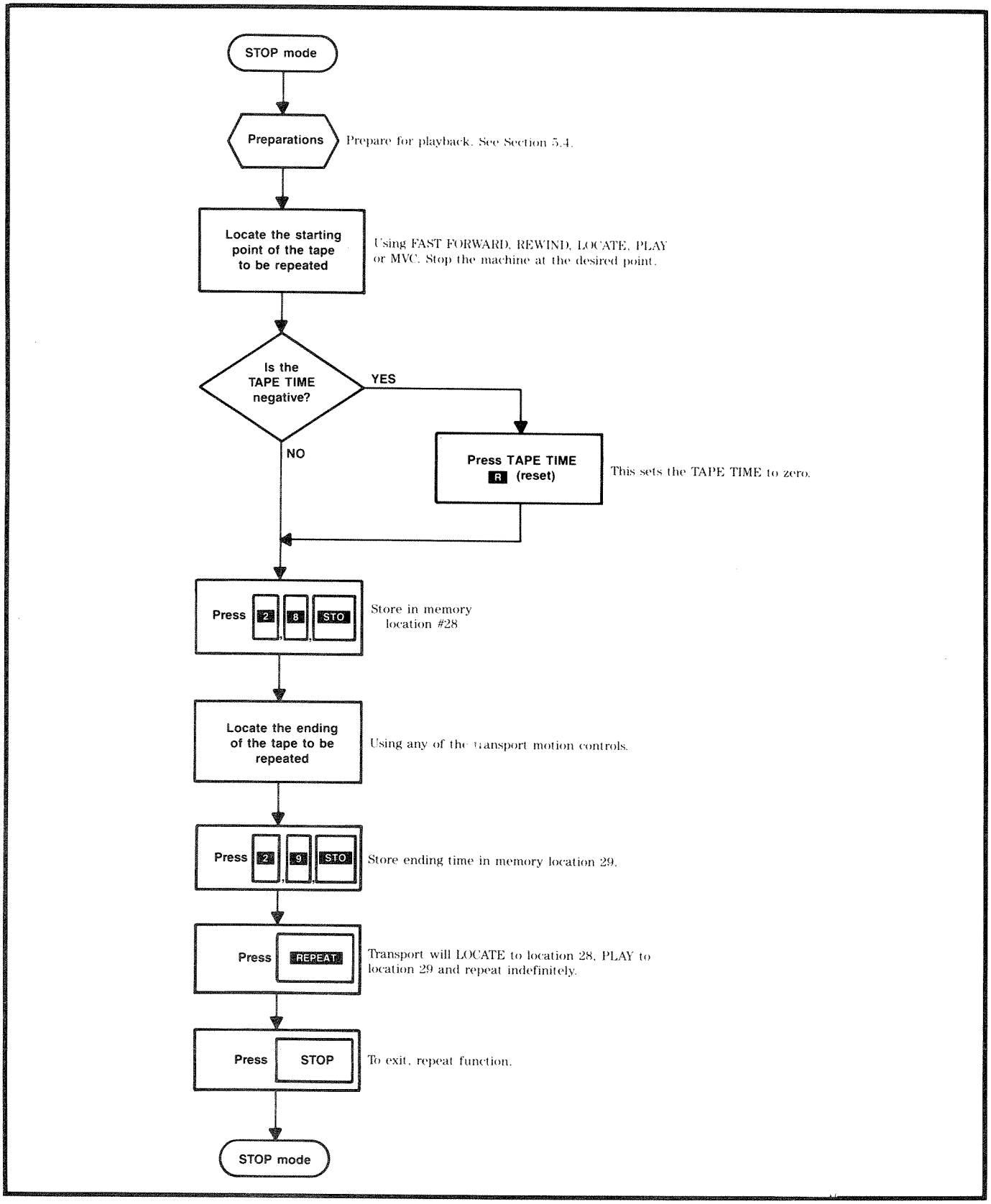

When the repeat time values are known:

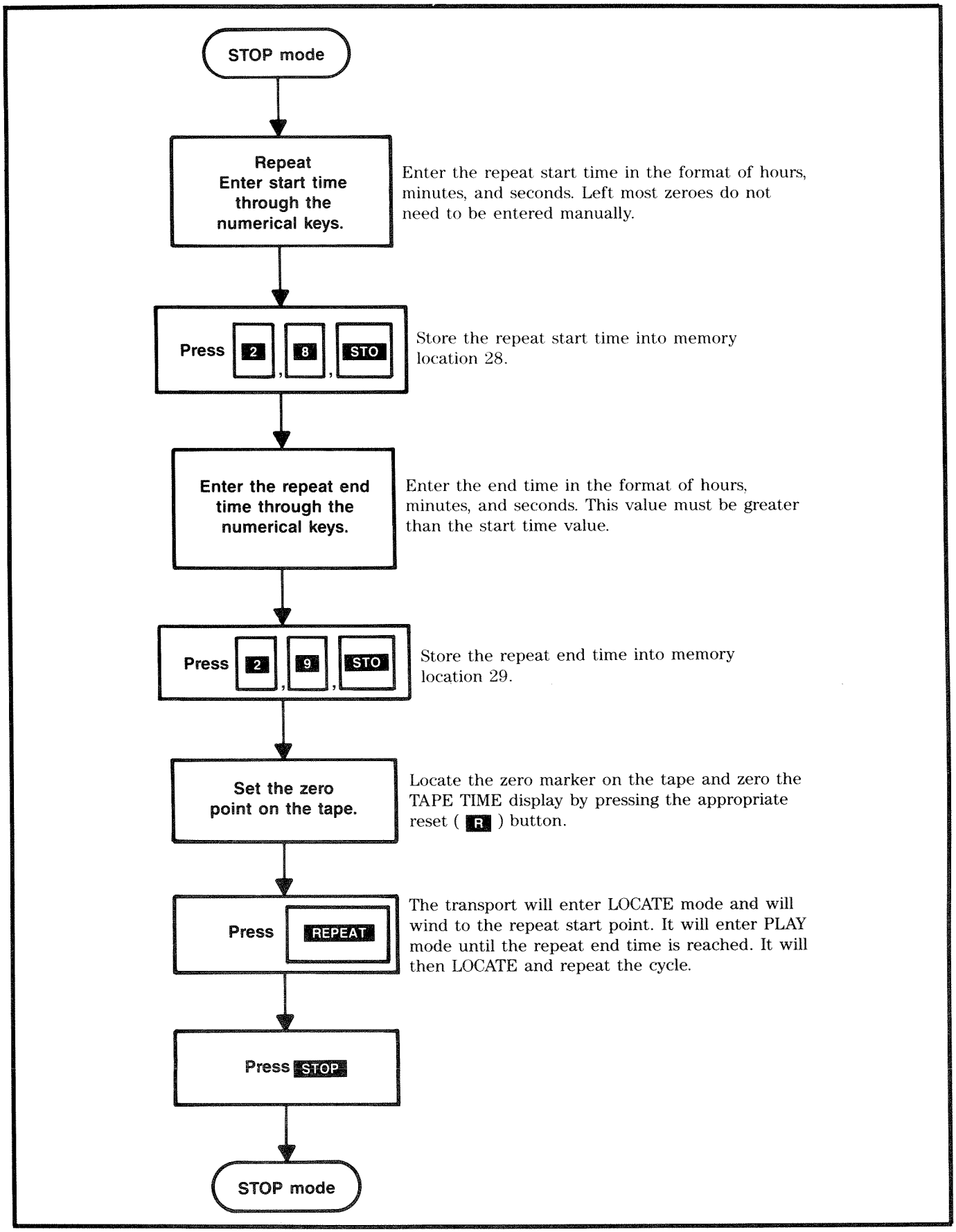

SECTION 6
MAINTENANCE AND CALIBRATION PROCEDURES

6.1 OVERVIEW

This section provides the information required to perform routine maintenance, full audio alignment, and the electro-mechanical re-adjustment of the tape path. All of these procedures do not need to be performed at regular service intervals.

6.2 NECESSARY TOOLS

The following is a list of test equipment and unique tools required for performing maintenance or repair on the **APR-5000**. The test equipment marked with an asterisk (*) and the appropriate test tapes are the basic tools necessary for regular preventive maintenance and alignment. Substitute test equipment should have equivalent or better specifications than the test equipment on the suggested list.

6.2.1 Test Equipment

De-magnetizer* —	NORTRONICS Model No. QM-211 or equivalent
Oscilloscope —	Tektronix 455, 60MHz, BW, Dual Trace, Delayed Sweep or equivalent
AC voltmeter* —	Senheiser UPM-550 or equivalent
Signal Generator* —	Krohn Hite 1000A, Hewlett Packard 209 or equivalent
Digital Voltmeter —	Fluke 77, Beckman 310 or equivalent
Logic Probe	
Flutter Meter —	EMT 424 (optional)

6.2.2 Required Service Items

1) Lint-Free Cleaning Cloth (towel, rag, etc.)
2) Cleaning Piece (SONY part #2-034-697-00), Foam swabs, or Photographic Grade Chamois
3) Cleaning Fluid (SONY part #Y-2031-001-0), Methanol, or Commercial Grade Alcohol

6.2.3 Test Tapes

To properly align the **APR-5000**'s playback electronics, precision test tapes must be used. These tapes, made under controlled laboratory conditions, contain a series of test tones at a standard reference fluxivity. The test tapes suggested for use are standard reproduce reference tapes manufactured by Magnetic Reference Laboratory. In order to retain the integrity of these tapes, it is important to handle the tape with care. Never store the tapes near any magnetic fields, transmitters, or expose them to extreme temperature or humidity. Whenever it is necessary to use any of these tapes always clean and de-magnetize the headstack prior to mounting the test tape onto the reel platter. Always make sure that tape is packed evenly on the reel by playing to the end or using SPOOL WIND mode.

NOTE: The high frequency tones recorded on the tape will drop several decibels as the tape becomes older. Deteriorated alignment tapes should be replaced immediately.

6.2.4 Tools

Technician Tools	U.S. inch standard
J1: Rack Gauge	J-6105-980-A
J2: Zenith Block	J-6105-960-A
Metric Nutdriver Set	4mm to 13mm
Metric Hexdriver Set	1.27mm to 5mm
2mm Screwdriver	
J3: Tentelometer	J-6041-680-A
2.6mm Screwdriver	
3mm Screwdriver	
4mm Screwdriver	
J4: Spring Scale	J-6041-640-A (5 kg), J-6042-670-A (1 kg), or equivalent
J5: Roller Guide Alignment Tool	J-6105-930-A

For additional unique tool information and addresses of manufacturers see Appendix C.

1/4-inch machine Magnetic Reference Laboratory (MRL)		1/2-inch machine Magnetic Reference Laboratory (MRL)	
MRL #21T204	7.5 ips NAB	MRL #31T218	7.5 ips NAB
MRL #21T302	7.5 ips IEC	MRL #31T328	7.5 ips IEC
MRL #21J205	15 ips NAB	MRL #31J219	15 ips NAB
MRL #21J303	15 ips IEC	MRL #31J339	15 ips IEC
MRL #21L221	30 ips AES	MRL #31L220	30 ips AES
MRL #21F101	3.75 ips NAB/IEC		

Table 6-1. Recommended Test Tape

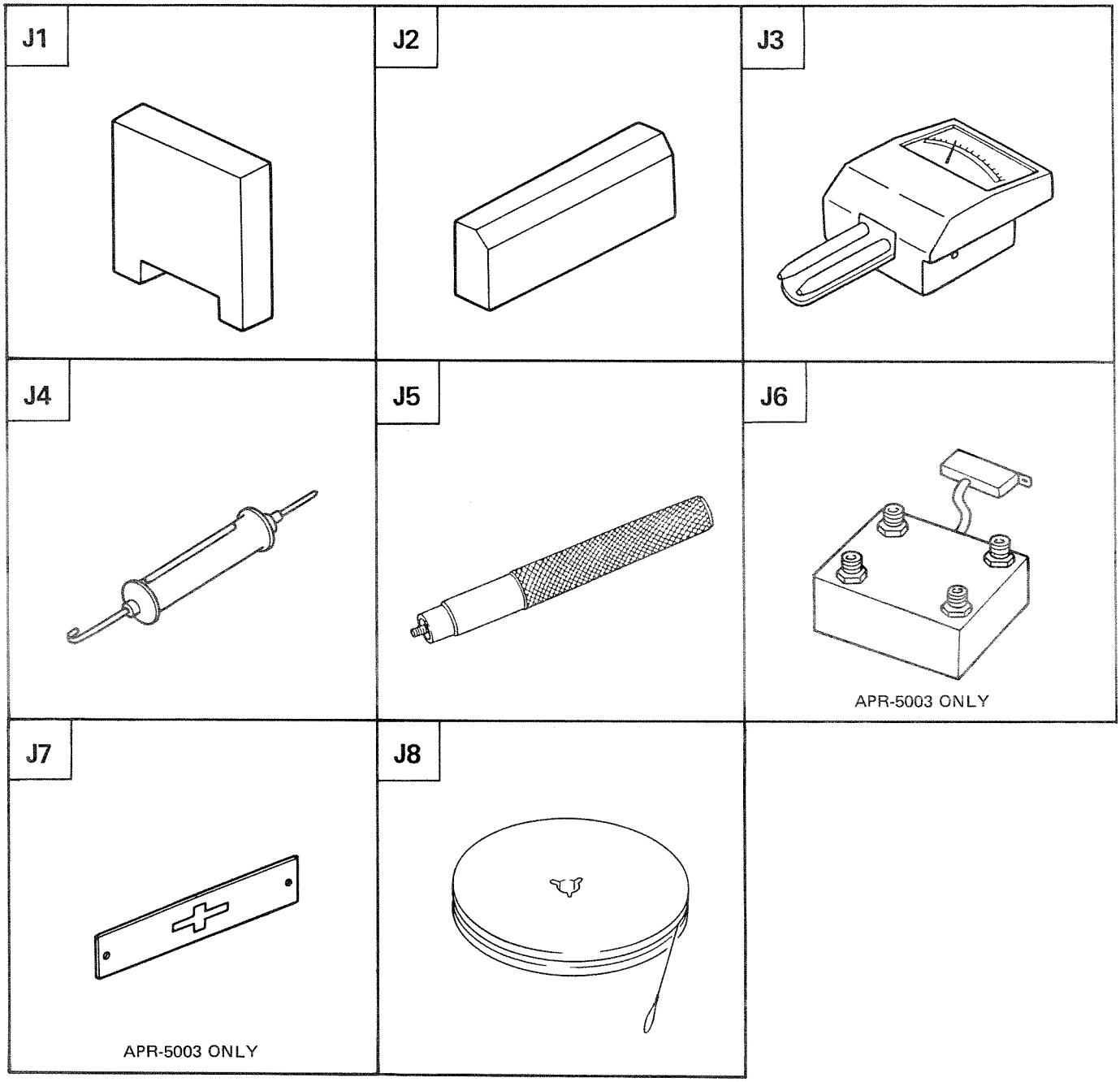

Illustration No.	Description	J No.
J1	Rack Gauge	J-6105-980-A
J2	Zenith Block	J-6105-960-A
J3	Tentelometer	J-6041-680-A
J4	Spring Scale (5 kg)	J-6041-640-A
J4	Spring Scale (1 kg)	J-6042-670-A
J5	Roller Guide Alignment Tool	J-6105-930-A
J6	Time Code Decoder Box	J-6106-140-A
J7	Center Track Time Code Head Gauge	J-6220-320-A
J8	Brake Torque Hub	J-6101-430-A

6.3 ROUTINE MAINTENANCE

The **APR-5000** requires minimal maintenance. The most important preventive maintenance is regular cleaning. Perform the following maintenance at the specified intervals.

PREVENTIVE MAINTENANCE	TIME INTERVALS BETWEEN MAINTENANCE*
Clean Tape Path	10 Hours
De-magnetize Heads	20 Hours
Clean Moving Guides	100 Hours
Tape Tension	500 Hours
Check Reel Motor Brake Assemblies	1000 Hours
Renew Hours Meter	5000 Hours

Table 6-2. Preventive Maintenance Schedule

* = Equivalent Playing Hours at 15 ips

Refer to Section 6.5, Transport Alignment Procedures for a full description of the preventive maintenance.

6.4 DISASSEMBLY FOR SERVICING

6.4.1 Headstack

The headstack on the **APR-5000** is easily removable by unscrewing the three large screws from the head block. Inside the headstack assembly, there is a DIP switch used for programming the headstack identification (ID) code. See Figure 6-13 for location of these parts. Each time a headstack is used on the machine for the first time, be sure to make the appropriate head adjustments as shown in Sections 6.5 and 6.6.

NOTE: All adjustment and alignment procedures do not require removal of the headstack.

STEP 1 Remove the headstack cover if it installed in the headstack.

STEP 2 Unscrew the three screws from each corner (see attachment screws on Figure 6-12). These screws are captive to the headstack assembly.

STEP 3 Remove headstack from deck by pulling straight up.

STEP 4 To re-install, gently place the headstack to be installed on the connector and studs. (See Figure 6-1.)

CAUTION: Ensure that the connectors on the headstack and on the deck are properly mated. This is very important in order to prevent damage to either of the connectors.

STEP 5 When the connectors are properly mated, apply downward pressure on the headstack assembly so that is seats firmly to the deck connector and studs.

STEP 6 Tighten the three mounting screws.

6.4.2 Removal of Top Front Cosmetic Cover

Some of the adjustment and alignment procedures in this section requires removal of the top front cosmetic cover. When it is necessary refer to this procedure. (See Figure 6-1.)

STEP 1 Remove the headstack cover, if it is installed. Remove the headstack. Refer to Section 6.4.1.

STEP 2 Remove the pinch roller by unscrewing the metal cap (counter clockwise) and lifting the rubber puck.

STEP 3 Remove the four screws on the top of the upper cosmetic panel (around the reel motors) near the headstack.

STEP 4 Remove the top front cosmetic panel by lifting upward.

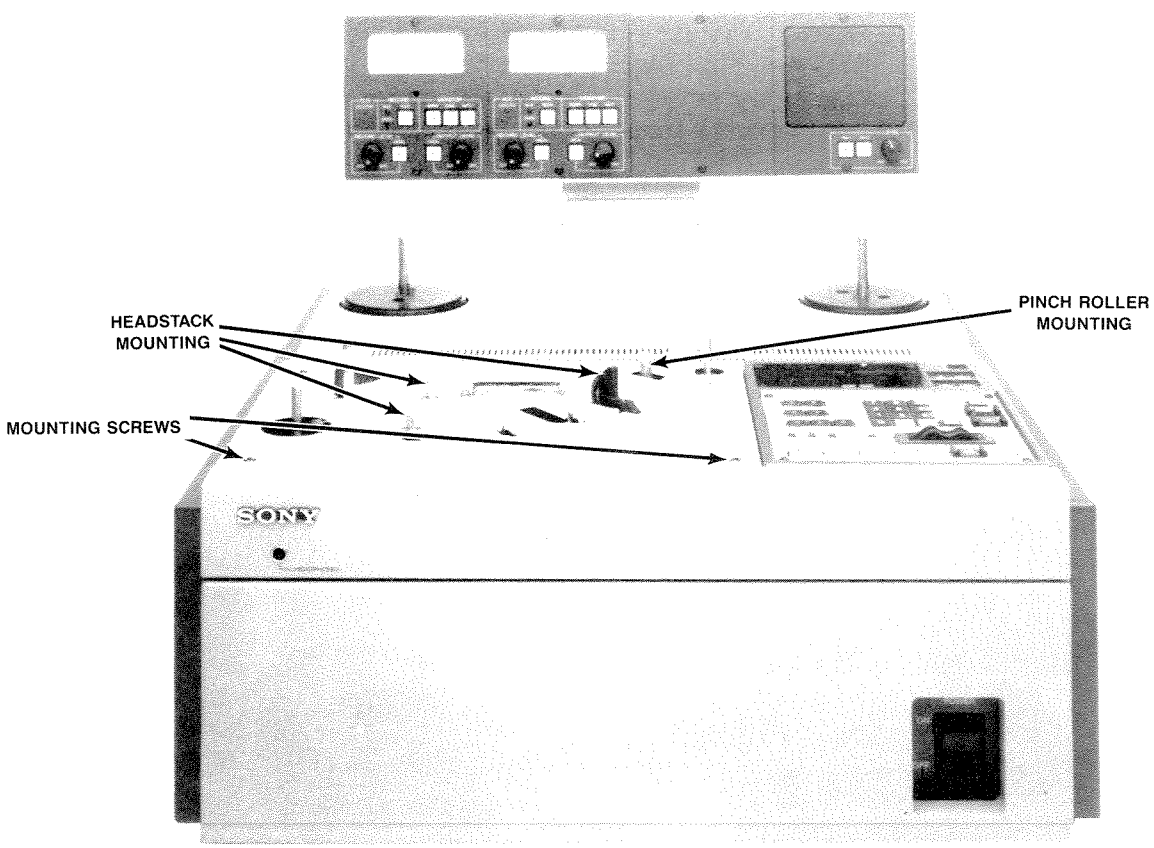

Figure 6-1. Removal of Top Front Cosmetic Cover

6.4.3 Removal of Top Rear Cosmetic Cover

Some of the adjustment and alignment procedures in this section requires removal of the top rear cosmetic cover. When it is necessary refer to this procedure. (See Figure 6-2.)

STEP 1 Remove any reels that are mounted on the reel motor spindles.

STEP 2 Loosen the two captive screws on either side of the neck brace and tilt the Meter Housing to the rear (so that the front of the Meter Housing is tilted upward). This is necessary to allow clearance.

STEP 3 Remove the two screws located at the rear corners of the cosmetic panel.

STEP 4 Remove the cosmetic panel by lifting the rear forward. It is hinged on the front.

STEP 5 The KBD and DSP may be removed by unscrewing the two screws located at the top corners of the assembly, beneath the top rear cosmetic panel, and lifting.

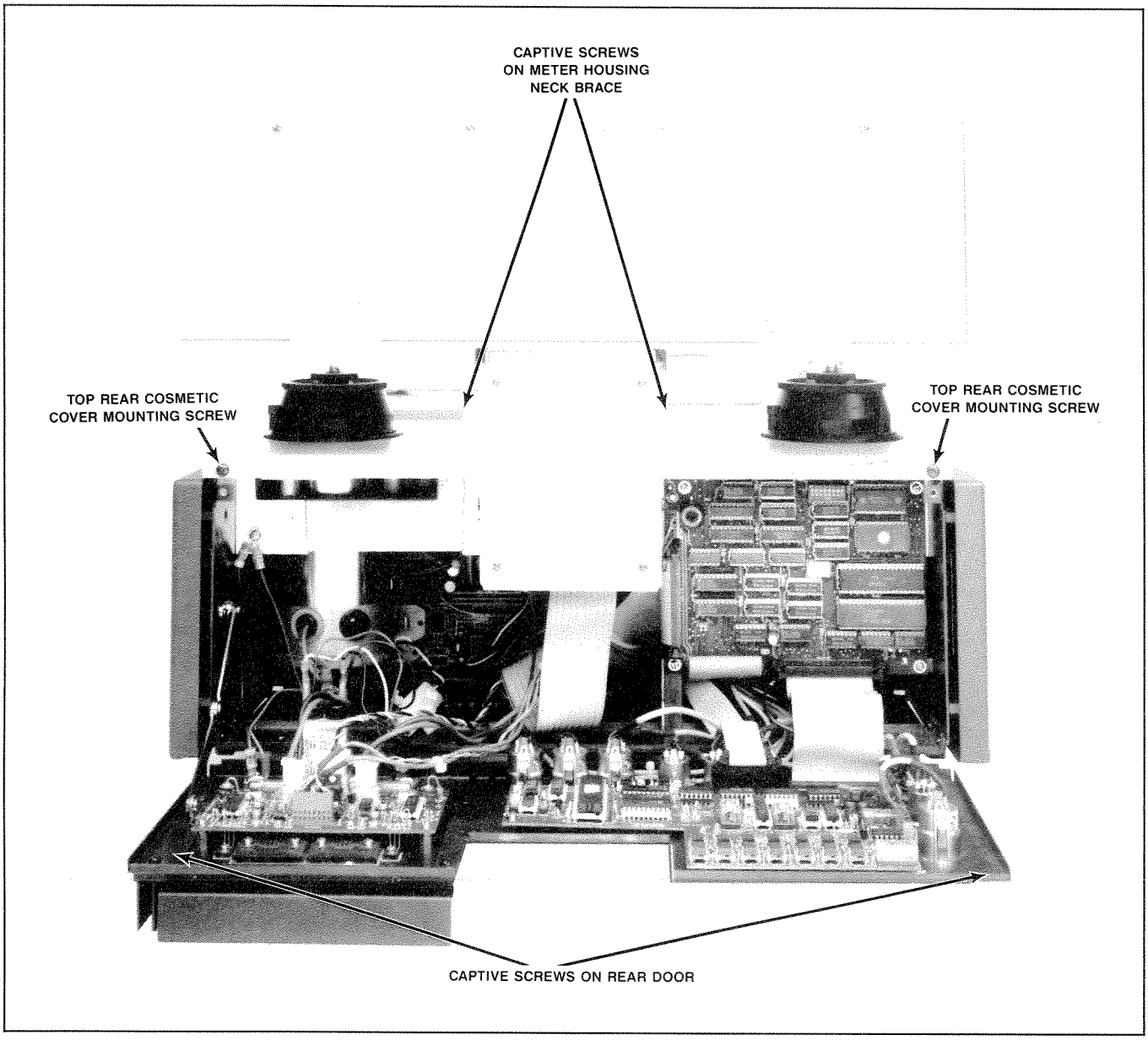

Figure 6-2. Removal of Top Rear Cosmetic Cover

6.5 TRANSPORT ADJUSTMENT PROCEDURES

This section provides all the information required to make a full transport adjustment including the tape path, the static head positioning, and the electronic transport control system.

The mechanical tape path is critical. Tapes recorded on a mis-aligned deck will not playback properly on any other deck. The tape path of the **APR-5000** is relatively stable and rarely requires adjustment under normal use.

The deck has been designed so that adjustment of the tape path is only required when the components have been physically altered (i.e, changed or worn parts), when operated properly, the deck will rarely need adjustment.

Some of the common reasons for making transport adjustments are listed below:

- Tape Walk — Tape rides up and down over the heads.
- Improper Tape Pack — Tape does not pack smoothly on the reel.
- Noisy guides — Tape noise when passing through the tape guides or the roller guides.
- New Headstack — Check the transport adjustments when replacing the headstack with one which has not been adjusted for this machine.
- Tape Handling — Tape is not flowing smoothly (wrinkling or curling) over the guides. (Skewing)
- Repair or Replacement of Parts — If any of the mechanical or electrical components of the tape transport system have been repaired or replaced.

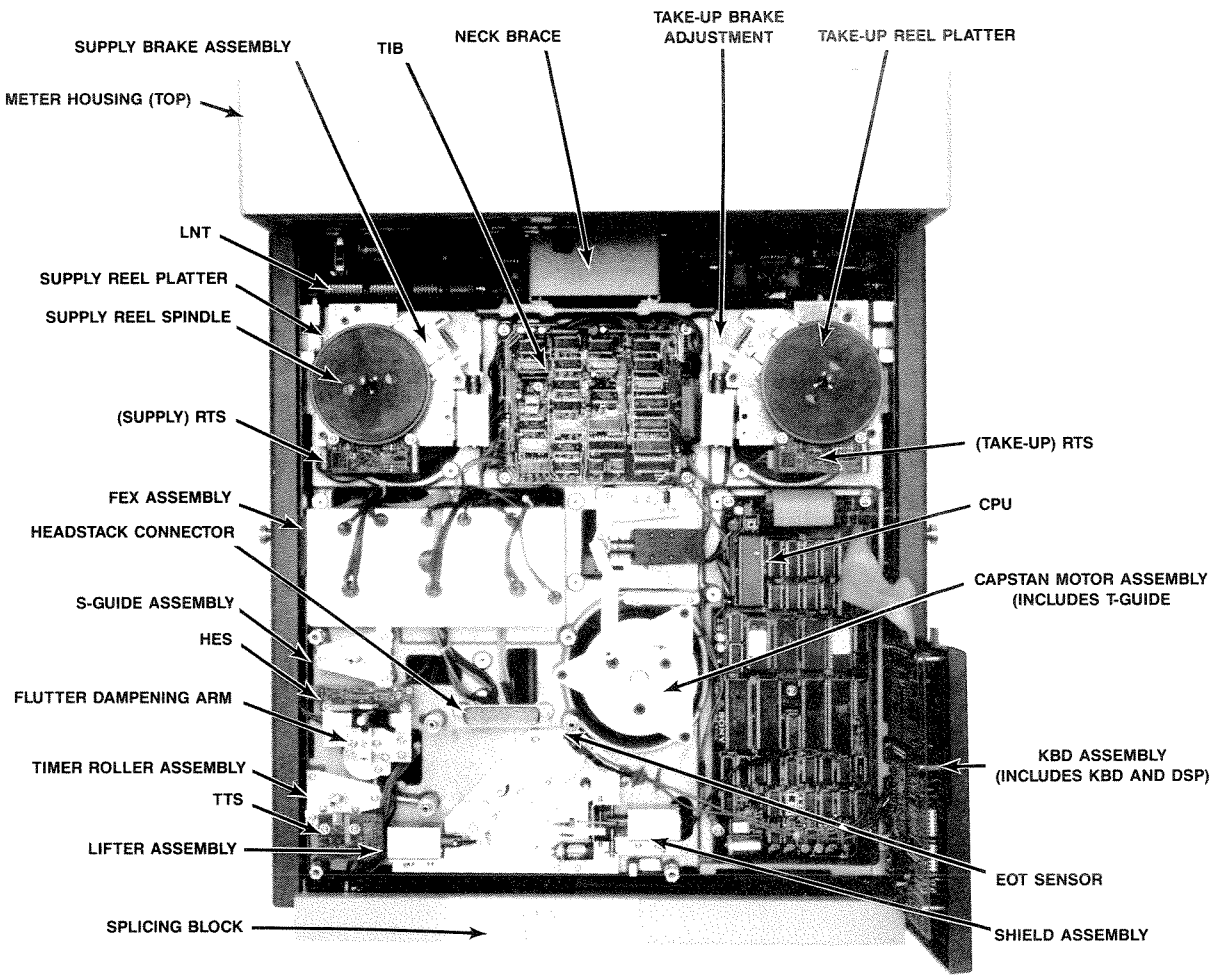

Figure 6-3. Location of Deck Assemblies

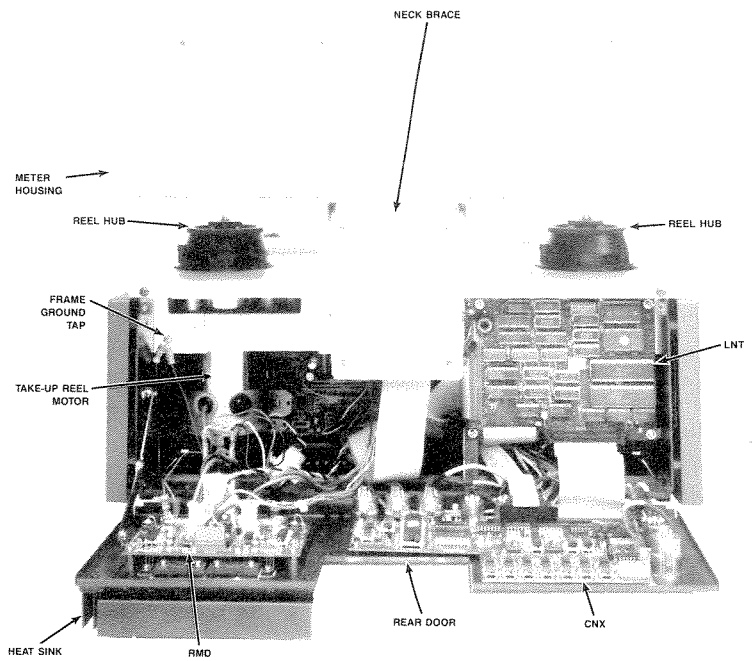

Figure 6-4. Location of Rear Door Assemblies

6.5.1 Cleaning Tape Path

Before beginning the alignment procedure all tape guides and heads should be thoroughly cleaned. This includes the heads and the fast guides. Cleaning fluid or methanol (commercial cleaning alcohol) is applied with foam swabs or photographic grade chamois. Refer to Figure 6-5 for the location of these parts.

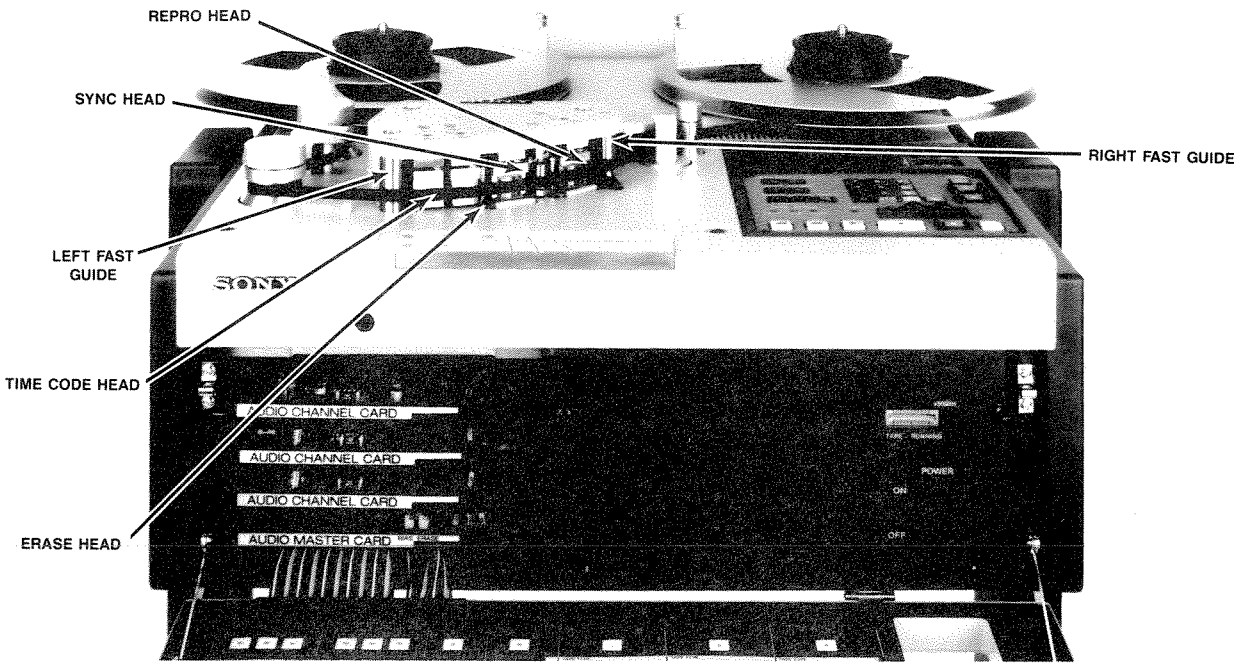

Figure 6-5. Stationary Components of Tape Path

It is not recommended to use cotton balls or cotton swabs to do this cleaning, small strands of cotton may be left behind. Never clean the heads in a vertical (up and down) motion, always clean in the direction that the tape passes over them. It is not recommended to use this cleaning fluid on the pinch roller puck, the capstan shaft, the scrape flutter filter, or the timer roller.

At this time also clean the ceramic capstan shaft and the flutter dampening arm using all-purpose non-detergent household cleaner. (See Figure 6-6.) Apply the cleaner to a lint-free cleaning cloth and then clean the ceramic parts with the moistened cloth. Never apply the cleaner directly to the parts as it may drip into the lubricated bearings and cause advanced wear.

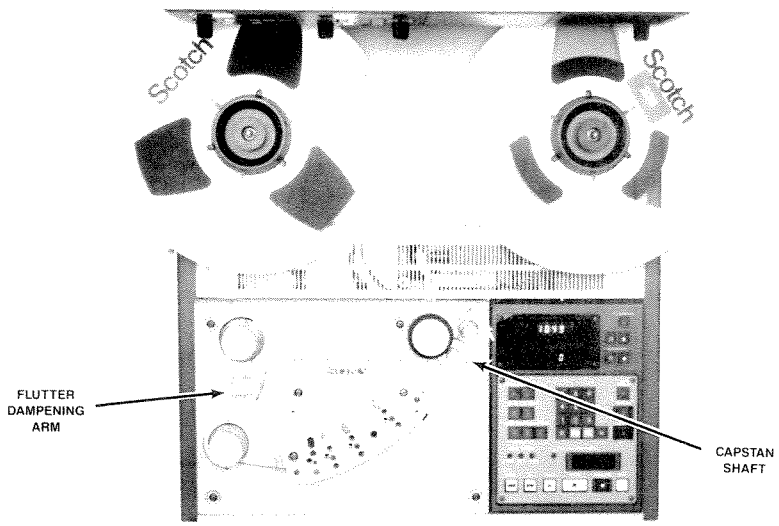

Figure 6-6. Ceramic Components of Tape Path

6.5.2 Demagnetizing The Heads

Heads and tape guides should be routinely demagnetized at regular intervals, (see Table 6-2, Preventive Maintenance); since after a few hours of use it is possible for these surfaces to become slightly magnetized. In extreme cases, a tape passing over a magnetized head or tape guide will be partially erased.

STEP 1 Turn the **APR-5000** power switch OFF.

STEP 2 Starting with the erase head, move the tip of the de-magnetizer as close as possible to the heads (move within 1/16 inch) without actually touching the head surface.

STEP 3 Turn the de-magnetizer power ON.

STEP 4 Slowly move the de-magnetizer away from the heads until it is at a distance of several feet.

STEP 5 Turn the de-magnetizer power OFF.

STEP 6 Repeat Steps 1-5 for the sync head and the repro head.

6.5.3 Cleaning Moving Guides

It is recommended to clean the moving parts of the tape path periodically. Refer to Table 6-2, Preventive Maintenance and Figure 6-7, Tape Path-Moving Parts for these locations.

The S-guide, T-guide, and scrape flutter filter should be cleaned with the same cleaning fluid used for cleaning the heads (methanol or equivalent). It is very important that the cleaning fluid does not enter the bearings. This will wash away the lubrication and cause advanced wear.

When cleaning the scrape flutter filter always use a foam swab which has been slightly dampened by the cleaning fluid and has been allowed to dry for several seconds. For cleaning the timer roller or the pinch roller puck use the all-purpose non-detergent household cleaner used for cleaning the capstan shaft.

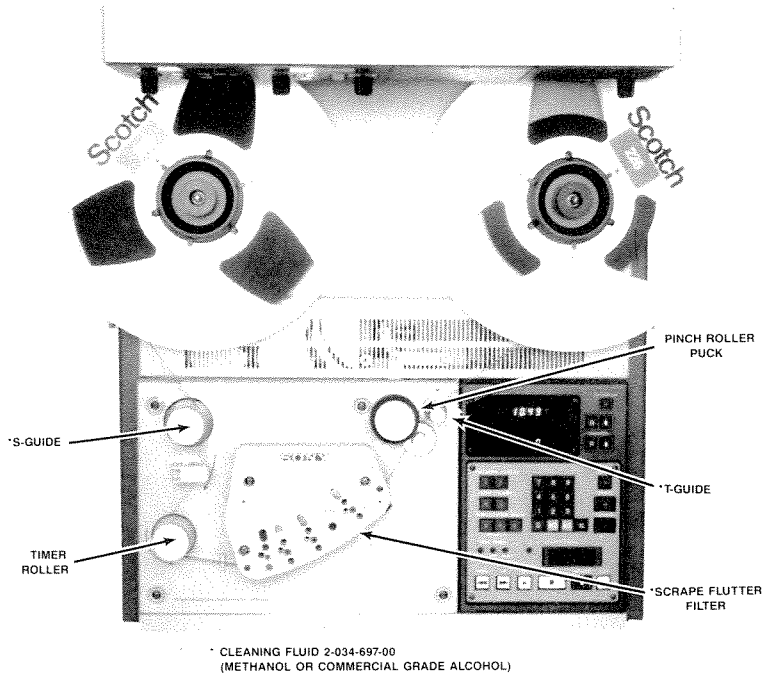

Figure 6-7. Tape Path — Moving Parts

When cleaning these moving parts always apply the cleaning fluid to the cleaning cloth or foam swab rather than applying directly on the parts. Do not use excessive amounts of cleaning fluid. Regular cleaning will prevent the build-up of oxide particles from the tape.

6.5.4 Check the Reel Motor Assemblies

6.5.4.1 Reel Motor Brake Adjustment

Check and adjust the reel motor brake assemblies as necessary.

STEP 1 Remove tape and reels (if any) and turn the power switch off.

STEP 2 Place brake torque hub (#J-6101-430-A) onto supply motor turntable.

STEP 3 Attach a 500g spring scale (#7-732-050-50) to the brake torque hub.

STEP 4 Observe spring scale and pull in a counterclockwise direction. Take reading at average point when the hub starts to turn. Specification is 360g +/–80g.

STEP 5 To adjust brake torque, move spring towards end of bracket (away from motor) to increase brake torque. To reduce brake torque, move in opposite direction. Refer to Figure 6-8-1.

STEP 6 Attach a 200g spring scale (#7-732-050-40) to the brake torque hub.

STEP 7 Observe spring scale and pull in a clockwise direction. Take reading at average point when hub starts to turn.

STEP 8 Verify torque is 80g +/–40g.

STEP 9 Remove brake torque hub from supply motor and install onto takeup motor.

STEP 10 Attach a 500g spring scale to the brake torque hub.

STEP 11 Observe spring scale and pull in clockwise direction. Take reading at average point when hub starts to turn. Specification is 360 +/–80g.

STEP 12 To adjust brake torque, repeat STEP 5.

STEP 13 Attach a 200g spring scale to the brake torque hub.

STEP 14. Observe spring scale and pull in a counterclockwise direction. Take reading at average point when hub starts to turn.

STEP 15 Verify brake torque is 80g +/–40g.

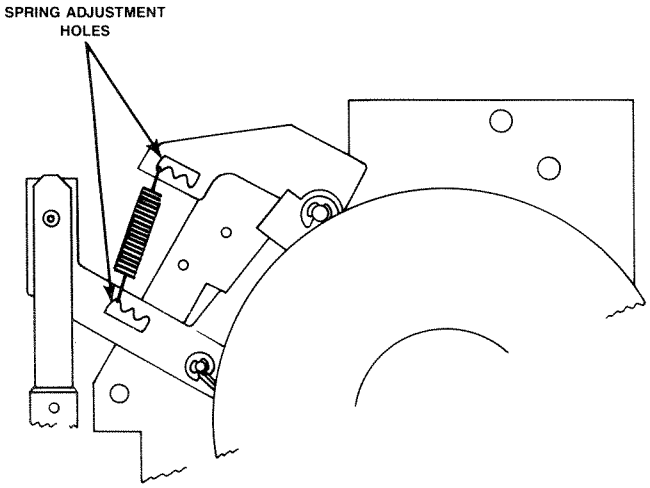

Figure 6-8-1. Reel Motor Brake Assembly Spring Adjustment

NOTE: In case of using the Brake torque hub (#9-911-041-01; 50mm DIA.), you should adjust the brake torque with two times numbers of the above specifications as shown.

360g +/–80g ⟶ 720g +/–160g
80g +/–40g ⟶ 160g +/–80g

6.5.4.2 Reel Table Height Adjustment

STEP 1 Remove upper rear cosmetic panel.

STEP 2 Place the Reel Motor Height Gauge Block on the Reel Motor Mounting Plate (as shown in Figure 6-8-2.)

NOTE: The specification of reel table height states that the distance between the reel hub assembly and the test jig shall be 0. In other words, no gap should be present between the reel hub assembly and the test jig.

STEP 3 If the specification is not met, loosen the set screw with a 2mm hex wrench and adjust height accordingly (Refer to Figure 6-8-2.)

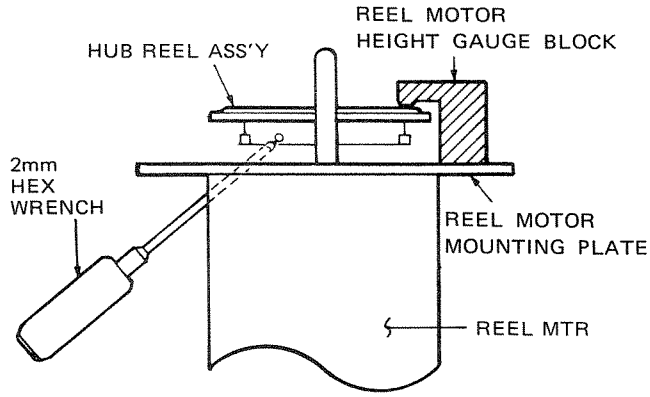

Figure 6-8-2.

6.5.5 Renew Time Meter

When the time meter on the power supply has reached its maximum reading (5000), replace it with a new one or switch the two leads which connect to the time meter. This meter will operate in the reverse direction counting down from 5000 hours to zero. See Appendix C for the Molex pin removal tool number. (See Table 6-2, Preventive Maintenance.)

Procedure to Reverse Time Meter

STEP 1 Open the ALN door and turn the power switch OFF.

STEP 2 Remove the two small screws. The panel is hinged on the bottom.

STEP 3 Follow the two wires which connect to the time meter.

STEP 4 Remove the Molex connector from the CSL and reverse the wires.

STEP 5 Re-install the Molex connector and the hours meter will run in the reverse direction counting from 5000 hours to zero.

STEP 6 Re-install the two screws which attach the front panel of the power supply.

STEP 7 Turn the power switch ON.

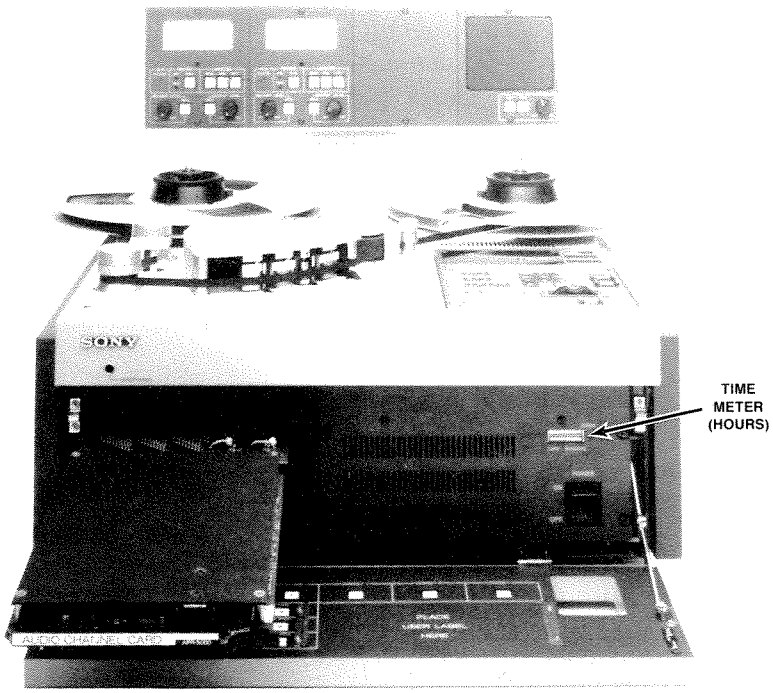

Figure 6-9. Power Supply Time Meter

6.5.6 Head Alignment

In order for the **APR-5000** system to function properly the tape must remain in firm physical contact with the head surface at all times. Even the smallest misalignment may cause errors in level and response that may be incorrectly attributed to the electronics system. The tape must be evenly distributed across the entire head surface when passing across it in PLAY or RECORD mode. If the distribution is not even and the pressure is greater at one edge, this can result in skewing of the tape away from the center of the head.

6.5.6.1 Head Zenith Adjustment

The head zenith is always checked after the head height is adjusted or whenever tape path adjustments have been made. The head zenith is adjusted so that the head surface is parallel to the fixed guides. This adjustment will affect the overall tape path.
The head zenith adjustment is made using the zenith block.

STEP 1 Turn the power OFF. Remove the headstack cover if installed then loosen the three headstack mounting screws using a driver. Remove the headstack from the machine by pulling upward.

STEP 2 Prepare zenith block.

STEP 3 Hold head block unit in hand.
Proceed to Step 10 if mono or 2track configuration.

STEP 4 Place side of zenith block into left tape guide.

STEP 5 Allow other end of zenith block to rest against T.C. (time code) head surface.

STEP 6 Apply light pressure to zenith block with finger at tape guide end.

STEP 7 Position head block unit towards a source of light.

STEP 8 Observe area between zenith block and T.C. head surface (3track only).

STEP 9 Adjust zenith (rear) screw cw or ccw (clockwise or counterclockwise) until no light is visible between time code head surface and zenith block. (Skip Step 10)

STEP 10 Position one end of zenith block to left tape guide and the other end to erase head surface. (Proceed to Step 13).

STEP 11 Position one end of zenith block to TC head and other end to erase head surface.

STEP 12 Apply light pressure to zenith block at T.C. head end. (Skip Step 13).

STEP 13 Apply light pressure to zenith block at tape guide end.

STEP 14 Observe area between zenith block and erase head surface.

STEP 15 Adjust zenith screw cw or ccw until no light is visible between zenith block and erase head surface.

STEP 16 Position one end of zenith block to erase head surface and other end to sync head surface.

STEP 17 Apply light pressure to zenith block at erase head end.

STEP 18 Observe area between zenith block and sync head surface.

STEP 19 Adjust zenith screw of the sync head cw or ccw until no light is visible between zenith block and sync head surface.

STEP 20 Position one end of zenith block to right tape guide and other end to repro head surface.

STEP 21 Apply light pressure to zenith block at tape guide end.

STEP 22 Observe area between zenith block and repro head surface.

STEP 23 Adjust zenith screw of the repro head cw or ccw until no light is visible between zenith block and repro head surface.

STEP 24 Remove zenith block.

NOTE: Any head adjustments performed on time code head stacks will require longitudinal offset readjustment.

STEP 25 Install the headstack on the deck. Use caution when mating the multi-pin connector on the headstack to the socket on the deck as the connector may become damaged by being misplugged. Hand tighten the mounting screws (be careful not to overtighten).

STEP 26 Turn the power on and thread the work tape onto the reels.

STEP 27 Press **PLAY** and observe the head height. The tape must ride between the two grooves machined in the repro or sync head (see Figure 6-10, Repro or Sync Head Height) or equalize the distance Ⓒ and Ⓓ on the erase head (see Figure 6-11, Erase Head Adjustment). If it is not, repeat this procedure until both adjustment specifications have been satisfied.

6.5.6.2 Head Height Adjustment

The head height adjustment is checked when the tape is not centered on the head surface.

Observe the tape movement across the heads. The tape should be centered between the two grooves which are machined into the surface of the head when checking the repro or sync head (see Figure 6-10). When adjusting the erase head make sure that the distance Ⓒ is equal to the distance Ⓓ in Figure 6-11. If adjustments are necessary refer to this procedure.

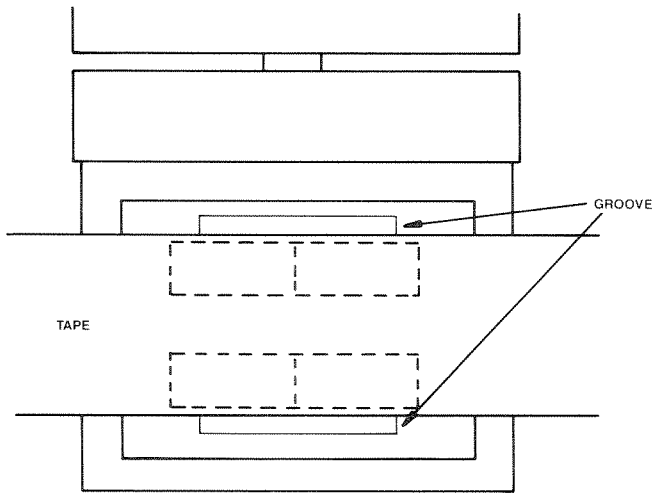

Figure 6-10. Repro or Sync Head Heights

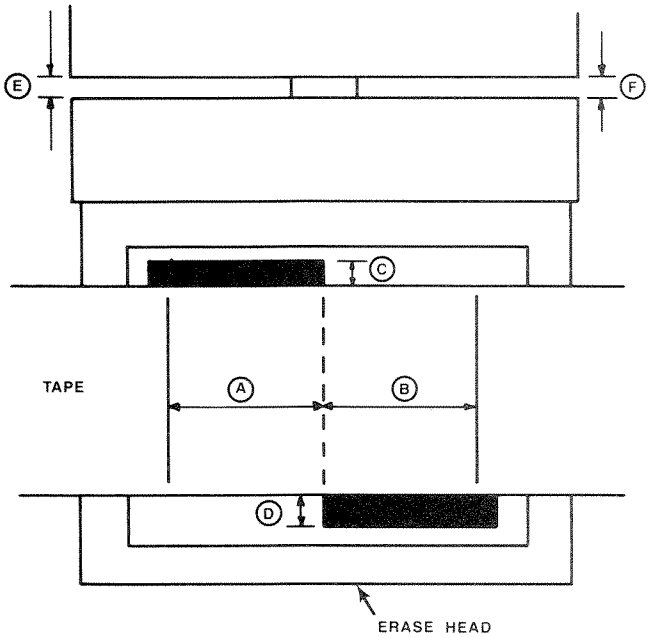

Figure 6-11. Erase Head Adjustments

STEP 1 Turn the height adjustment screw (refer to Figure 6-12) clockwise to raise the head or counter clockwise to lower the head.

NOTE: This adjusts the height of the front of the head only.

STEP 2 Turn the zenith adjustment screw in the same direction to compensate for the tilt created when adjusting the head height. This will adjust the height of the rear of the head.

STEP 3 Turn the azimuth adjustment the same number of turns in the opposite direction to compensate for the tilt created by changing the height.

STEP 4. Always verify the head zenith after adjusting the head height. (Refer to Section 6.5.7 Head Zenith Adjustment.)

STEP 5 Always, verify height adjustment after Zenith adjustment is performed.

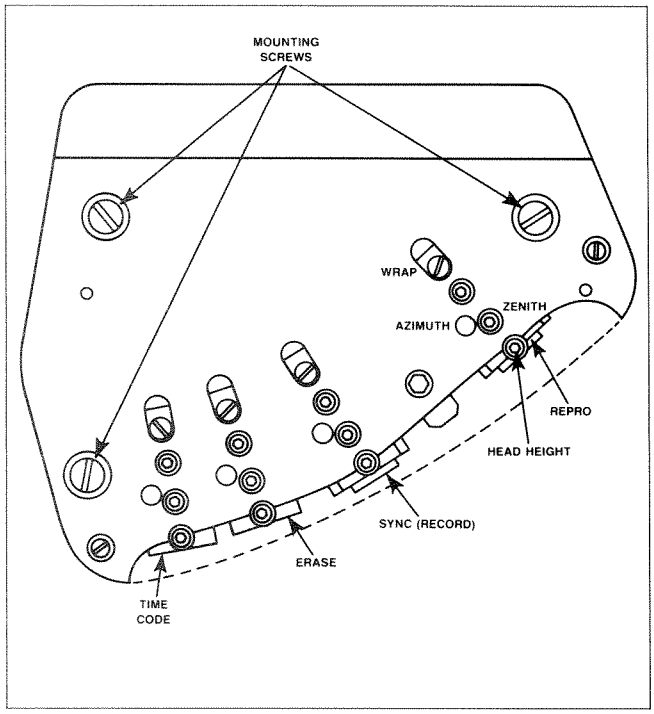

Figure 6-12. Headstack Adjustment Screws

6.5.7 Headstack Identification Code

Before installing the headstack, check that the DIP switch setting on the headstack. Assure that it is valid. (See Figure 6-13, Headstack Identification Codes.)

MONO	2 TK	3 TK	STACK ID
1/4 A	1/4 A	1/4 A	0 0 1
1/4 B	1/4 B	1/4 B	0 1 0
N A	1/4 C	1/2 A	0 1 1
N A	1/4 D	1/2 B	1 0 0
N A	1/2 A	N A	1 0 1
N A	1/2 B	N A	1 1 0

SPEED	1
3.75 — 15	0
7.5 — 30	1

1 2 3 4 5 6 7 8
□ □ □ □ □ □ □ □
— OPEN —

1 = CLOSED
0 = OPEN

TRACK	
MONO	0 0 1
2 TK	0 1 0
3 TK	0 1 1

Figure 6-13. Headstack Identification Code

6.5.8 Reel Tach Sensor (RTS) and Tape Tach Sensor (TTS) Adjustment

The Reel Tach Sensors (RTS) and the Tape Tach Sensor (TTS) should be checked prior to attempting to making adjustments to the tape tension or the Reel Motor Driver offset adjustment. These adjustments cannot be properly done when the RTS or the TTS are out of adjustment.

In this procedure, the output of the tachometer sensor circuits is set to have a 50% duty cycle. These signals are out of phase by 90 degrees (set by the physical dimensions of the sensor IC). In order to access the TIB to measure the tachometer outputs, it is necessary to remove the top rear cosmetic cover. Never thread a standard reproduce reference tape onto the reels with the cosmetic covers removed. The sensor circuits use magnets which can erase the tape if it comes in close contact with it.

STEP 1 Remove the top rear cosmetic cover. Refer to Section 6.4.3.

STEP 2 Turn power ON. Thread the work tape on 7½-inch reels (break the EOT sensor beam).

STEP 3 Connect the ground lead of an oscilloscope to TP1 of the TIB board (mounted between the reel motors). (See Figure 6-3 and 6-15)

STEP 4 Probe IC13 pin 8 with the positive lead of the oscilloscope. (See Figure 6-15.) This is the TTSA signal. Set the oscilloscope uncalibrated sweep so that one cycle of the waveform fills the entire screen.

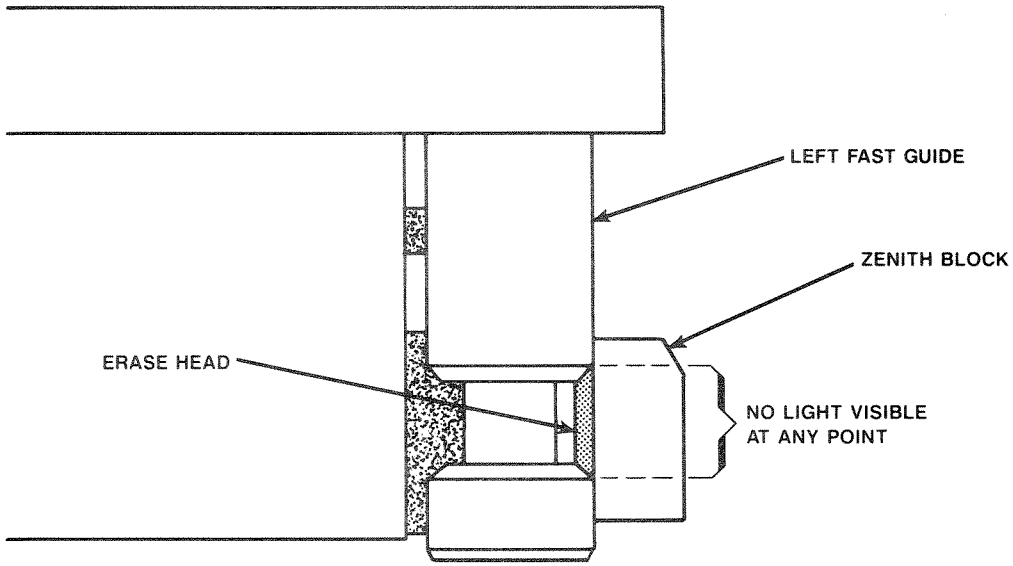

SIDE VIEW

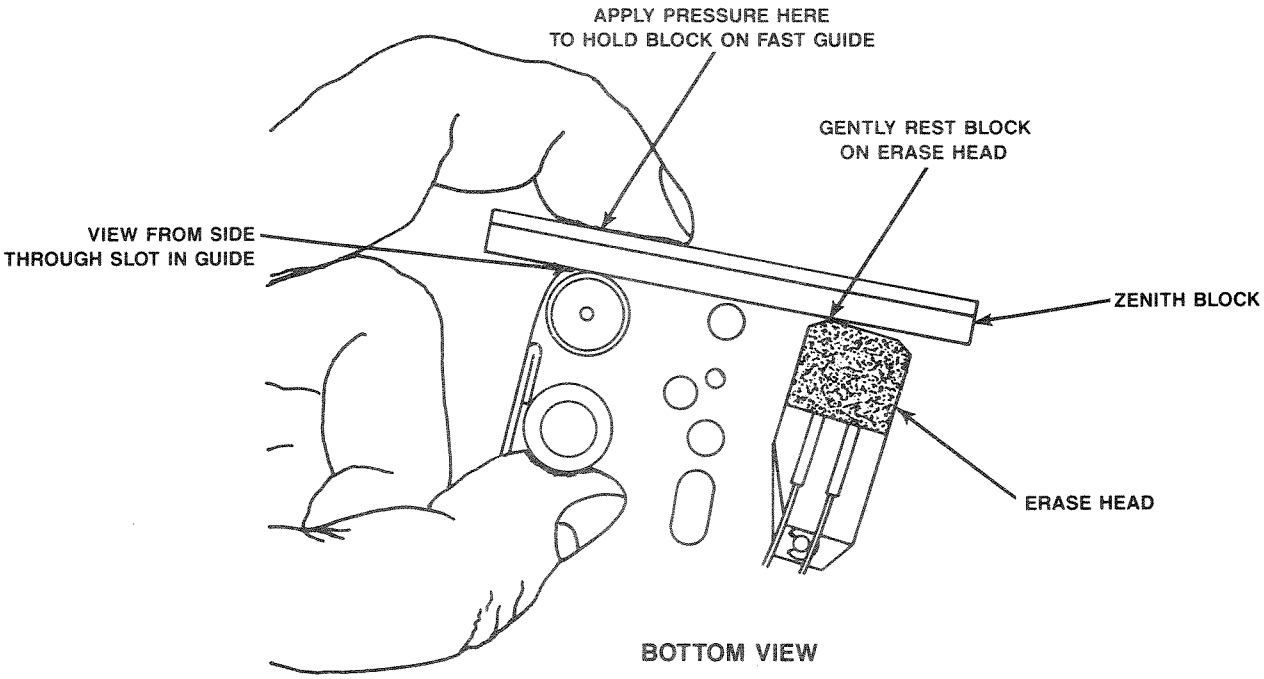

BOTTOM VIEW

Figure 6-14. Erase Head Zenith

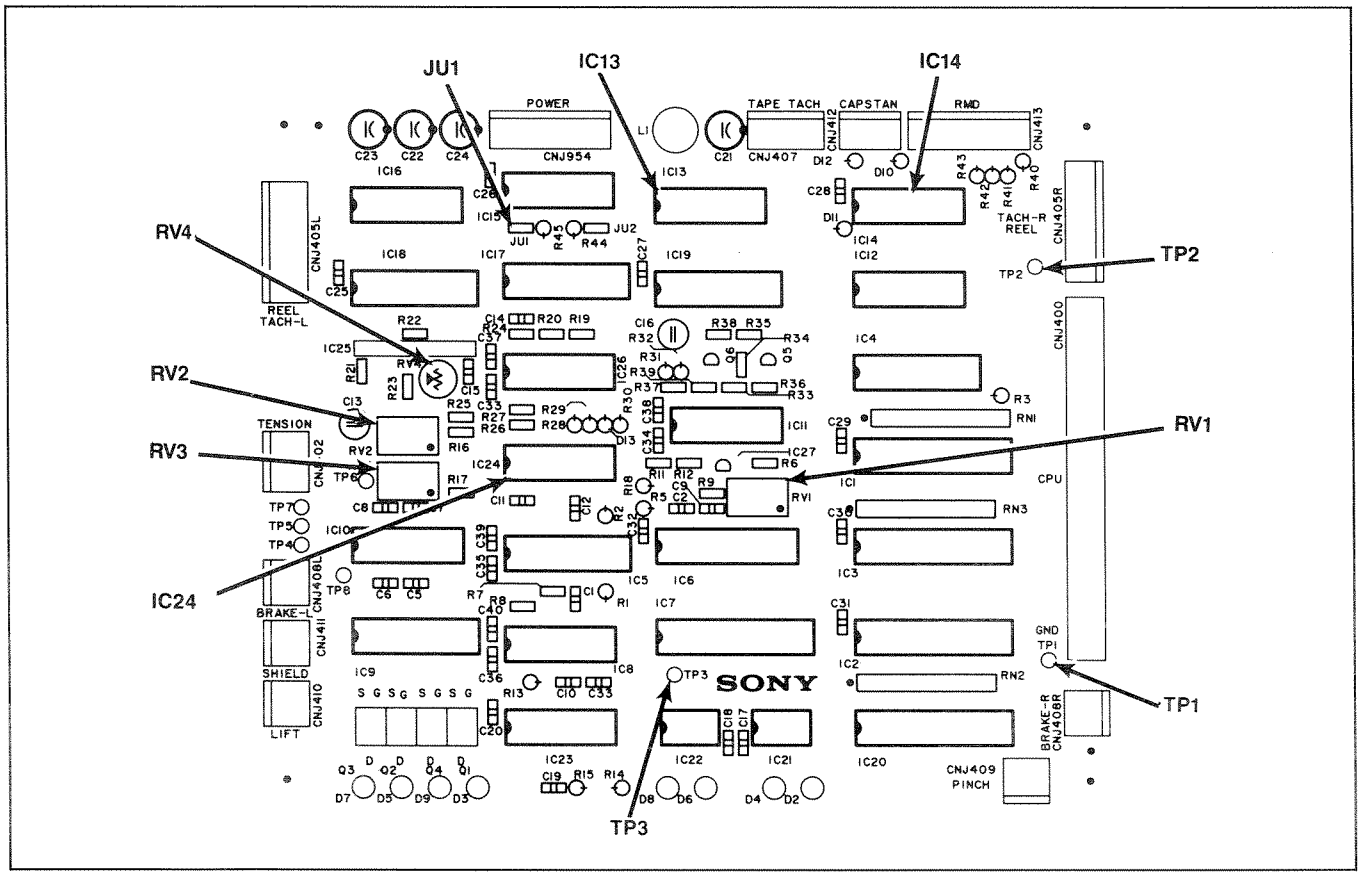

Figure 6-15. TIB PC Board

STEP 5 If the duty cycle is not 50%, it will be necessary to adjust RV1 on the TTS board. (See Figure 6-16.) To access the TTS, it is necessary to remove the top front cosmetic cover (see Section 6.4.2).

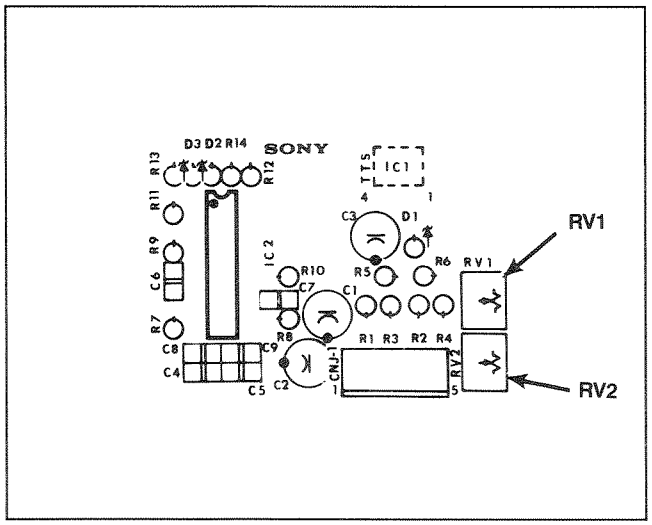

Figure 6-16. TTS PC Board

STEP 6 Probe IC13 pin 10 with the positive lead of the oscilloscope. (See Figure 6-15.) This is the TTSB signal. Set the oscilloscope uncalibrated sweep so that one cycle of the waveform fills the entire screen.

STEP 7 If the duty cycle is not 50%, it will be necessary to adjust RV2 on the TTS board. To access the TTS, it is necessary to remove the top front cosmetic cover if it is not already removed. (See Section 6.4.2.)

STEP 8 Probe IC13 pin 2 with the positive lead of the oscilloscope. This is the supply motor tachometer RTSA signal. Set the oscilloscope uncalibrated sweep so that one cycle of the waveform fills the entire screen.

STEP 9 If the duty cycle is not 50%, it will be necessary to adjust RV1 on the supply RTS board. (See Figure 6-17.)

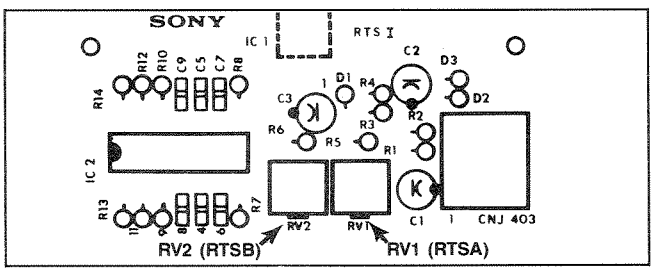

Figure 6-17. RTS PC Board

STEP 10 Probe IC13 pin 4 with the positive lead of the oscilloscope. This is the RTSB signal. Set the oscilloscope uncalibrated sweep so that one cycle of the waveform fills the entire screen.

STEP 11 If the duty cycle is not 50%, it will be necessary to adjust RV2 on the supply RTS board.

STEP 12 Probe IC13 pin 6 with the positive lead of the oscilloscope. (See Figure 6-15.) This is the RTSA signal of the take-up motor tachometer. Set the oscilloscope uncalibrated sweep so that one cycle of the waveform fills the entire screen.

STEP 13 If the duty cycle is not 50%, it will be necessary to adjust RV1 on the take-up RTS board. (See Figure 6-17.)

STEP 14 Probe IC13 pin 12 with the positive lead of the oscilloscope. (See Figure 6-15.) This is the RTSB signal of the take-up motor tachometer. Set the oscilloscope uncalibrated sweep so that one cycle of the waveform fills the entire screen.

STEP 15 If the duty cycle is not 50%, it will be necessary to adjust RV2 on the take-up RTS board. (See Figure 6-17.)

6.5.9 Reel Motor Driver (RMD) Offset Adjustment

The DC offset that the reel motor driver circuitry will have when the reels are at stand-still must be adjusted to be at a minimum level. This is the RMD offset adjustment. This adjustment must always be made prior to setting the tape tension as it will affect the operation of the reel motors.

STEP 1 Remove the captive screws on the top corners of the rear door and open the door (it is hinged on the bottom).

STEP 2 With the machine in EDIT mode and power on, connect a DVM across R22. Ensure that the negative probe is attached to the grounded end of R22, which is closest to the RMD PC board's edge. Refer to Figure 6-18 for the location of R22 and the ground connection.

STEP 3 Set the DVM to read millivolts, and adjust RV2 to a reading of approximately −1 mV. If this reading cannot be obtained, then set RV2 to the full counter-clockwise position.

STEP 4 Move the DVM probes across R46. Ensure that the negative probe is attached to the grounded end of R46, which is closest to the RMD PC board's edge. Refer to Figure 6-18 for the location of R46 and the ground connection.

STEP 5 Adjust RV4 to a reading of approximately −1 mV. If this reading cannot be obtained, then set RV4 to the full counter-clockwise position.

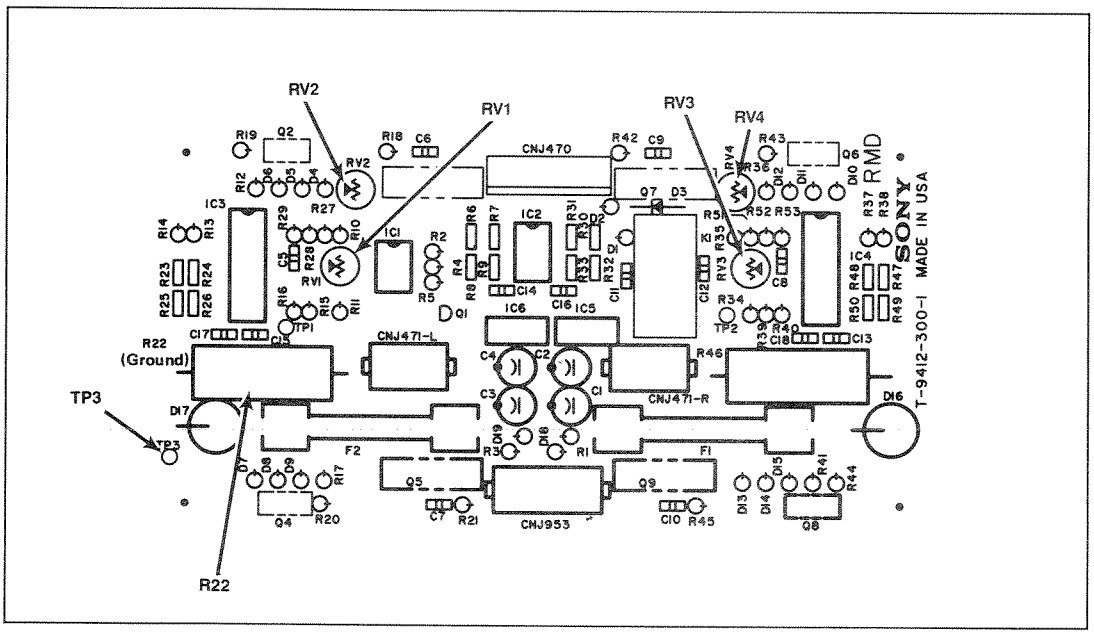

Figure 6-18. RMD Adjustments

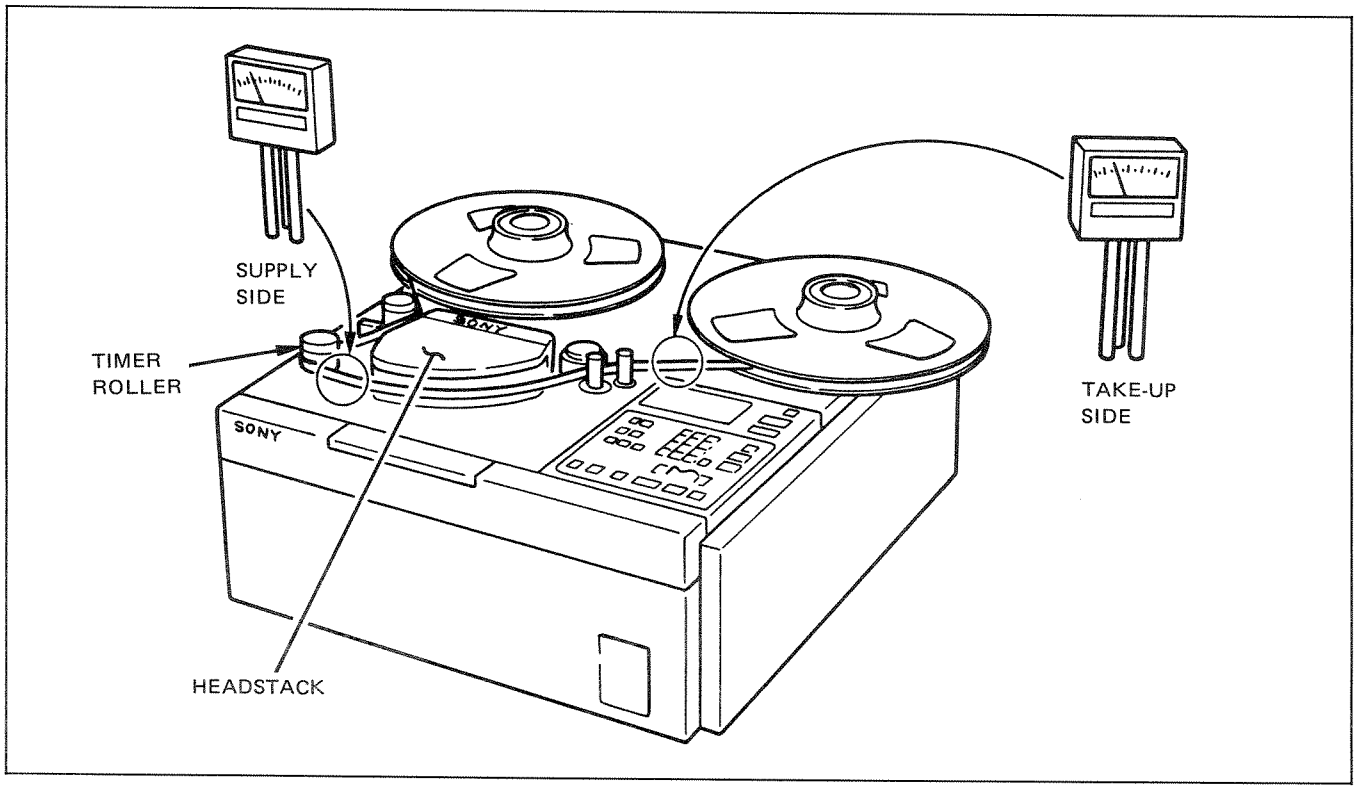

Figure 6-19. Tape Tension Measurement

6.5.10 Tape Tension

The computerized tape tension system ensures that the tension on the tape is kept under 120 grams of tape tension. The mechanical tension on the tape varies with the amount of tape on the reel. The less tape on the supply reel, the tension on the tape would become greater in PLAY mode than it would if the mass of the tape was on the take-up reel. The transport compensates for this so that the tape tension remains constant regardless of where the tape mass is located (supply or take-up side).

Ultimately, this means that the tension must be enough to maintain good tape-to-head contact but not so much that the tape is stretched whether the machine is accelerating to wind speed or decelerating to a stop.

It is recommended to use a work tape for this adjustment.

STEP 1 Unscrew retainer screw on the top corners of the rear door.

STEP 2 Turn power ON. Thread tape onto the **APR-5000**.

STEP 3 Press **PLAY** .

STEP 4 Place the tentelometer between the Timer roller and Headstack (See Figure 6-19.) Adjust RV1 (see Figure 6-18.) on the RMD assembly (rear panel) for 70 grams ± 5 grams.

STEP 5 Place the tentelometer between the capstan motor and the take-up motor. (See Figure 6-19.) Adjust RV3 on the RMD assembly for 120 grams ±5 grams.

6.5.11 Pinch Roller Adjustment

The pinch roller puck pressure rarely needs to be adjusted. In order to check the pinch roller adjustments, the headstack and the top front cosmetic cover must be removed. Do this whenever the capstan motor is replaced or whenever repairs to the electro-mechanical tape path components have been made. Also check the pinch roller puck pressure anytime the tape slips in play mode, play speed flutter is experienced, or the tape path is deviated upon play start-up.

STEP 1 Remove the top rear cosmetic cover (See Section 6.4.3, Removal of Top Rear Cosmetic Cover.)

STEP 2 Turn power ON. Do not put any tape on the reels.

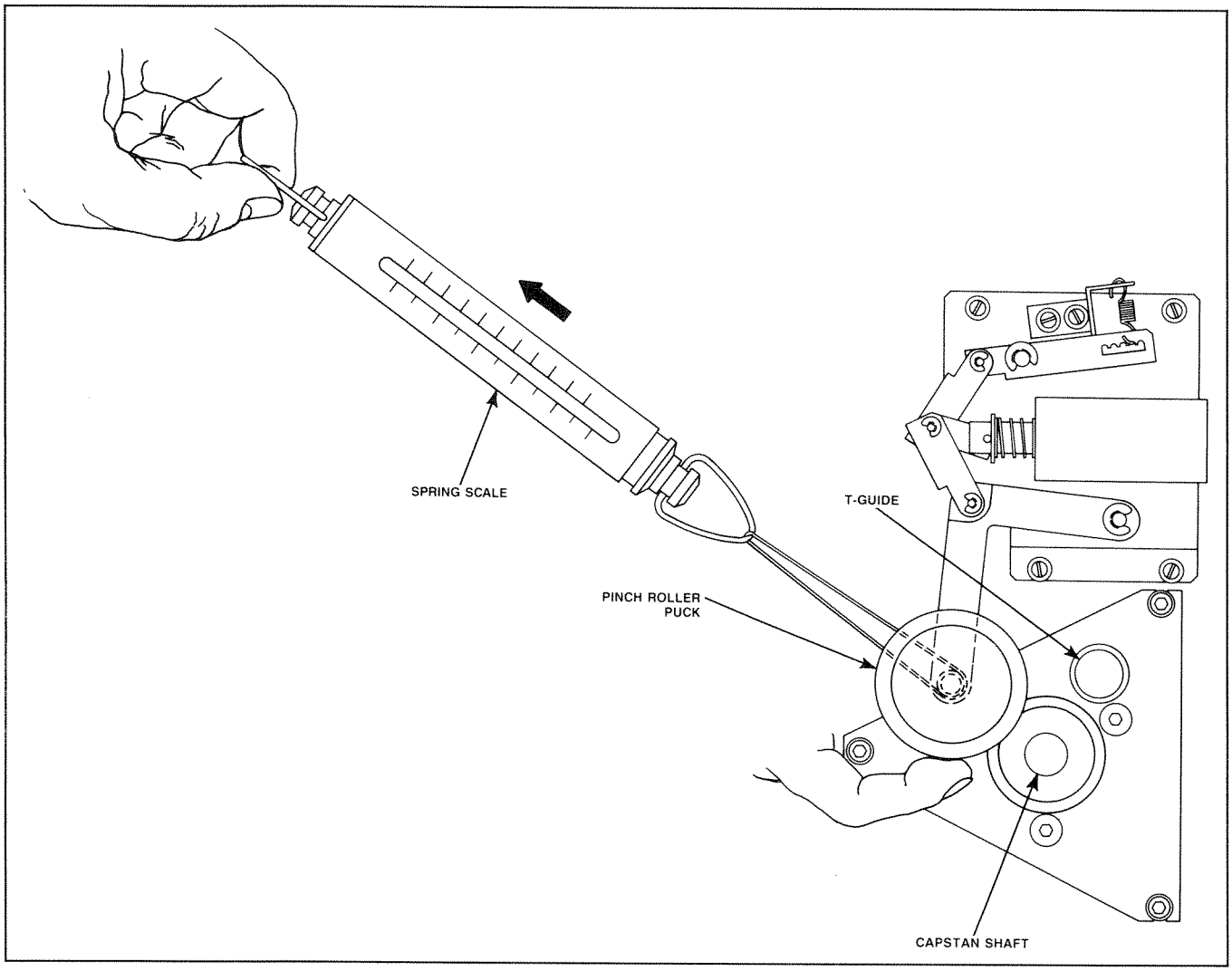

Figure 6-20. Pinch Roller Puck Pressure

STEP 3 Put opaque material over the EOT sensor.

STEP 4 Attach a nylon string from the spring scale to the pinch roller axis shaft.

STEP 5 Press PLAY .

STEP 6 Pull the scale toward the supply reel parallel to the tape transport (see Figure 6-20). Apply pressure lightly to the spinning pinch roller with the forefinger while pulling the spring scale continuously.

STEP 7 Watch the pinch roller while pulling the scale with more force. The scale reading is made at the time when the pinch roller puck stops spinning.

STEP 8 Set the tension spring so that the pinch roller guide pressure is $2.5\text{kg}^{+0.3}_{-0}$ kg (refer to Figure 6-21, Spring Adjustments).

6.5.12 Flutter Dampening Arm Adjustment

The Flutter Dampening Arm rarely needs adjustment. Generally, if it is not centered between its stops during PLAY mode, the adjustment should be checked. Never adjust the flutter dampening arm without first checking the tape tension. Improper tape tension may result in the flutter dampening arm appearing to require adjustment.

STEP 1 Turn power OFF. Remove the top front cosmetic cover (see Section 6.4.2). Locate the Hall Effect Sensor (HES) board between the S-guide and the Timer Roller directly under the flutter dampening arm.

STEP 2 Loosen the HES board mounting screws just enough to allow SLIDING movement of the HES Board on the bracket.

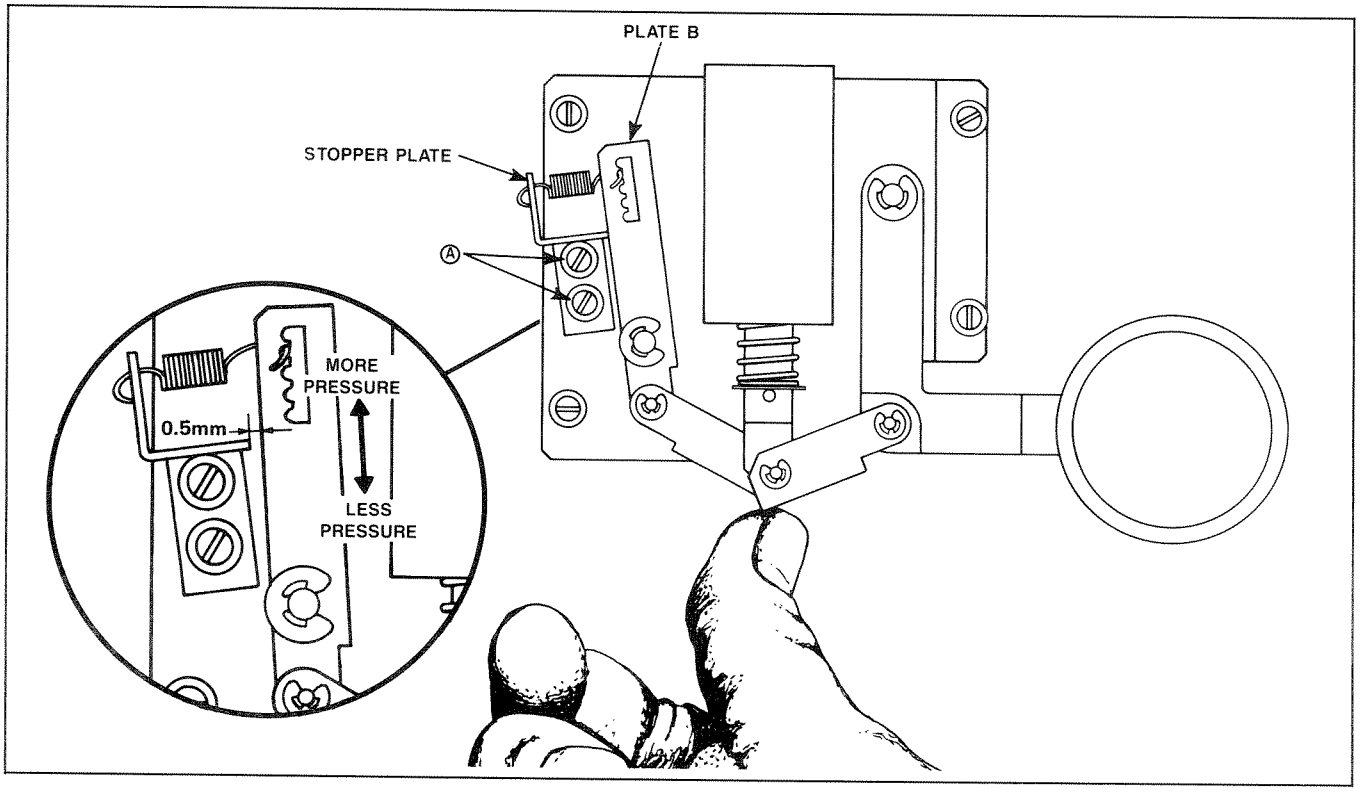

Figure 6-21. Spring Adjustments

STEP 3 Using a digital voltmeter, probe TPA on the HES board. Ground voltmeter at TP2 on TIB (signal ground). (See Figure 6-15.) Turn the power switch ON.

STEP 4 Move the flutter dampening arm to the right until it is on contact with its right side stop (push toward headstack). Check that a minimum reading of +5VDC is obtained.

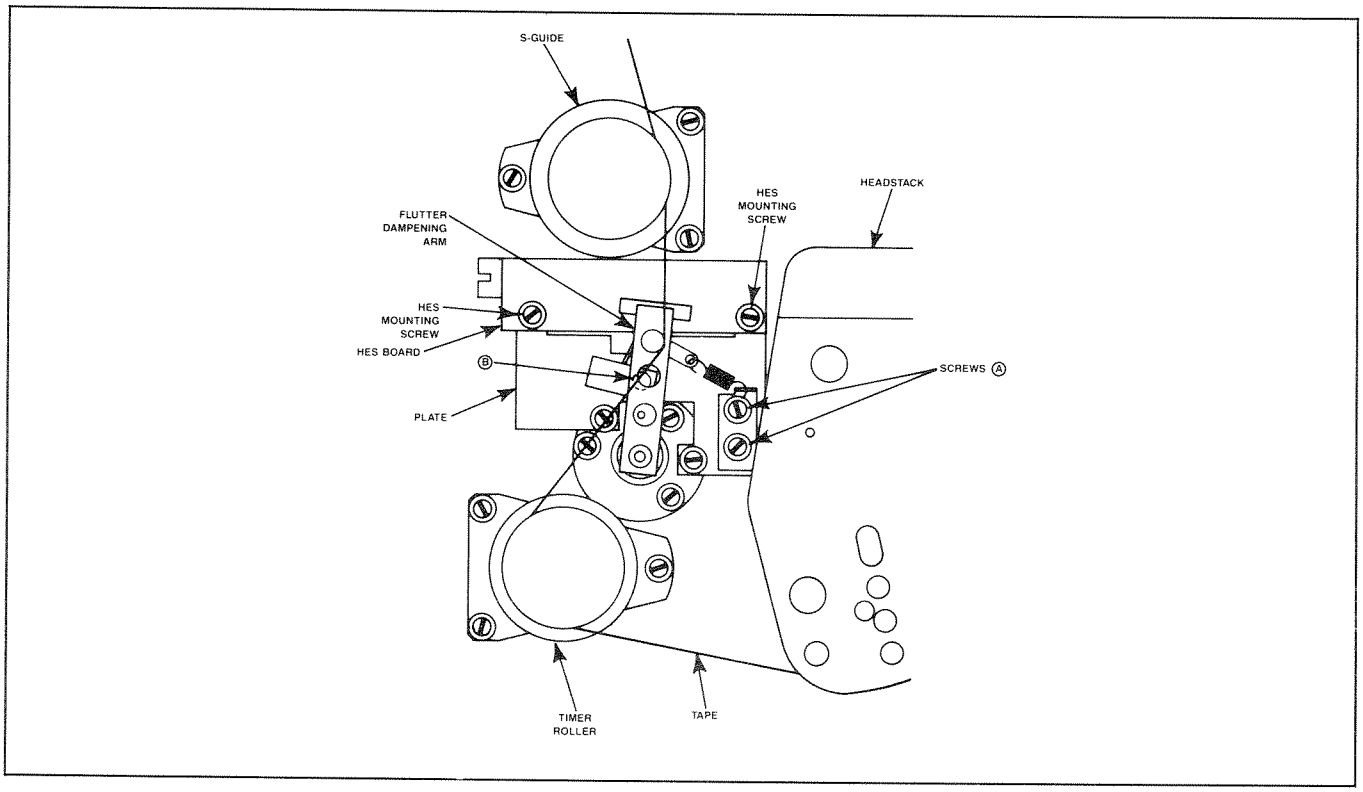

Figure 6-22. Flutter Dampening Arm Adjustment

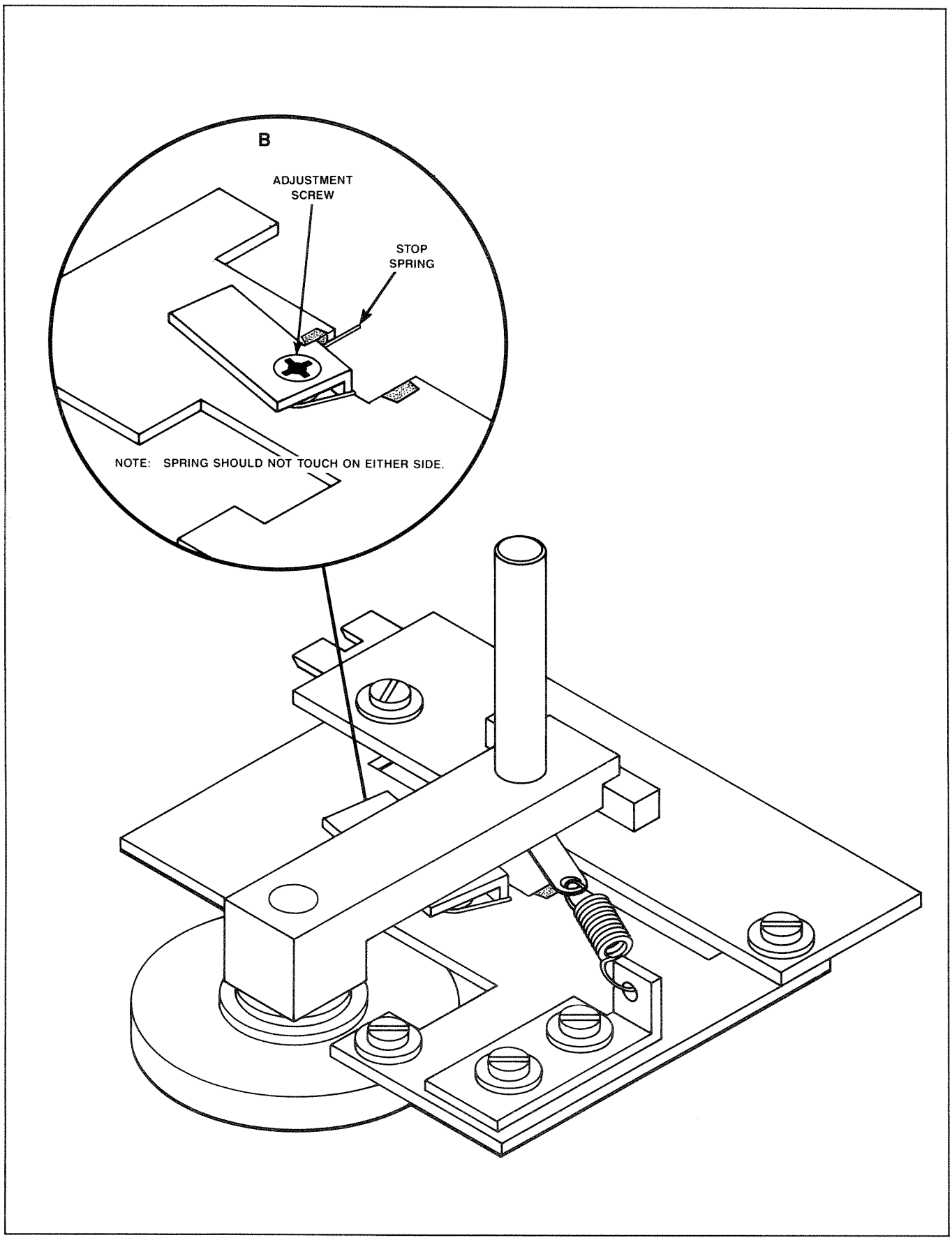

Figure 6-23. Spring Stop

STEP 5 Move the flutter dampening arm to the left until it is in contact with its left stop. Check that a minimum reading of −5VDC is obtained.

STEP 6 Position the HES Board so that the absolute value of voltages obtained at each limit STOP are equal within ±0.5VDC.

STEP 7 Probe TPB on the board with the voltmeter.

STEP 8 Move the flutter dampening arm through its entire range. Adjust RV1 on the HES board so that the voltmeter reading changes 10.25 volts ±0.25VDC.

STEP 9 Move the flutter dampening arm so that it is in contact with its right side stop. Adjust RV2 on the HES board so that the voltmeter reads 0 VDC ±0.25V. Check that voltmeter reading at left limit stop is +10.25V, ±0.25V. Repeat STEPs 8 and 9 if required to meet specifications.

STEP 10 Thread a work tape onto the reels.

STEP 11 Loosen the screws labelled Ⓐ and Ⓑ in Figure 6-22.

STEP 12 Press PLAY . Adjust the spring assembly by plate (secured by screws Ⓐ) so that the flutter dampening arm assembly is parallel with the edge of the HES assembly and there is an equal distance between the assembly and either of the stops. Tighten screws Ⓐ .

STEP 13 Adjust screw Ⓑ to make sure that the bottom of the flutter dampening arm assembly has clearance from the spring (see Figure 6-23).

STEP 14 Press STOP .

6.5.13 Roller Guide Adjustments

The roller guides will rarely needs to be adjusted unless there is repair to any of the mechanical parts or for some reason, the original adjustment of these parts is disturbed. Check the tape path over each of the roller guides referring to Figure 6-24. If the tape is riding smoothly through each of the guides without wrinkling, pinching or noise in FAST FORWARD or REWIND mode, then adjustment is not necessary.

These adjustments are made using the roller guide height adjustment tool.

STEP 1 Remove front top cosmetic cover. (See Section 6.4.2.)

STEP 2 Turn the power ON and thread a work tape onto the reels (refer to Section 5 if unfamiliar with mounting of reels or threading of tape).

STEP 3 Place the machine in FAST FORWARD mode until almost all the tape is on the take-up reel.

STEP 4 Press REW and touch the MVC knob to enter the SPOOL WIND mode.

STEP 5 Observe the tape path over the timer roller. The tape should ride in the center of the guide and no scraping noise should be detectable. Make sure that the tape rides smoothly over the guide by visual inspection (refer to Figure 6-24 Tape Path).

STEP 6 If the tape is riding smoothly over the timer roller, skip STEPs 6 through 12.

STEP 7 Press STOP and unscrew the guide cap.

STEP 8 Attach the roller guide alignment tool (TS-2991-007-02) to the top of the roller guide shaft (be sure to use the correct side for the timer roller) and loosen the adjusting collar set screw with an 1.27mm hex Allen driver.

STEP 9 Press REW and then touch the MVC knob (SPOOL WIND).

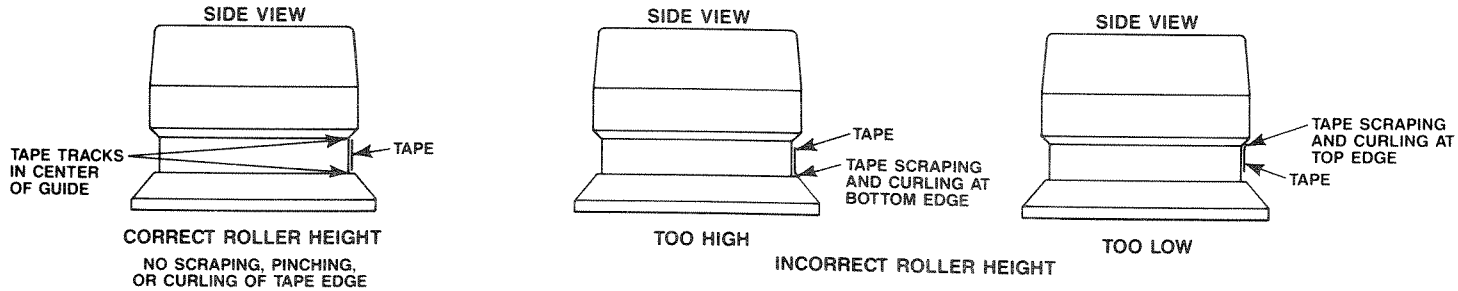

Figure 6-24. Tape Path Over the Roller Guides

STEP 10 Observe the tape path over the roller guide and turn the guide alignment tool clockwise or counter-clockwise until the tape rides in the center of the roller guide and no scraping noise is detectable. Visually inspect that the tape rides smoothly over the roller guide (refer to Figure 6-24 Tape Path).

STEP 11 Tighten the collar adjusting set screw.

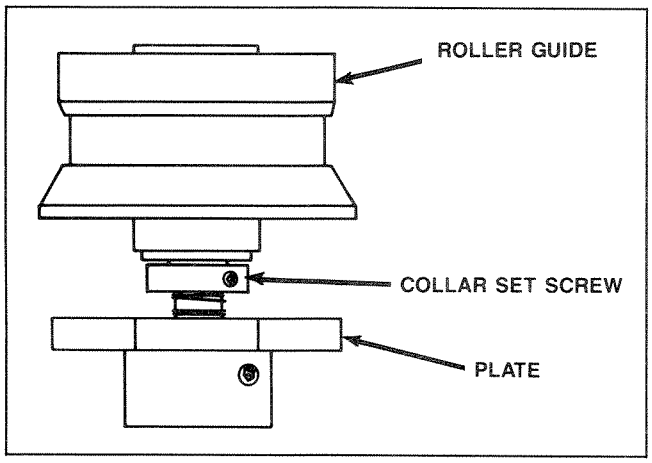

Figure 6-25. Roller Guide Height Adjustment

STEP 12 Press STOP and remove the roller guide alignment tool. Replace the roller guide cap.

STEP 13 Press FFWD and then touch the MVC knob (SPOOL WIND).

STEP 14 Observe the tape path over the S-Roller. The tape should ride in the center of the guide and no scraping noise should be detectable. Make sure that the tape rides smoothly over the guide by visual inspection (refer to Figure 6-24, Tape Path).

STEP 15 If a height adjustment is required then repeat STEPs 6 through 11.

STEP 16 Press REW and touch the MVC knob (SPOOL WIND).

STEP 17 Observe the tape path over the S-guide and the timer roller. No scraping, curling, or pinching should be observed. Re-adjust the timer roller and the S-guide if the tape path is incorrect.

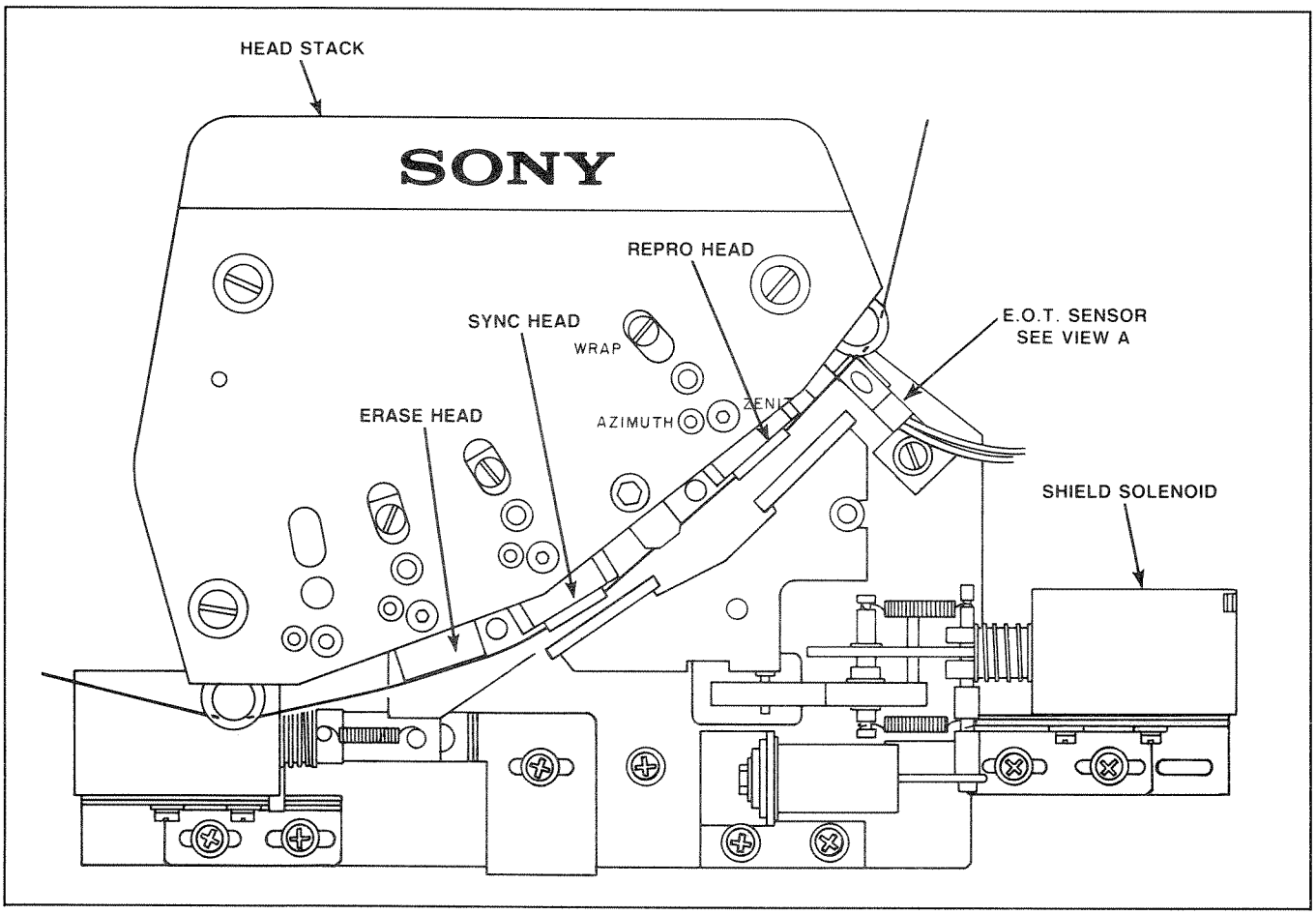

Figure 6-26. EOT Sensor Positioning

STEP 18 Press PLAY and observe the tape path over the T-guide. The tape should track in the center of the T-guide (the same as the S-guide and the timer roller).

STEP 19 If a height adjustment is required then repeat STEPs 6 through 11 using the other side of the same roller guide alignment tool. (The earlier model TS-2991-007-01 can also be used here.)

STEP 20 Press FFWD and touch the MVC knob (SPOOL WIND).

STEP 21 Re-check the tape path over the T-guide and re-adjust if it is incorrect.

6.5.14 End of Tape Sensor Adjustment

The sensitivity adjustment of the End Of Tape (EOT) sensor is left to the discretion of the user. The following procedure should be performed if the transport does not become disabled when there is no tape breaking the EOT sensor beam.

STEP 1 Thread a work tape onto the reels and turn the power switch ON.

STEP 2 Check that the gap between the EOT sensor assembly and the tape is 1mm. If it is go on to STEP 5.

STEP 3 Loosen the EOT sensor mounting screw referring to Figure 6-26.

STEP 4 Slide the EOT sensor assembly until the gap between the sensor and the tape is 1mm. Re-tighten the mounting screw.

STEP 5 Remove the top side cosmetic cover. The EOT adjustment screws are visible from the side of the KBD. (See Figure 6-27.)

STEP 6 Adjust the right side potentiometer RV4 on KBD Board. Place a piece of recording tape breaking the EOT sensor beam. Adjust RV4 to the point that the machine has gone from STOP mode to OFF mode.

STEP 7 Once the point at which the deck goes from STOP mode to OFF mode is found, turn the potentiometer to the left 1/8th turn to take up slack, so that the deck is in STOP mode with tape breaking the EOT sensor.

STEP 8 Remove the tape from the EOT and the deck should go to OFF state (STOP button extinguishes).

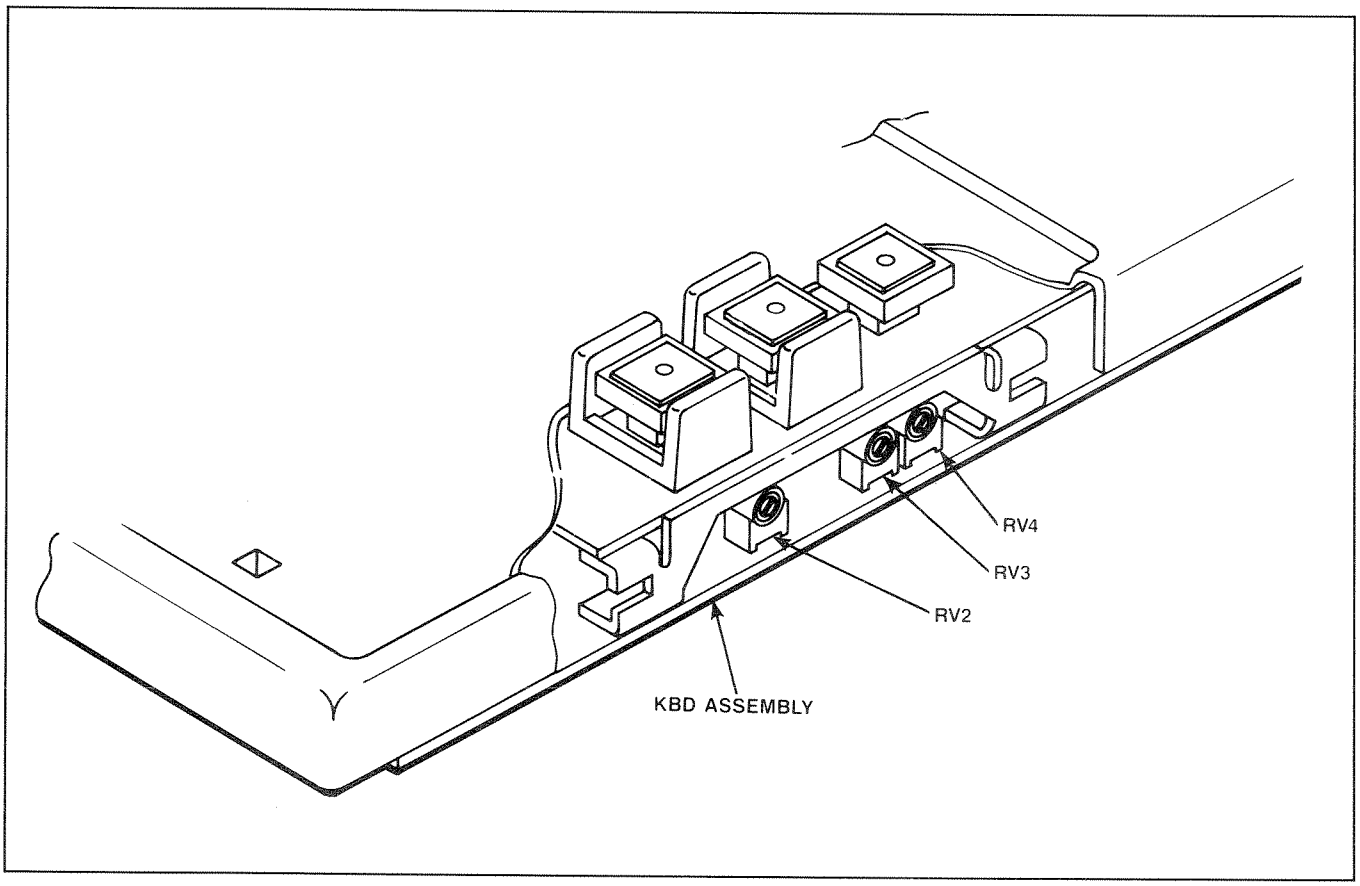

Figure 6-27. KBD Adjustments

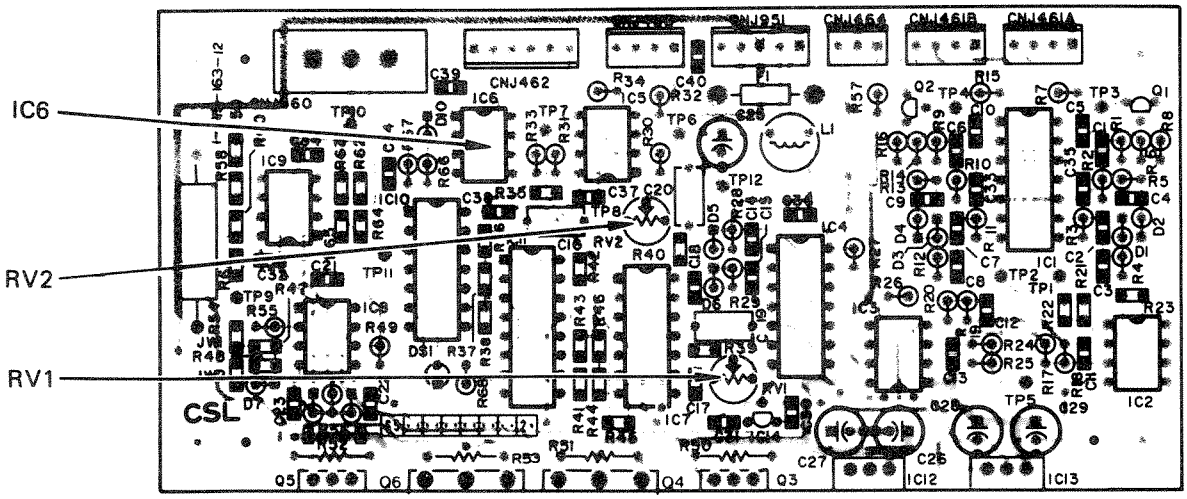

Figure 6-28. CSL PC Board

6.5.15 Flutter Adjustment

The flutter adjustment is very important on any recording deck. When material is recorded on a deck not running at a fixed speed, it will play back on a normal deck too fast or too slow.

The flutter adjustment does not need to be made at regular service intervals. Once set it will only need re-adjustment in the event of a changed part in the electromechanical capstan drive system.

This adjustment requires the use of a storage oscilloscope. It is recommended that only trained service personnel attempt to make this very critical adjustment. The operational characteristics of the machine and interchangability of the tapes may be drastically altered if this is improperly adjusted.

STEP 1 Thread a work tape onto the reels. Turn the power switch ON.

STEP 2 Adjust RV1 on the CSL Board (see Figure 6-28) to the center position and set RV2 to the fully counter clockwise position.

STEP 3 Select LOW SPEED and press PLAY .

STEP 4 Turn RV1 clockwise until the LED pilot lamp (DVI) starts to turn on and off. Turn RV1 counter clockwise until the LED pilot lamp stays off.

STEP 5 Press STOP .

STEP 6 Connect a storage oscilloscope to the CSL board. Connect the ground probe to pin 4 of IC6 and the positive probe lead to pin 1 of IC6.

STEP 7 Set the scope to 1V/div, 0.1 sec/div, prepare for storage operation.

STEP 8 Push PLAY for 3 seconds then STOP .

STEP 9 Read the wave on the oscilloscope for each time. This should be less than 500msec. If it is not, turn RV1 counter clockwise by a small increment. Repeat STEPs 3 and 4.

STEP 10 Set the transport to HIGH SPEED.

STEP 11 Press PLAY .

STEP 12 Turn RV1 clockwise until the LED pilot lamp (DV2) starts to turn on (and off). Turn counter clockwise until the point that the LED pilot lamps stays off.

STEP 13 Push STOP and prepare the oscilloscope for a storage operation.

STEP 14 Push PLAY for 3 seconds then STOP .

STEP 15 Read the wave on the oscilloscope for lock time. This should be less than 500msec. If it is not, turn RV2 counter clockwise by a small increment. Repeat STEPs 9 and 10.

STEP 16 Set the tape speed to LOW SPEED.

STEP 17 Repeat STEPs 9 and 10 for double checking.

6.5.16 Variable Speed Adjustment

The variable speed adjustment is made for two reasons. First, it will center the range of vari-speed play speeds. It is set so that the entire range from +50% of standard speed to −50% of standard speed are available. Second this adjustment is made so the percentage of deviation reading on the LOCATE TIME display is accurate to the actual speed of machine playing.

This adjustment rarely needs to be performed and generally is only done when there have been electrical parts changes in the capstan drive circuitry. In order to check that the adjustment is properly done, it is necessary to play back tones from the standard reproduce reference tape, measuring the frequency of the tones played back at variable speed to ensure that the frequency is deviated by the percentage shown in the LOCATE TIME display. Monitor the LINE OUT connector of an audio channel with a frequency counter.

STEP 1 For this adjustment it is necessary to gain access to the TIB board. (See Figure 6-3.) Remove captive screws on top corners of the rear door. (See Figure 6-2.)

STEP 2 Thread a work tape onto the reels and turn the power switch ON. Make sure that the machine is in STOP mode.

STEP 3 Probe TP3 on the TIB (see Figure 6-15) with a voltmeter and check that the A/D, D/A reference voltage at TP3 is −10.24VDC. If it is skip STEP 4.

STEP 4 Adjust RV1 on the TIB so that the voltage at TP3 is −10.24VDC.

STEP 5 Turn the power switch OFF and disconnect JU-1 (see Figure 6-15) on the TIB.

STEP 6 Turn the power switch ON.

STEP 7 Press the STOP button.

STEP 8 Connect a frequency counter to IC24 pin 7 on the TIB. Check for 14.4kHz reading on the frequency counter. If the reading is 14.4kHz skip STEP 9.

STEP 9 Adjust RV2 on the TIB for a reading of 14.4kHz on IC24 pin 7.

STEP 10 Press the STOP button again.

STEP 11 Connect a frequency counter to the same IC24 pin 7 on the TIB. Check for 28.8kHz reading on the frequency counter. If the reading is 28.8kHz skip STEP 12.

STEP 12 Adjust RV3 on the TIB for a reading of 28.8kHz on IC24 pin 7.

STEP 13 Turn the power switch OFF and re-install JU-1 on the TIB.

STEP 14 Make sure that all channels are in SAFE mode (RECORD READY buttons extinguished). Thread the standard reproduce reference tape onto the reels and locate the 1kHz tone.

STEP 15 Play the 1kHz tone at standard speed (VARI-SPEED OFF), measuring 1kHz on the frequency counter. Press VARI so that the button flashes and press 5 , 0 , 0 on the Transport Control Panel. Press VARI so that the button illuminates and press PLAY .

STEP 16 Play the 1kHz tone ensuring that the reading on the frequency counter is 1.5kHz.

STEP 17 Press VARI twice so that the button flashes and press +/− on the Transport Control Panel. Press VARI so that the button illuminates and press PLAY .

STEP 18 Play the 1kHz tone ensuring that the reading on the frequency counter is 500Hz.

STEP 19 If there is a problem in STEPs 16 or 18, remove the standard reproduce reference tape and re-adjust starting on STEP 1.

6.5.17 MVC Adjustments

The MVC knob rarely requires readjustment. The only adjustment which can be made is the MVC centering. If when the knob is touched at its (mechanical) rest position the tape starts to shuttle in either direction, then the MVC analog voltage will have to be adjusted.

STEP 1 Thread a work tape onto the reels and turn the power switch ON.

STEP 2 Press the MVC knob without moving it. The transport should no longer be in STOP mode and the MVC indicator LED should be illuminated.

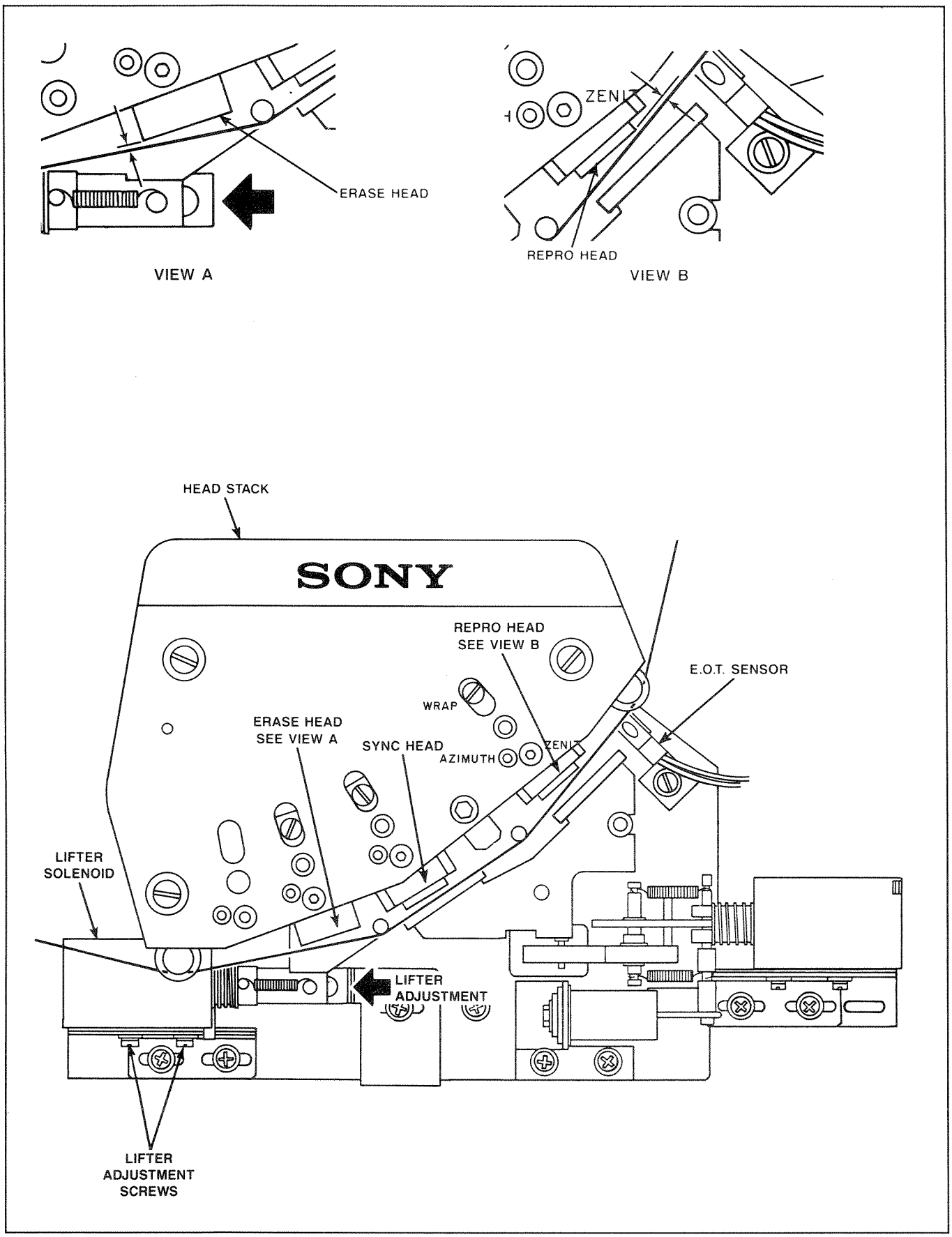

Figure 6-29. Lifter Adjustment

STEP 3 The tape should not move within the free allowance of the mechanical return spring.

STEP 4 It is necessary to gain access to the KBD by removing the top rear cosmetic cover (see Section 6.4.3.) and remove the screws which secure the KBD assembly. Lift the KBD assembly from the deck.

STEP 5 Adjust RV2 so that the tape does not move when the MVC is touched with the free allowance of the mechanical return spring. Refer to Figure 6-27 for the location of RV2 on the KBD.

6.5.18 Tape Lifter Adjustment

The tape lifters do not need to be adjusted at regular service intervals. The only time the adjustment should be attempted is when the lifters do not properly remove the tape from the heads during a FAST WIND mode or if the lifter movement is not smooth (causing the tape to be mishandled when the lifters engage).

STEP 1 Thread a work tape onto the reels and turn the power switch ON.

STEP 2 Check that the gap between the play head and the tape is 1mm. If it is go on to STEP 5.

STEP 3 Loosen the tape lifter plunger mounting screws. Push the plunger piece toward the ball as shown in Figure 6-29.

STEP 4 Slide the plunger assembly until the gap between the play head and the tape is 1mm. Re-tighten the mounting screw.

STEP 5 Press FFWD or REW and observe that the tape is not touching any of the heads.

NOTE The tape will be very close to touching the erase head.

STEP 6 If the tape is touching any of the heads re-adjust the lifter assembly as necessary.

6.6 AUDIO SYSTEM PLAYBACK CALIBRATION

This section contains the procedures required to set the heads and make a full playback alignment of the **APR-5000**. In order to achieve optimum results, a good standard reproduce tape should be used. Use these procedures to: calibrate the machine when calibrating for a new headstack; check the present playback levels, or when alternatives to the alignments stored in memory are desired. Connect test equipment as shown in Figure 6-30 (See Section 3.5, Calibration Connectors for wiring connectors.)

The audio playback alignment is made using a test tape as a reference. The head is positioned so that it has the most amount of output when the test tape is played back. The head is also positioned so that the outputs from the two tracks are in phase.

The other alignments are made using the Alignment Control Panel (ALN). These involve setting the frequency response of the tones played through the repro head and the sync head. The test tapes are full-width

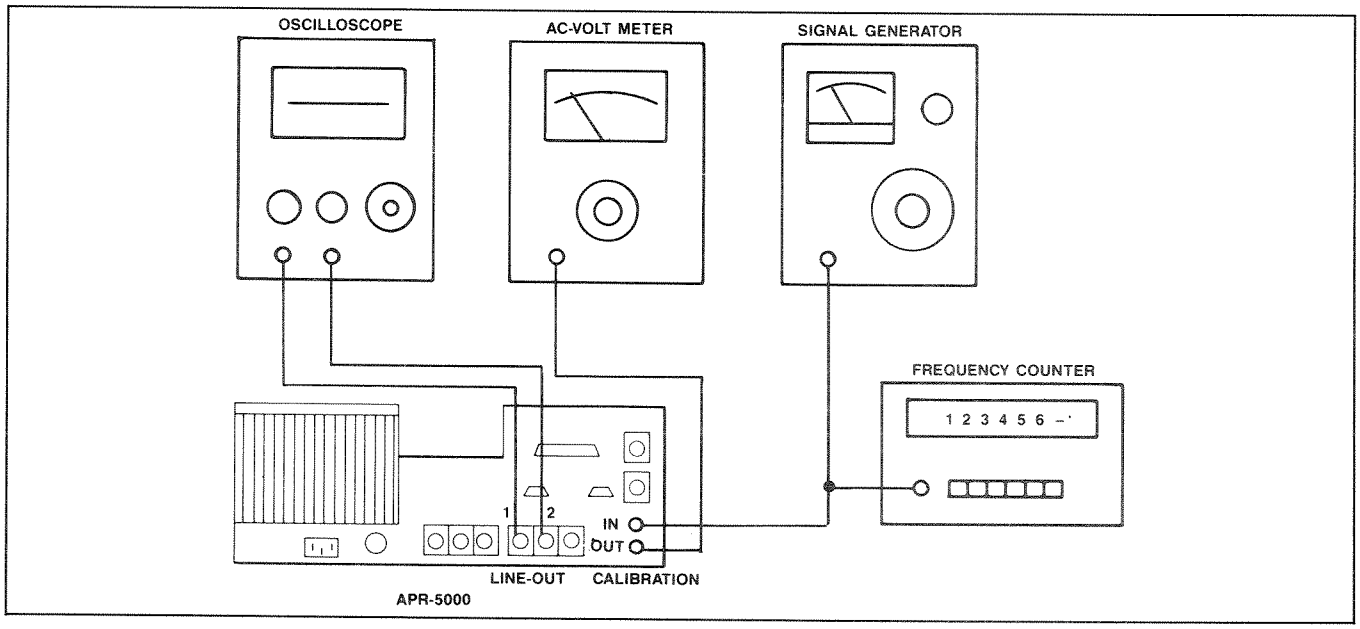

Figure 6-30. Connection of Test Equipment

recorded, elevated level (250nWb/m) alignment tapes. Test tapes of different reference fluxivities can be used where desired. There are two considerations to keep in mind when these tapes are used as an alignment reference.

1. High frequencies on alignment tapes are subject to self-erasure losses. Expect the high frequency tones to diminish in amplitude with age.

2. Since these tapes are full-width recorded, at frequencies below 500Hz the signal in the guard bands (the un-recorded area between the tracks on the tape) is read by the head. This fringing effect plus the phantom gaps due to the geometry and construction of the head make the low frequency response appear to vary when it is in fact flat.

6.6.1 Head Azimuth and Head Wrap Adjustments

In Section 6.5, procedures were given to adjust the heads in relationship to the tape path (head height and the head zenith). The following procedures are given for adjusting the head wrap and the head azimuth. These adjustments will not affect the overall tape path across the headstack but they will perform fine adjustments of the audio response of the heads in regard to playback levels and phase relationship.

Azimuth adjustments are especially important. If the head gap is not parallel to the direction the tape is traveling, segments of the same recorded wave length will enter and leave the gap at different increments of time. The head azimuth adjustment performs the fine adjustment of the phase relationship between the two outside tracks of a multi-track head. It is adjusted for the minimum phase difference between the channels.

The head wrap adjustment is an eccentric mounting screw which controls the position of the head gap in relationship to the tape which is entering or leaving the head surface. The audio level peaks (achieves maximum playback amplitude) when the gap is located in the exact center of the angle at which the tape touches the head an equal distance on each side of the gap.

These adjustments are not necessary unless tape path adjustments have been made or the headstack is being used for the first time on this machine. If the headstack is being used on the machine for the first time, verify the head height and head zenith adjustments. The head azimuth and head wrap adjustments are made using a high speed reproduce reference tape. Make sure that the tape is the appropriate one for high speed.

STEP 1 Turn the power switch ON.

STEP 2 Select HI SPEED on the **APR-5000** transport.

STEP 3 Thread the standard reproduce reference tape onto the reels.

STEP 4 Make sure that no channels are in RECORD READY mode (All channels SAFE). If the RECORD READY button is illuminated press it and it will extinguish.

STEP 5 All channels must be in REPRO. If the MONITOR REPRO button is not illuminated for any channel, press the MONITOR REPRO button.

STEP 6 Check to make sure all channels are in CAL mode. Press the UNCAL buttons so they are extinguished.

STEP 7 Locate the 10kHz tone on the repro tape and place the machine in PLAY mode by pressing the PLAY button.

STEP 8 Adjust the REPRO head wrap for a peak reading on the VU meter (or on the AC voltmeter connected to the LINE OUT or CALIBRATION OUT). Refer to Figure 6-12 for the location of the adjustment screws.

STEP 9 Adjust the front screw (azimuth) for maximum signal level so that there is minimum phase difference between Channel 1 and Channel 2. This can be done with the CALIBRATION OUT signal by adjusting for maximum amplitude out. It can also be done the conventional method connecting each of the channel LINE OUT to the oscilloscope.

STEP 10 Press STOP .

STEP 11 Press the SYNC for each channel. The REPRO button will extinguish and the SYNC button will illuminate.

STEP 12 Repeat STEPs 6 through 8 adjusting the sync (cue) head.

STEP 13 Readjust the wrap adjustment screw on the erase head if necessary to equalize the tape contact widths between point Ⓐ and point Ⓑ . Refer to Figure 6-11. Adjust so that Ⓐ and Ⓑ are equal.

STEP 14 Press PLAY .

STEP 15 Readjust the head height adjustment screw on the erase head to equalize the head core width if necessary. Adjust so that Ⓒ and Ⓓ of Figure 6-11 are equal.

STEP 17 Press STOP .

NOTE:

By connecting the test equipment as shown in Figure 6-30, the technician can take advantage of the CAL IN and CAL OUT connectors on the rear door. These connectors allow for the automatic connection of the proper channel output to the AC voltmeter. This saves time compared to the conventional method requiring the connection and reconnection of the audio oscillator and the AC voltmeter during the course of an alignment calibration. Since the output from the CAL OUT connector is the summed output of both channels when ALL tracks are selected, this output can also be used for setting the phase relationship of the two channels (when a dual trace oscilloscope is not connected).

6.6.2 Setting Equalization Standard

Before making any adjustments it is desirable to select the equalization standard to be used for this alignment. Check to see which button is illuminated in the EQ STD section of the ALN. If the desired button is not illuminated, press the ALL button in the Track Selector section then press the desired EQ STD button.

6.6.3 Repro Level Calibrations

The Repro level adjustments are made using the high speed reproduce reference tape. This will set the reproduce circuitry output level to be 0 VU when the 1kHz tone is played from the tape at the 0 VU reference fluxivity level. Make sure the appropriate tape for high speed is used, that the secondary gap compensation functions are properly set for the headstack being used, and that the meter calibration is correct for the operating level used in this studio (refer to Section 3.9 Meter Calibration).

STEP 1 Turn the power switch ON. Press HI SPEED on the Alignment Control Panel (ALN).

STEP 2 Locate the 1kHz tone on the reproduce reference tape.

STEP 3 Select track 1 by pressing IND until the Status Display reads "1' and press PLAY .

STEP 4 Select LEVEL in the Repro section on the Alignment Control Panel.

STEP 5 Press INC or DEC in Calibration section for a 0 VU on the panel meter.

STEP 6 Select track 2 by pressing IND until the Status Display reads "2". Repeat STEPs 4 and 5.

STEP 7 If performing a complete alignment at this time, then it would save time to skip Section 6.6.4 Repro High Frequency and go on to 6.6.5 Sync Level Alignment. The order in which these two steps are performed is not important and the sync alignment uses the same 1kHz tone on the reproduce reference tape.

HELPFUL HINT

It is important to make sure that only the 1kHz tone is used throughout this test. This will require rewinding several times during the course of the test.

Store the position where the 1kHz tone begins into memory location 28 and the position where the 1kHz tone ends into memory location 29. By pressing REPEAT the machine will automatically LOCATE to the start of the 1kHz tone and PLAY until the tone is finished and will continue to do so until STOP is pressed. If you are not familiar with the REPEAT function, see the flowcharts at the end of SECTION 5.

This practice can save time when it is necessary to use specific tones from the reproduce reference tapes.

6.6.4 Repro High Frequency Alignment

The Repro high frequency alignment is made using the high speed reproduce reference tape. The reproduce high frequency equalizer output to be 0 VU when a 10kHz tone is played back from the test tape at reference fluxivity. Make sure the appropriate test tape for high speed is used. The gap compensation functions must be properly set for the headstack being used.

STEP 1 Turn the power switch ON. Press HI SPEED on the Alignment Control Panel (ALN).

STEP 2 Locate the 10kHz tone on the reproduce reference tape.

STEP 3 Select track 1 by pressing IND until the Status Display reads "1".

STEP 4 Select H.FREQ in Repro section of the ALN.

STEP 5 Press INC or DEC in the Calibration section for 0 VU on the panel meter.

STEP 6 Locate the 1kHz tone on the reproduce reference tape and make sure that the panel meter still reads 0 VU. If it does not, press the LEVEL button in the Repro section of the ALN and repeat STEP 5.

STEP 7 Locate the 10kHz tone on the reproduce reference tape and make sure that the panel meter still reads 0 VU. If it does not, press the H.FREQ button in the Repro section of the ALN and repeat STEP 5.

STEP 8 Repeat STEPs 6 and 7 until both conditions are met.

STEP 9 Select track 2 by pressing IND until the Status Display reads "2". Repeat STEPs 4 through 8.

6.6.5 Sync Level Alignment

The Sync level alignment is made using the high speed reproduce reference tape. This is done to set the sync playback output level to 0 VU when a 1kHz tone is played through the sync heads at reference fluxivity. Make sure the appropriate test tape for high speed is used, that the gap compensation functions are properly set for the headstack being used, and that the meter is calibrated for the appropriate 0 VU level (refer to Section 3.9 Meter Calibration).

STEP 1 Turn the power switch ON. Press HI SPEED on the Alignment Control Panel (ALN).

STEP 2 Locate the 1kHz tone on the reproduce reference tape.

STEP 3 Select track 1 by pressing IND until the Status Display reads "1".

STEP 4 Select LEVEL in the Sync section on the Alignment Control Panel.

STEP 5 Press INC or DEC in Calibration section for 0 VU on the panel meter.

STEP 6 Select track 2 by pressing IND until the Status Display reads "2". Repeat STEPs 4 and 5.

6.6.6 Sync High Frequency Alignment

The sync high frequency alignment is made using the high speed reproduce reference tape. The sync high frequency equalizer output is set to have a 0 VU output when a 10kHz tone is played from a test tape at reference fluxivity. Set the sync level (Section 6.6.5) prior to setting the sync high frequency alignment.

STEP 1 Turn the power switch ON. Press HI SPEED on the Alignment Control Panel (ALN).

STEP 2 Locate the 10kHz tone on the reproduce reference tape.

STEP 3 Select track 1 by pressing IND until the Status Display reads "1".

STEP 4 Select H.FREQ in Sync section of the ALN.

STEP 5 Press INC or DEC in the Calibration section for 0 VU on the panel meter.

STEP 6 Locate the 1kHz tone on the reproduce reference tape and make sure that the panel meter still reads 0 VU. If it does not, press the LEVEL button in the Sync section of the ALN and repeat STEP 5.

STEP 7 Locate the 10kHz tone on the reproduce reference tape and make sure that the panel meter still reads 0 VU. If it does not, press the H.FREQ button in the Sync section of the ALN and repeat STEP 5.

STEP 8 Repeat STEPs 6 and 7 until both conditions are met.

STEP 9 Select track 2 by pressing IND until the Status Display reads "2". Repeat STEPs 4 through 8.

STEP 10 If the Repro high frequency alignment has not been performed it should be done now. (Refer to Section 6.6.4 at this time.)

6.6.7 Reproduce Frequency Response Verification

The frequency response tests are done using the high speed reproduce reference tape. The purpose of this test is what the output level of the reproduce circuitry and the sync playback circuitry will be when tones of different frequencies are played at reference fluxivity. Theoretically, the response should be flat for all frequencies in the audible range. The results of these

tests are directly related to the test tape used. If the tape has had excessive use, the high frequency tones may be degenerated by as much as 2dB. This must be taken into account when performing this procedure. Make sure the appropriate tape for high speed is used.

The results of the test will indicate whether a full re-alignment of the playback circuitry is required or not. Generally a full re-alignment will not be necessary when working from a valid alignment unless the reference fluxivity level is changed.

STEP 1 Turn the power switch ON. Press the HI SPEED button on the Alignment Control Panel (ALN).

STEP 2 Locate the 10kHz tone on the reproduce reference tape.

STEP 3 Select track 1 by pressing IND until the Status Display reads "1".

STEP 4 Select H.FREQ in Sync section of the ALN.

STEP 5 Press INC or DEC in the Calibration section for 0 VU on the panel meter.

STEP 6 Locate the 1kHz tone on the reproduce reference tape and make sure that the panel meter still reads 0 VU. If it does not press the LEVEL button in the Sync section of the ALN and repeat STEP 5.

STEP 7 Locate the 10kHz tone on the reproduce reference tape and make sure that the panel meter still reads 0 VU. If it does not press the H.FREQ button in the Sync section of the ALN and repeat STEP 5.

STEP 8 Repeat STEPs 6 and 7 until both conditions are met.

STEP 9 Select track 2 by pressing IND until the Status Display reads "2". Repeat STEPs 4 through 8.

STEP 10 Play back the various tones on the test tape. Ensure that the panel meter does not read more than ^{S}0.75dB or ^{1}2dB.

STEP 11 Repeat STEPs 2 through 10 for using the Repro section of the ALN.

NOTE:

When all the adjustments have been made and verified, it is a good idea to note on the user label the reference fluxivity and the equalization standard.

6.6.8 Storing Alignments to PRESET Memory

Store alignments in Preset memory location number 1. This is done by pressing and holding the CONTROL button and then pressing the STORE button at the same time. Press PRESET I to store information.

BE SURE TO STORE ALL ALIGNMENTS BEFORE CHANGING SPEEDS OR POWER DOWN

6.6.9 MID and LOW Speed Alignments

All the alignment made to this point have all been done for high speed. Likewise, these alignments will have to be made for mid and low speeds using the appropriate test tapes.

STEP 1 Select MID SPEED and load the appropriate standard reproduce reference tape for mid speed. Repeat 6.6.2 through 6.6.8 for mid speed. When using speeds of 7.5 ips or less, the levels will be −10dB below 250nWb/m. For ease in proceeding in the alignment calibration see the helpful hint below.

STEP 2 Select LOW SPEED and load the appropriate standard reproduce reference tape for low speed. Repeat 6.6.2 through 6.6.8 for low speed with the exception that Input and Repro/Sync levels are −10dB below O VU. 10kHz sync low speed is 2dB lower than all other levels (2dB less than other low speed settings and 12dB down from mid and hi settings).

HELPFUL HINT

Whenever it is necessary to test at −10dB (or −12dB) there is an easy method of aligning for 0 VU on the panel meter using the UNCAL knob. With an audio oscillator or a function generator connected, press the INPUT MON LVL button. Set the output level on the audio oscillator or function generator so that the panel meters read 0 VU).

Set the output level on the function generator or audio oscillator so that the panel meter reads −10dB. Now press the OUTPUT UNCAL button (it will illuminate) and set the vernier control until the panel meter reads 0 VU. Make all the alignments to 0 VU indication on the panel meter (which will actually be −10dB).

ALN selected will automatically cancel UNCALs for safety reasons be sure to RESET them as needed.

6.7 AUDIO SYSTEM RECORD CALIBRATION

This section contains the procedures required to make a full audio alignment of the **APR-5000**. Use these procedures to calibrate the machine when using: A new type of tape. Calibrating for a new headstack. Or when alternative to the alignments stored in memory are desired. It is a good idea to work from an existing alignment if at all possible. This way the adjustments will be close to being correct making it easier and quicker to align.

CAUTION:

The tape used for the record calibration will be the deciding factor of how the alignment is set. Never use old tapes to set the record calibration. This may result in an alignment which is not optimum for the type of tape being used. The tape should be fully erased, free from splices, and the tape type and formulation should be written on the user label for future reference.

NOTE: Check Section 6.8 Secondary Record Compensations, to ensure that they are properly set.

Once the heads have been properly positioned and aligned for a flat playback response, the record system must also be aligned so that signals recorded by the machine will also be played back with a flat frequency response characteristic. There is an extremely complicated relationship between bandwidth, distortion, tape velocity, and the amplitude of the bias signal recorded on the tape.

This relationship varies for tapes of alternate formulations and will be different for the same tape when aligned in different ways. When aligning the audio, the calibration is made such that the optimum levels of bias frequency, high and low equalization, and output provide the greatest high frequency range with the lowest third order harmonic.

The amount of record level determines the fluxivity level of the signal recorded on the tape. The amount of fluxivity will affect the harmonic distortion.
The amount of bias is determined by increasing the bias signal until the high frequency record response is attenuated. For this reason, it is called overbias. The point to which the overbias is set will vary with alternate tape formulations, from headstack to headstack, and at different speeds. This causes some difficulty when selecting the best overbias setting.

For general purpose operation, it is recommended to select an overbias setting that both preserves the high frequency response and provides the lowest distortion in the peak program area (a level that the program material does not attain on a regular basis). It may be advantageous to record some types of program material at fluxivities that provide more high frequency loss and a lower distortion.

6.7.1 Record Level/Bias Level Alignment

The RECORD LEVEL alignment is made to set the amplitude of the program material signal which is recorded on tape. The BIAS LEVEL adjustment is made to set the amplitude of the bias signal which is intermixed with the program material signal so that it can be recorded on tape. (See Figure 6-31.) Generally the bias level setting is referred to as overbias because the amplitude of the bias signal is set to create a loss of a few dB at the high frequency range.

These adjustments are interactive and are critical in obtaining optimum recordings from the **APR-5000**.

STEP 1 Turn the power switch ON and thread the recording tape. Make sure the tape is fully erased (see the CAUTION note in Section 6.7).

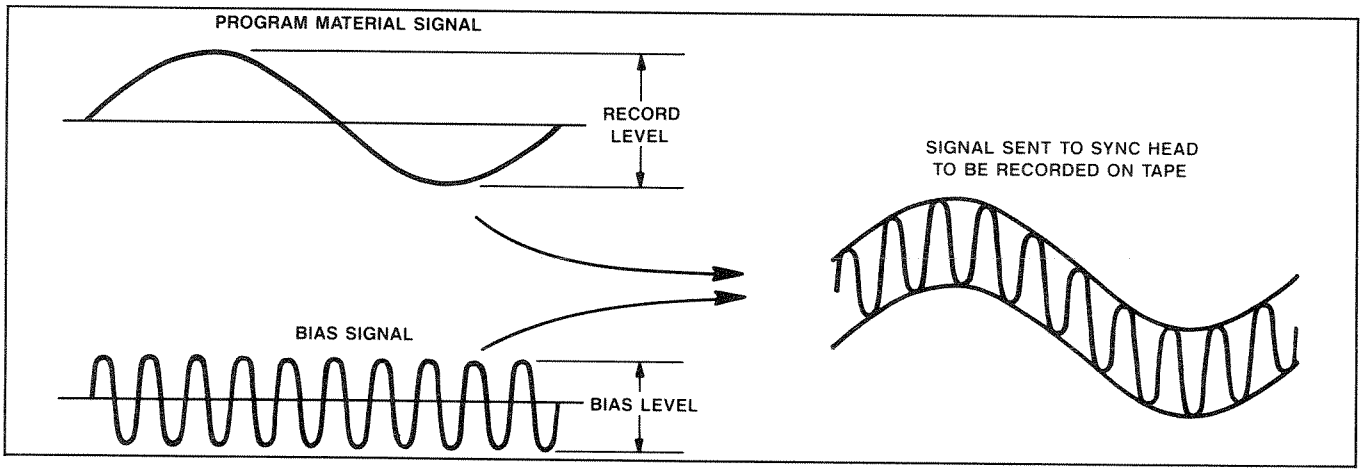

Figure 6-31. Record Level/Bias Level

STEP 2 Press IND until the Status Display reads "1".

STEP 3 Select HI SPEED and INPUT LEVEL.

STEP 4 Adjust the function generator or audio oscillator to 10kHz sine wave. Adjust the amplitude until Channel 1 panel meter reads 0 VU.

STEP 5 Select RECORD READY for track 1 and 2 on the Meter Housing or press ALL and one of the buttons in the Record section on the ALN.

STEP 6 Press the PLAY and RECORD buttons. The machine will enter RECORD mode. The BIAS and ERASE LEDs will be illuminated for Channels 1 and 2.

STEP 7 Select the BIAS LEVEL adjustment.

STEP 8 Press INC or DEC until peak Bias is achieved. Signal will be at the maximum level at peak bias.

STEP 9 Continue to increment until the desired overbias is achieved. Typical values for 3M Scotch 226 are: 2dB at 7.5 ips, 2dB at 15 ips, or 1.5dB at 30 ips.

STEP 10 Press IND until the Status Display reads "2".

STEP 11 Repeat STEPs 7-9.

STEP 12 Press IND until the Status Display reads "1".

STEP 13 Adjust the function generator or audio oscillator to 1kHz.

STEP 14 Select RECORD LEVEL and INC or DEC for 0 VU on the panel meter.

STEP 15 Select LEVEL in the INPUT section of the ALN and INC or DEC for 0 VU on the panel meter.

STEP 16 Switch between RECORD LEVEL and INPUT LEVEL until both are 0 VU.

STEP 17 Press IND until the Status Display reads "2".

STEP 18 Repeat STEPs 14-16.

6.7.2 Record High Frequency

The Record high frequency alignment is made to set the record circuitry high frequency equalizer. It is made in RECORD mode using the tape type for which the alignment is being made. It is very important that the proper tape is used because the adjustment of the record circuitry relies heavily on the tape being used. It is also important to make sure that the secondary record compensations are properly set, the reproduce and sync playback circuitry has been calibrated, and the RECORD LEVEL and BIAS LEVEL alignments have been made prior to making this alignment.

STEP 1 Adjust the function generator or audio oscillator to 10kHz.

STEP 2 Press IND until the Status Display reads "1".

STEP 3 Select RECORD H.FREQ (in the RECORD section of the ALN).

STEP 4 Press INC or DEC until 0 VU reading is achieved on the panel meter.

STEP 5 Press IND until the Status Display reads "2".

STEP 6 Repeat STEPs 3 and 4.

6.7.3 Repro Low Frequency Alignment

Due to the fringing effect that occurs on test tapes when playing back low frequency tones and the signal in the guard band is read by the head when playing a full track recorded tape, the reproduce circuitry low frequency equalizer is set to a signal which is recorded by the Sync head.

STEP 1 Adjust the function generator or audio oscillator to approximately 100Hz.

NOTE: Sweep frequencies above and below 100Hz (from 30Hz to 500Hz) to find low frequency peak. The low frequency peak is the frequency at which the signal output is at its maximum point. This can be measured at the channel output with an AC voltmeter or also using the VU meter.

STEP 2 Press IND until the Status Display reads "1".

STEP 3 Select REPRO L.FREQ (in the REPRODUCE section of the ALN).

STEP 4 Press INC or DEC for a +0.5 VU reading on the panel meter.

STEP 5 Press IND until the Status Display reads "2".

STEP 6 Repeat STEPs 3 and 4.

6.7.4 Sync Low Frequency Alignment

The sync playback circuitry low frequency equalizer is set referenced to the low frequency peak signals which have been recorded by the sync head. This is due to the fringing effect that occurs on test tapes when playing back low frequency tones and the signal in guard band which is read by the head when playing a full track recorded tape. The low frequency peak is the low frequency at which the the playback output level is at a maximum.

STEP 1 Press HI SPEED .

STEP 2 Set the frequency generator or audio oscillator to approximately 100Hz.

NOTE: Sweep above and below 100Hz to find the low frequency peak. This will be the frequency at which the signal output is at the maximum level.

STEP 3 Record 2 minutes of the low frequency peak.

STEP 4 Rewind and place machine into PLAY mode.

STEP 5 Press IND until the Status Display reads "1".

STEP 6 Select SYNC L.FREQ. (in the SYNC section of the ALN).

STEP 7 Press INC or DEC until the panel meter reads +0.5VU.

STEP 8 Press IND until the Status Display reads "2".

STEP 9 Repeat STEPs 5 and 6.

STEP 10 Store in the desired Preset memory location number (same as in Section 6.6.5 STEP 10).

STEP 11 Press MID SPEED and repeat STEPs 2-10.

STEP 12 Press LOW SPEED and repeat STEPs 2-10 except signal level −10dB below 0 VU.

6.7.5 Record/Repro Frequency Response

This is a confidence check to assure the proper adjustments have been performed. It is very much like the frequency response test made when aligning the playback circuitry. This test will give the true indication of the frequency response characteristic of this machine. It is referenced to the machine itself and limited only by the tape used and the integrity of the adjustments performed.

If at anytime there is a question as to whether it is necessary to re-align the audio electronics, PERFORM THIS TEST!

STEP 1 Adjust the function generator or audio oscillator to 1kHz.

STEP 2 Press ALL and select RECORD LEVEL . Verify that both of the panel meters read 0 VU. If they do not, readjust according to Section 6.7.2.

STEP 3 Adjust the function generator or audio oscillator to 10kHz and verify 0 VU on the panel meter.

STEP 4 Press INC or DEC as required so that the panel meter reading is 0 VU.

STEP 5 Re-adjust oscillator to 1kHz and ensure 0 VU for both tracks.

STEP 6 Select INPUT LEVEL ensure 0 VU for both tracks.

STEP 7 Press INC or DEC as required to set the panel meter reading to 0 VU.

STEP 8 Re-adjust oscillator to 500Hz and sweep frequency slowly to 25kHz and ensure proper frequency response.

STEP 9 If the signal level does not fall by more than 2dB (1.5dB Low Speed) or increase by more than +0.75dB above 0 VU throughout the range of frequencies between 500Hz and 25kHz, the frequency response is good.

STEP 10 Store alignment into the desired Preset memory location number before changing speeds. This is done by pressing and holding down the CONTROL button then pressing STORE . Now the STORE function is armed. Store the information by pressing PRESET 1 , PRESET 2 , or PRESET 3 .

STEP 11 Repeat STEPs 7-10 for mid speed.

STEP 12 Repeat STEPs 7-10 for low speed with the exception that INPUT and RECORD LEVEL are −10dB below 0 VU. When using 10kHz for calibration, the level is −12dB below 0 VU.

STEP 13 Verify both tracks are in phase for all speeds throughout frequency range.

6.8 SECONDARY RECORD COMPENSATIONS

The Record Compensation Feedback (RCB) and the Record Compensation Feedforward (RCF) provide a means to compensate for alternative tape formulations. The standard factory settings should be adequate for most modern high-coersivity tapes. For optimum results, consult Table 6-4 and set the RCB and RCF accordingly when using one of the tapes listed. Tapes of even less contemporary formulations and possibly those of future formulations may require some adjustment to these parameters.

The settings for RCF and RCB will be dependent of the type of tape used.

TAPE TYPE		30 IPS	15 IPS	7.5 IPS
3M Scotch 226	RCF	C0	CB	C4
	RCB	C1	C7	C4
3M Scotch 250	RCF	C0	CB	C4
	RCB	C2	C7	C4
Afga 469	RCF	C0	CB	C4
	RCB	C1	C7	C4
Ampex 456	RCF	C0	CB	C4
	RCB	C1	C7	C4
BASF LGR50	RCF	C0	CB	C4
	RCB	C1	C7	C1
AFGA PER528	RCF	C0	CB	C6
	RCB	C2	C7	C2
BASF LGR30	RCF	C0	CB	C6
	RCB	C2	C7	C2
3M Scotch 176	RCF	C0	C8	C4
	RCB	C2	C7	C4

Table 6-4. Tape Type Settings

The settings for RGC and SGC are dependent on the headstack used.

6.8.1 RCB

The RCB provides a control range from C0(hex) to C7(hex). It provides a shelving 2kHz to 8kHz boost with decreasing control codes. Refer to the RCB graph in Figure 6-32.

The following settings are made for ¼-inch high-speed NAB and DIN heads.

Repro Gap Compensation (RGC)	30 ips	C1
	15 ips	CA
	7.5 ips	CA
Sync Gap Compensation (SGC)	30 ips	C1
	15 ips	CC
	7.5 ips	CE

Table 6-5. RGC and SGC Settings For High-Speed 1/4'' NAB and DIN Heads

6.8.2 RCF

The RCF provides a control range from C0(hex) to CF(hex). It provides a shelving 8kHz to 25kHz high frequency boost with increasing control codes. Refer to the RCF graph in Figure 6-32.

NOTE: At the time of this printing, C8(hex) through CF(hex) are functionally identical to C0(hex) through C7(hex).

6.8.3 Adjusting the Secondary Record Compensations

These adjustments should be left to experienced service personnel with appropriate test equipment. Adjustment of these parameters should only be considered if the tape formulation being used shows significantly undesirable response flatness problems that cannot be remedied by normal record equalization and overbias adjustments.

These alignments can only be facilitated on Channels 1 and 2 when the ALL Track Selector button is illuminated. They can be stored as in any other alignment procedure.

6.8.4 Gap Compensation

Gap Compensation for Repro (RGC) and Sync (SGC) provide a means to compensate for alternate gap-width heads. Refer to Table 6-5 for standard settings. In addition, these provide for a degree of low freuency

response extension for heads of moderate width profile, when playing back long wave length signals. In other words, 30 ips playback of very low frequency material.

These control codes provide a shelving high frequency boost from 10 to 25kHz in REPRO with inc

These control codes provide a shelving high frequency boost from 10 to 25kHz in REPRO with increasing control codes from C8(HEX) through CF(HEX).

Control Codes C0(HEX) through C7(HEX) are identical to the above except they provide an additional low frequency REPRO boost.

Adjusting gap compensation setting would be required if heads of significantly different gap-width are used. Data on alternate head designs (low speed, wide profile, etc.) will be made available as they are released. Should extensive relapping of tape heads cause a change in high frequency performance, gap compensation may be adjusted to compensate.

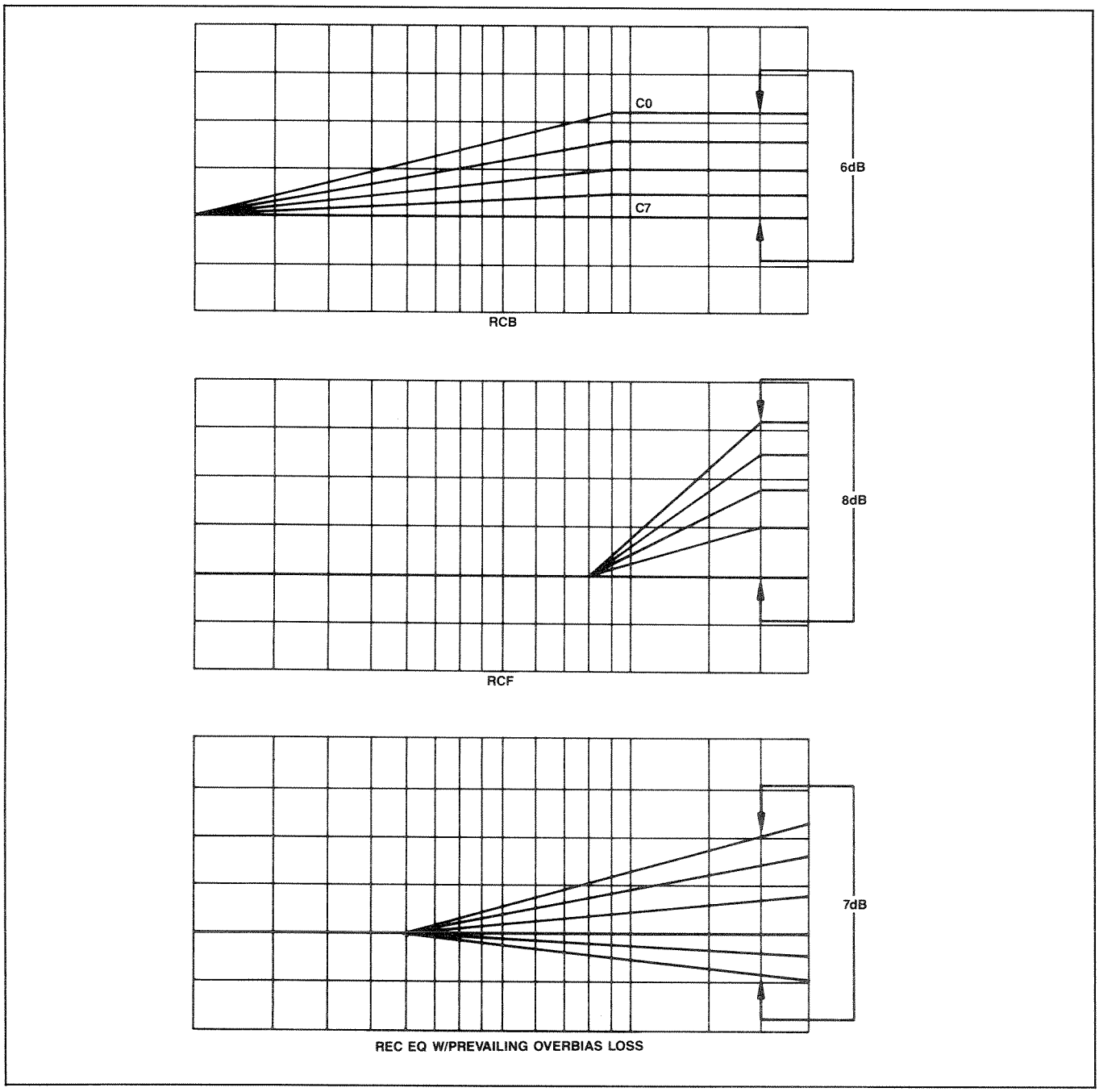

Figure 6-32. Secondary Record Compensations

SECTION 7
BLOCK DIAGRAMS

SYSTEM BLOCK DIAGRAM

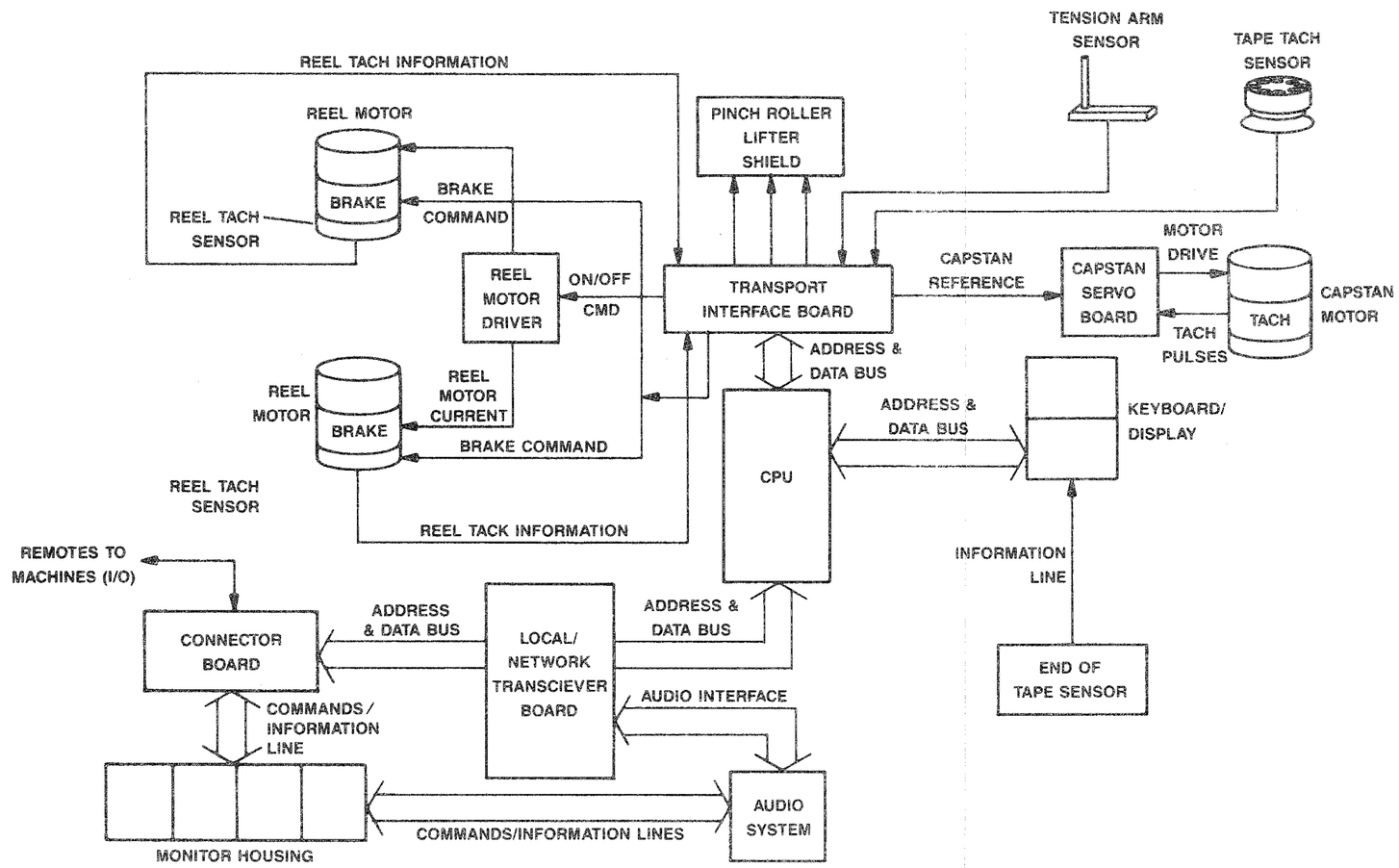

LOGIC FLOW DIAGRAM

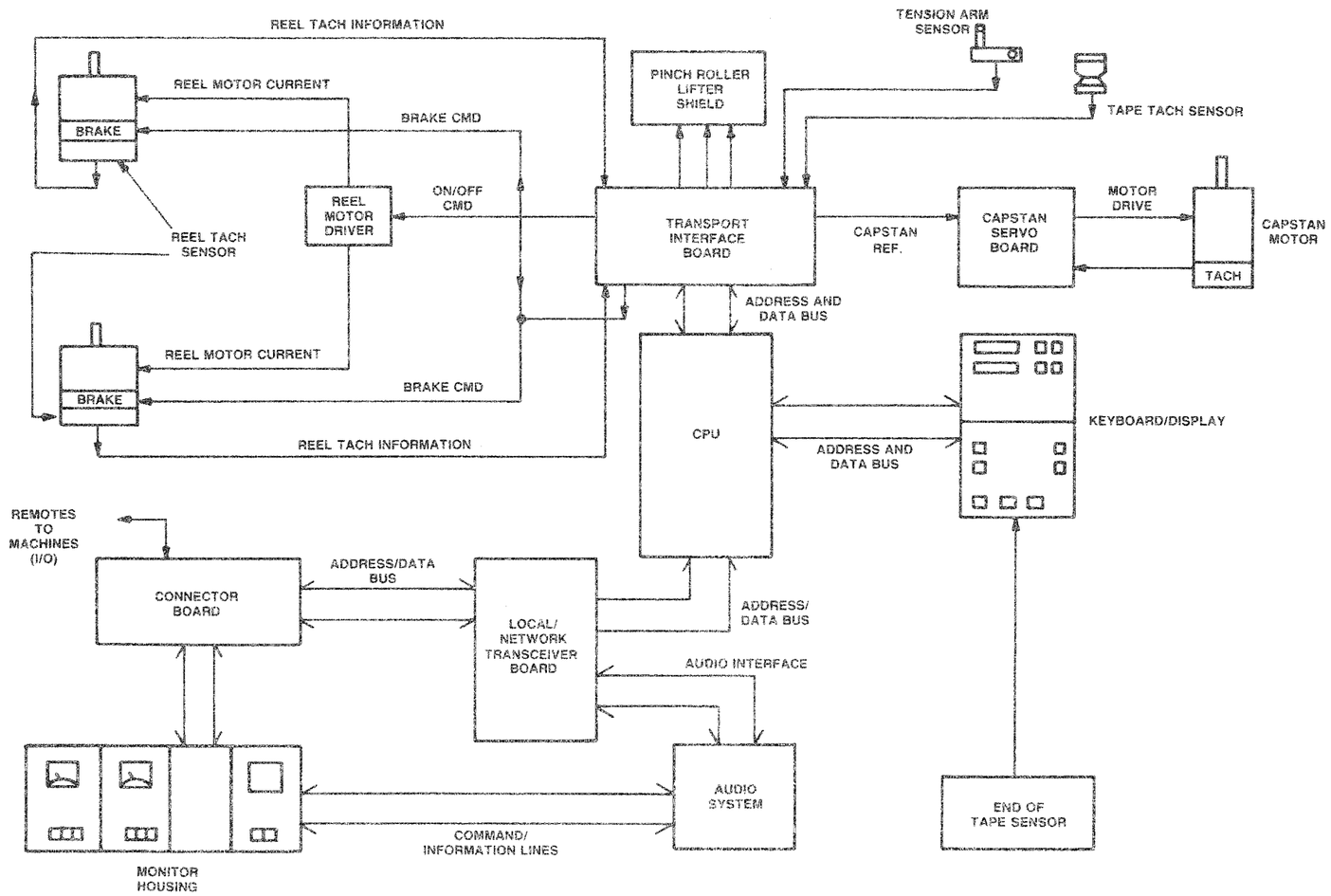

TAPE TRANSPORT BLOCK DIAGRAM

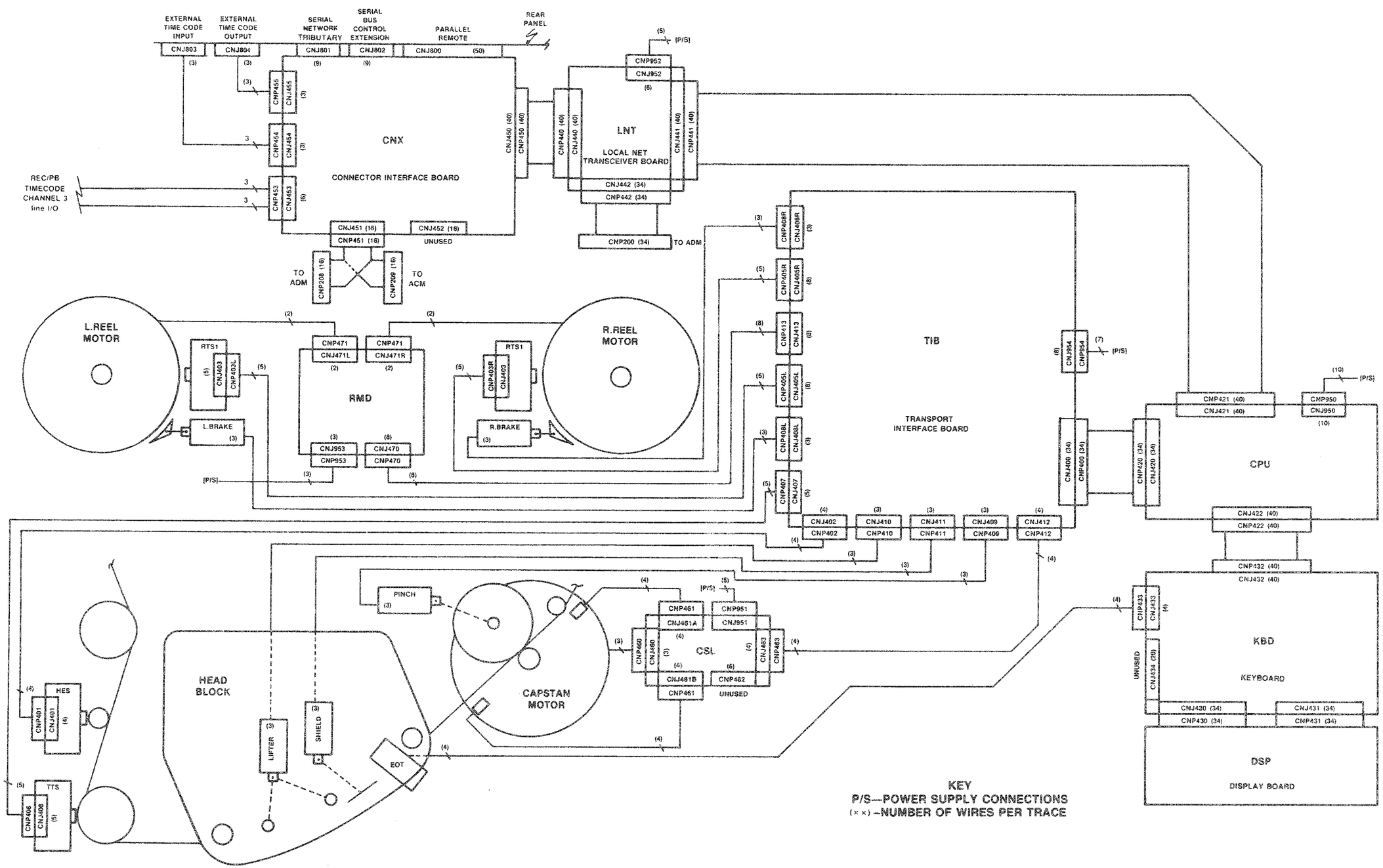

AUDIO SYSTEM BLOCK DIAGRAM

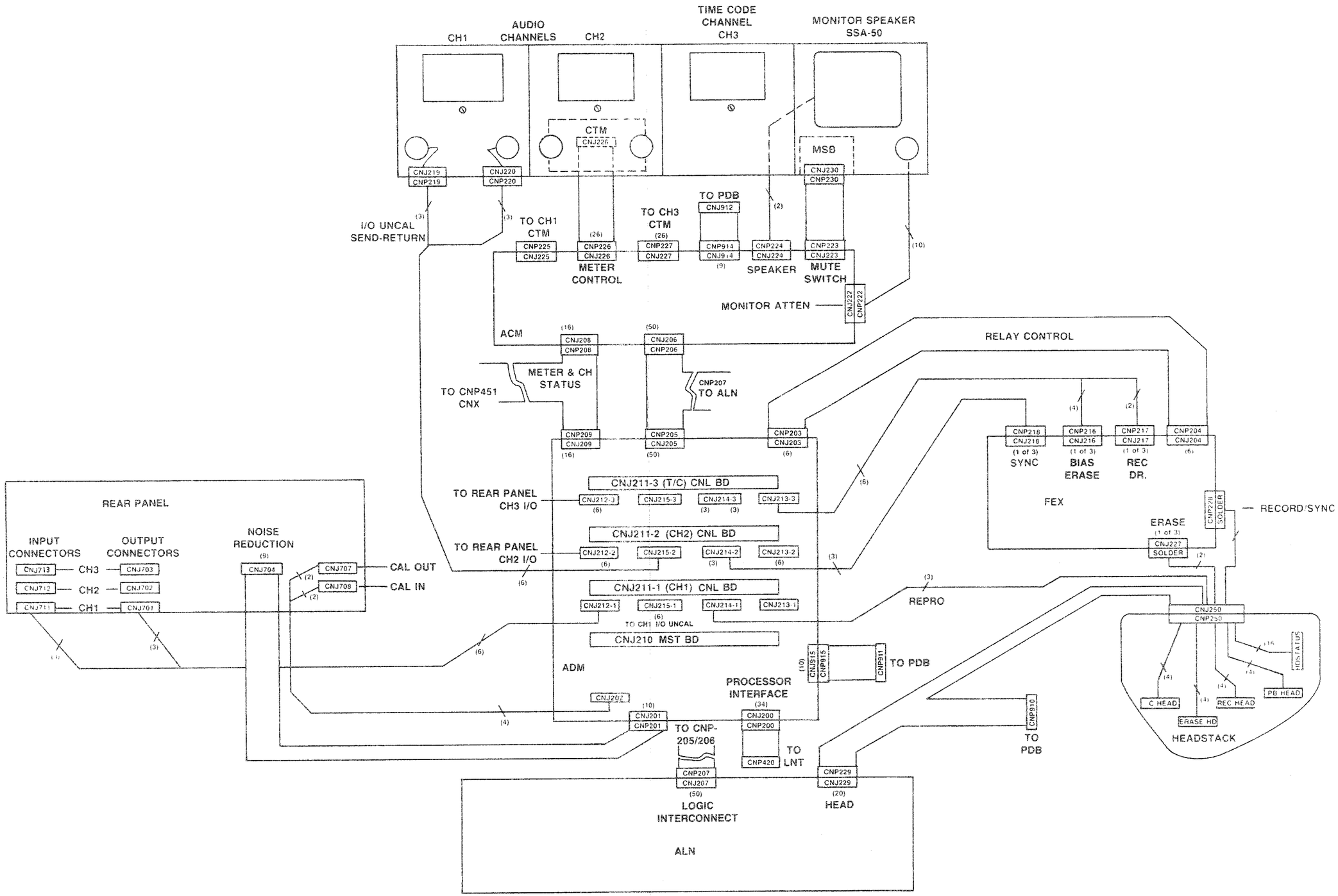

SECTION 8
SEMICONDUCTOR DEVICES

8-1. HCMOS DEVICES

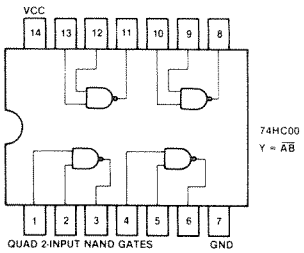

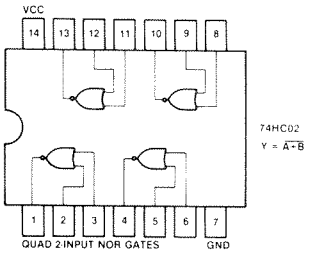

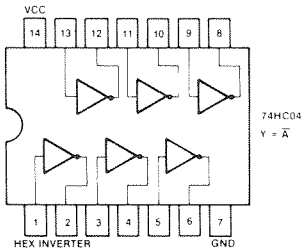

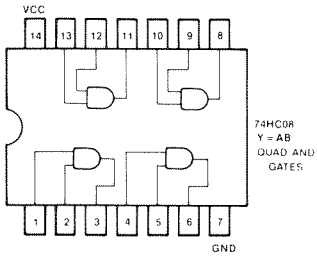

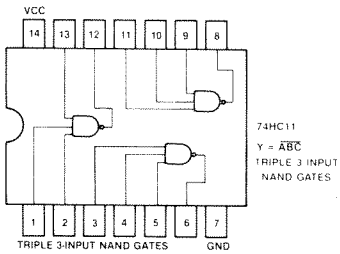

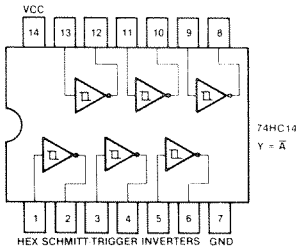

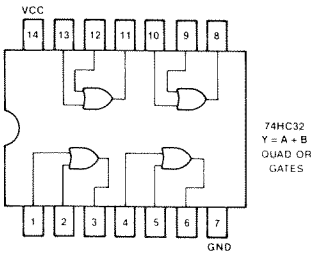

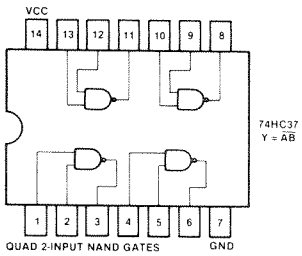

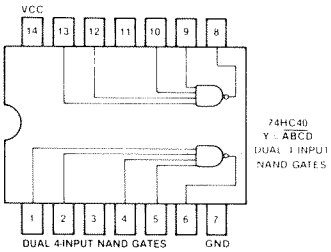

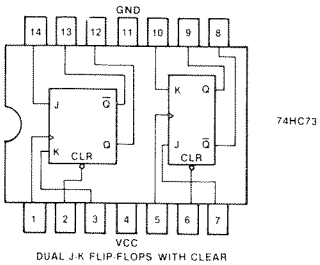

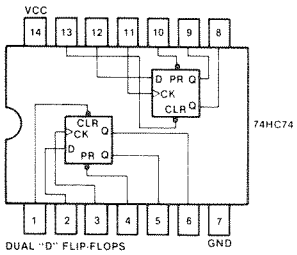

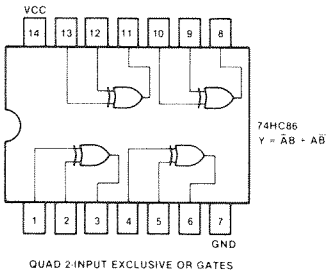

74HC73
TRUTH TABLE

CLR	J	K	Q	$\overline{Q}$
0	X	X	0	1
1	0	0	Q	$\overline{Q}$
1	0	1	0	1
1	1	0	1	0
1	1	1	$\overline{Q}$	Q

74HC74
FUNCTION TABLE

INPUTS				OUTPUTS	
PRESET	CLEAR	CLOCK	D	Q	$\overline{Q}$
L	H	X	X	H	L
H	L	X	X	L	H
L	L	X	X	H	H
H	H	↑	H	H	L
H	H	↑	L	L	H
H	H	L	X	Q_0	$\overline{Q_0}$

74HC86
FUNCTION TABLE

INPUTS		OUTPUTS
A	B	Y
L	L	L
L	H	H
H	L	H
H	H	L

H=HIGH LEVEL
L=LOW LEVEL

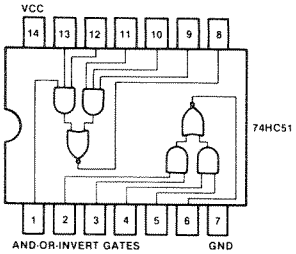

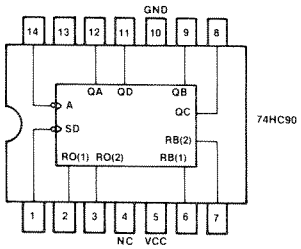

DECADE COUNTER DIVIDE BY 2, DIVIDE BY 5

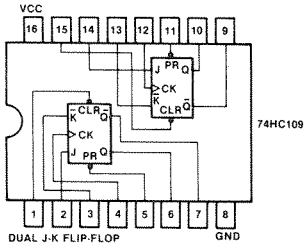

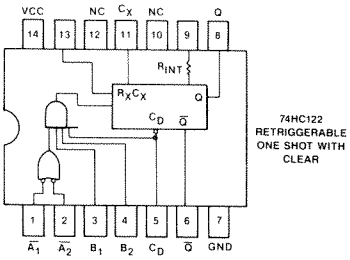

74HC122
TRIGGERING TRUTH TABLE

INPUTS			RESPONSE
C_D	A	B	
L	X	X	NO TRIGGER
X	L	X	NO TRIGGER
X	X	X	NO TRIGGER
H	H	H	TRIGGER
X	X	L	NO TRIGGER
X	H	X	NO TRIGGER
H	X	H	TRIGGER
Z	X	H	TRIGGER

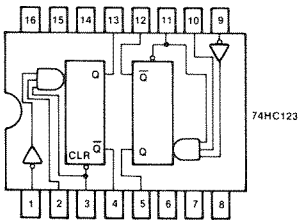

DUAL RETRIGGERABLE MONOSTABLE
MULTIVIBRATORS WITH CLEAR

74HC123
FUNCTION TABLE

CLEAR	A	B	Q	$\overline{Q}$
L	X	X	L	H
X	H	X	L	H
X	X	L	L	H
H	L	↑	⎍	⎏
H	↓	H	⎍	⎏
↑	L	H	⎍	⎏

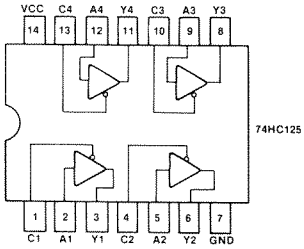

TRI-STATE QUAD BUFFERS

74HC125
TRUTH TABLE

INPUTS		OUTPUT
A	C	Y
H	L	H
L	L	L
X	H	HI-Z

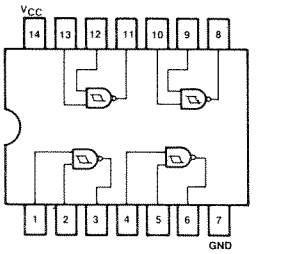

74HC132 Y = AB QUAD 2 INPUT NAND
SCHMITT TRIGGERS

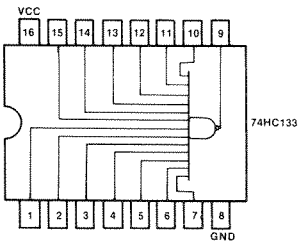

13 INPUT NAND GATE

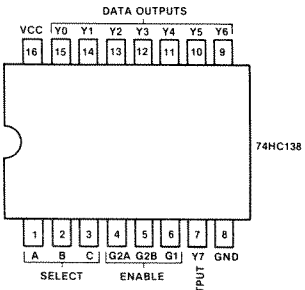

3 TO 8 LINE
DECODER/MULTIPLEXER

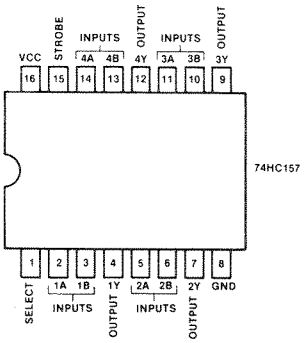

QUAD 2-LINE TO 1-LINE DATA SELECTOR/MULTIPLEXERS

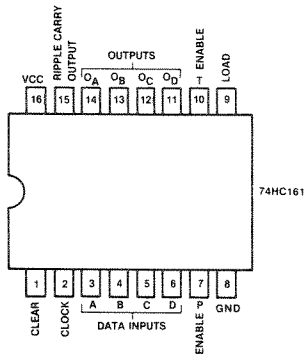

SYNCHRONOUS 4-BIT COUNTER, BINARY WITH
SYNCHRONOUS CLEAR

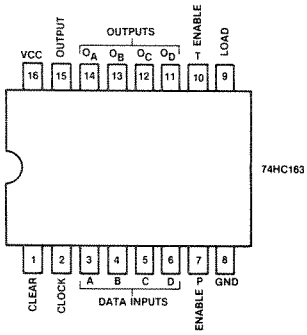

SYNCHRONOUS 4-BIT COUNTER, BINARY

HEX D-TYPE FLIP-FLOPS 74HC174

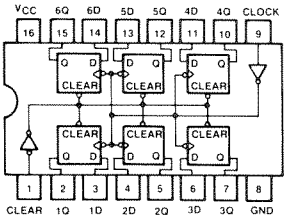

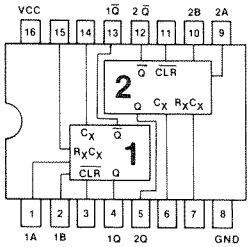

DUAL MONOSTABLE MULTIVIBRATORS

74HC273
HEX D FLIP-FLOPS

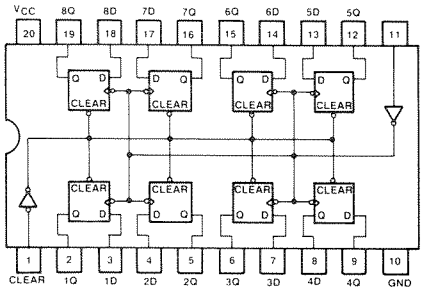

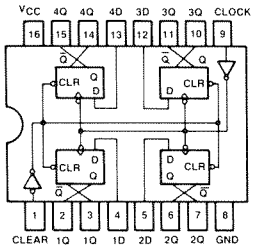

74HC175
QUAD D-TYPE FLIP-FLOPS

FUNCTION TABLE
(EACH FLIP-FLOP)

INPUTS			OUTPUTS	
$\overline{G}$	CLOCK	DATA	Q	$\overline{Q}$
H	X	X	Q_0	$\overline{Q}_0$
L	↑	H	H	L
L	↑	L	L	H
X	L	X	Q_0	$\overline{Q}_0$

74HC175

74HC240

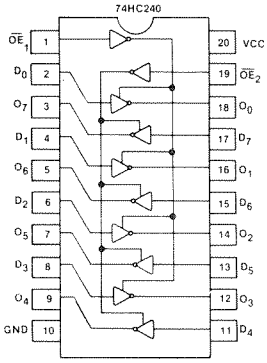

OCTAL BUFFER/LINE DRIVER

74HC240 FUNCTION TABLE

INPUTS		OUTPUTS
OE	D	O
L	L	H
L	H	L
H	X	Hi-Z

74HC244

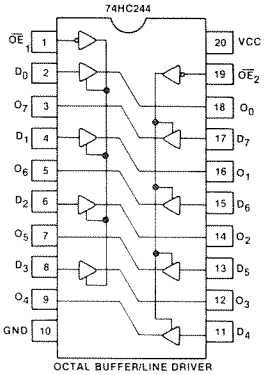

OCTAL BUFFER/LINE DRIVER

74HC244 FUNCTION TABLE

INPUTS		OUTPUT
$\overline{OE}$	D	O
L	L	L
L	H	H
H	X	Hi-Z

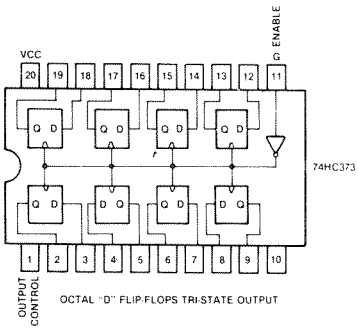

74HC373

OCTAL "D" FLIP-FLOPS TRI-STATE OUTPUT

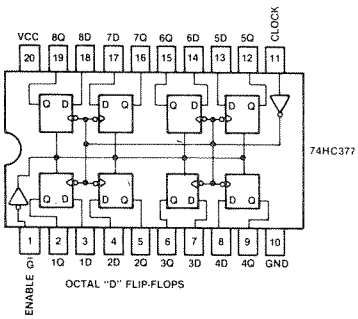

74HC377

OCTAL "D" FLIP-FLOPS

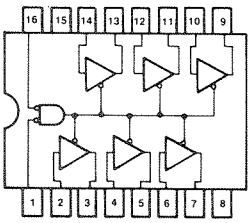

74HC365

HEX BUFFER WITH ENABLES

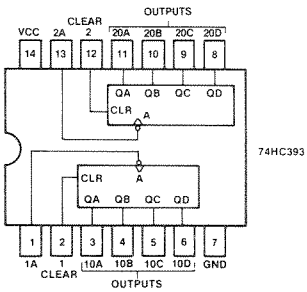

74HC393

DUAL 4-BIT BINARY COUNTER

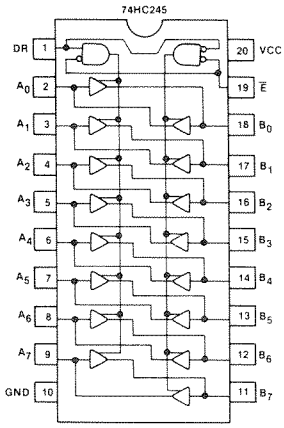

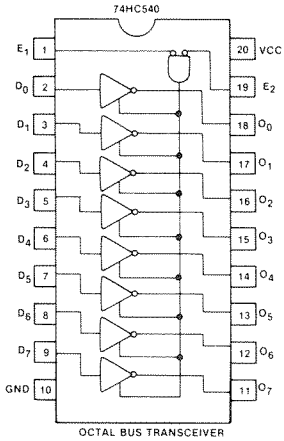

74HC245 TRUTH TABLE

INPUTS		OUTPUT
E	DR	
L	L	Bus B Data to Bus A
L	H	Bus A Data to Bus B
H	X	Isolation

74HC540 FUNCTION TABLE

INPUTS			OUTPUT
E1	E2	D	O
L	L	H	L
H	X	X	Hi-Z
X	H	X	Hi-Z
L	L	L	H

8-2. LS DEVICES

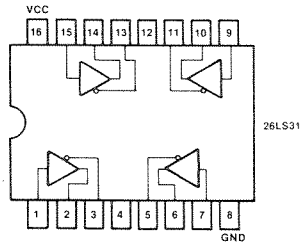

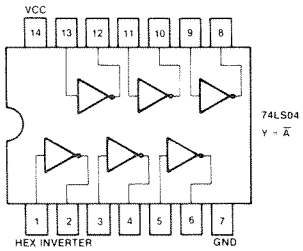

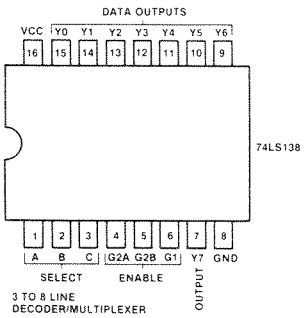

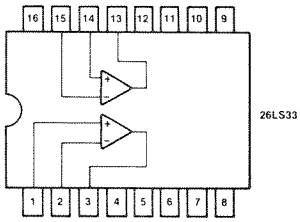

8-3. LSI ICS

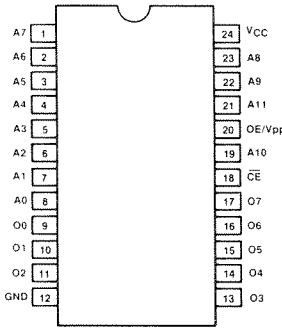

2732-32K EPROM(4K × 8)

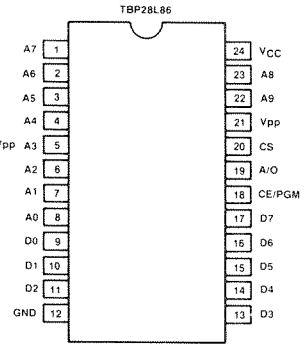

EPROM

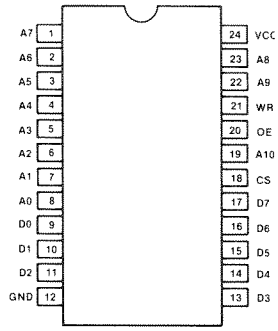

UPD-446
6116
8K RAM

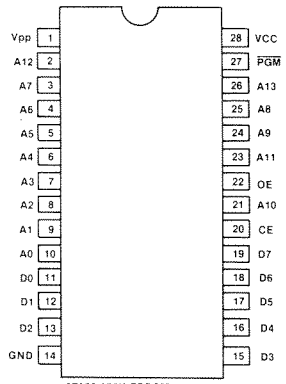

27256-256K EPROM(32K × 8)
27128 — 128K EPROM (16KX8)
2764 — 64K EPROM (8KX8)

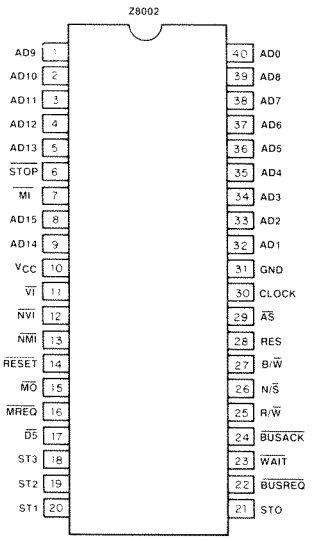

MICROCOMPUTER

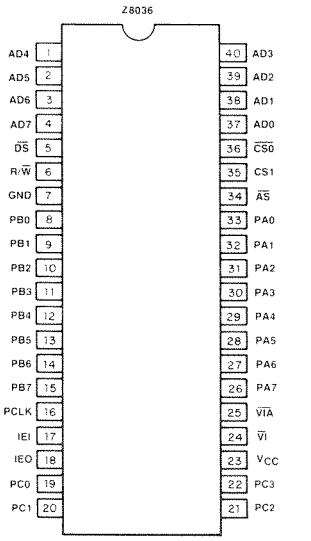

COUNTER/TIMER/I/O

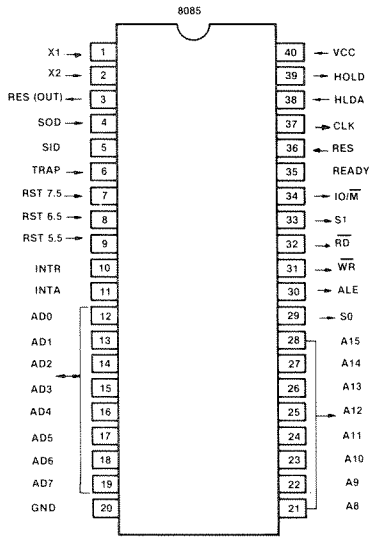

CENTRAL PROCESSING UNIT

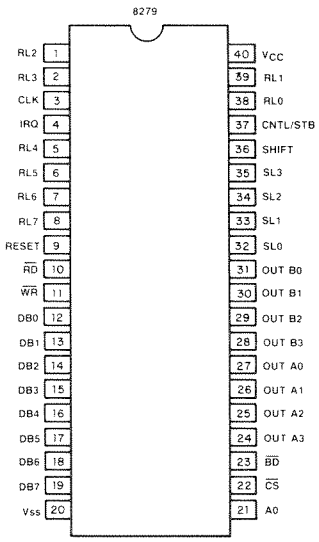

PROGRAMMABLE KEYBOARD/DISPLAY INTERFACE

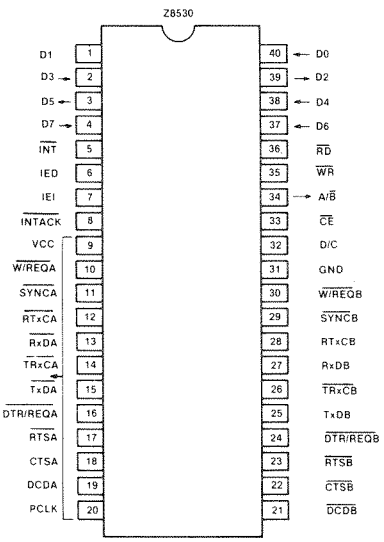

SCC SERIAL COMMUNICATIONS CONTROLLER

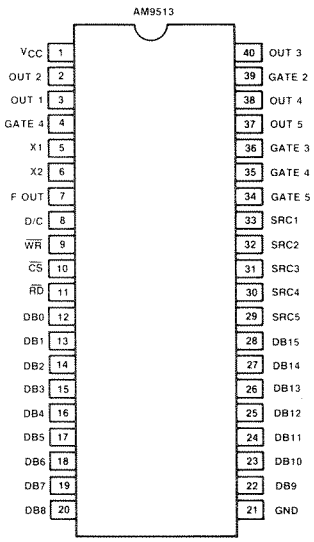

SYSTEM TIMING CONTROLLER

SONY

ANALOG TAPE RECORDER

APR-5001
APR-5002
APR-5003V
Series

OPERATION AND MAINTENANCE MANUAL

1st Edition (Revised 1)

APR-5001 Serial No.10001 and Higher

APR-5002 Serial No.20001 and Higher

APR-5003V Serial No.10001 and Higher

APR-5001/5002/5003V
3-711-352-02

Sony Corporation
© 1989

Printed in Japan
1989. 4 11

SECTION 7
BLOCK DIAGRAMS

SYSTEM BLOCK DIAGRAM

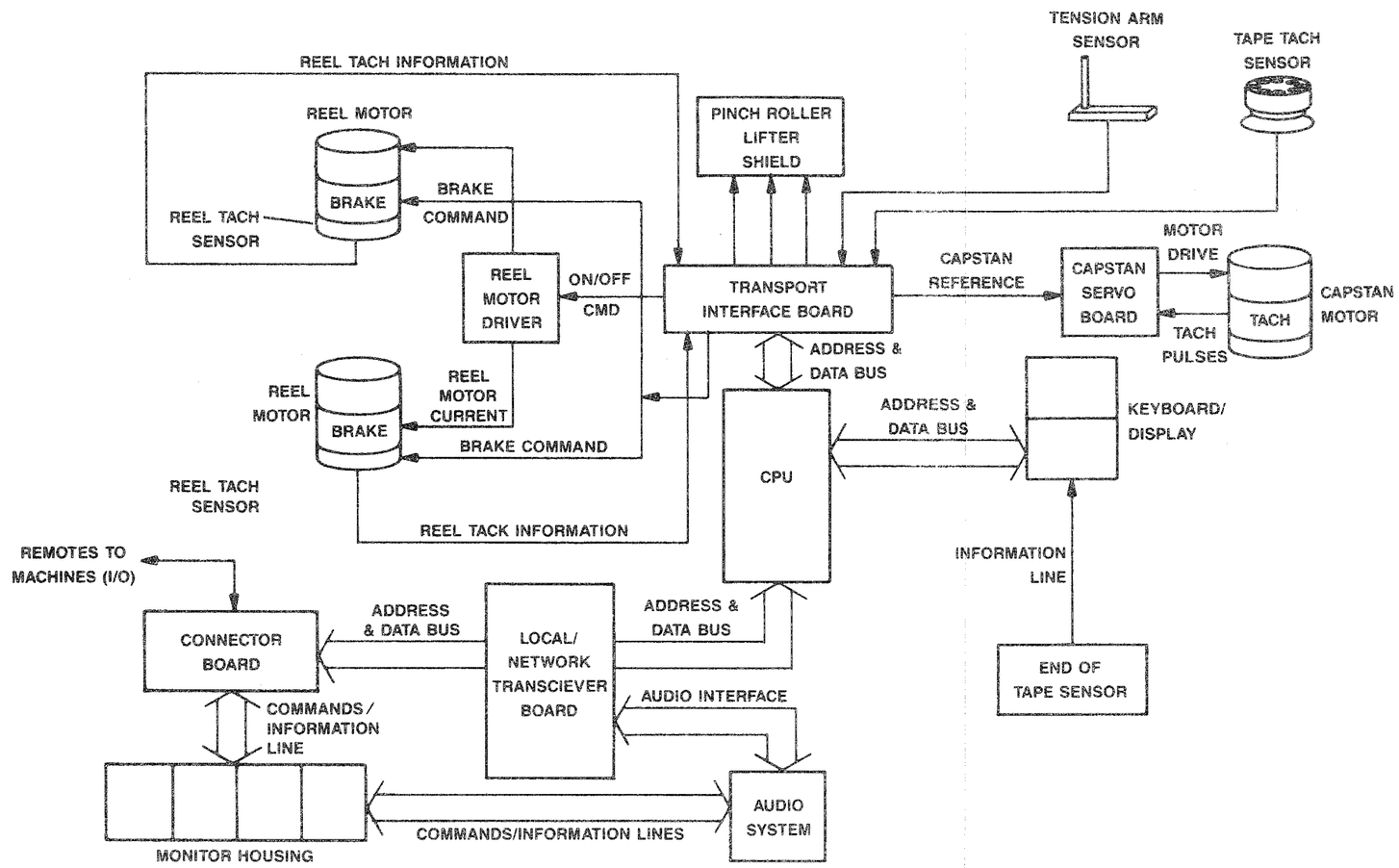

LOGIC FLOW DIAGRAM

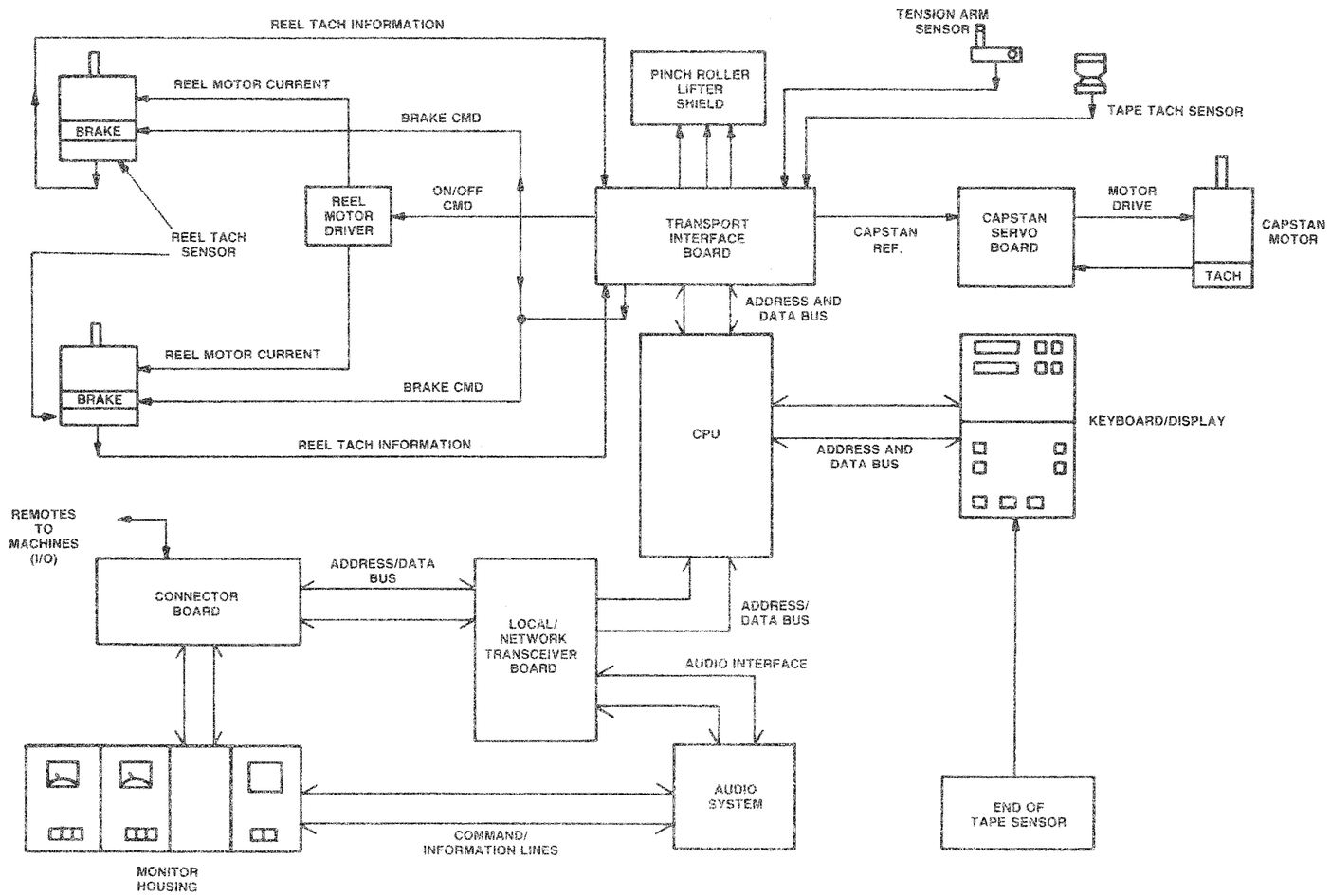

TAPE TRANSPORT BLOCK DIAGRAM

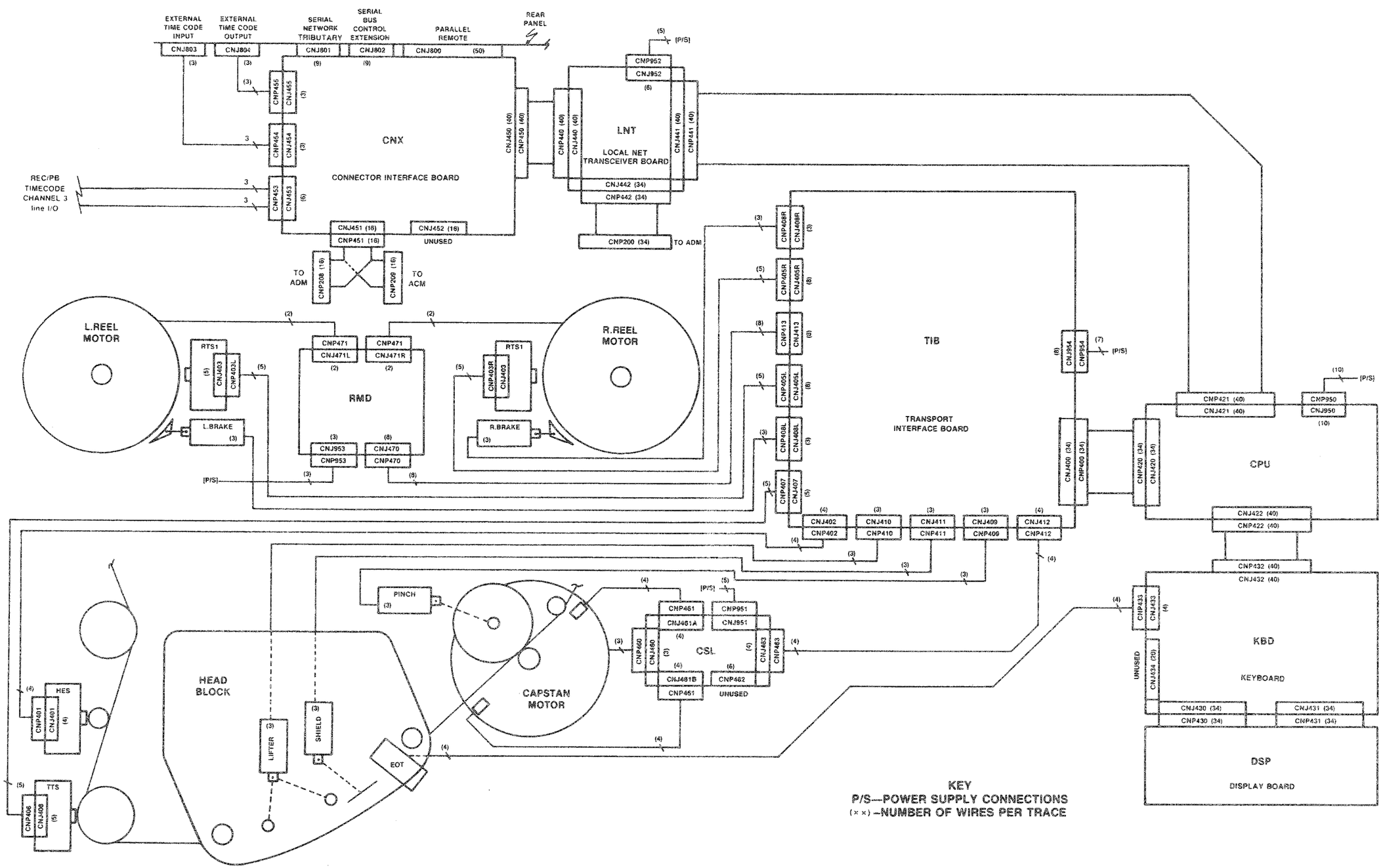

AUDIO SYSTEM BLOCK DIAGRAM

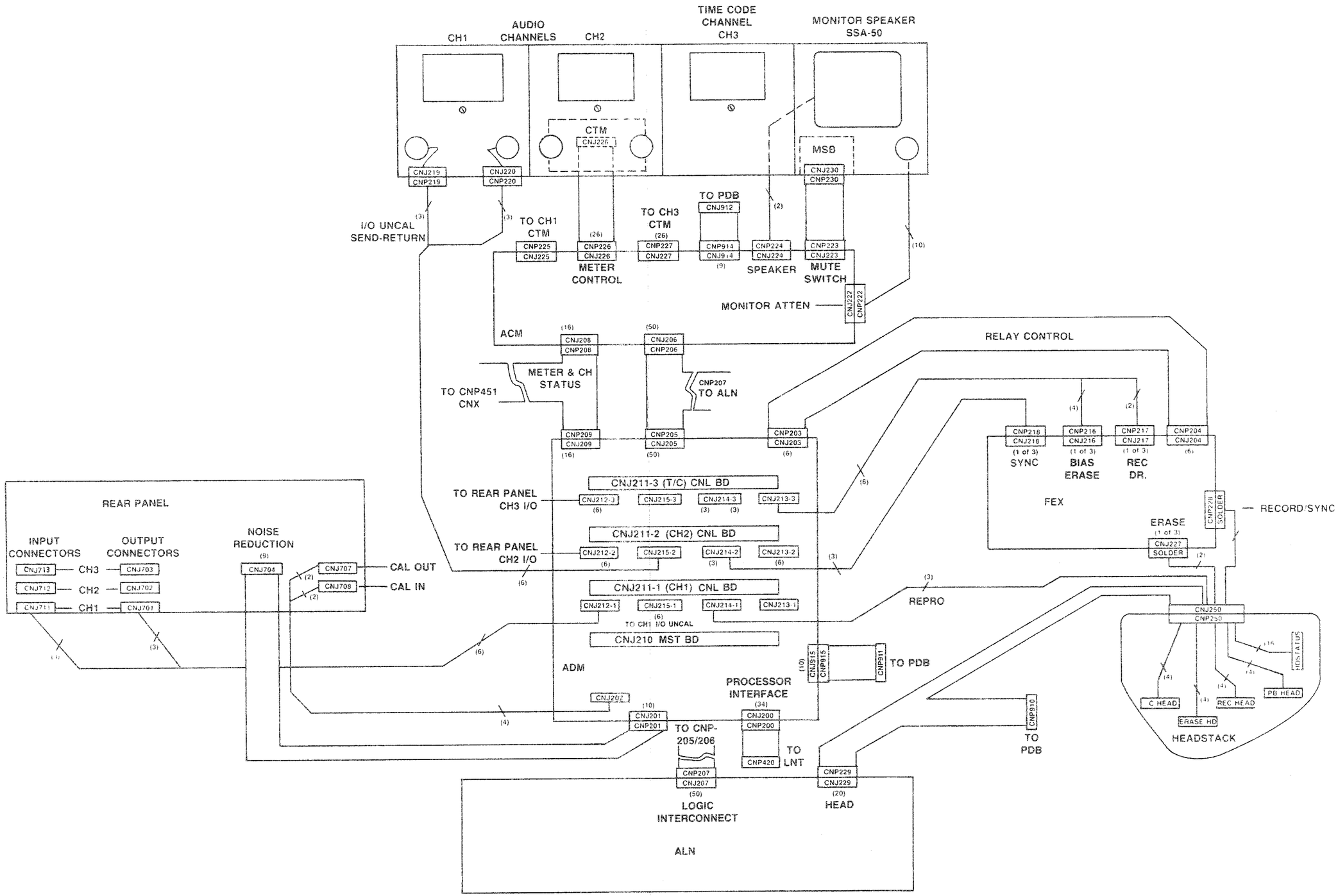

SECTION 9
SCHEMATIC AND CIRCUIT BOARD DIAGRAMS

9-1 SCHEMATIC AND CIRCUIT BOARD DIAGRAMS

How to read the Schematic and Circuit Board Diagrams

- Basically, the APR-5001/5002/5003V series schematic and circuit board diagrams are laid out facing each other on opposite pages.

- There are schematic and circuit board diagrams for two blocks in this order: Main Unit and Power Supply. Furthermore, each block is arranged in alphabetical order.

- Basically, the circuit board diagram symbols are the symbols viewed from the component side.
  The circuit board diagrams that use both-side tracing are distiguished by the density of the black cross-hatching.
  The solder side tracing is 40% and the component side tracing is 20%.

- The different schematic and circuit board diagrams for one board are identified by the suffix of the circuit board number, and are laid out in suffix order as necessary. Therefore, when it is necessary to verify the contents of a board, identify the board not by the serial number of the APR-5001/5002/5003V series unit but rather by the suffix of the board number for the board used.

ACM

For ACM board, see pages 9-3 to 9-6.

ACM BOARD (1-619-166-12)
Component Side

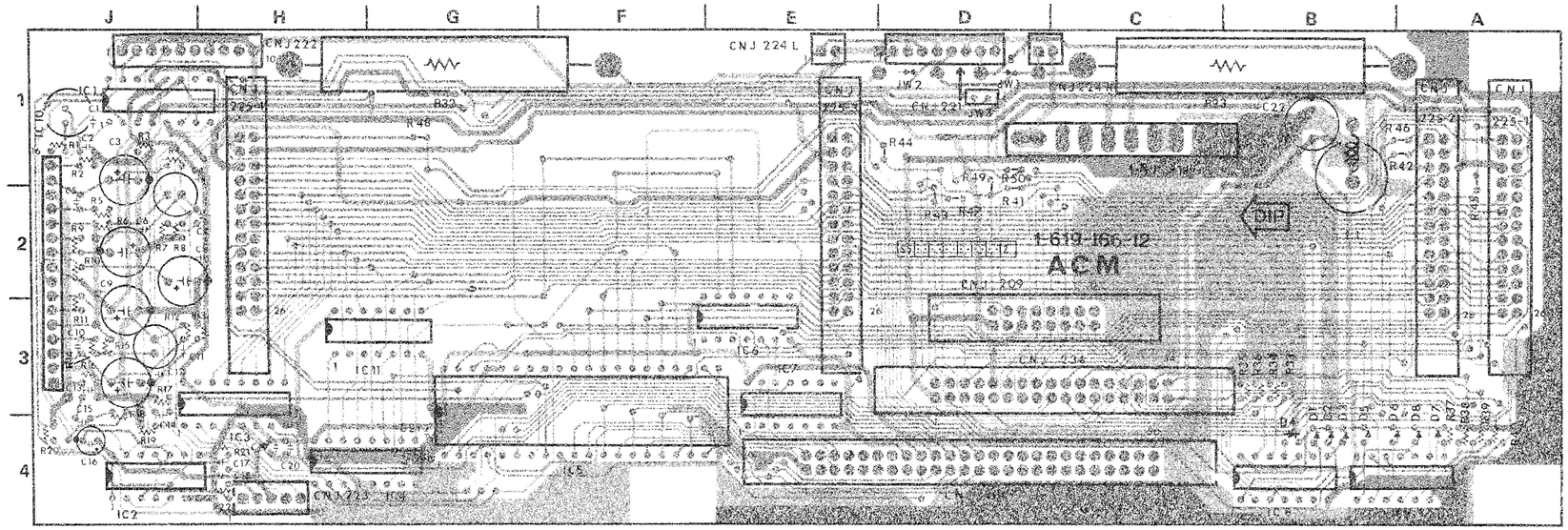

■ SOLDER SIDE PATTERN 1-619-166-12
■ COMPONENT SIDE PATTERN 1-619-166-12

ACM BOARD

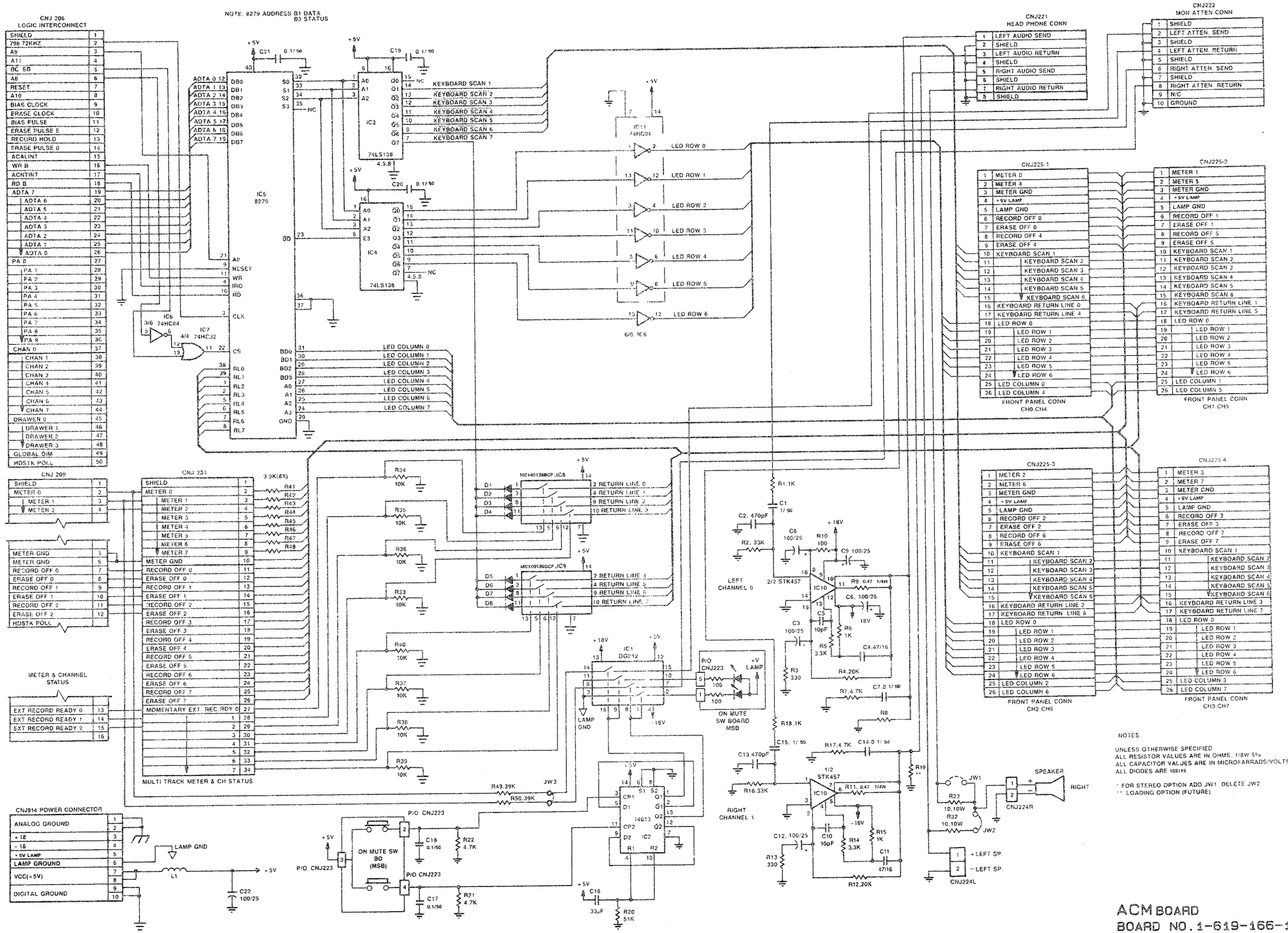

NOTES

UNLESS OTHERWISE SPECIFIED
ALL RESISTOR VALUES ARE IN OHMS, 1/8W,5%
ALL CAPACITOR VALUES ARE IN MICROFARADS/VOLTS
ALL DIODES ARE 1SS119

* FOR STEREO OPTION ADD JW1. DELETE JW2
** LOADING OPTION (FUTURE)

ACM BOARD
BOARD NO.1-619-166-11 & HIGHER
APR-5002/5003V

AHB BOARD (1-619-380-12)
Solder Side

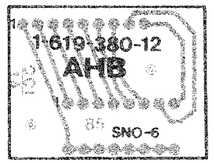

■ SOLDER SIDE PATTERN

AHB BOARD

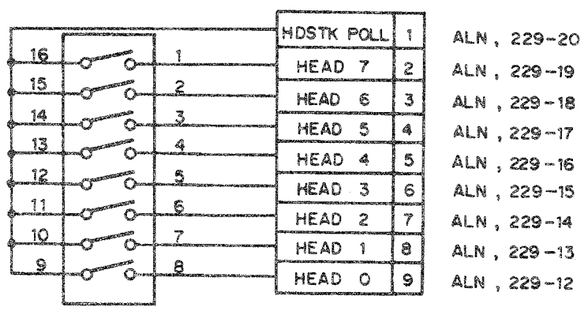

AHB BOARD
BOARD NO.1-619-380-11 & HIGHER
APR-5002/5003V

ADM BOARD (1-619-167-11)
Component Side

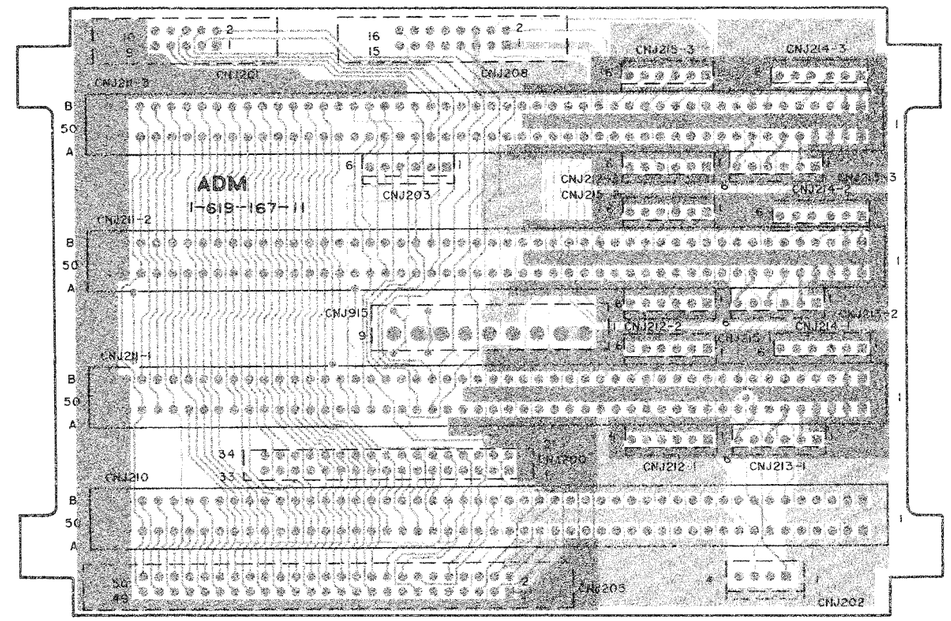

■ SOLDER SIDE PATTERN 1-619-167-11
■ COMPONENT SIDE PATTERN 1-619-167-11

ADM BOARD

CNJ214-1,2,3
REPRO AND CUE HEAD
CONNECTOR

1	+ REPRO N (**)
2	- REPRO N (**)
3	REPRO SHIELD N (**)
4	+ CUE N (**)
5	- CUE N (**)
6	CUE SHIELD N (**)

CNJ215-1,2,3
INPUT/OUTPUT UNCAL S/R
CONNECTOR

1	INPUT UNCAL SEND N (**)
2	INPUT UNCAL RETURN N (**)
3	INPUT UNCAL SHIELD N (**)
4	OUTPUT UNCAL SEND N (**)
5	OUTPUT UNCAL RETURN N (**)
6	OUTPUT UNCAL SHIELD N (**)

CNJ208
METER CHANNEL STATUS
CONNECTOR

2	METER 0	SHIELD	1
4	METER 2	METER 1	3
6	METER GND	METER GND	5
8	ERASE OFF 0	RECORD OFF 0	7
10	ERASE OFF 1	RECORD OFF 1	9
12	ERASE OFF 2	RECORD OFF 2	11
14	EXTERNAL R.R. 1	EXTERNAL R.R. 0	13
16	RECORD HOLD	EXTERNAL R.R. 2	15

CNJ201
NOISE REDUCTION
CONNECTOR

2	DOLBY RELAY LOW 0	SHIELD	1
4	DOLBY RELAY LOW 1	DOLBY GND 0	3
6	DOLBY RELAY LOW 2	DOLBY GND 1	5
8	RESERVED	DOLBY GND 2	7
10	N/C	RESERVED	9

CNJ211-1,2,3
CHANNEL BOARD 0-2
CONNECTOR

B			A
1	ANALOG GROUND		1
2			2
3	+ REPRO N (**)	A. GND (**)	3
4	- REPRO N (**)	A. GND. (**)	4
5	REPRO SHIELD N (**)	BIAS N (**)	5
6	+ CUE N (**)	ERASE N (**)	6
7	-CUE N (**)	XFTD DOWN	7
8	CUE SHIELD (**)	REC DR N	8
9	CAL SUM ACN GND (++)	XFTD UP	9
10	CAL SUM ACN	SLATE FEED	10
11	CAL SUM BUSS	SLATE BUSS	11
12	METER GROUND	METER N (**)	12
13	INPUT UNCAL SEND N (**)	+ INPUT N (**)	13
14	INPUT UNCAL RETURN N (**)	- INPUT N (**)	14
15	INPUT UNCAL SHIELD N (**)	INPUT SHIELD N (**)	15
16	OUTPUT UNCAL SEND N (**)	+ OUTPUT N	16
17	OUTPUT UNCAL RETURN N (**)	- OUTPUT N (**)	17
18	OUTPUT UNCAL SHIELD N (**)	OUTPUT SHIELD N (**)	18
19			19
20			20
21			21
22	+15V		22
23	-15V		23
24	+18V		24
25	-18V		25
26	KEY	KEY	26
27	+5V		27
28			28
29	DOLBY GND N (**)	DOLBY RELAY LOW N (**)	29
30	100 KHZ	400 KHZ	30
31	ERASE OFF N (**)	RECORD OFF N (**)	31
32	ERASE PULSE (O/E) (+)	BIAS PULSE B	32
33	ERASE CLOCK	BIAS CLOCK	33
34	SYNC N	EXTERNAL R.R. N (**)	34
35	WR B	RECORD HOLD	35
36	ADTA 6	ADTA 7	36
37	ADTA 4	ADTA 5	37
38	ADTA 2	ADTA 3	38
39	ADTA 0	ADTA 1	39
40	PA 1	PA 0	40
41	PA 3	PA 2	41
42	PA 5	PA 4	42
43	PA 7	PA 6	43
44	PA 9	PA 8	44
45	DRAWER N	CHAN N (**)	45
46		WRBS	46
47			47
48	HD STK POLL	GLOBAL DIM	48
49	DIGITAL GROUND		49
50			50

CNJ213-1,2,3
RECORD AND ERASE HEAD

1	BIAS SHIELD (**)
2	BIAS N (**)
3	ERASE SHIELD (**)
4	ERASE N (**)
5	SHIELD N
6	REC DR N

CNJ212-1,2,3
INPUT/OUTPUT
CONNECTOR

1	+ INPUT N (**)
2	- INPUT N (**)
3	INPUT SHIELD (**)
4	+ OUTPUT N (**)
5	- OUTPUT N (**)
6	OUTPUT SHIELD (**)

CNJ915
POWER SUPPLY
CONNECTOR

1	ANALOG GROUND
2	
3	+18V
4	-18V
5	+5V
6	
7	DIGITAL GROUND
8	
9	KEY

CNJ203
SYNC CONTROL
CONNECTOR

1	+5V
2	RESERVED
3	CH2 SYNC
4	CH1 SYNC
5	CH0 SYNC
6	A. GND

CNJ200
PROCESSOR INTERFACE
CONNECTOR

2	BCSB (*)	SHIELD	1
4	RESET (*)	BIAS REF.	3
6	WRBS	BIAS PULSE	5
8	WR B	ACALINT	7
10	RD B	ACNTINT	9
12	AADR 6	AADR 7	11
14	AADR 4	AADR 5	13
16	AADR 2	AADR 3	15
18	AADR 0	AADR 1	17
20	ADTA 6	ADTA 7	19
22	ADTA 4	ADTA 5	21
24	ADTA 2	ADTA 3	23
26	ADTA 0	ADTA 1	25
28	A9	A8 (*)	27
30	A11	A10 (*)	29
32			31
34			33

CNJ210
AUDIO MASTER BOARD
CONNECTOR

B			A
1	ANALOG GROUND		1
2			2
3			3
4			4
5			5
6	CAL SUM ACN GND (++)		6
7	CAL SUM ACN	SLATE FEED	7
8	CAL SUM BUSS	SLATE BUSS	8
9			9
10			10
11			11
12			12
13	+15V		13
14	-15V		14
15	+18V		15
16	-18V		16
17	KEY	KEY	17
18			18
19	+5V		19
20			20
21	A11 (ROMCS) (*)	A9 (ATOD) (*)	21
22	BCSB (*)	BIAS REF	22
23	100KHZ	400KHZ	23
24	ERASE PULSE E (+)	BIAS PULSE B	24
25	ERASE PULSE 0 (+)	BIAS PULSE	25
26	ERASE CLOCK	BIAS CLOCK	26
27	WR B	WRBS	27
28	RD B	RECORD HOLD	28
29	AADR 6 (*)	AADR 7 (*)	29
30	AADR 4 (*)	AADR 5 (*)	30
31	AADR 2 (*)	AADR 3 (*)	31
32	AADR 0 (*)	AADR 1 (*)	32
33	ADTA 6 (*)	ADTA 7 (*)	33
34	ADTA 4 (*)	ADTA 5 (*)	34
35	ADTA 2 (*)	ADTA 3 (*)	35
36	ADTA 0 (*)	ADTA 1 (*)	36
37	PA 1 (*)	PA 0 (*)	37
38	PA 3 (*)	PA 2 (*)	38
39	PA 5 (*)	PA 4 (*)	39
40	PA 7 (*)	PA 6 (*)	40
41	PA 9 (*)	PA 8 (*)	41
42	CHAN 1 (*)	CHAN 0 (*)	42
43	CHAN 3 (*)	CHAN 2 (*)	43
44	CHAN 5 (*)	CHAN 4 (*)	44
45	CHAN 7 (*)	CHAN 6 (*)	45
46	DRAWER 1 (*)	DRAWER 0 (*)	46
47	DRAWER 3 (*)	DRAWER 2 (*)	47
48	HDSTK POLL	GLOBAL DIM (*)	48
49	DIGITAL GROUND		49
50			50

CNJ202
ALIGNMENT I/O
CONNECTOR

1	CAL SUM BUSS
2	SHIELD
3	SLATE FEED
4	SHIELD

CNJ205
LOGIC INTERCONNECT
CONNECTOR

2	BIAS REF	SHIELD	1
4	A11	A9	3
6	A8	BCSB	5
8	A10	RESET	7
10	ERASE CLOCK	BIAS CLOCK	9
12	ERASE PULSE E	BIAS PULSE B	11
14	ERASE PULSE 0	RECORD HOLD	13
16	WR B	ACNLINT	15
18	RD B	ACNTINT	17
20	ADTA 6	ADTA 7	19
22	ADTA 4	ADTA 5	21
24	ADTA 2	ADTA 3	23
26	ADTA 0	ADTA 1	25
28	PA 1	PA 0	27
30	PA 3	PA 2	29
32	PA 5	PA 4	31
34	PA 7	PA 6	33
36	PA 9	PA 8	35
38	CHAN 1	CHAN 0	37
40	CHAN 3	CHAN 2	39
42	CHAN 5	CHAN 4	41
44	CHAN 7	CHAN 6	43
46	DRAWER 1	DRAWER 0	45
48	DRAWER 3	DRAWER 2	47
50	HDSTK POLL	GLOBAL DIM	49

NOTES

(*) REQUIRES PULL UP RESISTOR 10K SIP FROM +5 VOLTS
(**)N - CHANNEL NUMBER A - 0, B - 1, C - 2
CHANNEL 0 TO PIN 45A OF CNJ211-1
EXAMPLE: CHANNEL 1 TO PIN 45A OF CNJ211-2
CHANNEL 2 TO PIN 45A OF CNJ211-3

XFTD CHART

7	XFTD DOWN	7	XFTD DOWN	7	XFTD DOWN
8	REC DR N	8	REC DR N	8	REC DR N
9	XFTD UP	9	XFTD UP	9	XFTD UP

(+) ERASE E TO CNJ211-2 PIN 32B, ERASE 0 TO CNJ211-1,3 PIN 32B
(++)ALL CAL SUM ACN GNDs ARE BUSSED TOGETHER, NOT TO GROUND

ADM BOARD
BOARD NO. 1-619-167-11 & HIGHER
APR-5002/5003V

ALN BOARD (1-619-168-12)
Component Side

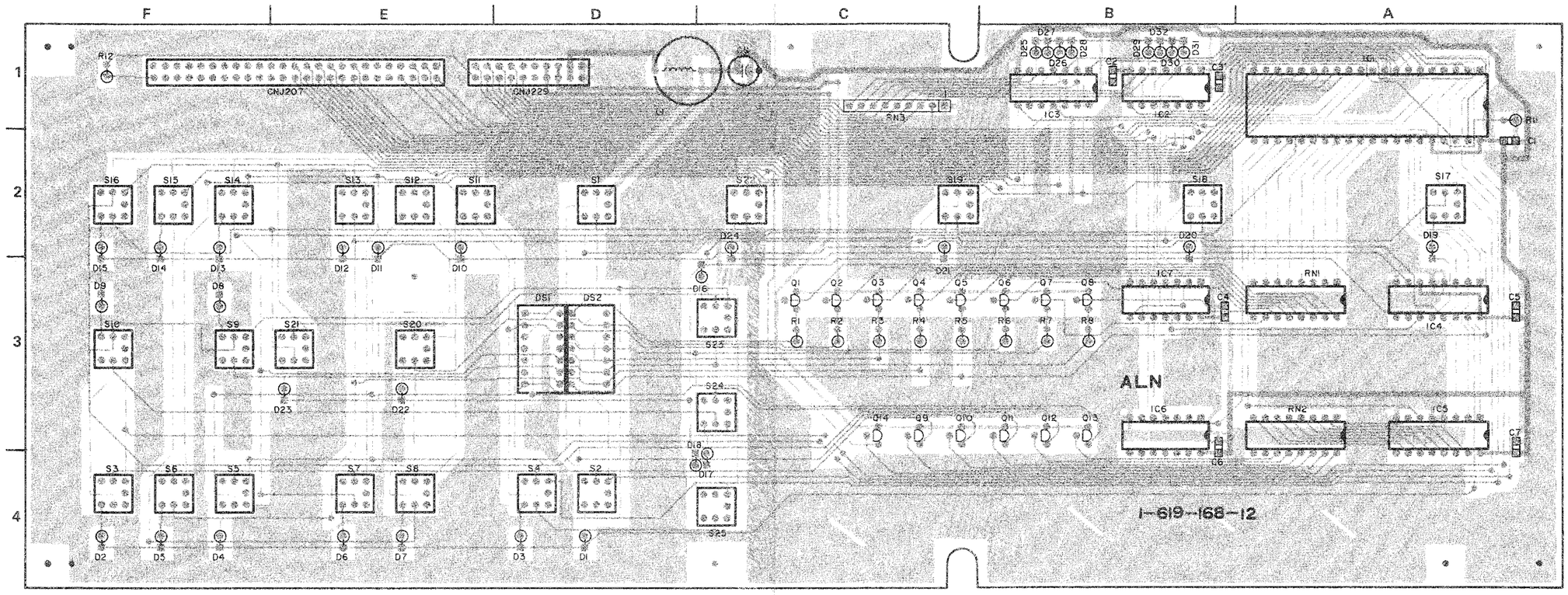

■ SOLDER SIDE PATTERN 1-619-168-12
■ COMPONENT SIDE PATTERN 1-619-168-12

ALN BOARD

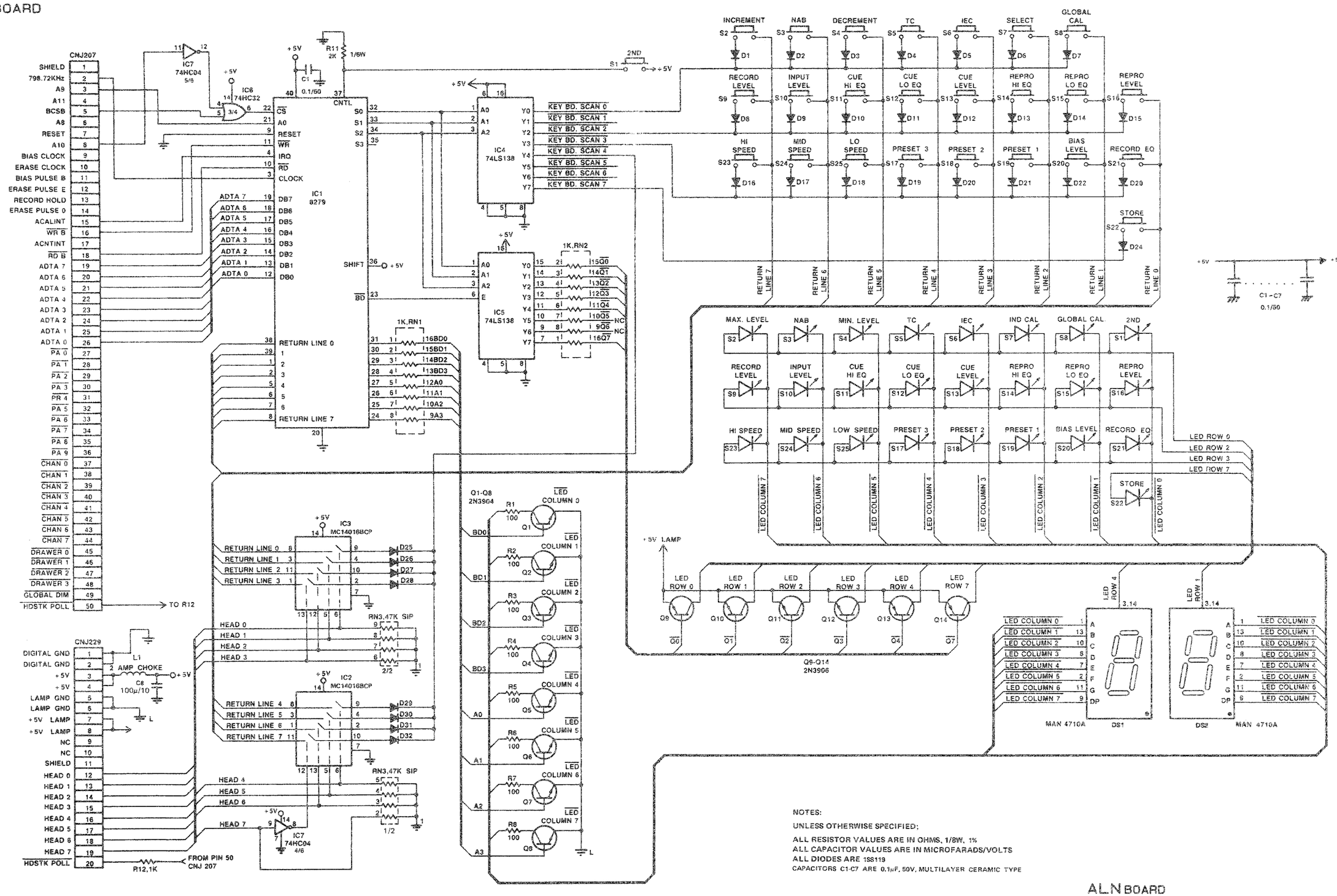

NOTES:

UNLESS OTHERWISE SPECIFIED;

ALL RESISTOR VALUES ARE IN OHMS, 1/8W, 1%
ALL CAPACITOR VALUES ARE IN MICROFARADS/VOLTS
ALL DIODES ARE 1SS119
CAPACITORS C1-C7 ARE 0.1μF, 50V, MULTILAYER CERAMIC TYPE

ALN BOARD
BOARD NO. 1-619-168-11 & HIGHER
APR-5002/5003V

CNL BOARD (1-619-158-11) S/N: APR-5002 20001 TO 20300
Component Side

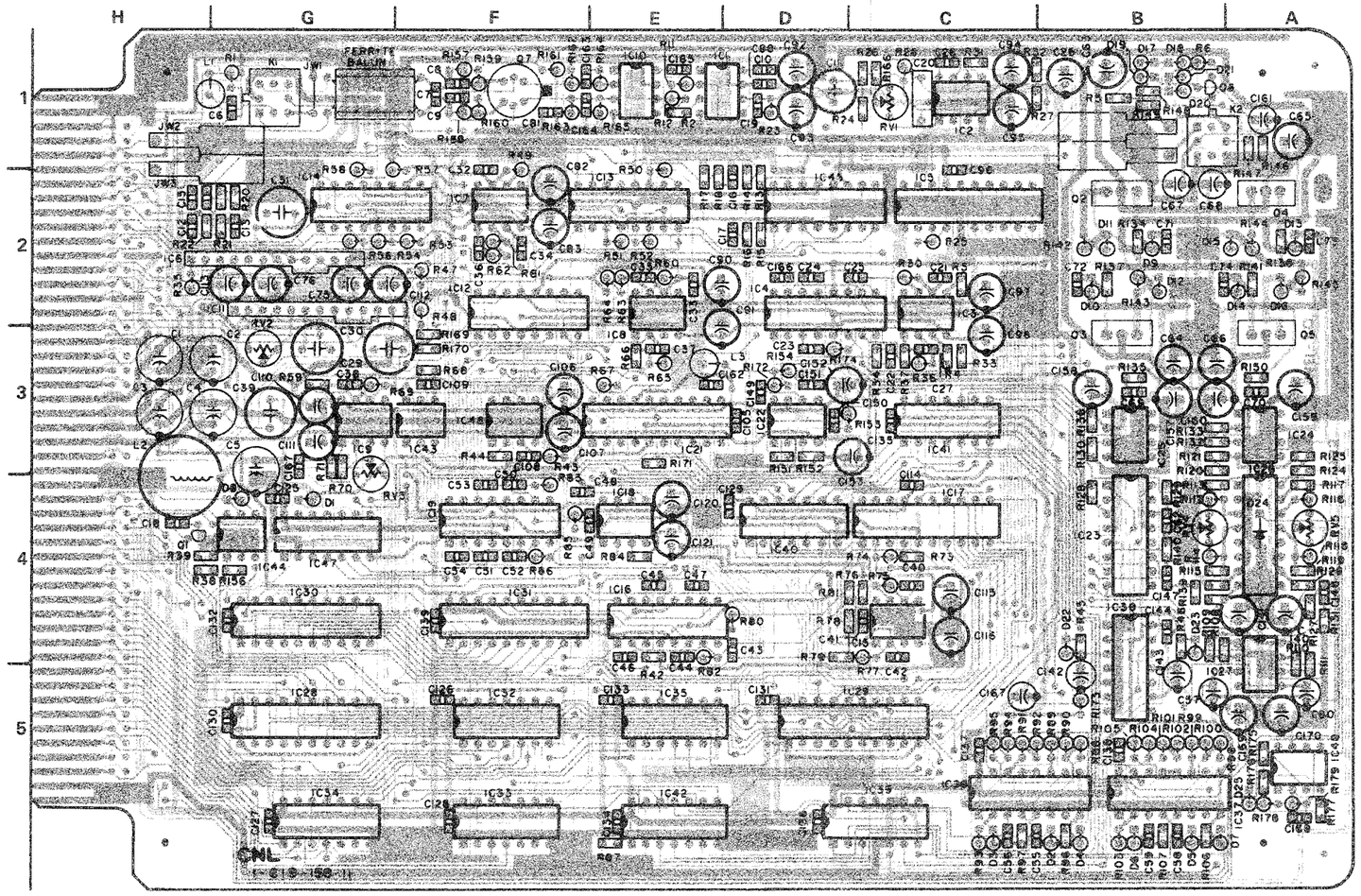

■ SOLDER SIDE PATTERN 1-619-158-11
● COMPONENT SIDE PATTERN 1-619-158-11

CNL BOARD (1-619-158-15)
Component Side

S/N; APR-5002 20301 AND HIGHER
S/N; APR-5003V 10001 AND HIGHER

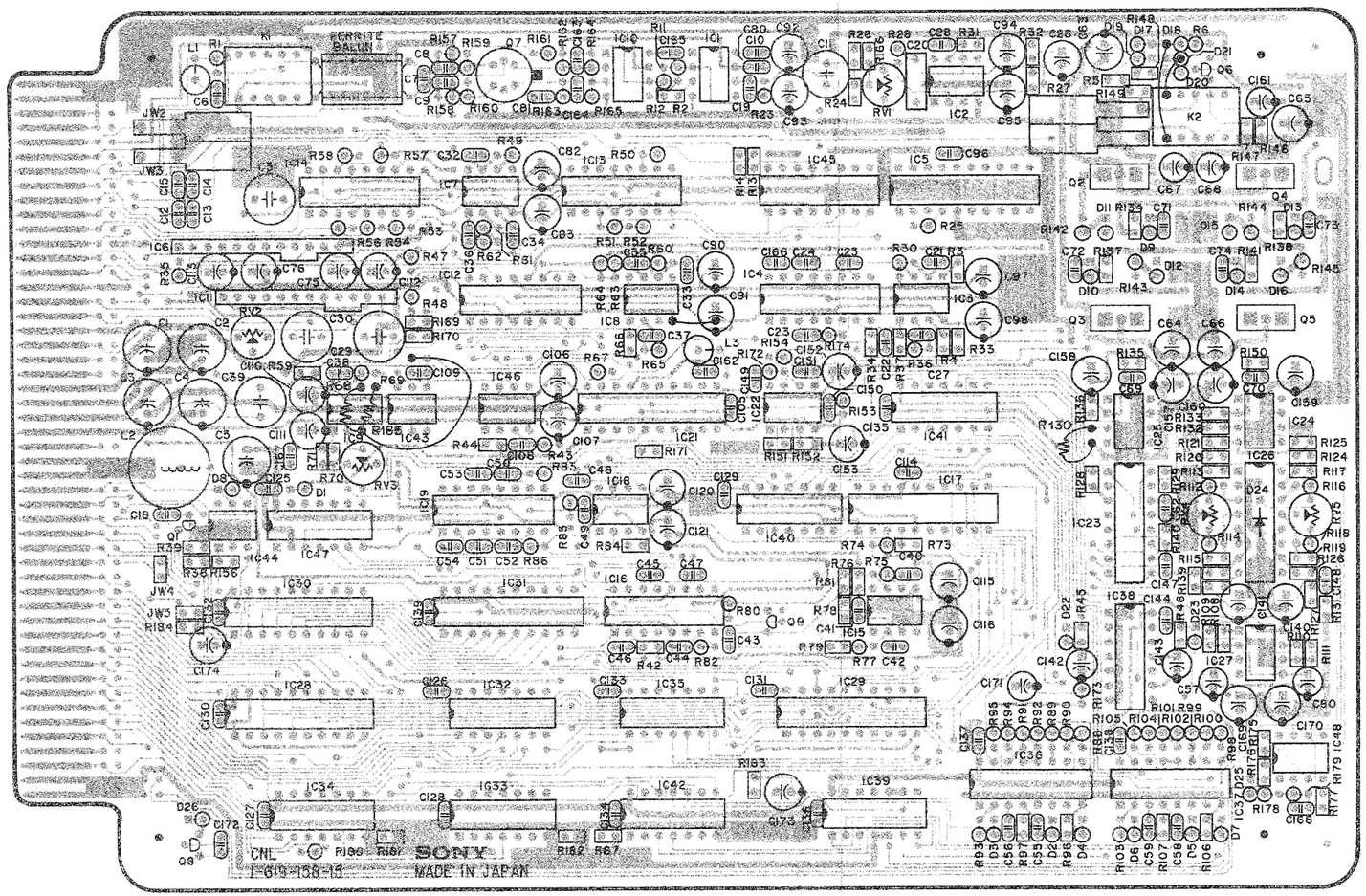

■ SOLDER SIDE PATTERN

CNL BOARD

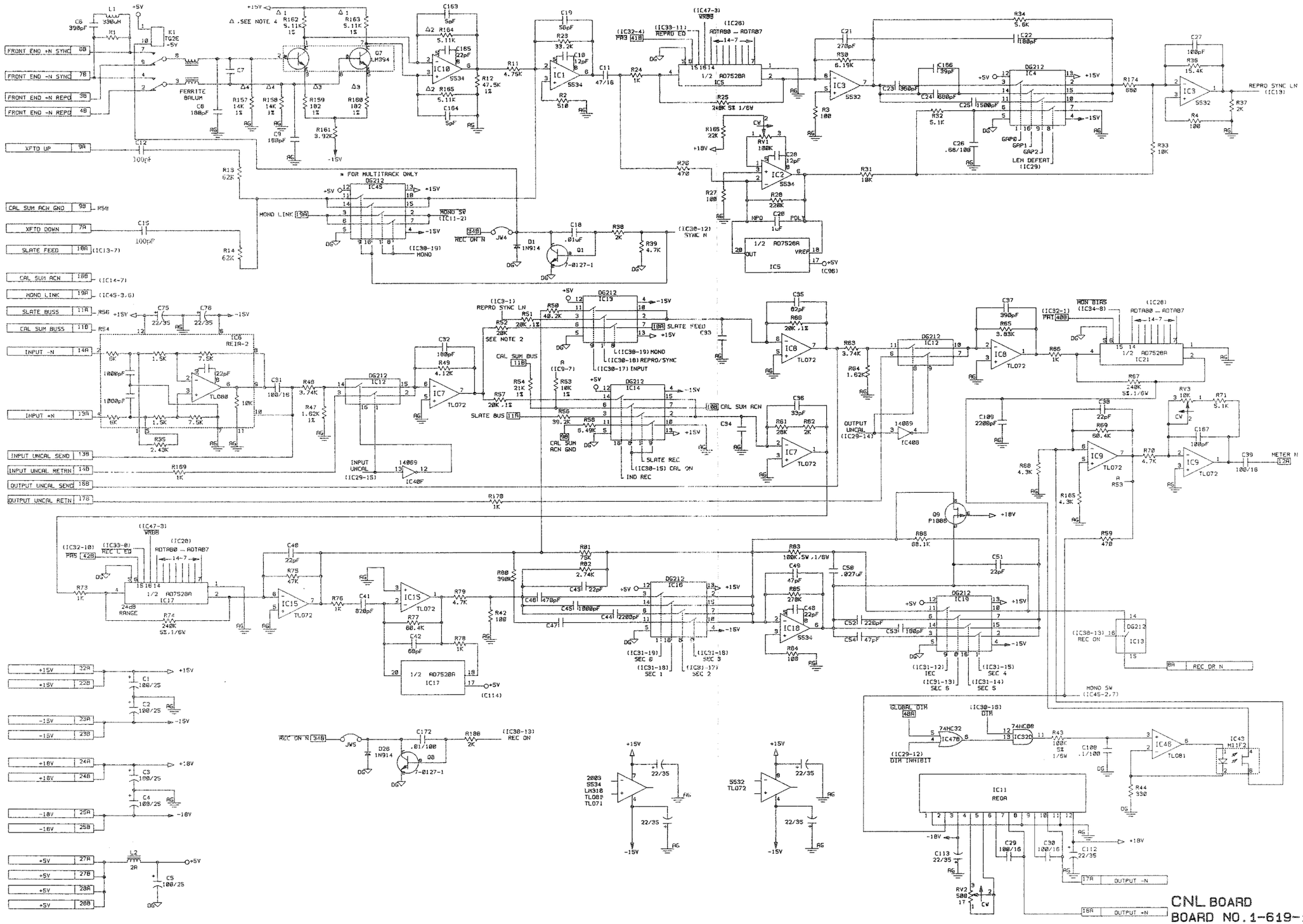
FRONT END +N SYNC 8B
FRONT END -N SYNC 7B
FRONT END +N REPRO 3B
FRONT END -N REPRO 4B
XFTD UP 9A
CAL SUM ACN GND 9B
XFTD DOWN 7A
SLATE FEED 10A
CAL SUM ACN 18B
MONO LINK 19A
SLATE BUSS 11A
CAL SUM BUSS 11B
INPUT -N 14A
INPUT +N 13A
INPUT UNCAL SEND 13B
INPUT UNCAL RETRN 14B
OUTPUT UNCAL SEND 18B
OUTPUT UNCAL RETN 17B
REPRO SYNC LN (IC13)
MONO BIAS
OUTPUT -N 17A
OUTPUT +N 16A
REC DR N 8A
CNL BOARD
BOARD NO.1-619-158-11 & HIGHER
APR-5002/5003V

CNL BOARD

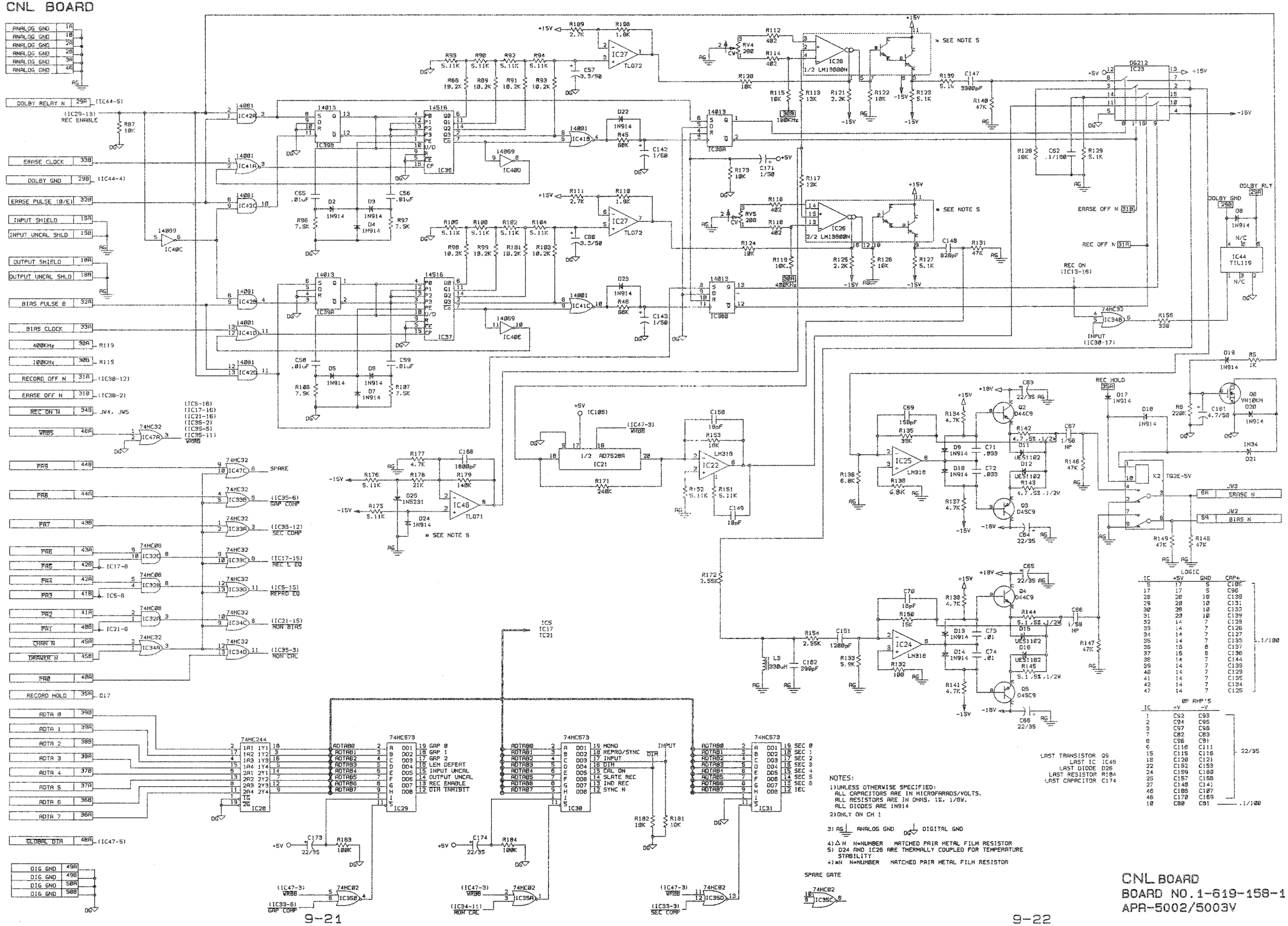

CNL BOARD
BOARD NO.1-619-158-11 & HIGHER
APR-5002/5003V

CNX BOARD (1-619-162-11)
Component Side

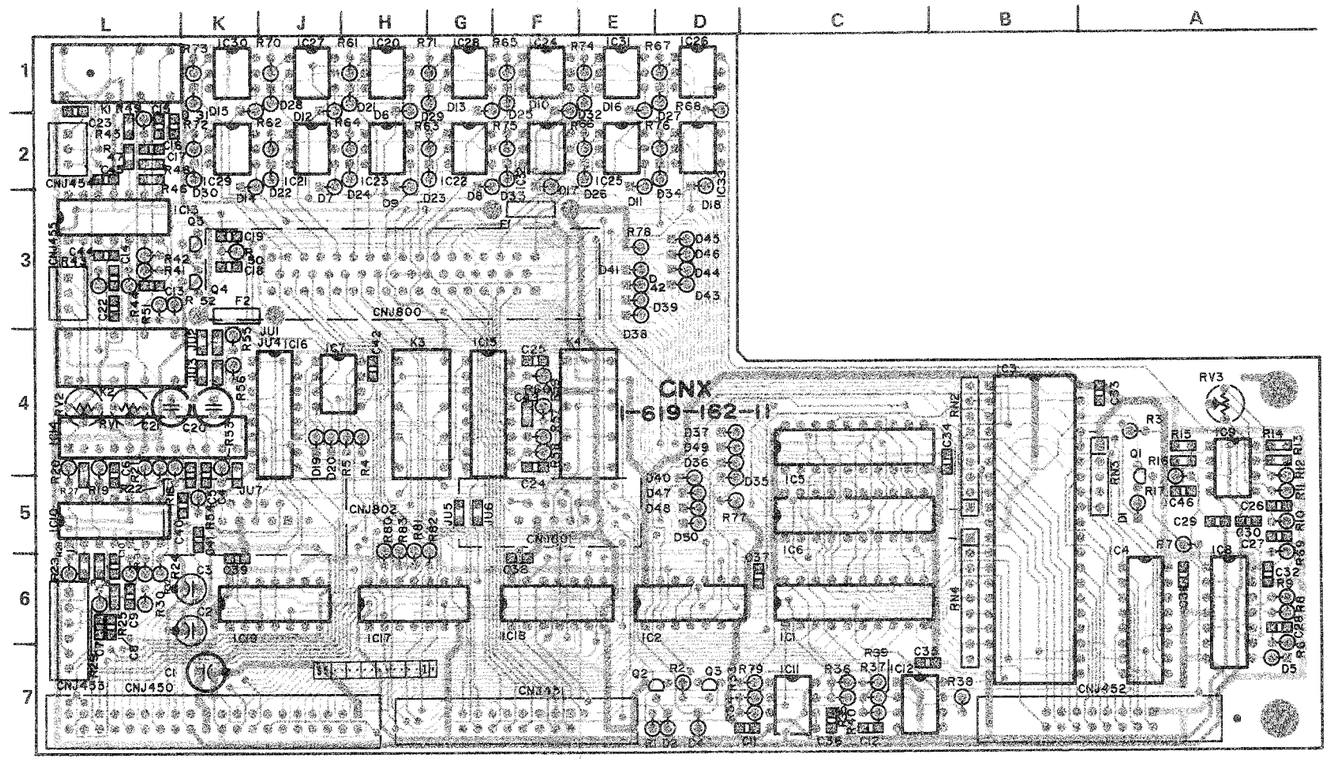

■ SOLDER SIDE PATTERN 1-619-162-11
■ COMPONENT SIDE PATTERN 1-619-162-11

CNX BOARD

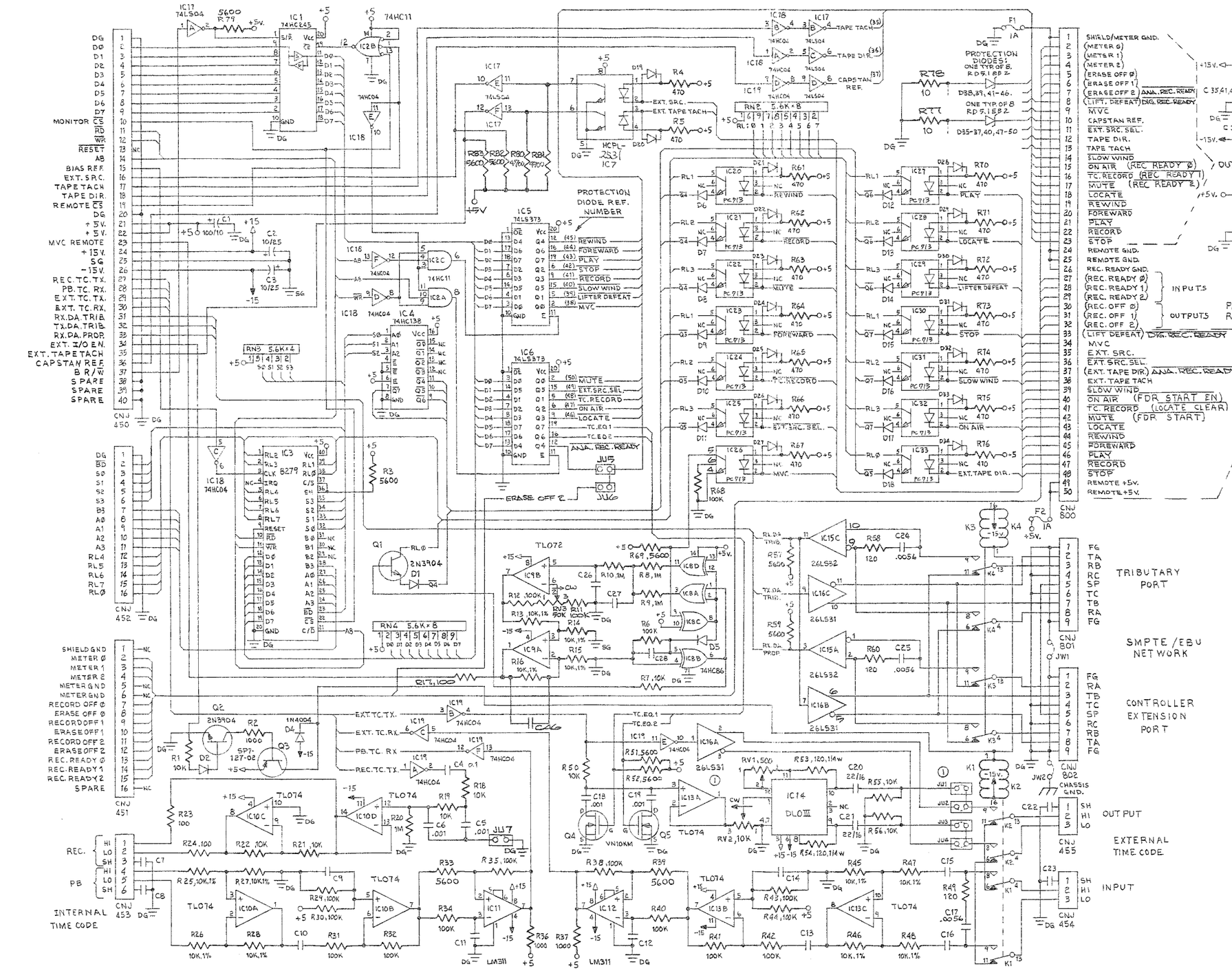

GENERAL NOTES:

UNLESS OTHERWISE SPECIFIED:

1. ALL CAPACITORS ARE 0.1 MICROFARAD, 50 VOLTS, NONPOLARIZED, MULTILAYER CERAMIC TYPE.
2. ALL DIODES ARE 1SS119
   ALL ZENERS ARE RD5.1EB2
3. ALL RESISTORS ARE IN OHMS, 1/6 W., 5%, VERTICAL LEAD TYPE.
4. IC'S 17, 18, AND 19 POWER PINOUTS ARE: PIN 14: +5V.
   PIN 7: DG.

SPECIFIC NOTES:

① INSTALL JU1, JU3 FOR BALANCED DIFFERENTIAL TIMECODE OUTPUT. RV1 ADJUSTS SYMMETRY, RV2 ADJUSTS LEVEL. INSTALL JU2, JU4, FOR RS-422 LEVEL TIMECODE OUTPUT.

② PARALLEL REMOTE FUNCTIONS IN PARENTHESIS ARE UNIQUE TO APR-5000 SERIES MACHINES.

③ INSTALL JU5 AND JU7 FOR USE IN PCM SERIES MACHINES. INSTALL JU6 FOR USE IN APR SERIES MACHINES.

CNX BOARD
BOARD NO. 1-619-162-11 & HIGHER
APR-5002/5003V

CPU BOARD (1-619-161-12)
Component Side

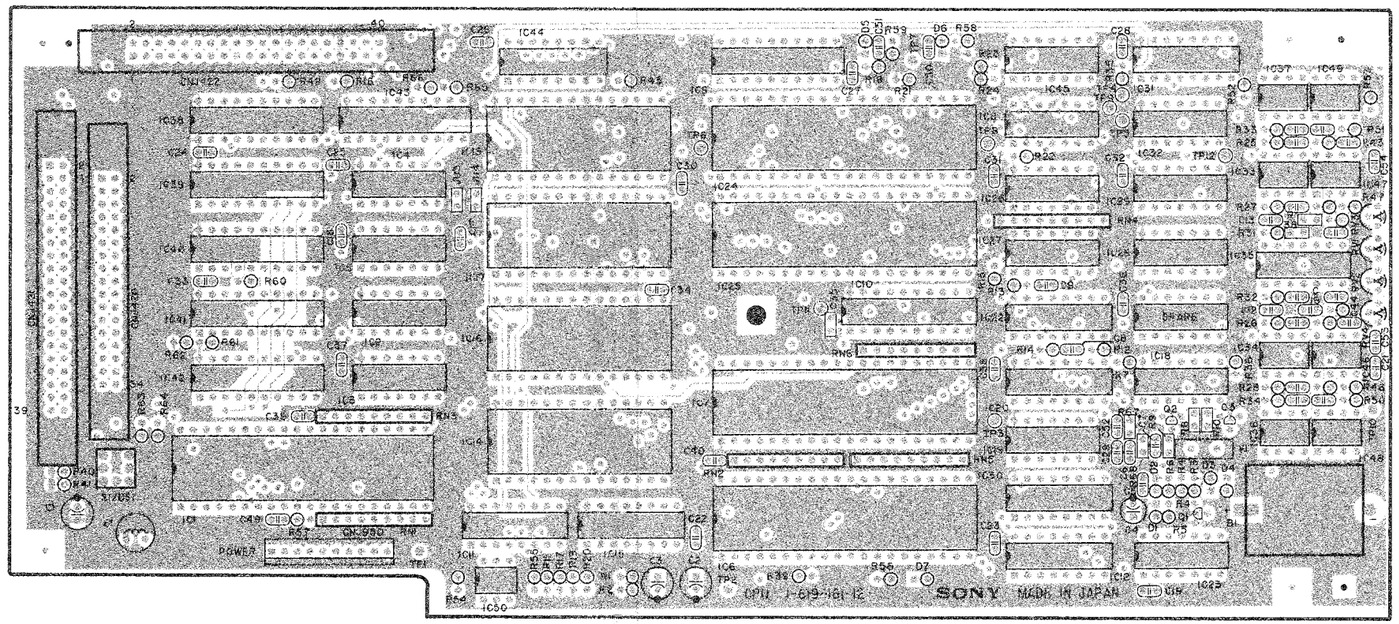

■ SOLDER SIDE PATTERN

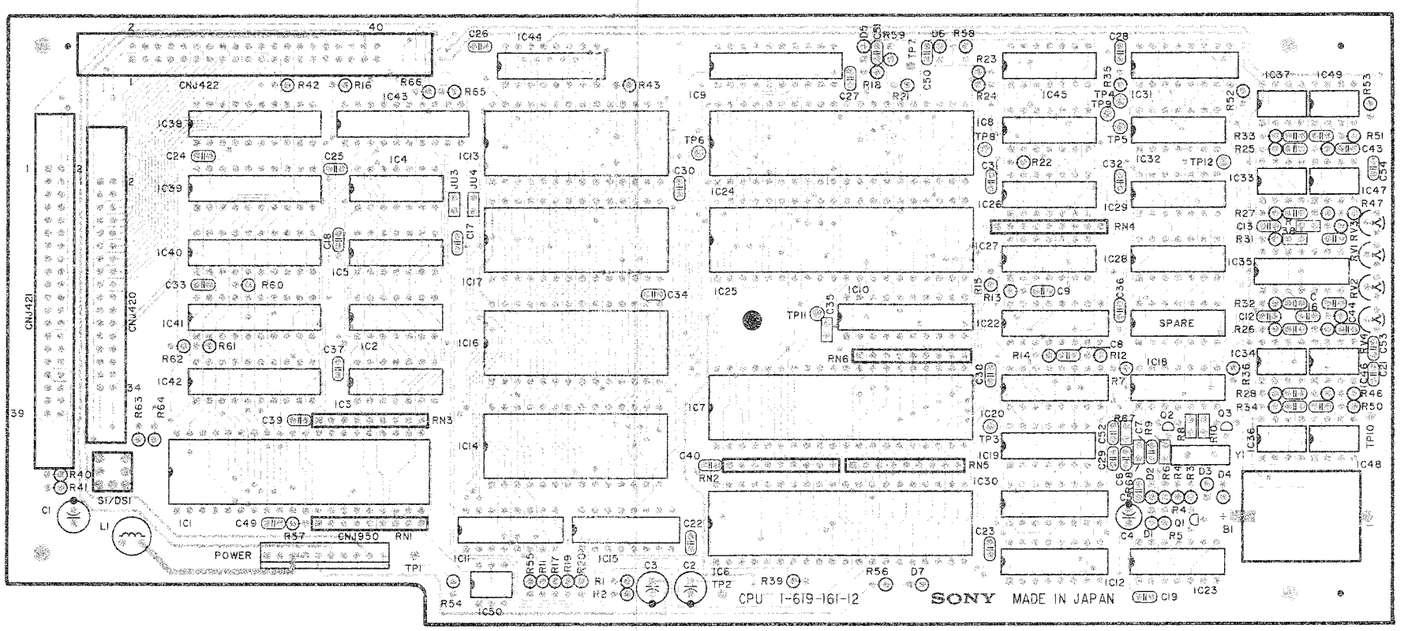

■ SOLDER SIDE PATTERN

TECHNICAL UPDATE

APR-5000 SERIES RECORDERS/REPRODUCERS

Recent versions of the subject Recorders/Reproducers are fitted with a new Controller/Processor Unit (CPU) with expanded memory capabilities. This document provides a schematic diagram (3 sheets) for the new CPU.

The Expanded-memory CPUs may be identified by their part numbers. Units manufactured in the United States are numbered T-9412-327-4, while units of Japanese manufacture are numbered 1-619-161-12.

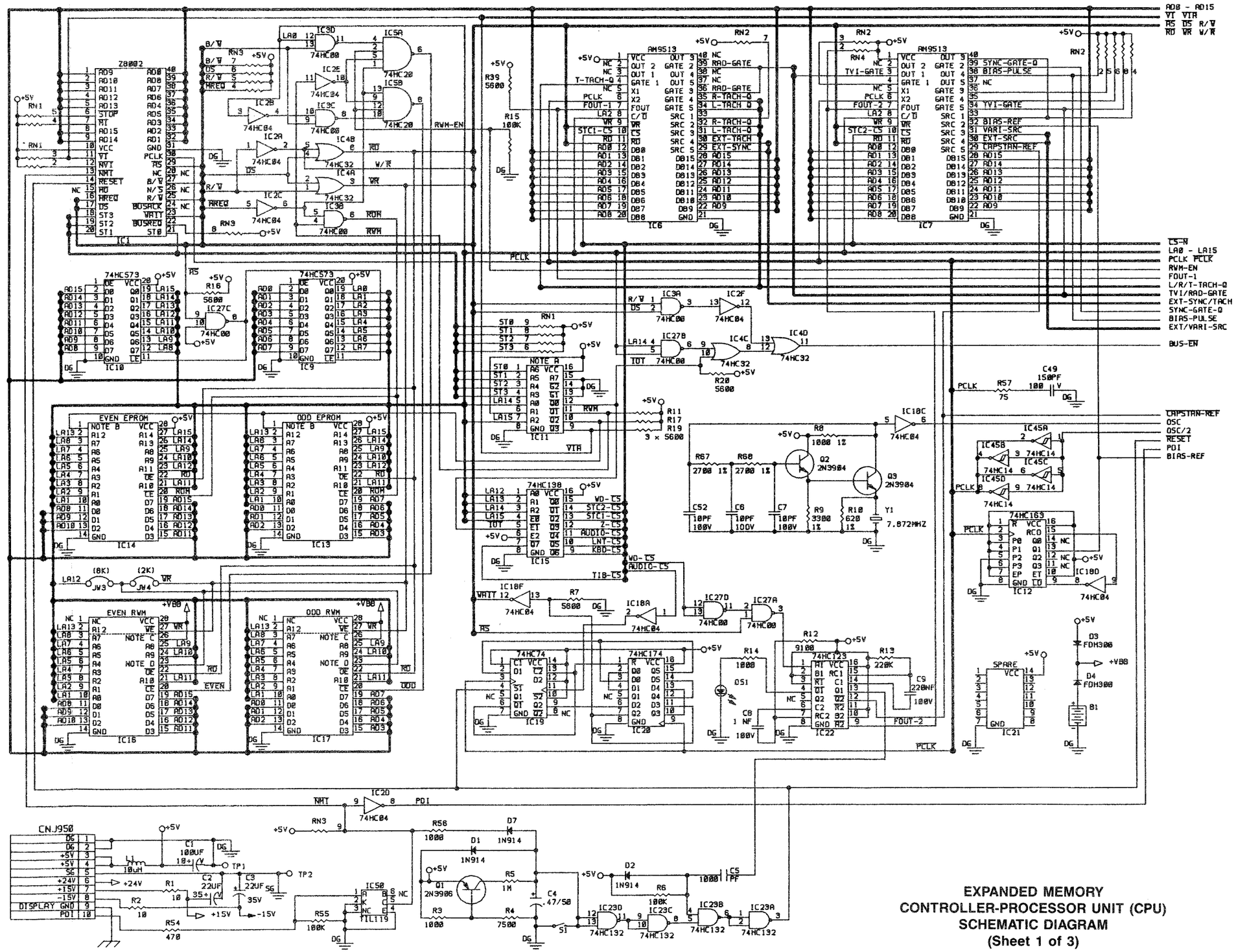

EXPANDED MEMORY
CONTROLLER-PROCESSOR UNIT (CPU)
SCHEMATIC DIAGRAM
(Sheet 1 of 3)

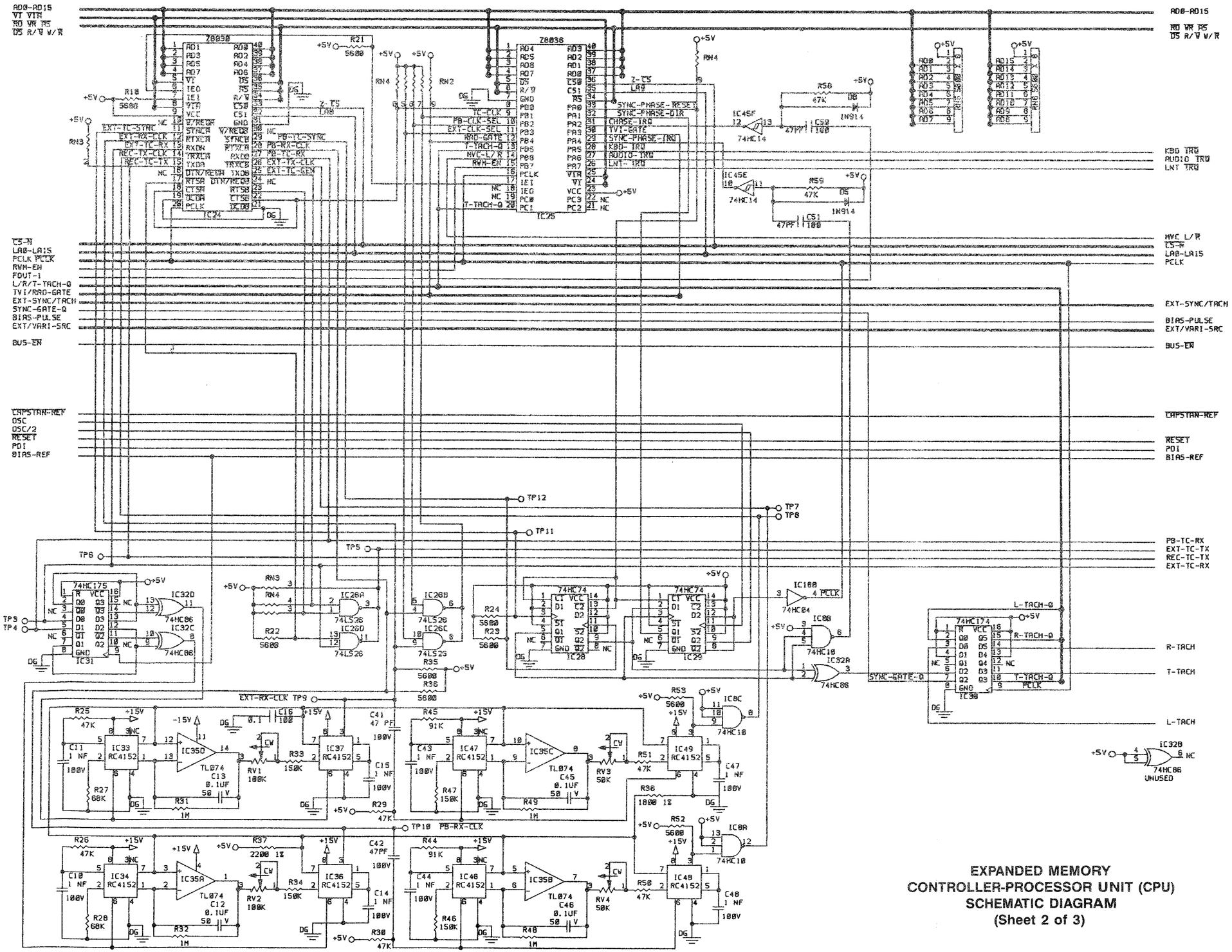

EXPANDED MEMORY
CONTROLLER-PROCESSOR UNIT (CPU)
SCHEMATIC DIAGRAM
(Sheet 2 of 3)

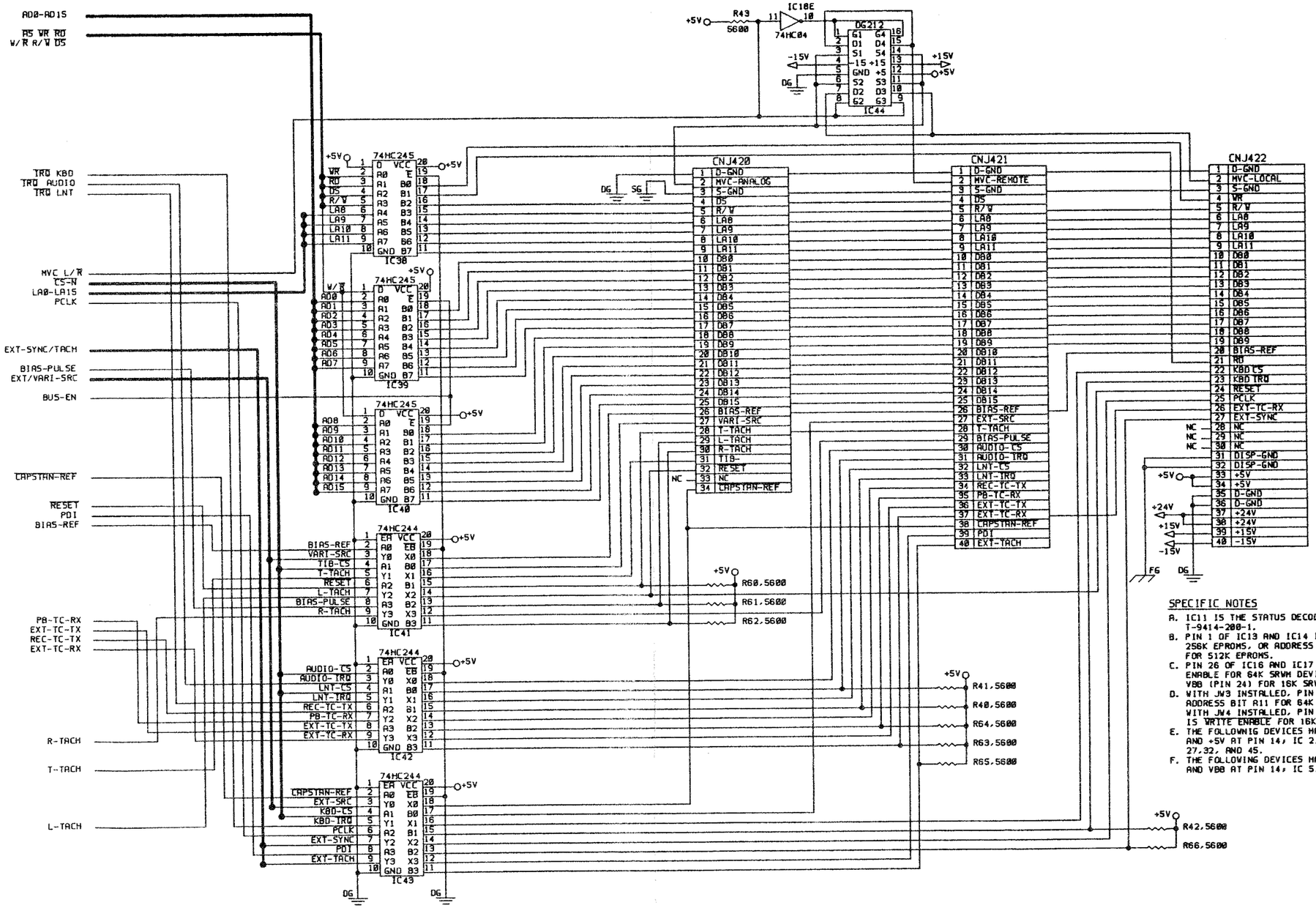

EXPANDED MEMORY CONTROLLER-PROCESSOR UNIT (CPU) SCHEMATIC DIAGRAM (Sheet 3 of 3)

CPU BOARD

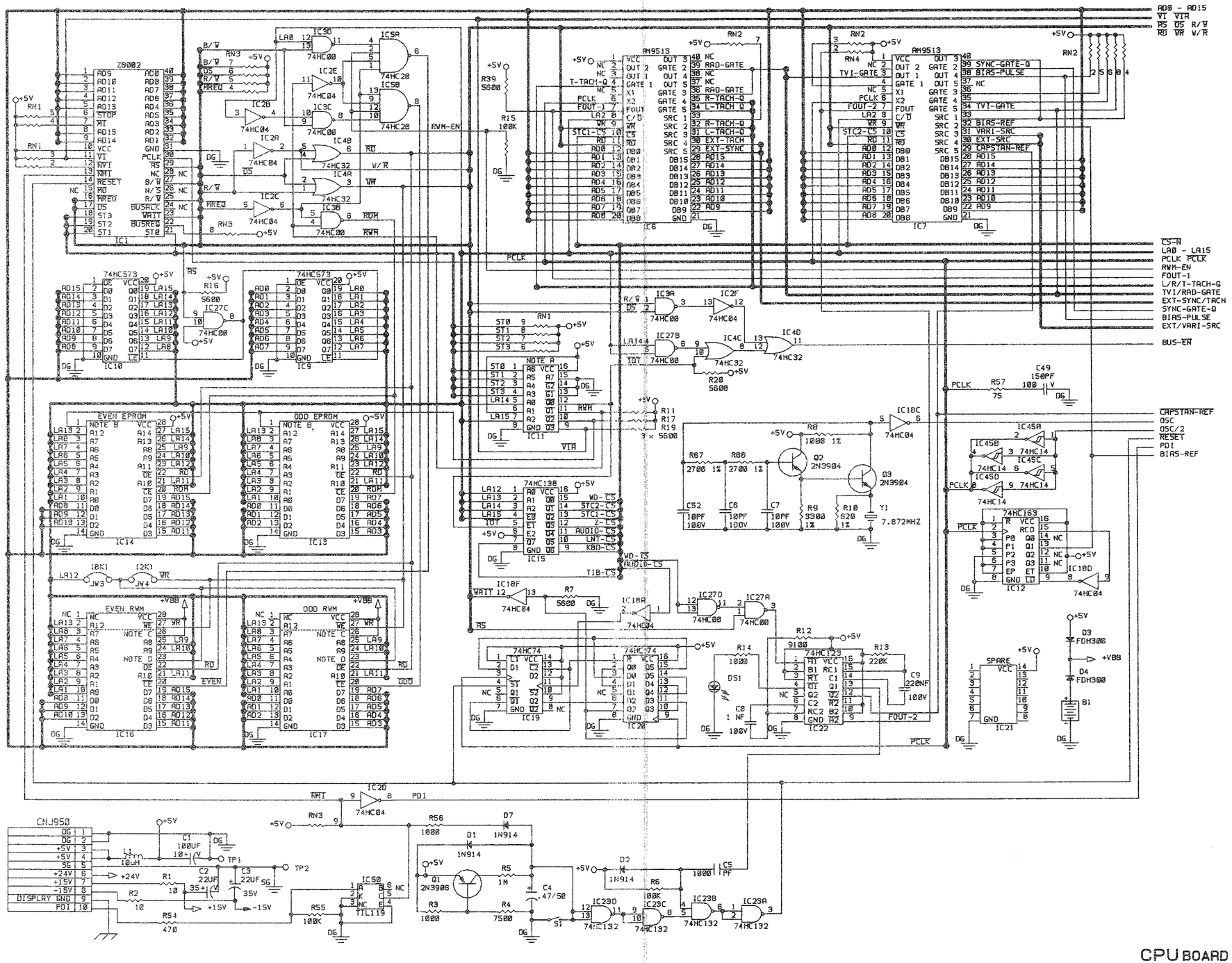

CPU BOARD
BOARD NO.1-619-161-11 & HIGHER
APR-5002/5003V

CPU BOARD

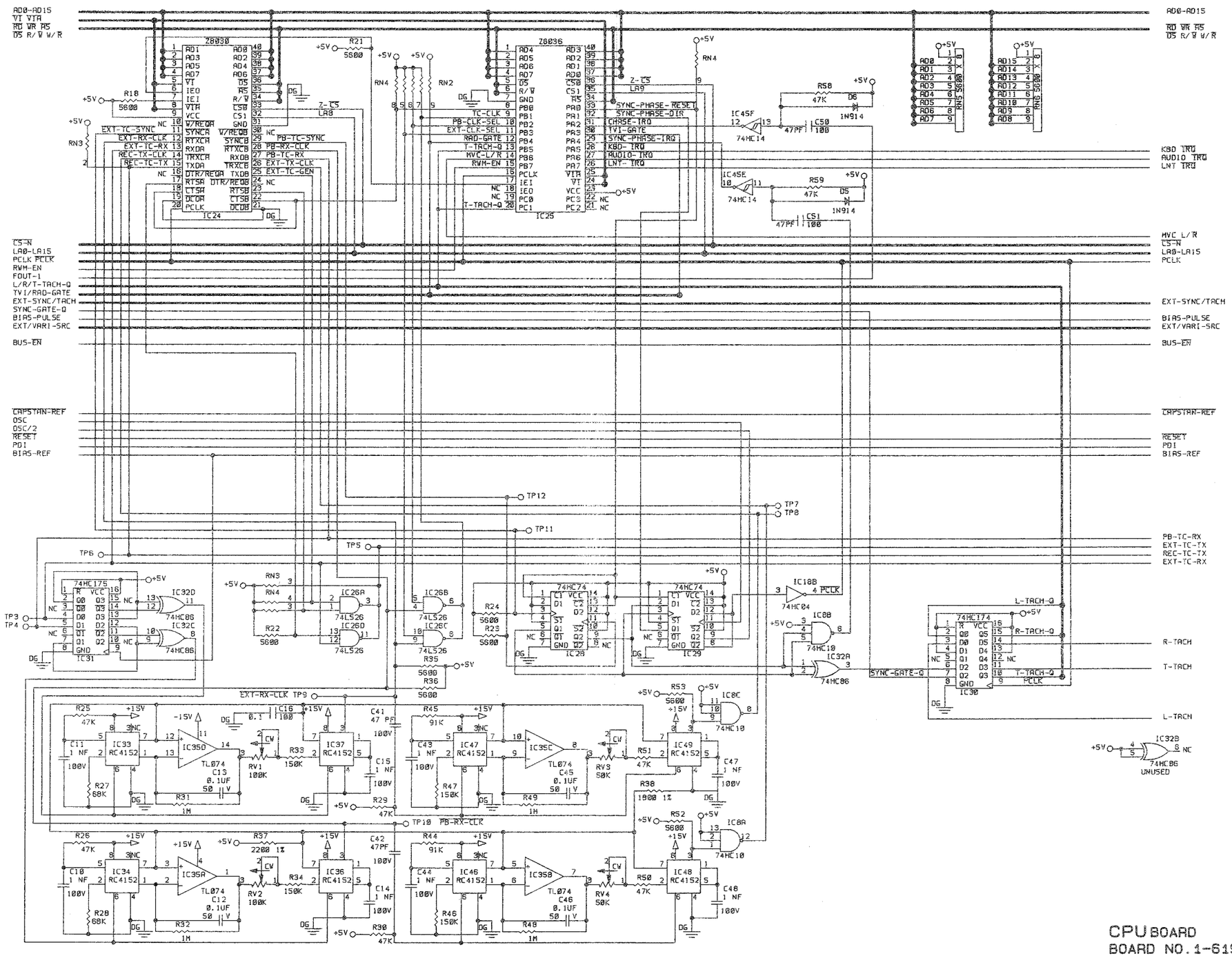

CPU BOARD
BOARD NO. 1-619-161-11 & HIGHER
APR-5002/5003V

CPU BOARD

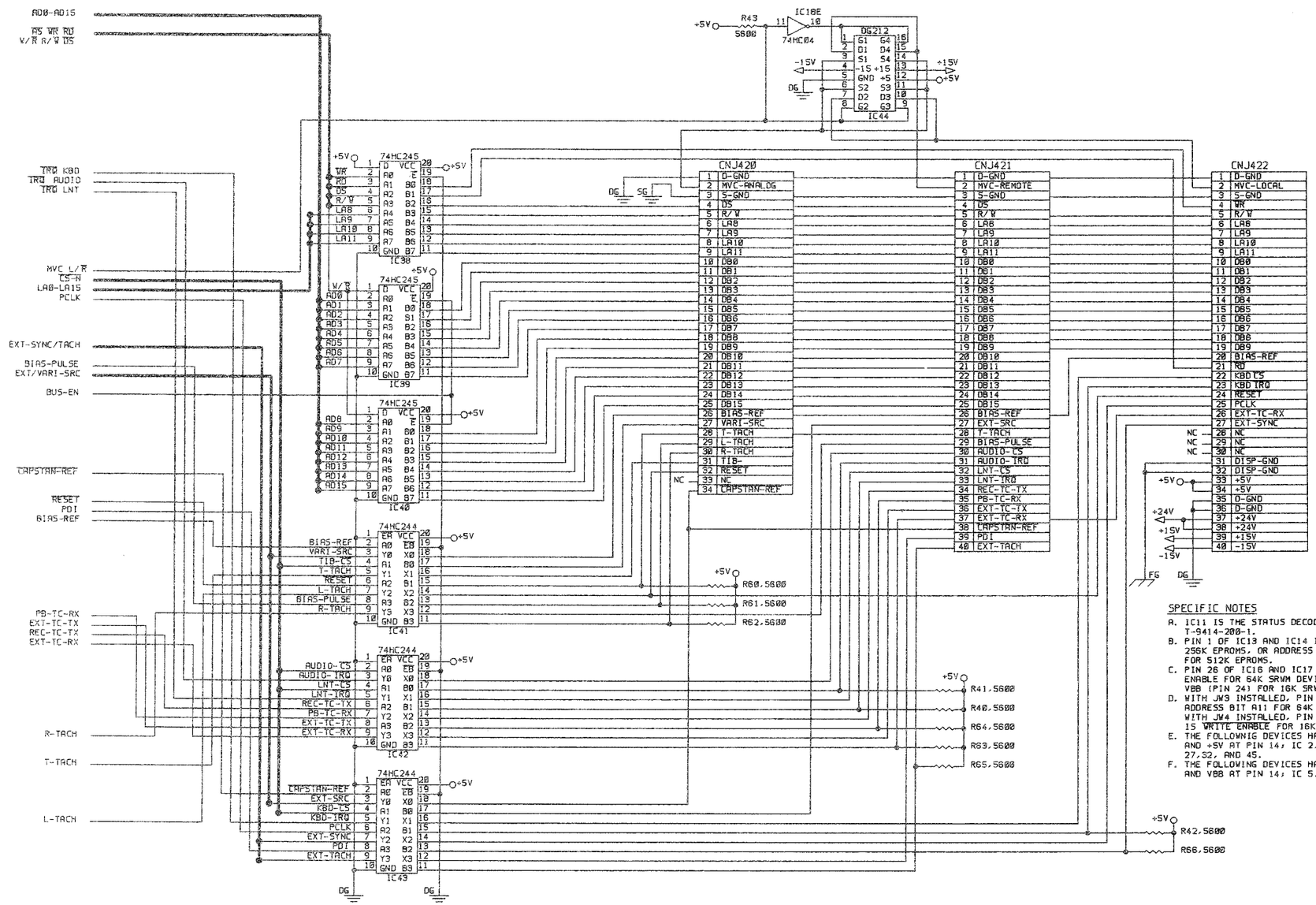

SPECIFIC NOTES

A. IC11 IS THE STATUS DECODER PROM, T-9414-200-1.
B. PIN 1 OF IC13 AND IC14 IS VPP FOR 256K EPROMS, OR ADDRESS BIT A15 FOR 512K EPROMS.
C. PIN 26 OF IC16 AND IC17 IS CHIP ENABLE FOR 64K SRWM DEVICES, OR VBB (PIN 24) FOR 16K SRWM DEVICES.
D. WITH JW3 INSTALLED, PIN 23 IS ADDRESS BIT A11 FOR 64K SRWM DEVICES. WITH JW4 INSTALLED, PIN 23 (PIN 21) IS WRITE ENABLE FOR 16K SRWM DEVICES.
E. THE FOLLOWNIG DEVICES HAVE DG AT PIN 7 AND +5V AT PIN 14; IC 2,3,4,8,18,26, 27,32, AND 45.
F. THE FOLLOWING DEVICES HAVE DG AT PIN 7 AND VBB AT PIN 14; IC 5,23.

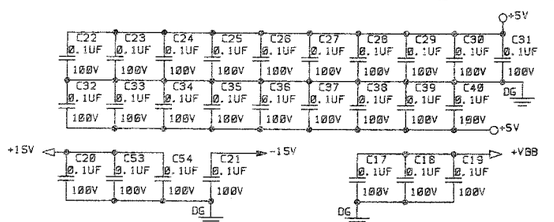

TEST POINTS

1. DIGITAL GROUND
2. SIGNAL GROUND
3. EXT-TC-RX
4. PB-TC-RX
5. EXT-TC-TX
6. REC-TC-TX
7. EXT-TX-CLK
8. REC-TX-CLK
9. EXT-RX-CLK
10. PB-RX-CLK
11. EXT-TC-SYNC
12. PB-TC-SYNC

NEXT DESIGNATIONS

B, 2	Q, 4
C, 55	R, 69
D, 8	RN, 7
DS, 2	RV, 5
IC, 51	S, 2
JW, 13 *	TP, 13
L, 2	Y, 2

* JW1, JW2, AND JW5 - JW11 HAVE BEEN RETIRED.

CPU BOARD
BOARD NO.1-619-161-11 & HIGHER
APR-5002/5003V

CTM BOARD (1-619-165-12)
Component Side

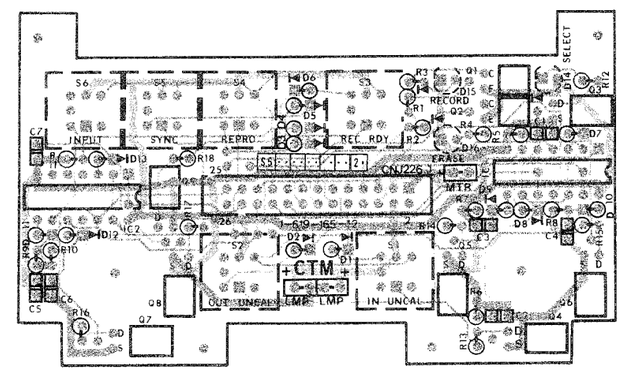

■ SOLDER SIDE PATTERN 1-619-165-12
■ COMPONENT SIDE PATTERN 1-619-165-12

CTM BOARD

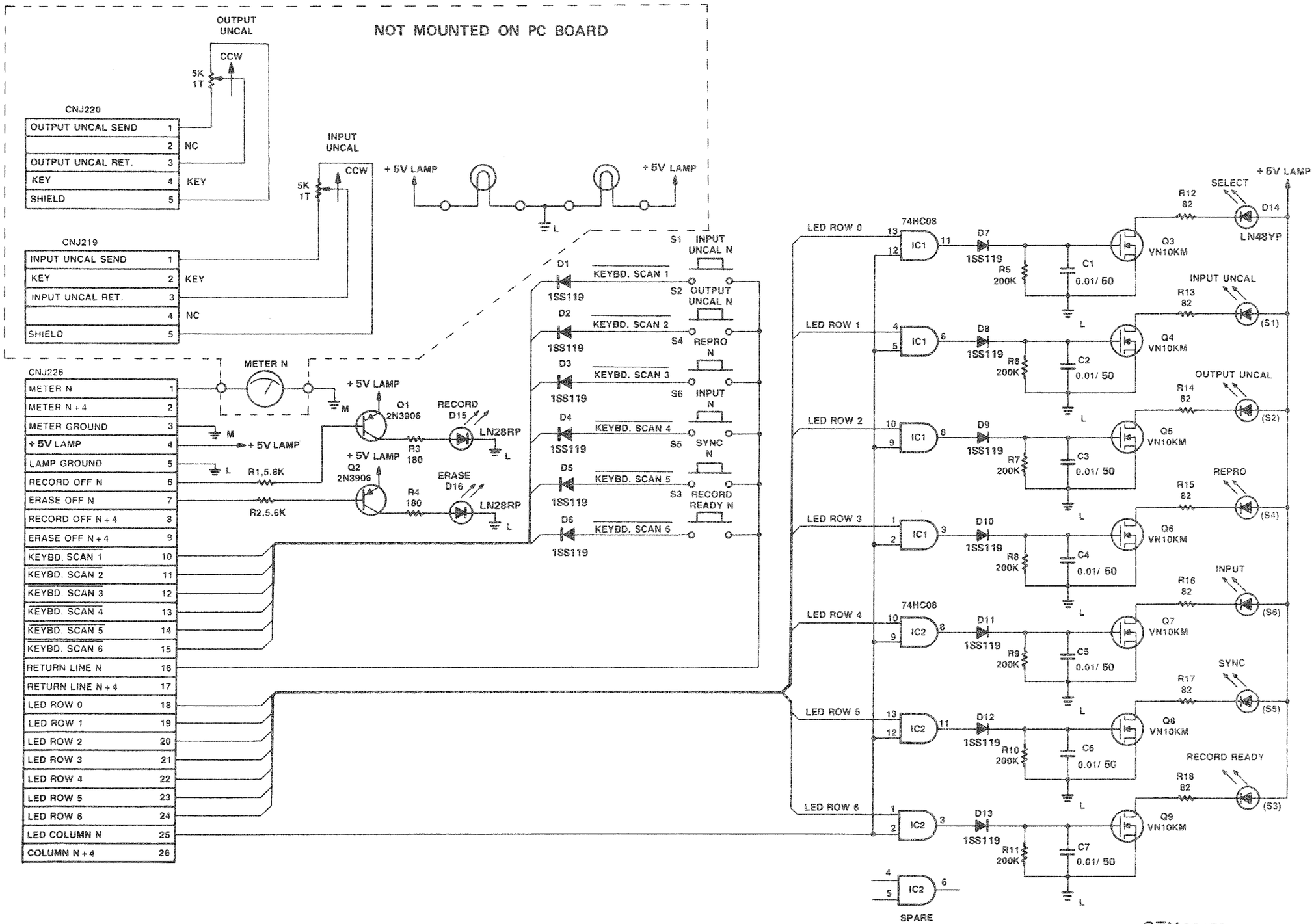

CTM BOARD
BOARD NO.1-619-165-12 & HIGHER
APR-5002/5003V

DSP BOARD (1-619-170-11)
Component Side

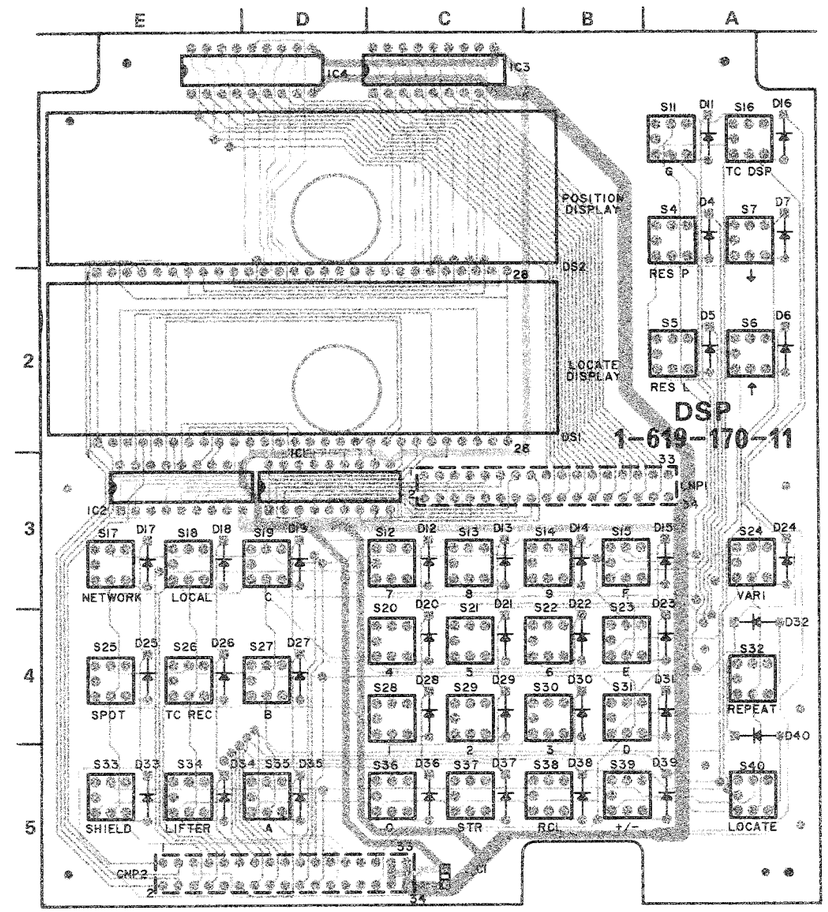

■ SOLDER SIDE PATTERN 1-619-170-11
※ COMPONENT SIDE PATTERN 1-619-170-11

DSP BOARD

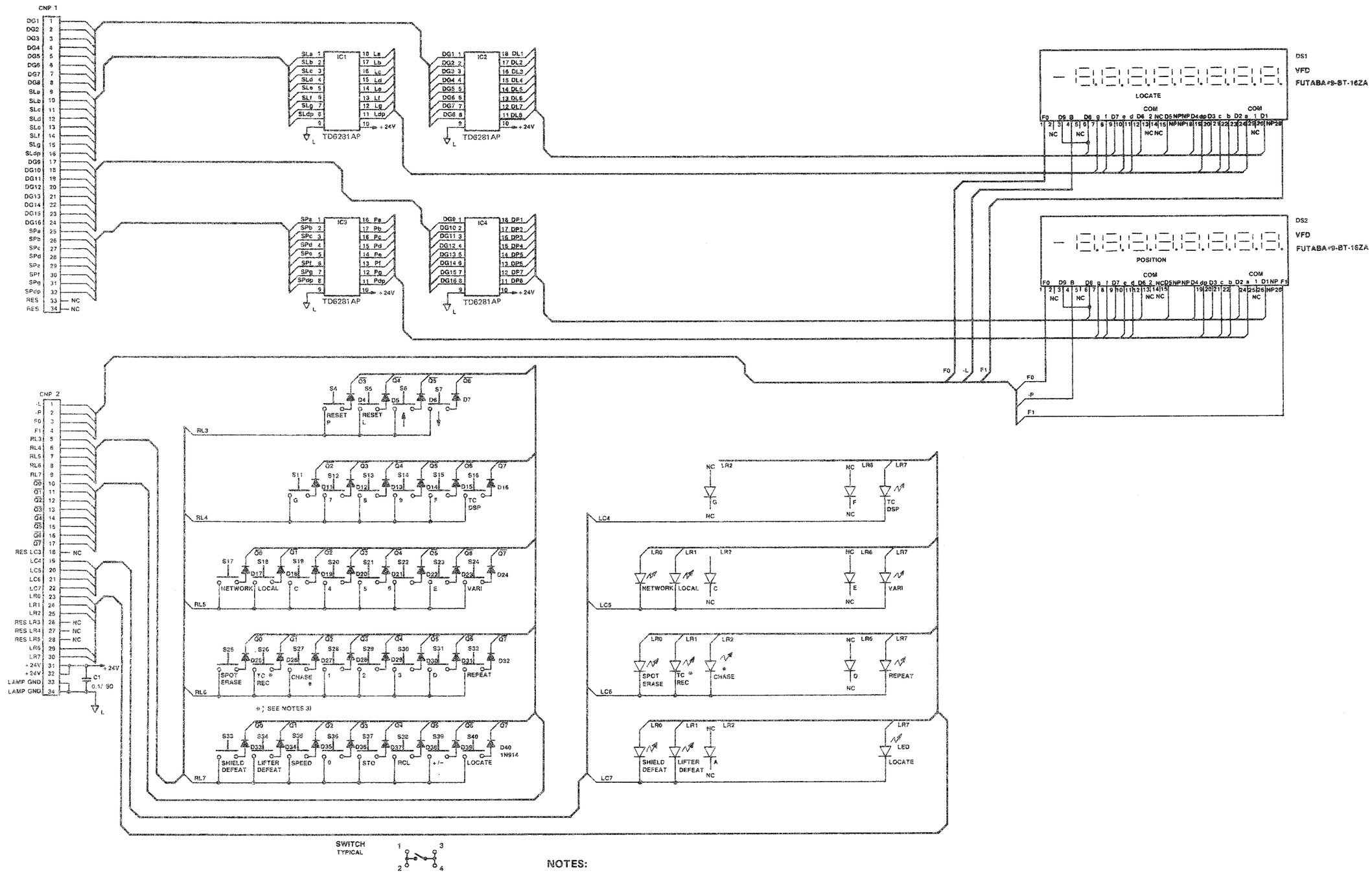

NOTES:

1) SWITCHES S11, S15, S19, S23 and S31 are not used.
2) DIODES D11, D15, D19, D23 and D31 are not used.
3) * S26, S27, D26 and D27 are installed in APR-5003, but not installed in APR-5002.

DSP BOARD
BOARD NO.1-619-170-11 & HIGHER
APR-5002/5003V

FEX BOARD (1-619-179-11)
Component Side

S/N; APR-5002 20001 TO 20300

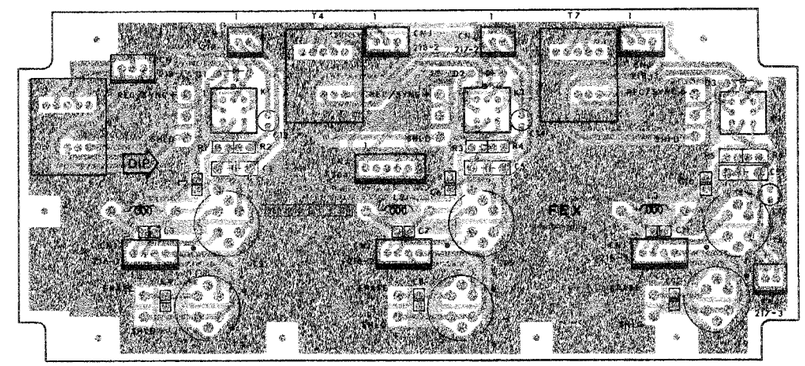

■ SOLDER SIDE PATTERN 1-619-179-11
▨ COMPONENT SIDE PATTERN 1-619-179-11

FEX BOARD (1-619-179-13)
Component Side

S/N; APR-5002 20301 AND HIGHER
S/N; APR-5003V 10001 AND HIGHER

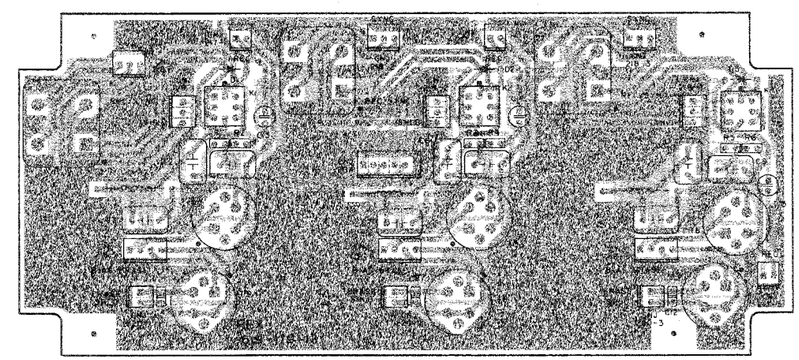

■ SOLDER SIDE PATTERN 1-619-179-13
▨ COMPONENT SIDE PATTERN 1-619-179-13

FEX BOARD

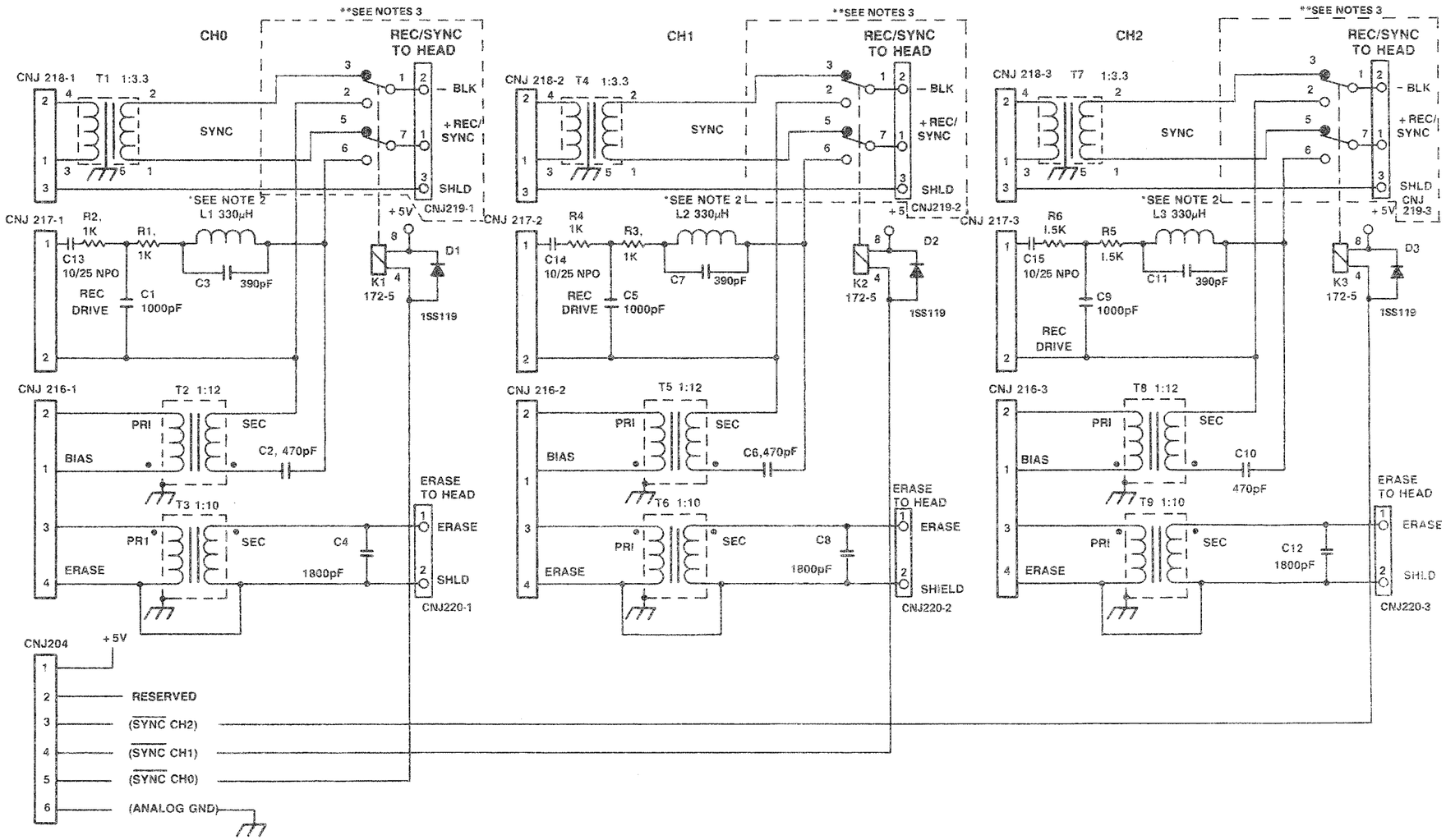

NOTES (UNLESS OTHERWISE SPECIFIED):

1. ALL RESISTOR VALUES ARE IN OHMS, 1/8 W,1%.
*2. L1, L2 & L3 ARE SHIELDED BY WRAPPING EACH INDUCTOR WITH μ METAL, THEN INCAPSULATE THE WRAPPED INDUCTOR IN SHRINK TUBING.

**3. The following circuit is only applicable to the FEX Board (Board No.1-619-179-11 and -12 only).

Serial Nos:

APR-5002 20001 TO 20300

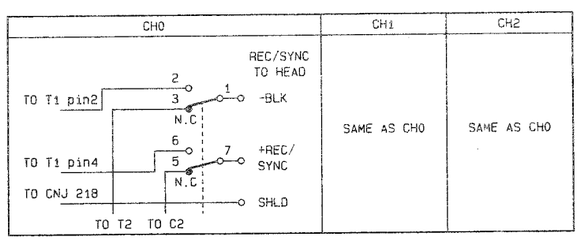

FEX / CNL, TCC	1-619-179-11 -12	1-619-179-13 and higher
1-619-158-11 -12	No Problem	Can't use
1-619-158-13 and higher	Add: JW4 Q9 (P1086) Delete: JW5	Add: JW5 Delete: Q9 and JW4

Applicable Serial NO. APR-5002	APR-5003	Parts that have been changed.	Pins that have been changed.	Parts that have been added.
20201 and higher	20401 and higher	C3, C7, C11 430pF → 390pF	———	———
20301 and higher	20501 and higher	R1, R2, R3, R4 1.5K → 1K	T1, T4, T7 8Pin → 4Pin 6Pin → 3Pin 4Pin → 1Pin GND → 5Pin	CNJ219 CNJ220

FEX BOARD
BOARD NO.1-619-179-11 & HIGHER
APR-5002/5003V

HES BOARD (1-619-180-11)
Component Side

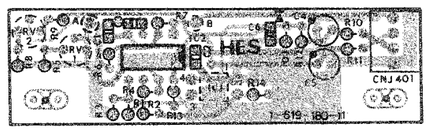

■ SOLDER SIDE PATTERN 1-619-180-11
▨ COMPONENT SIDE PATTERN 1-619-180-11

HES BOARD

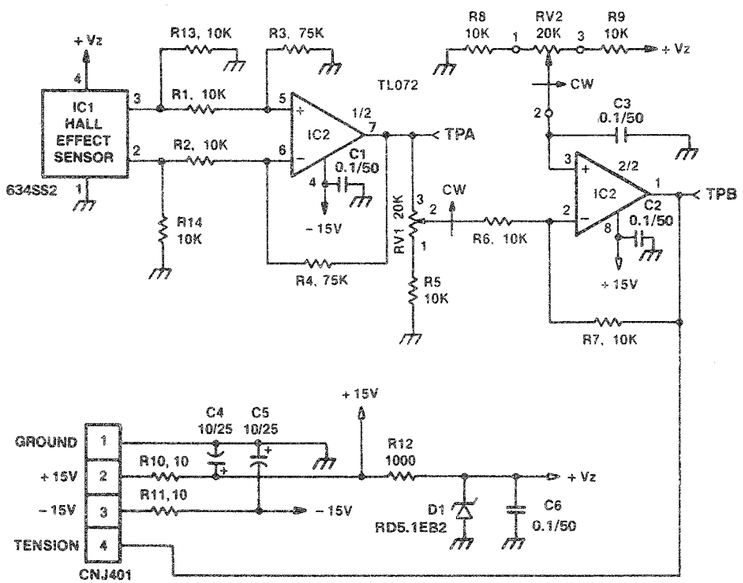

NOTES; UNLESS OTHERWISE SPECIFIED:

1. ALL RESISTOR VALUES ARE IN OHMS,1/6W,5%.
2. ALL CAPACITORS MEASURED IN MICROFARADS/VOLTS.
3. HALL EFFECT SENSOR IS 634SS2 OR EQUIVALENT.

KBD BOARD (1-619-181-11)
Component Side

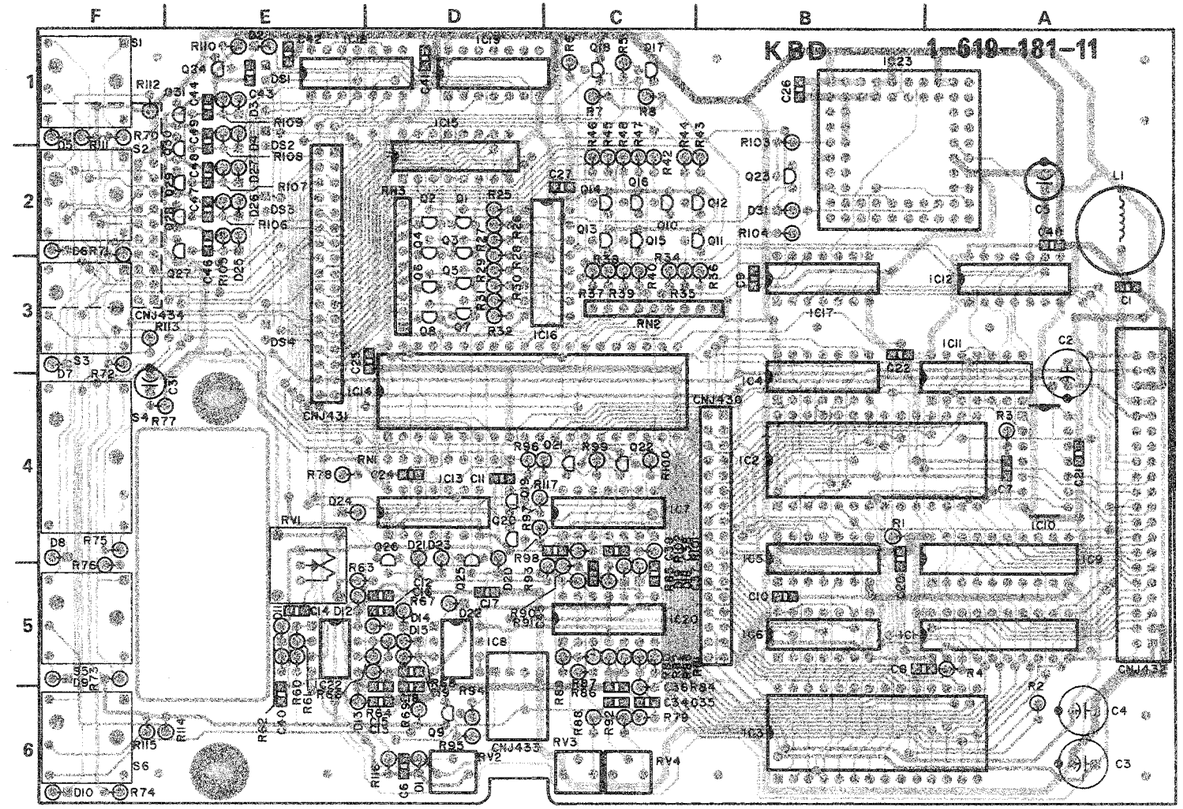

■ SOLDER SIDE PATTERN 1-619-181-11
▨ COMPONENT SIDE PATTERN 1-619-181-11

HES BOARD
BOARD NO.1-619-180-11 & HIGHER
APR-5002/5003V

KBD BOARD

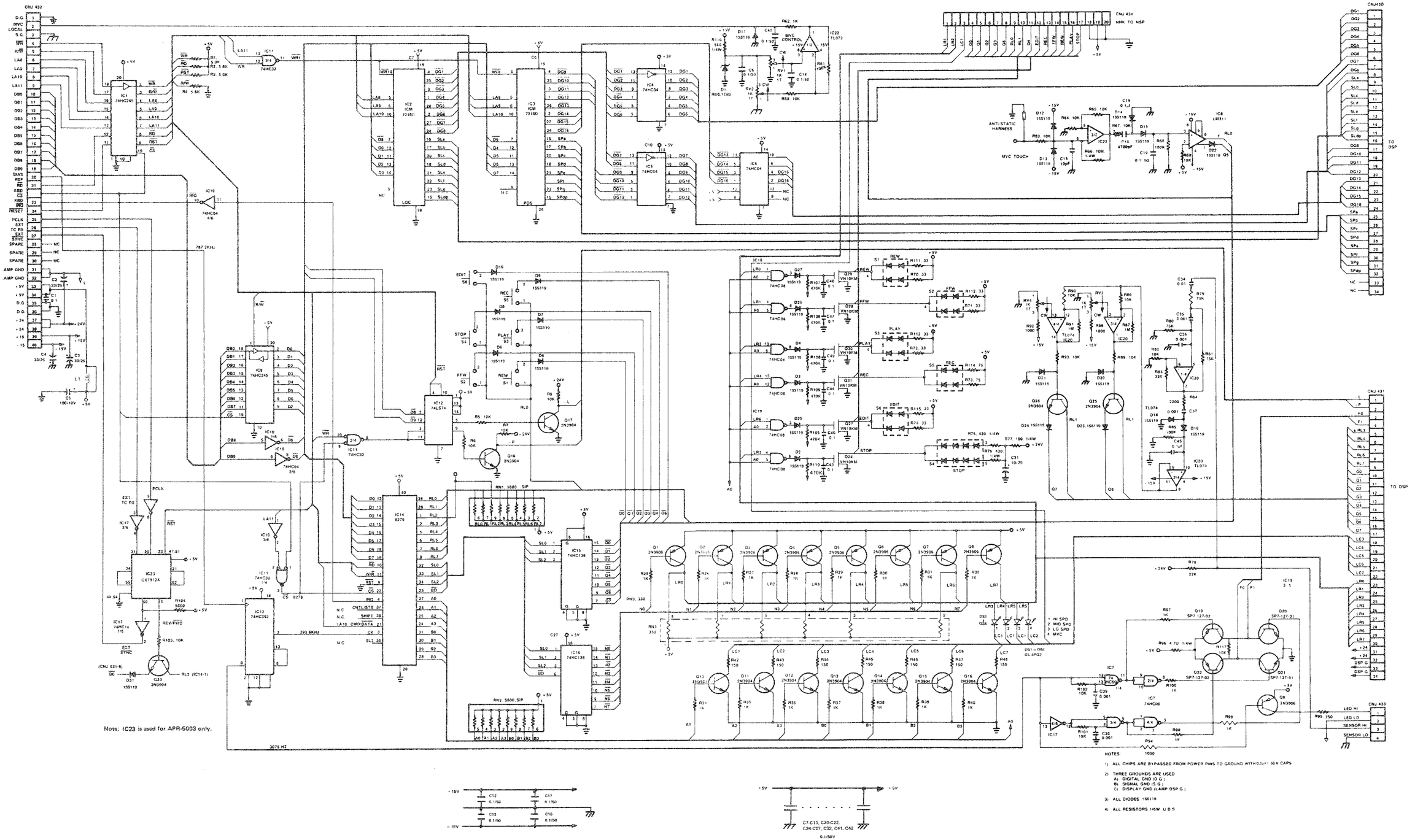

KBD BOARD
BOARD NO.1-619-181-11 & HIGHER
APR-5002/5003V

MSB BOARD (1-619-159-11)
Component Side

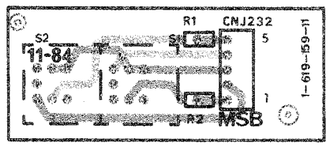

SOLDER SIDE PATTERN 1-619-159-11
COMPONENT SIDE PATTERN 1-619-159-11

MSB BOARD

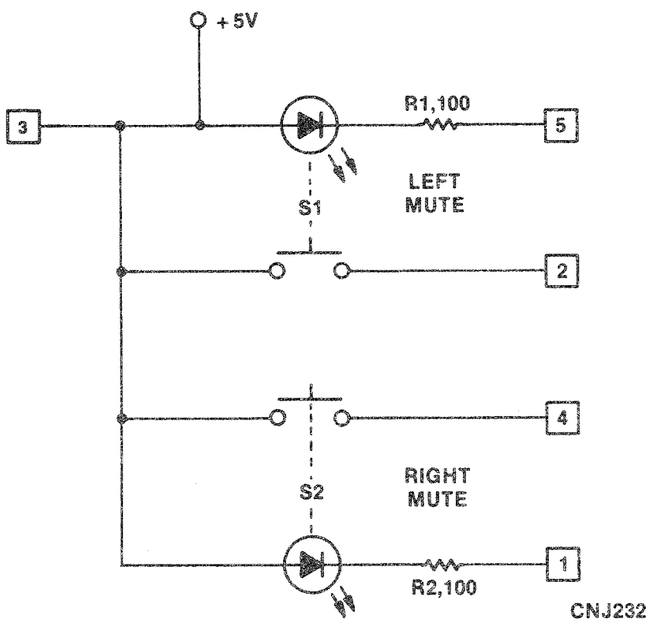

NOTES(UNLESS OTHERWISE SPECIFIED:
1. ALL RESISTOR VALUES ARE IN OHMS, 1/6W,5%

LNT BOARD (1-619-157-12)
Component Side

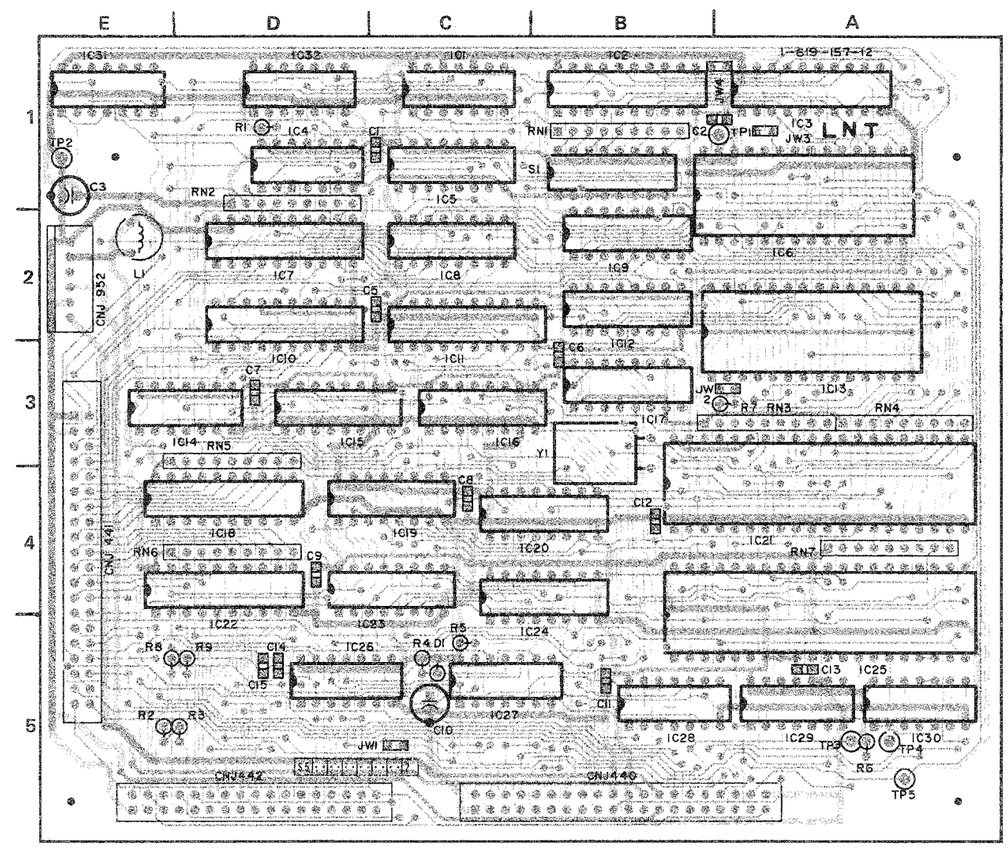

SOLDER SIDE PATTERN 1-619-157-12
COMPONENT SIDE PATTERN 1-619-157-12

MSB BOARD
BOARD NO.1-619-159-11 & HIGHER
APR-5002/5003V

LNT BOARD

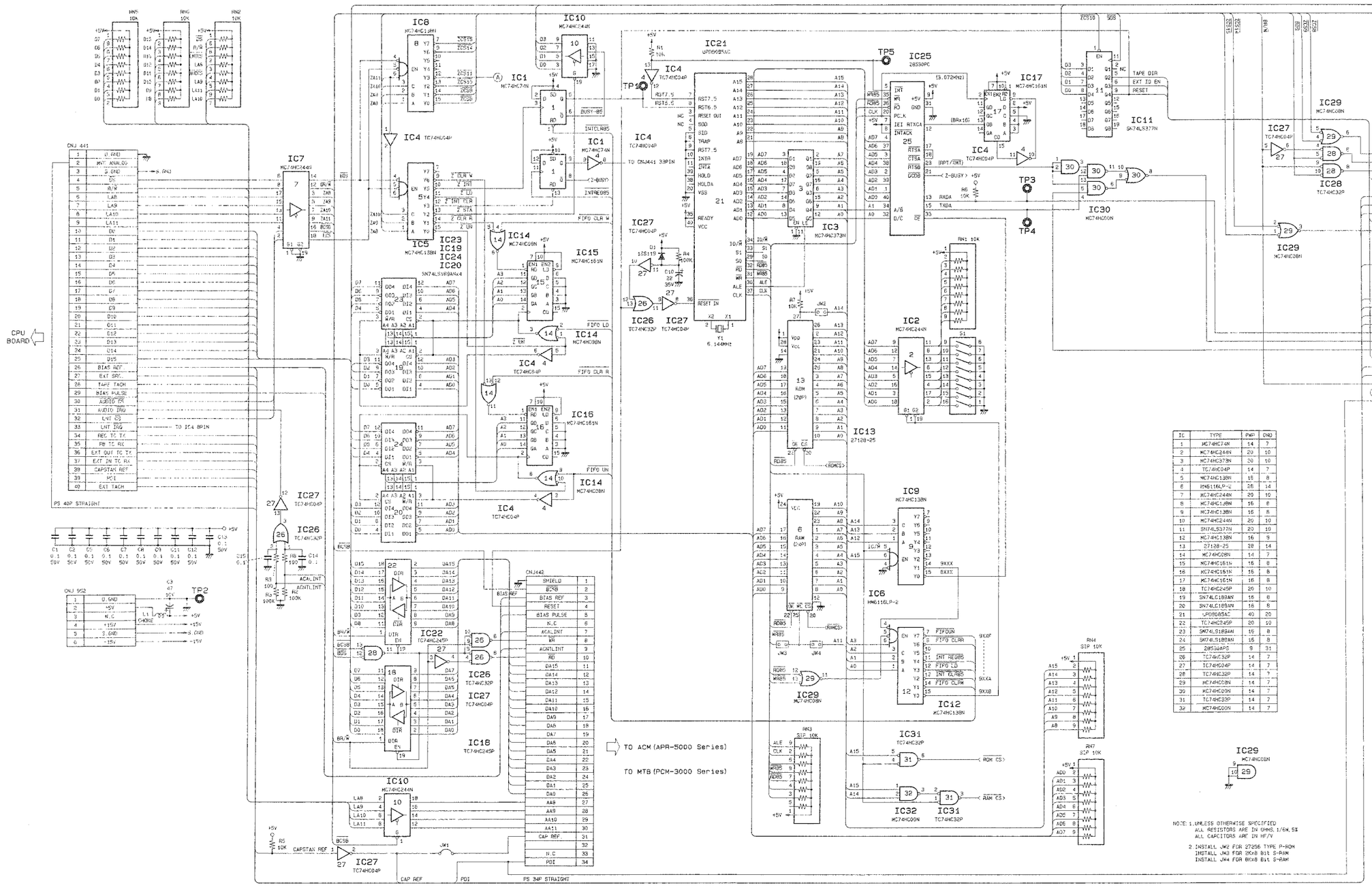

IC	TYPE	PWR	GND
1	MC74HC74N	14	7
2	MC74HC244N	20	10
3	MC74HC373N	20	10
4	TC74HC04P	14	7
5	MC74HC138N	16	8
6	HM6116LP-2	26	14
7	MC74HC244N	20	10
8	MC74HC138N	16	8
9	MC74HC138N	16	8
10	MC74HC244N	20	10
11	SN74LS377N	20	10
12	MC74HC138N	16	9
13	27128-25	28	14
14	MC74HC08N	14	7
15	MC74HC161N	16	8
16	MC74HC161N	16	8
17	MC74HC161N	16	8
18	TC74HC245P	20	10
19	SN74LS189AN	16	8
20	SN74LS189AN	16	8
21	μPD8085AC	40	20
22	TC74HC245P	20	10
23	SN74LS189AN	16	8
24	SN74LS189AN	16	8
25	Z8530APC	9	31
26	TC74HC32P	14	7
27	TC74HC04P	14	7
28	TC74HC32P	14	7
29	MC74HC08N	14	7
30	MC74HC00N	14	7
31	TC74HC32P	14	7
32	MC74HC00N	14	7

NOTE: 1. UNLESS OTHERWISE SPECIFIED
ALL RESISTORS ARE IN OHMS, 1/6W, 5%
ALL CAPCITORS ARE IN MF/V

2. INSTALL JW2 FOR 27256 TYPE P-ROM
INSTALL JW3 FOR 2Kx8 Bit S-RAM
INSTALL JW4 FOR 8Kx8 Bit S-RAM

LNT BOARD
BOARD NO.1-619-157-11 & HIGHER
APR-5002/5003V

MST BOARD (1-619-169-11) S/N; APR-5002 20001 TO 20615
Component Side

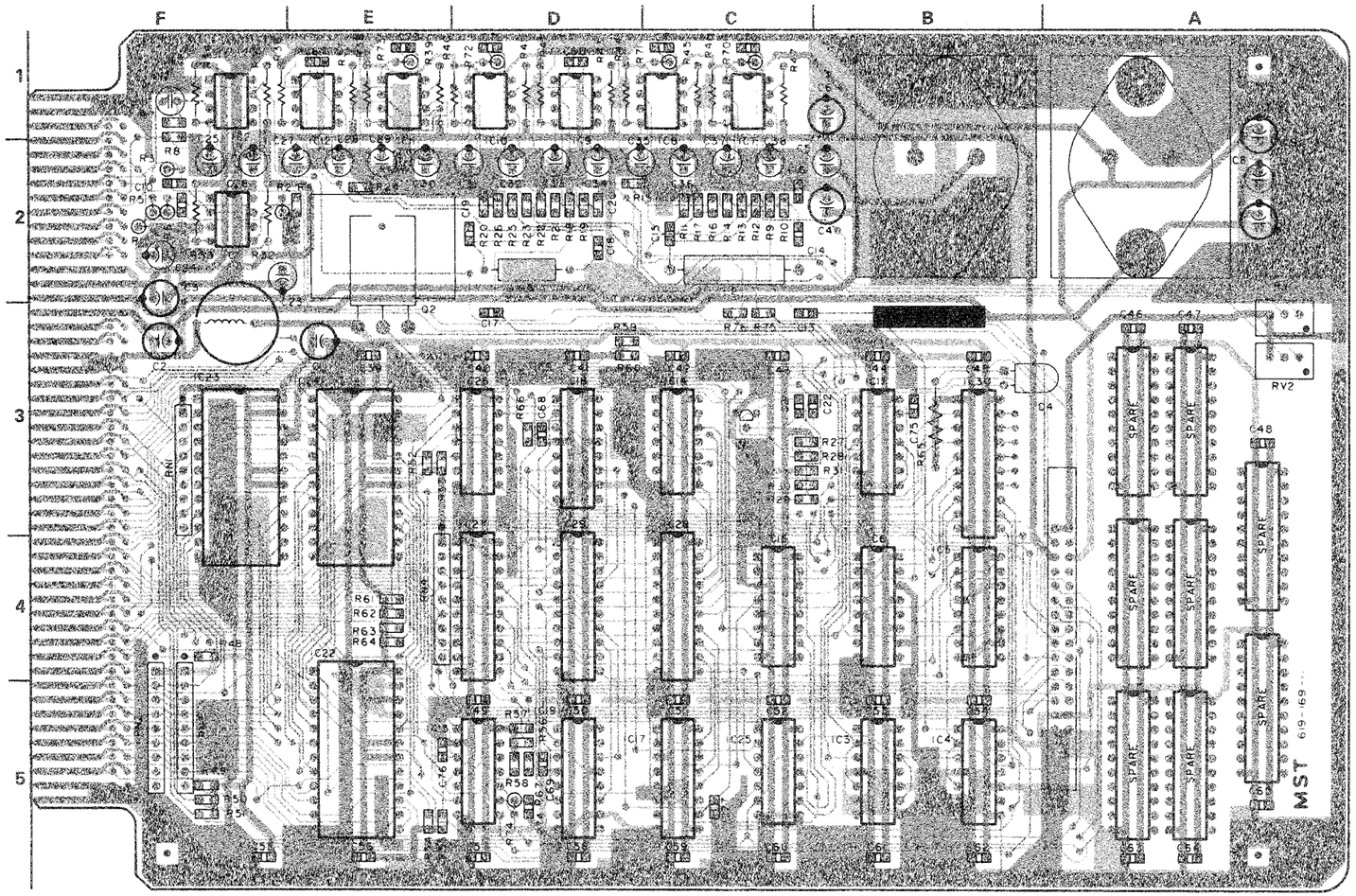

■ SOLDER SIDE PATTERN 1-619-169-11
■ COMPONENT SIDE PATTERN 1-619-169-11

MST BOARD (1-619-169-11) S/N; APR-5002 20001 TO 20615

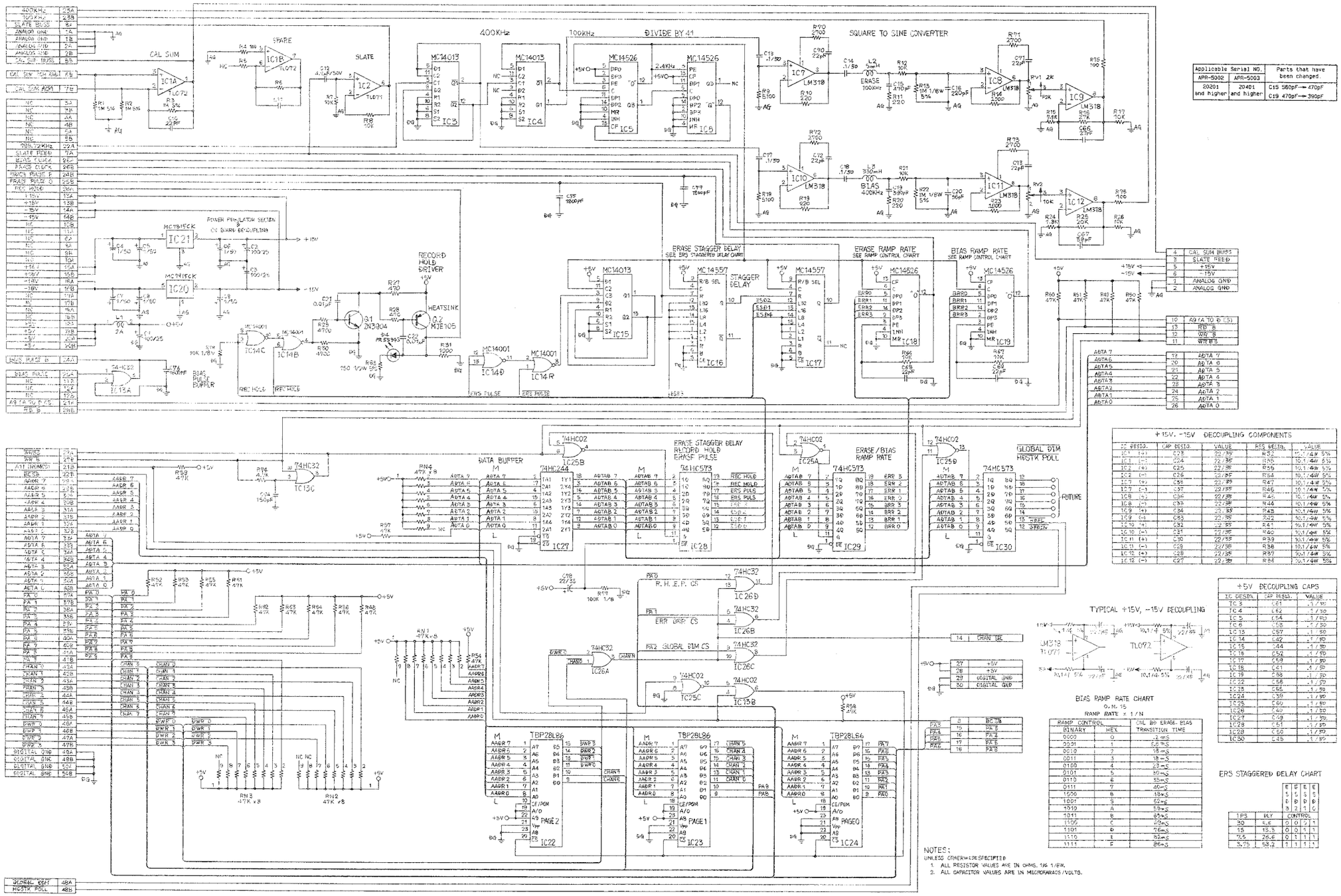

Applicable Serial NO.		Parts that have been changed.
APR-5002	APR-5003	
20201 and higher	20401 and higher	C15 560pF→470pF C19 470pF→390pF

NOTES:
UNLESS OTHERWISE SPECIFIED
1. ALL RESISTOR VALUES ARE IN OHMS, 1% 1/6W.
2. ALL CAPACITOR VALUES ARE IN MICROFARADS/VOLTS.

MST BOARD
BOARD NO.1-619-169-11
APR-5002

MST BOARD (1-619-169-13)
Component Side

S/N; APR-5002 20701 AND HIGHER
S/N; APR-5003V 10001 AND HIGHER

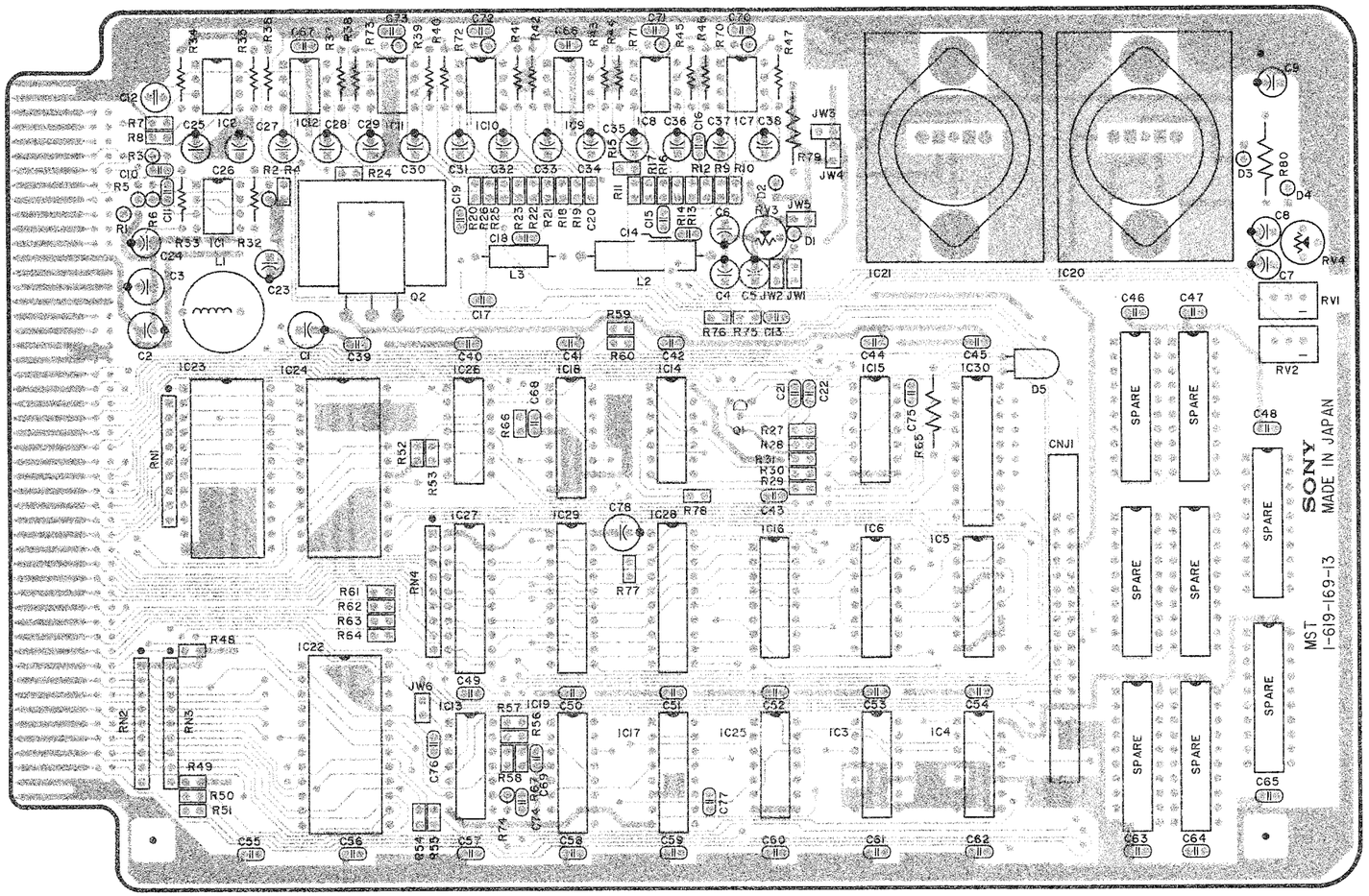

■ SOLDER SIDE PATTERN

MST BOARD (1-619-169-12 & HIGHER)

S/N; APR-5002 20701 AND HIGHER
S/N; APR-5003V 10001 AND HIGHER

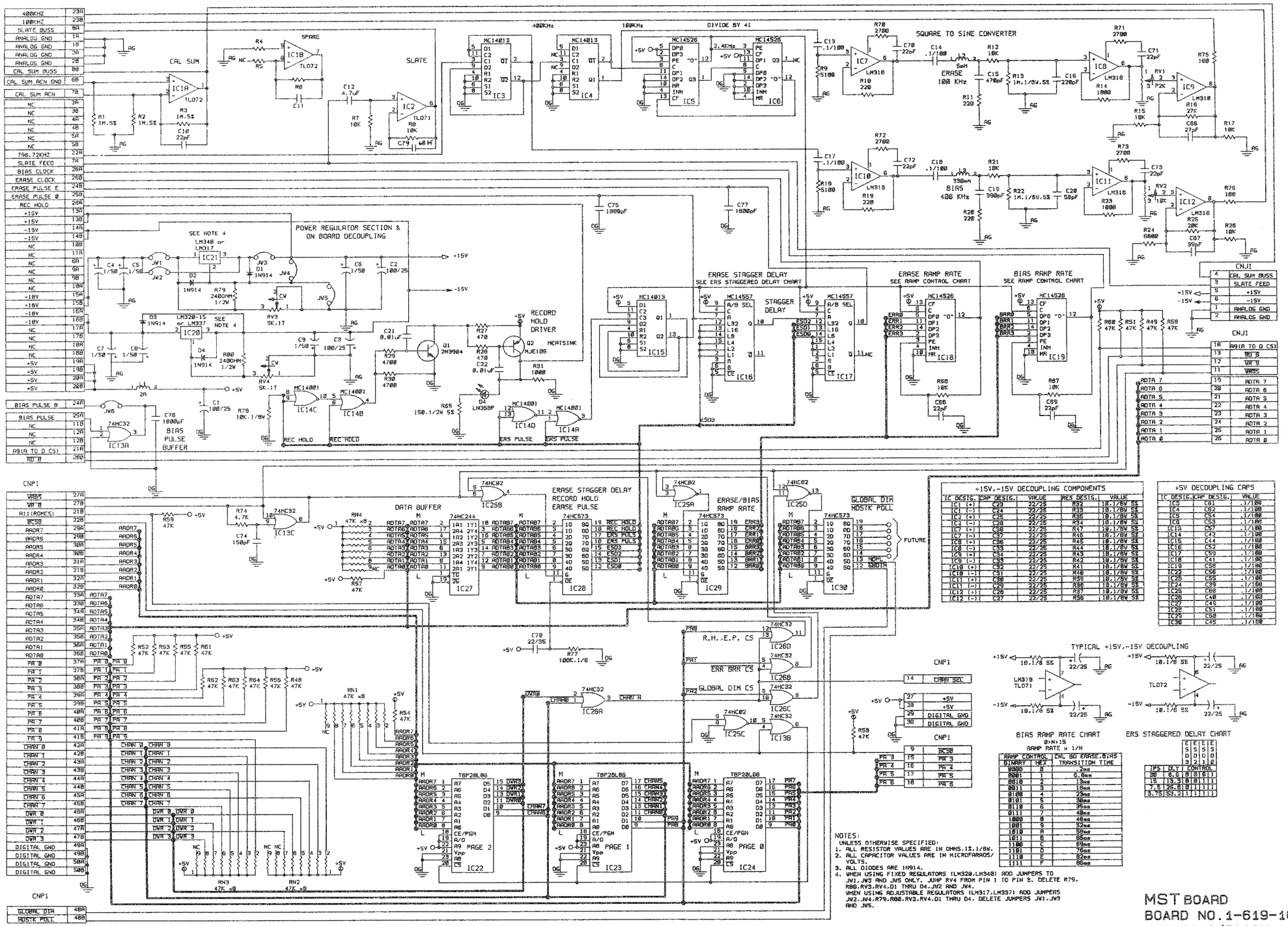

+15V,-15V DECOUPLING COMPONENTS				
IC DESIG.	CAP DESIG.	VALUE	RES DESIG.	VALUE
IC1 (+)	C23	22/25	R32	10.1/8W 5%
IC1 (-)	C24	22/25	R33	10.1/8W 5%
IC2 (+)	C25	22/25	R35	10.1/8W 5%
IC2 (-)	C26	22/25	R34	10.1/8W 5%
IC7 (+)	C38	22/25	R47	10.1/8W 5%
IC7 (-)	C37	22/25	R46	10.1/8W 5%
IC8 (+)	C36	22/25	R45	10.1/8W 5%
IC8 (-)	C35	22/25	R44	10.1/8W 5%
IC9 (+)	C34	22/25	R43	10.1/8W 5%
IC9 (-)	C33	22/25	R42	10.1/8W 5%
IC10 (+)	C32	22/25	R41	10.1/8W 5%
IC10 (-)	C31	22/25	R40	10.1/8W 5%
IC11 (+)	C30	22/25	R39	10.1/8W 5%
IC11 (-)	C29	22/25	R38	10.1/8W 5%
IC12 (+)	C28	22/25	R37	10.1/8W 5%
IC12 (-)	C27	22/25	R36	10.1/8W 5%

+5V DECOUPLING CAPS		
IC DESIG.	CAP DESIG.	VALUE
IC5	C61	.1/100
IC4	C62	.1/100
IC5	C54	.1/100
IC6	C53	.1/100
IC13	C57	.1/100
IC14	C42	.1/100
IC15	C44	.1/100
IC16	C52	.1/100
IC17	C50	.1/100
IC18	C41	.1/100
IC19	C58	.1/100
IC22	C56	.1/100
IC23	C55	.1/100
IC24	C39	.1/100
IC25	C60	.1/100
IC26	C40	.1/100
IC27	C46	.1/100
IC28	C51	.1/100
IC29	C59	.1/100
IC30	C45	.1/100

BIAS RAMP RATE CHART

0>N>15
RAMP RATE = 1/N

RAMP CONTROL		CNL SO ERASE.BIAS
BINARY	HEX	TRANSITION TIME
0000	0	.2ms
0001	1	6.8ms
0010	2	13ms
0011	3	18ms
0100	4	23ms
0101	5	30ms
0110	6	35ms
0111	7	40ms
1000	8	46ms
1001	9	52ms
1010	A	58ms
1011	B	65ms
1100	C	69ms
1101	D	76ms
1110	E	82ms
1111	F	86ms

ERS STAGGERED DELAY CHART

		E S 0	E S 1	E S 2	E S 3
IPS	OLY	CONTROL			
30	6.8	0	0	0	1
15	13.3	0	0	1	1
7.5	26.8	0	1	1	1
3.75	53.2	1	1	1	1

NOTES:
UNLESS OTHERWISE SPECIFIED:
1. ALL RESISTOR VALUES ARE IN OHMS.1%.1/8W.
2. ALL CAPACITOR VALUES ARE IN MICROFARADS/VOLTS.
3. ALL DIODES ARE 1N914.
4. WHEN USING FIXED REGULATORS (LM320.LM340) ADD JUMPERS TO JW1.JW3 AND JW5 ONLY. JUMP RV4 FROM PIN 1 TO PIN 3. DELETE R79. R80.RV3.RV4.D1 THRU D4.JW2 AND JW4.
WHEN USING ADJUSTABLE REGULATORS (LM317.LM337) ADD JUMPERS JW2.JW4.R79.R80.RV3.RV4.D1 THRU D4. DELETE JUMPERS JW1.JW3 AND JW5.

MST BOARD
BOARD NO.1-619-169-12 & HIGHER
APR-5002/5003V

RMD BOARD (1-619-160-11)
Component Side

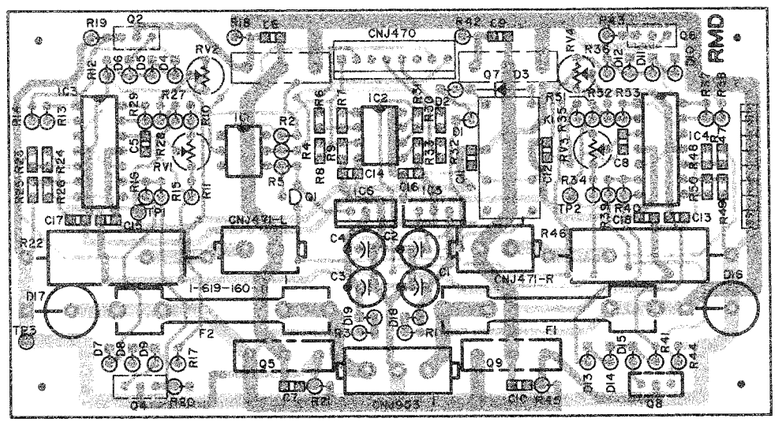

SOLDER SIDE PATTERN 1-619-160-11
COMPONENT SIDE PATTERN 1-619-160-11

RMD BOARD

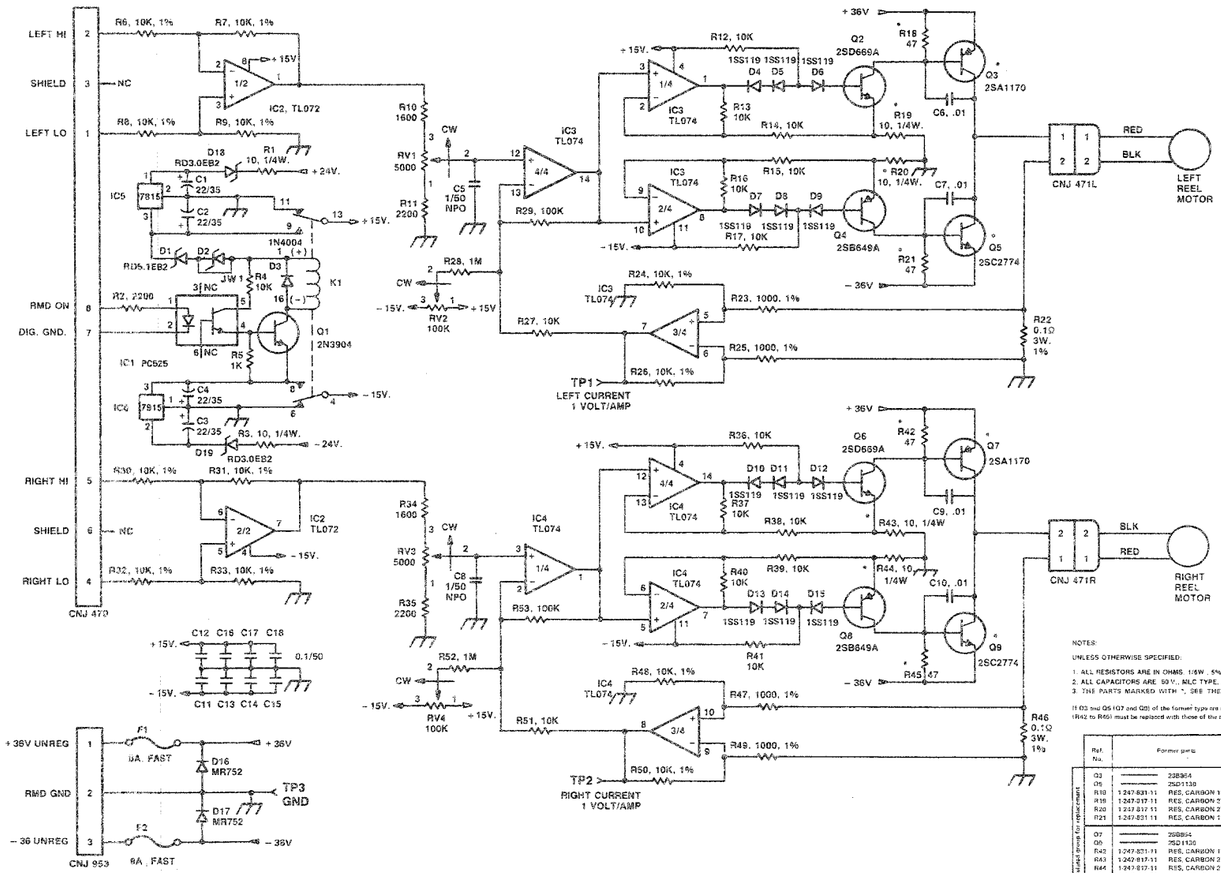

NOTES:

UNLESS OTHERWISE SPECIFIED:

1. ALL RESISTORS ARE IN OHMS, 1/6W, 5%.
2. ALL CAPACITORS ARE 50V., MLC TYPE.
3. THE PARTS MARKED WITH *, SEE THE FOLLOWING TABLE.

If Q3 and Q5 (Q7 and Q9) of the former type are replaced with those of the new type, R19 to R21 (R42 to R45) must be replaced with those of the new type at the same time.

	Ref. No.	Former parts		New parts	
Replace these for new parts	Q3	———	2SB854	8-729-350-24	2SA1170
	Q5	———	2SD1138	8-729-300-19	2SC2774
	R19	1-247-831-11	RES, CARBON 1K	1-249-401-11	RES, CARBON 47
	R20	1-247-817-11	RES, CARBON 270	1-247-825-11	RES, CARBON 10
	R21	1-247-831-11	RES, CARBON 1K	1-249-401-11	RES, CARBON 47
Replace these for new parts	Q7	———	2SB854	8-729-350-24	2SA1170
	Q9	———	2SD1138	8-729-300-19	2SC2774
	R42	1-247-831-11	RES, CARBON 1K	1-249-401-11	RES, CARBON 47
	R43	1-247-817-11	RES, CARBON 270	1-247-825-11	RES, CARBON 10
	R44	1-247-817-11	RES, CARBON 270	1-247-825-11	RES, CARBON 10
	R45	1-247-831-11	RES, CARBON 1K	1-249-401-11	RES, CARBON 47

RMD BOARD
BOARD NO.1-619-160-11 & HIGHER
APR-5002/5003V

RTS BOARD (1-619-176-11)
Component Side

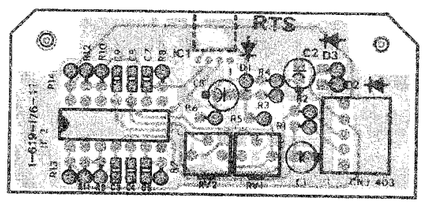

SOLDER SIDE PATTERN 1-619-176-11
COMPONENT SIDE PATTERN 1-619-176-11

SBR BOARD (1-620-303-11)
Component Side

S/N; APR-5002 20001 TO 20700 ONLY

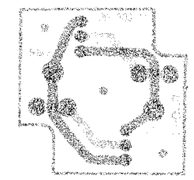

SOLDER SIDE PATTERN 1-620-303-11
COMPONENT SIDE PATTERN 1-620-303-11

RTS BOARD

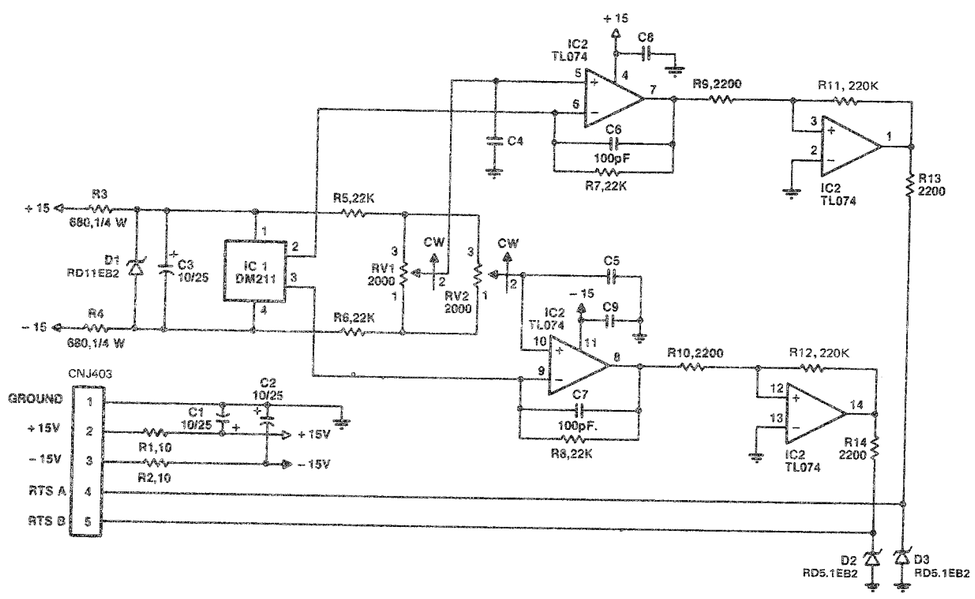

NOTES; UNLESS OTHERWISE SPECIFIED:
1. ALL RESISTORS ARE IN OHMS, 1/6W, 5%.
2. ALL CAPACITORS ARE 0.1μF, 50 V. CERAMIC.
3. C4, C5 ARE NOT INSTALLED.

SBR BOARD

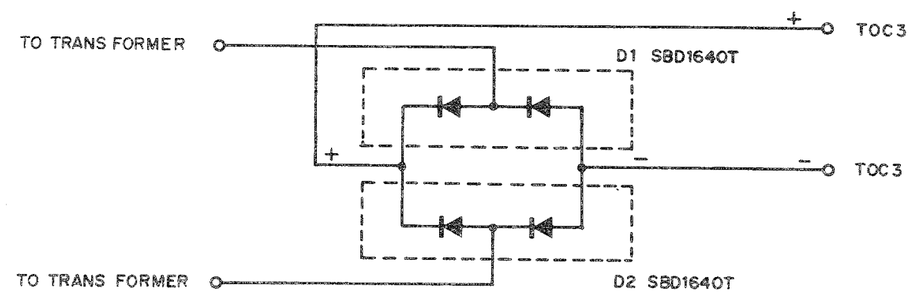

RTS BOARD
BOARD NO. 1-619-176-11 & HIGHER
APR-5002/5003V

SBR BOARD
BOARD NO. 1-620-303-11
APR-5002

TCC BOARD (1-619-158-11) S/N: APR-5002 20001 TO 20300
Component Side

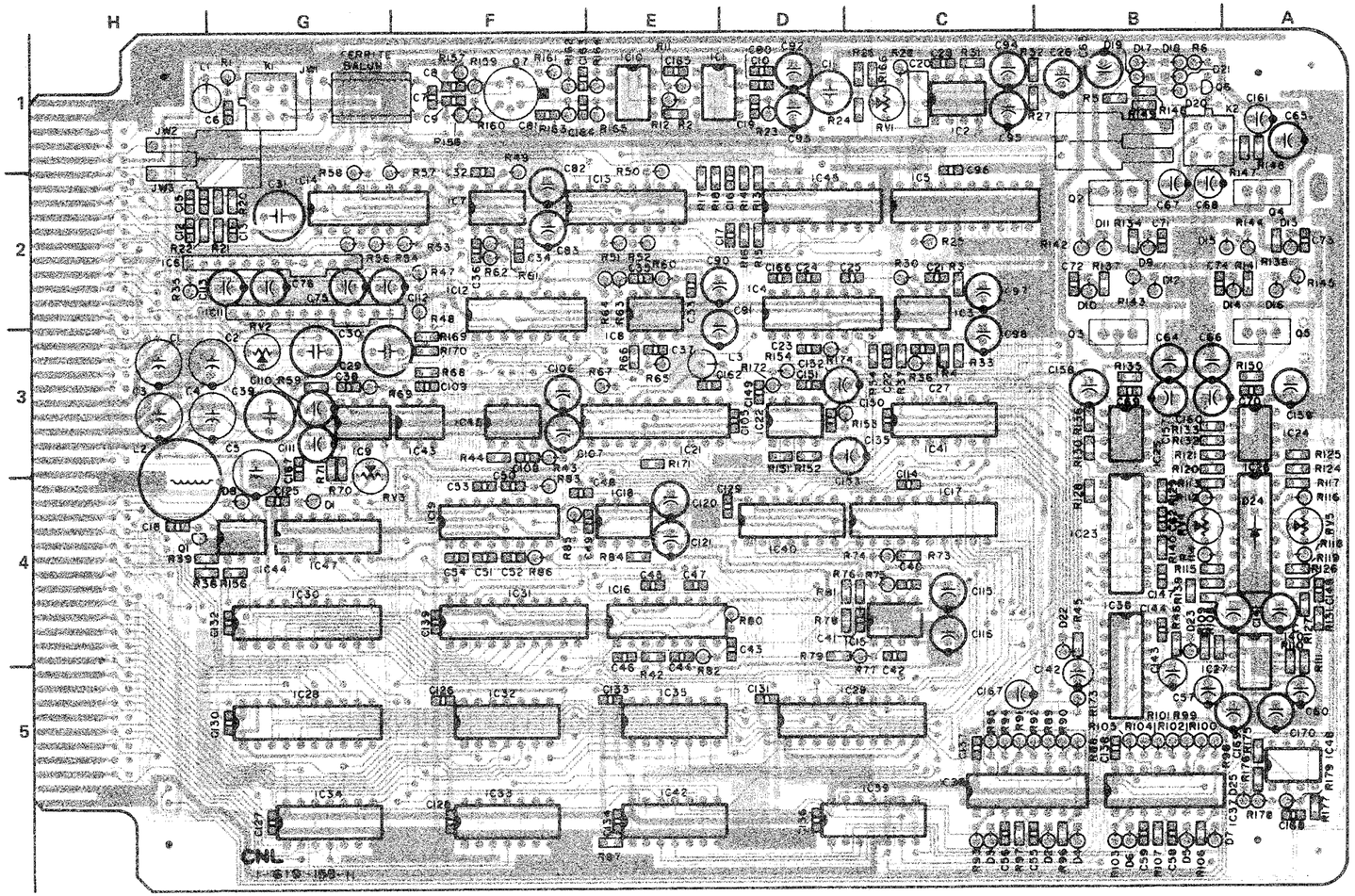

■ SOLDER SIDE PATTERN 1-619-158-11
■ COMPONENT SIDE PATTERN 1-619-158-11

TCC BOARD (1-619-158-13)
Component Side

S/N; APR-5002 20301 AND HIGHER
S/N; APR-5003V 10001 AND HIGHER

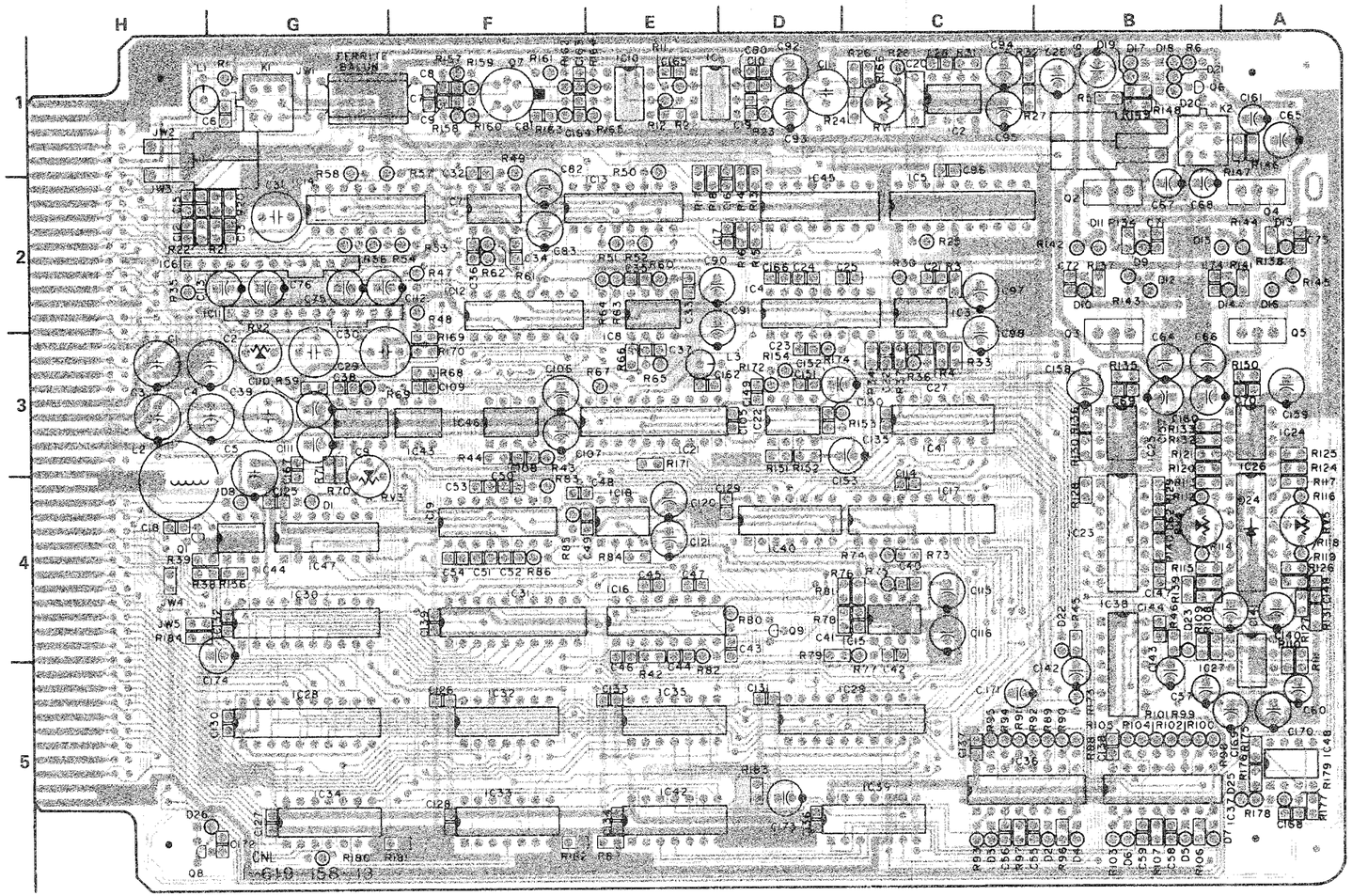

■ SOLDER SIDE PATTERN 1-619-158-13
■ COMPONENT SIDE PATTERN 1-619-158-13

TCC BOARD

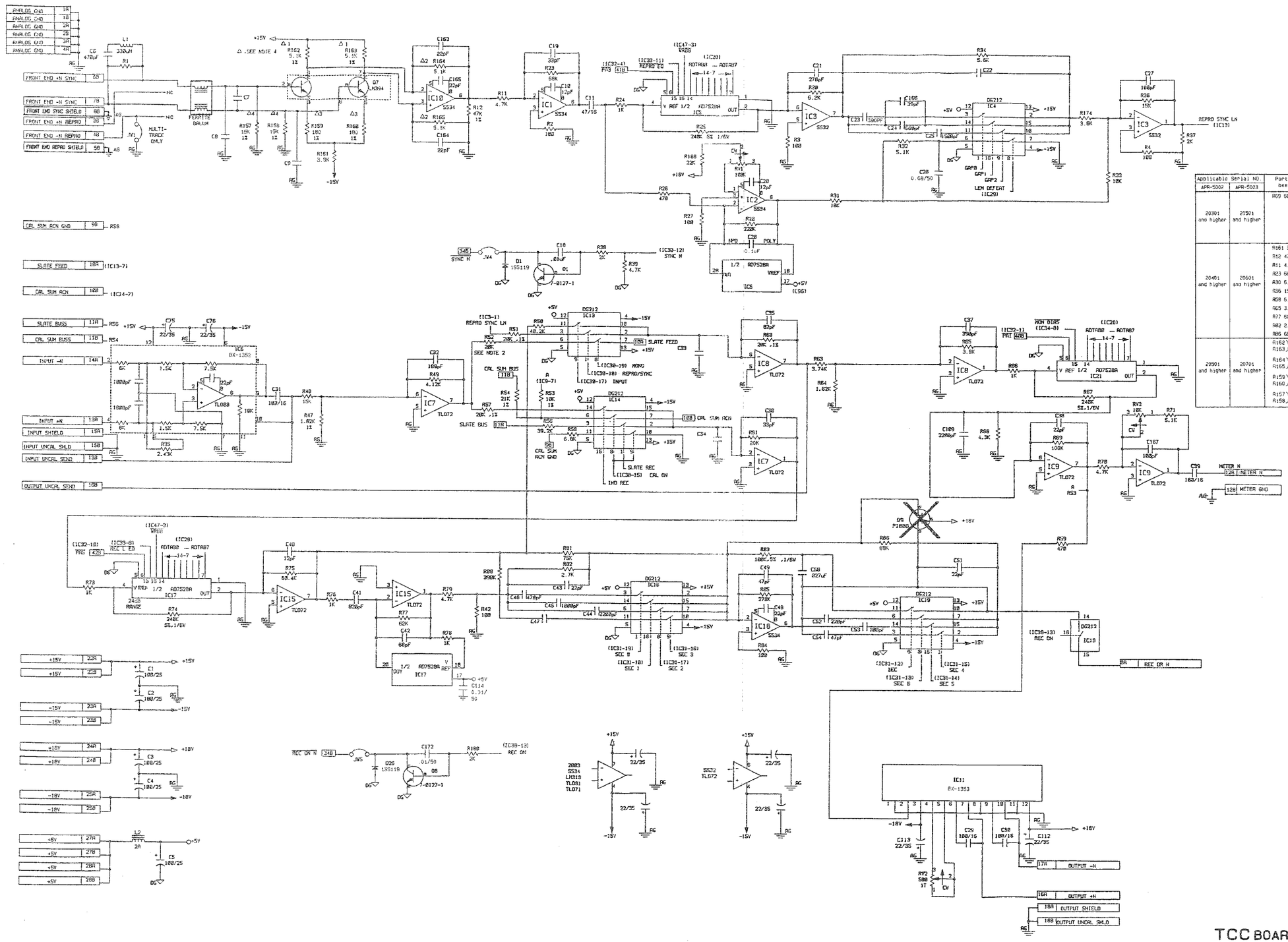

Applicable Serial NO. APR-5002	Applicable Serial NO. APR-5003	Parts that have been changed.	Parts that have been added.	Parts that have been deleted.
20301 and higher	20501 and higher	R09 50.4K → 100K	JW4 JW5 D26 1N914 C172 .01/100 Q8 7-0127-1 R180 2K	D9 P1086
20401 and higher	20601 and higher	R161 3.92k → 3.9K R12 47.5k → 47K R11 4.75K → 4.7K R23 68.5K → 68K R30 6.19K → 6.2K R36 15.4K → 15K R58 6.49K → 6.8K R65 3.83K → 3.9K R77 60.4K → 62K R82 2.74K → 2.7K R86 68.1K → 68K	———	———
20501 and higher	20701 and higher	R162, R163 } 5.11K → 5.1K R164, R165 } 5.11K → 5.1K R159, R160 } 182 → 180 R157, R158 } 14K → 15K	———	———

TCC BOARD
BOARD NO.1-619-158-11 & HIGHER
APR-5002/5003V

TCC BOARD

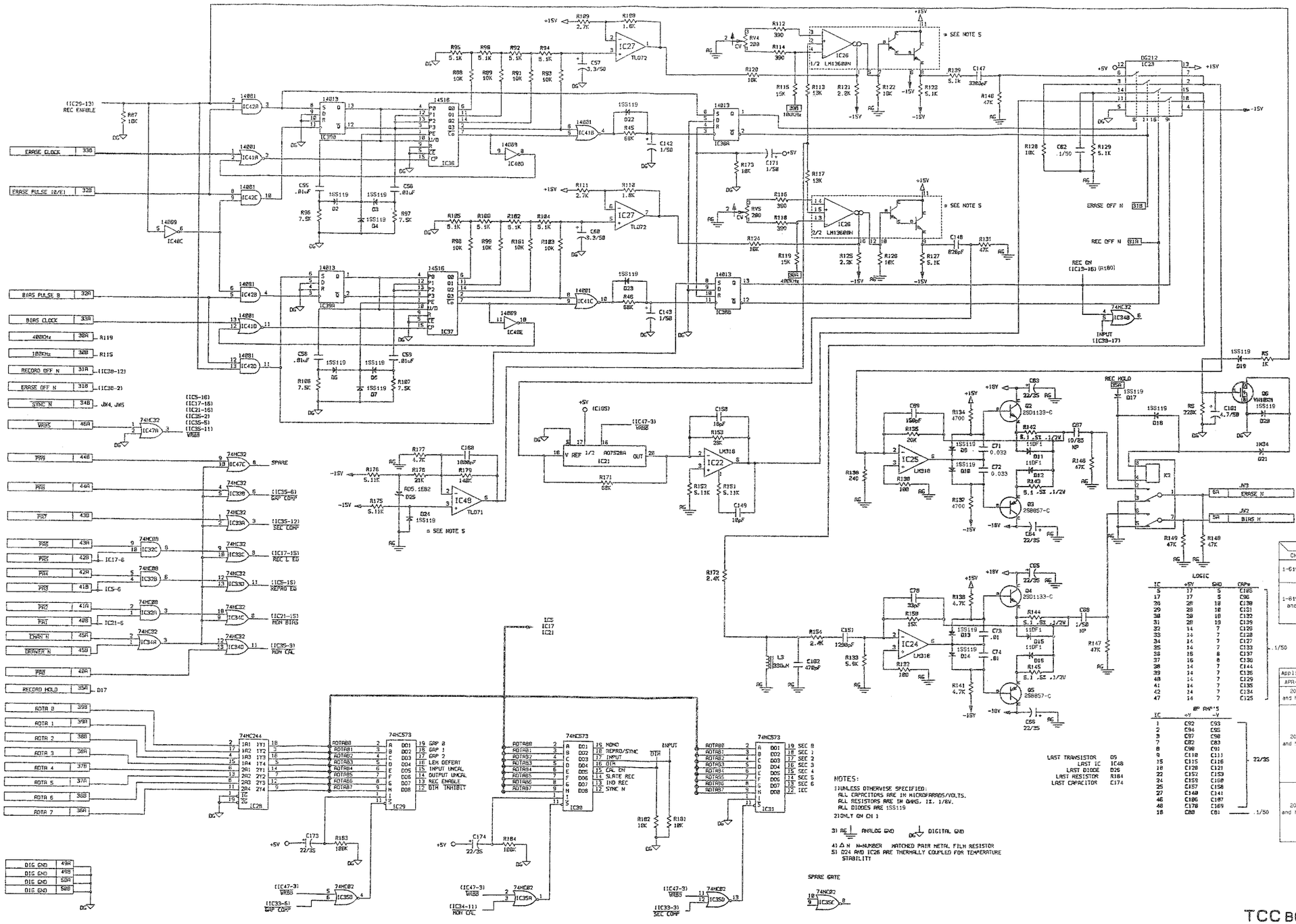

PEX CNL, TCC	1-619-179-11 -12	1-619-179-13 and higher
1-619-158-11 -12	No Problem	Can't use
1-619-158-13 and higher	Add: JW4 Q9(P1086) Delete: JW5	Add: JW4 JW5 Delete: Q9 and JW4

LOGIC

IC	+5V	GND	CAPs
5	17	5	C185
17	17	5	C96
28	28	18	C138
29	29	18	C131
30	30	18	C192
31	28	19	C139
32	14	7	C126
33	14	7	C128
34	14	7	C127
35	14	7	C133
36	16	8	C137
37	16	8	C136
38	14	7	C144
39	14	7	C135
40	14	7	C129
41	14	7	C135
42	14	7	C134
47	14	7	C125

.1/50

BP RAD'S

IC	+V	-V
1	C92	C93
2	C94	C95
3	C97	C98
7	C82	C83
8	C98	C91
9	C118	C111
15	C115	C116
16	C120	C121
22	C152	C153
24	C159	C160
25	C157	C158
27	C140	C141
46	C186	C187
48	C178	C169
18	C88	C81

22/35

.1/50

LAST TRANSISTOR Q9
LAST IC IC48
LAST DIODE D29
LAST RESISTOR R184
LAST CAPACITOR C174

NOTES:
1)UNLESS OTHERWISE SPECIFIED:
ALL CAPACITORS ARE IN MICROFARADS/VOLTS.
ALL RESISTORS ARE IN OHMS, 1%, 1/8W.
ALL DIODES ARE 1SS119
2)ONLY ON CH 1
3) AG ANALOG GND DG DIGITAL GND
4) A N N-NUMBER MATCHED PAIR METAL FILM RESISTOR
5) D24 AND IC26 ARE THERMALLY COUPLED FOR TEMPERATURE STABILITY

Applicable Serial NO. APR-5002	APR-5003	Pins that have been soldered.	Parts that have been changed.
20301 and higher	20501 and higher	D1 → JW4, JW5	———
20401 and higher	20601 and higher	———	R90, R92, R94, R95, R100, R102, R104, R105 5.11K → 5.1K R88, R89, R91, R93, R98, R99, R101, R103 10.2K → 10K R112, R114, R116, R118 A02 → 390 R154, R172 2.55K → 2.4K
20701 and higher	20901 and higher	———	R115, 119 10K → 15K Q2, 4 D4C9 → 2SD1133-C Q3, 5 D4C9 → 2SB857-C D11, 12, 15, 16 UC51102 → 110F1

TCC BOARD
BOARD NO.1-619-158-11 & HIGHER
APR-5002/5003V

TCM BOARD (1-619-165-12) APR-5003V ONLY
Component Side

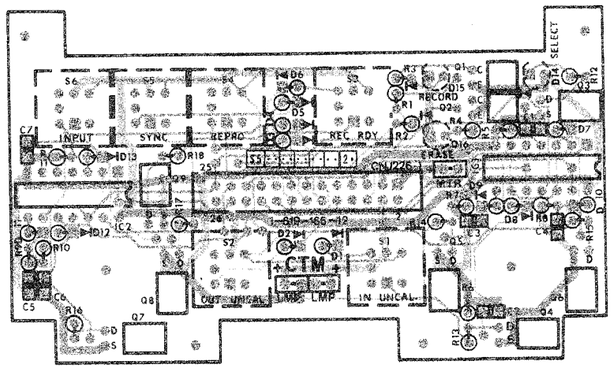

■ SOLDER SIDE PATTERN 1-619-165-12
■ COMPONENT SIDE PATTERN 1-619-165-12

TCM BOARD

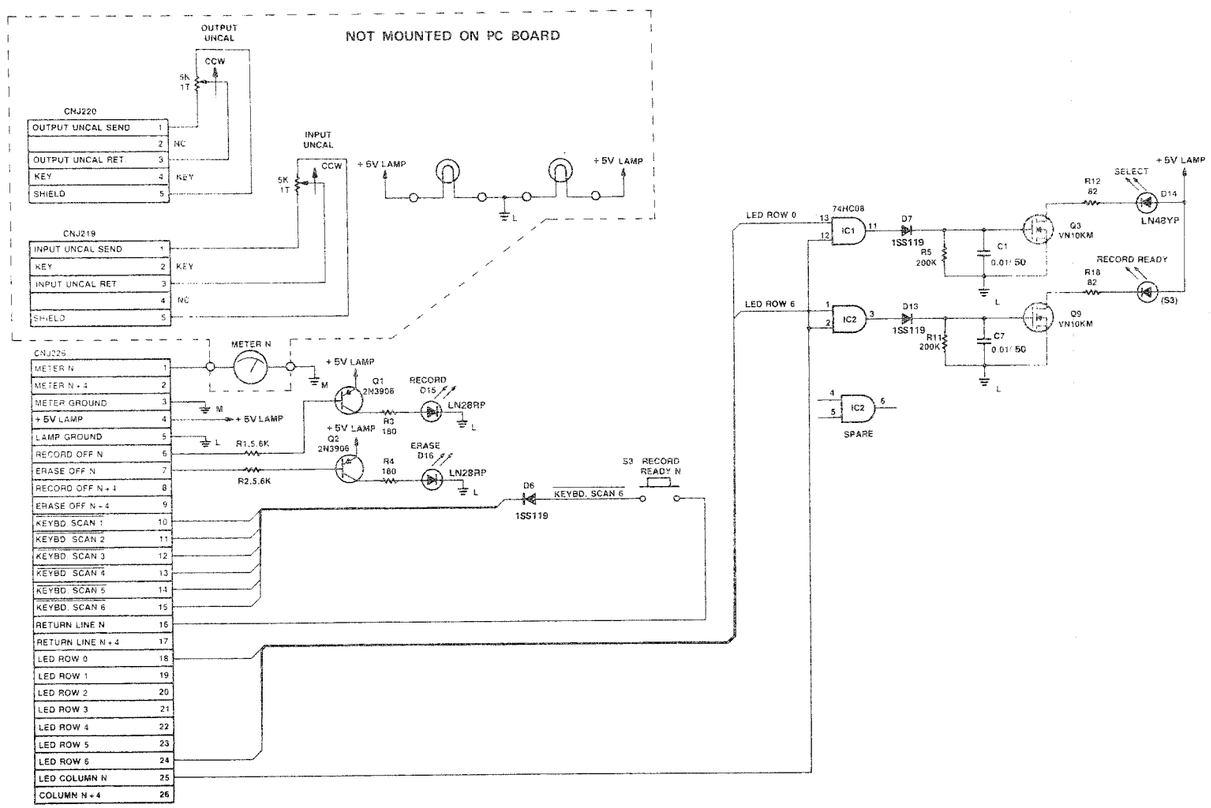

TCM BOARD
BOARD NO.1-619-165-12 & HIGHER
APR-5003V ONLY

TIB BOARD (1-619-177-11)
Component Side

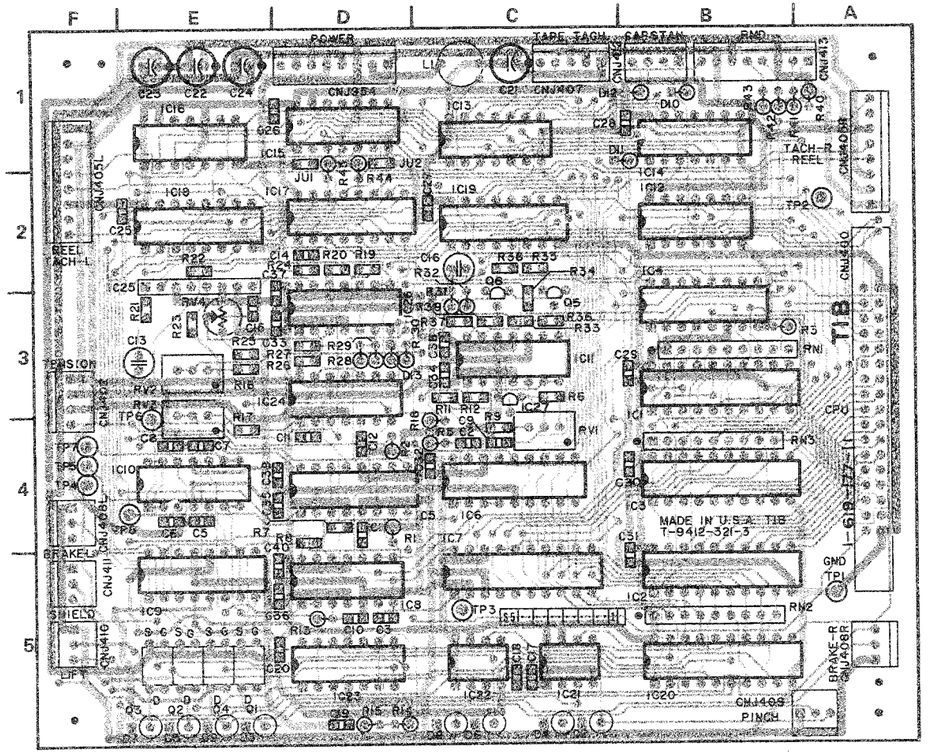

■ SOLDER SIDE PATTERN 1-619-177-11
■ COMPONENT SIDE PATTERN 1-619-177-11

TIB BOARD

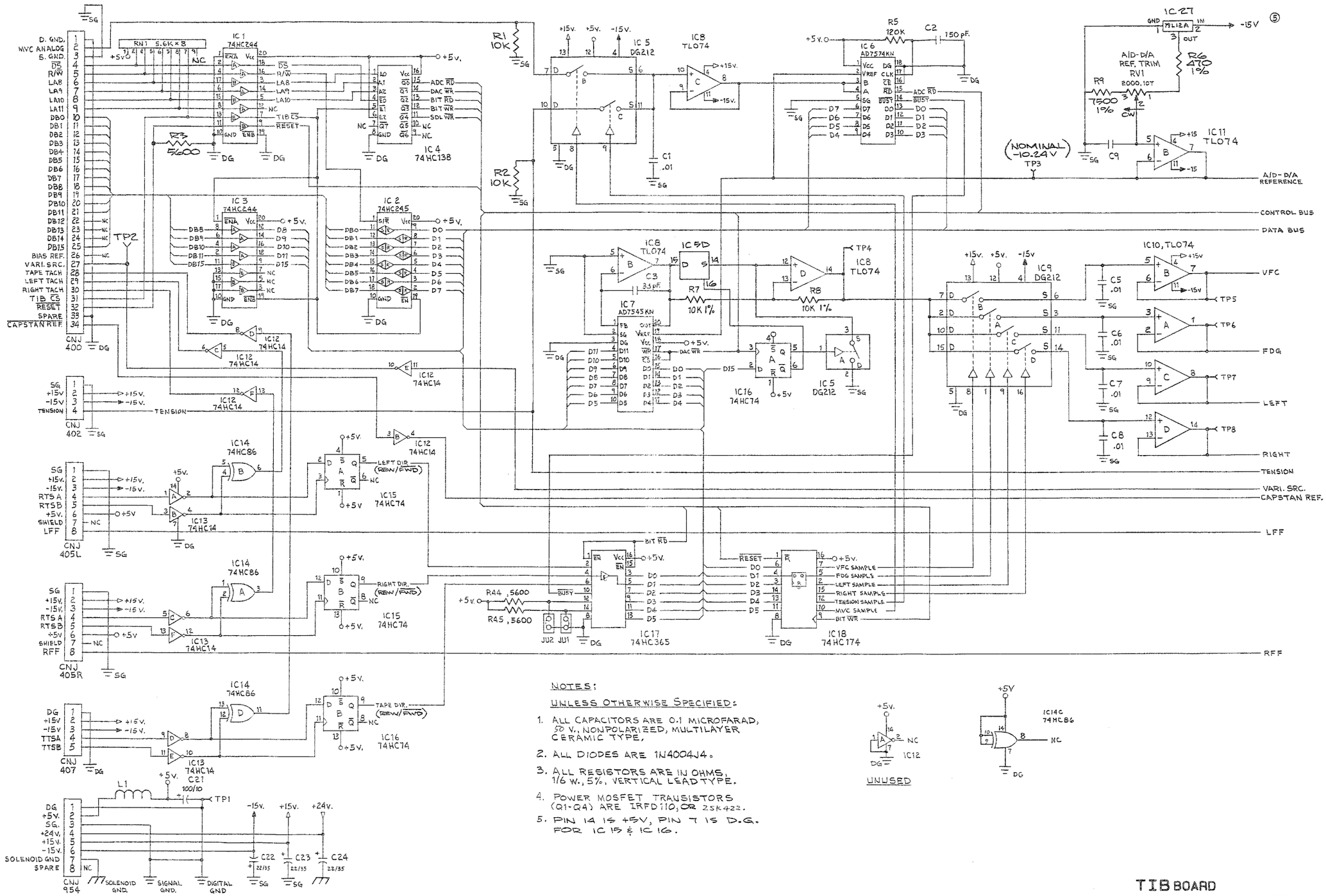

NOTES:

UNLESS OTHERWISE SPECIFIED:

1. ALL CAPACITORS ARE 0.1 MICROFARAD, 50 V., NONPOLARIZED, MULTILAYER CERAMIC TYPE.
2. ALL DIODES ARE 1N4004J4.
3. ALL RESISTORS ARE IN OHMS, 1/6 W., 5%, VERTICAL LEAD TYPE.
4. POWER MOSFET TRANSISTORS (Q1-Q4) ARE IRFD110, OR 2SK422.
5. PIN 14 IS +5V, PIN 7 IS D.G. FOR IC 15 & IC 16.

TIB BOARD
BOARD NO. 1-619-177-11 & HIGHER
APR-5002/5003V

TIB BOARD

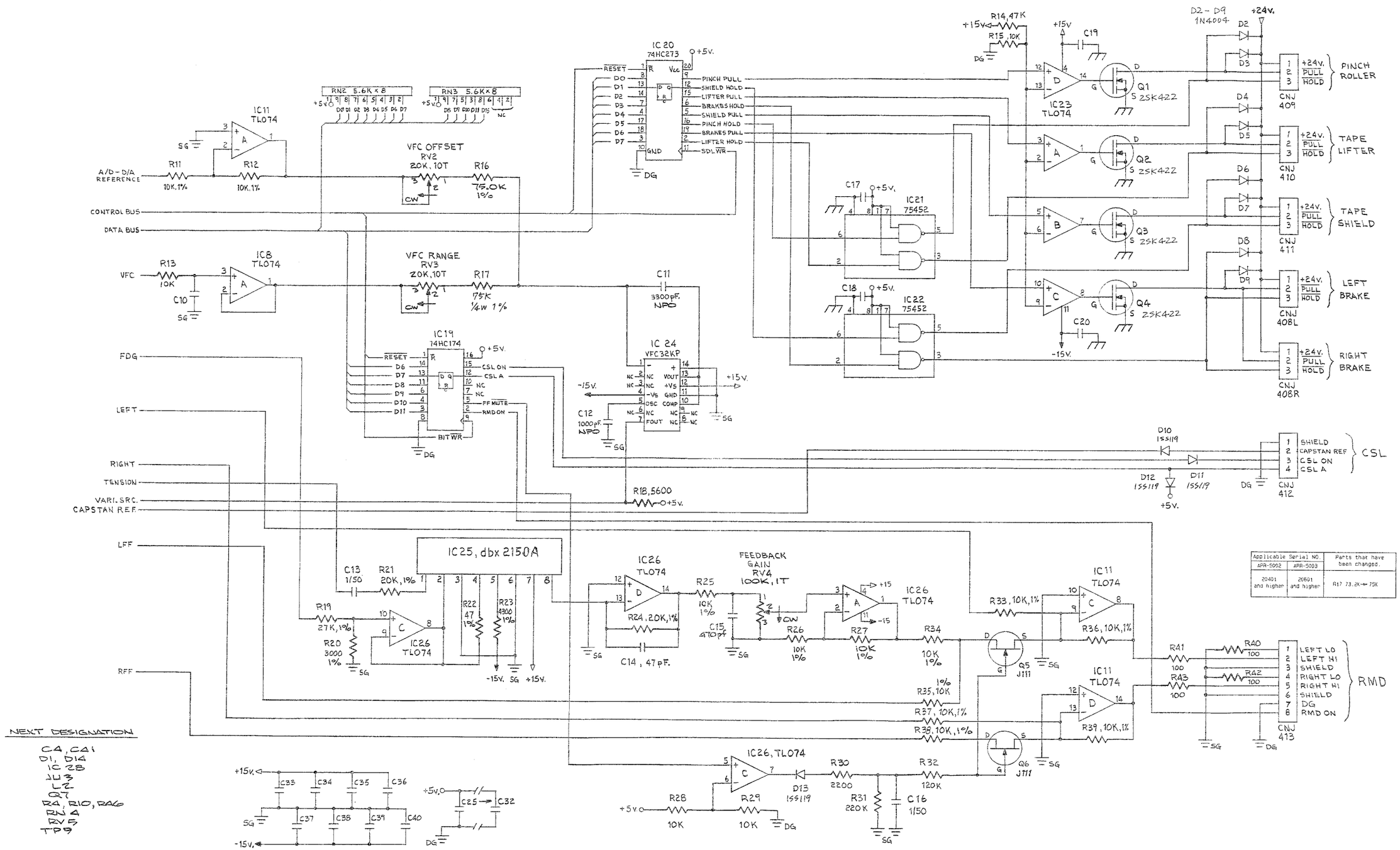

Applicable Serial NO.		Parts that have been changed.
APR-5002	APR-5003	
20401 and higher	20601 and higher	R17 73.2K → 75K

TIB BOARD
BOARD NO. 1-619-177-11 & HIGHER
APR-5002/5003V

TTS BOARD (1-619-178-11)
Component Side

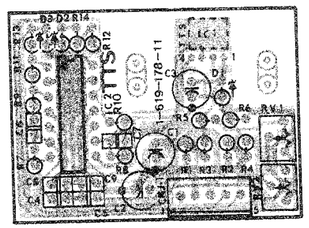

■ SOLDER SIDE PATTERN
▨ COMPONENT SIDE PATTERN 1-619-178-11

TTS BOARD

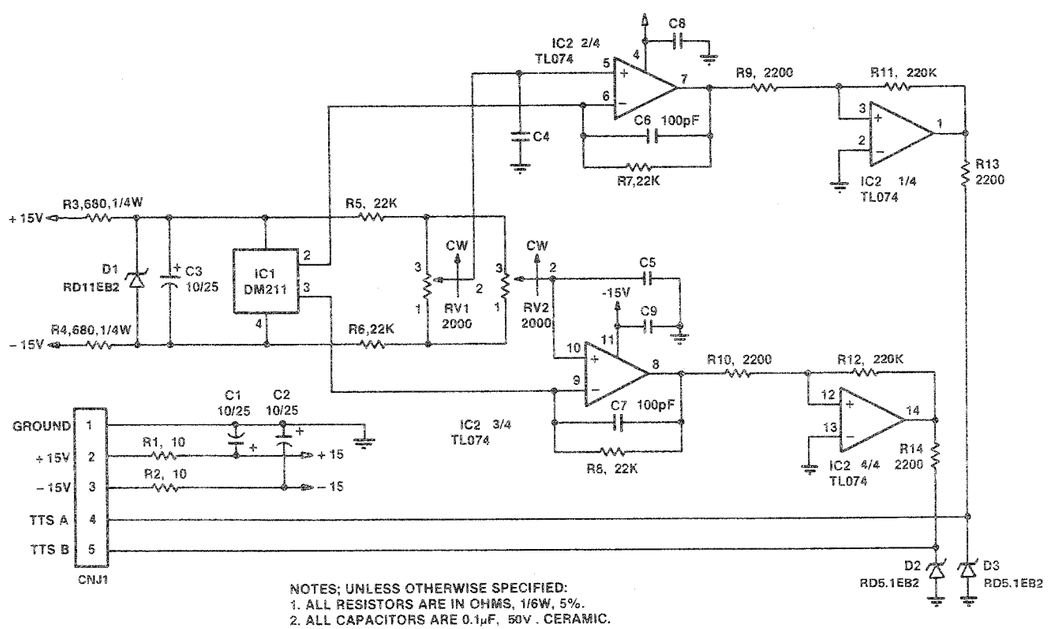

NOTES; UNLESS OTHERWISE SPECIFIED:
1. ALL RESISTORS ARE IN OHMS, 1/6W, 5%.
2. ALL CAPACITORS ARE 0.1μF, 50V. CERAMIC.
3. C4, C5 ARE NOT INSTALLED.

VVT BOARD (T-9413-749-1) APR-5003V ONLY
Component Side

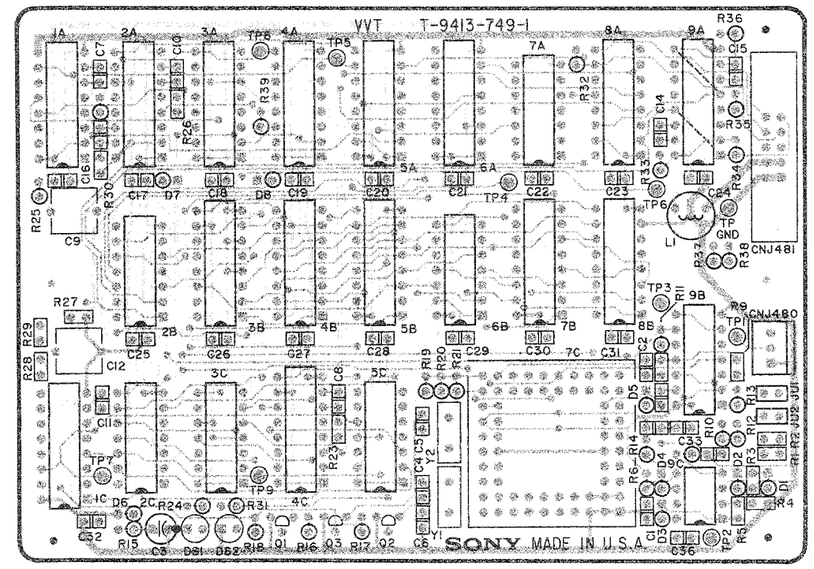

■ SOLDER SIDE PATTERN
▨ COMPONENT SIDE PATTERN

TTS BOARD
BOARD NO. 1-619-178-11 & HIGHER
APR-5002/5003V

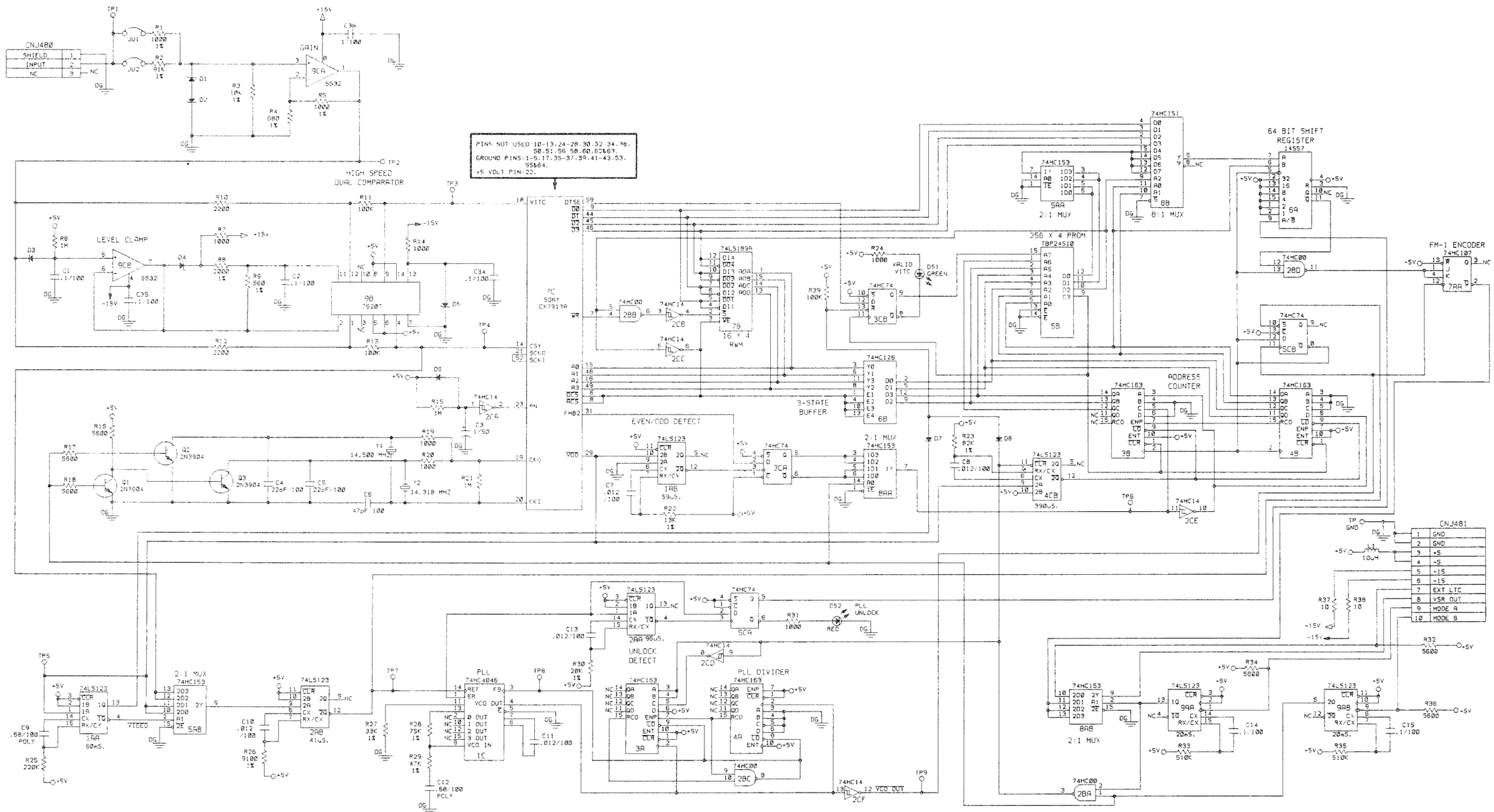

DECOUPLING CAPS		PWR PINS	
IC	+5V	+5V	GND
1A	C16..1/100	16	8
2A	C17..1/100	16	8
3A	C18..1/100	16	8
4A	C19..1/100	16	8
5A	C20..1/100	16	8
8A	C21..1/100	16	8
7A	C22..1/100	14	7
8A	C23..1/100	16	8
9A	C24..1/100	16	8
2B	C25..1/100	14	7
3B	C26..1/100	16	8
4B	C27..1/100	16	8
5B	C28..1/100	16	8
6B	C29..1/100	14	7
7B	C30..1/100	16	8

DECOUPLING CAPS		PWR PINS	
IC	+5V	+5V	GND
8B	C31..1/100	16	8
9B	C33..1/100	14	7
1C	C32..1/100	16	8
2C	———	14	7
3C	———	14	7
4C	———	16	8
5C	———	14	7
7C	C37..1/100	47.61	40.54
9C	———	———	———

TEST POINTS	
1	INPUT SIGNAL
2	INPUT X GAIN/LOSS
3	LOGIC LEVEL VITC
4	LOGIC LEVEL SYNC
5	VERTICAL DETECT
6	FRAME DETECT
7	PLL REFERENCE
8	PLL FEEDBACK
9	VCO OUTPUT

MODE TABLE

B \ A	0	1
0	BY-PASS	PAL EBU
1	NTSC SMPTE	FILM

NOTES:
1)UNLESS OTHERWISE SPECIFIED:
ALL RESISTORS ARE IN OHMS, 5%, 1/6W.
ALL CAPACITORS ARE IN MICROFARADS/VOLTS MLC TYPE
ALL DIODES ARE 1N914.
ALL ZENERS ARE 1N5231B.
ALL 1% RESISTORS ARE RADIAL LEADFORM,1/8W,METAL.

UNUSED DEVICES

VVT BOARD
BOARD NO.T-9413-749-1 & HIGHER
APR-5003V

CSL BOARD (1-619-163-12)
Component Side

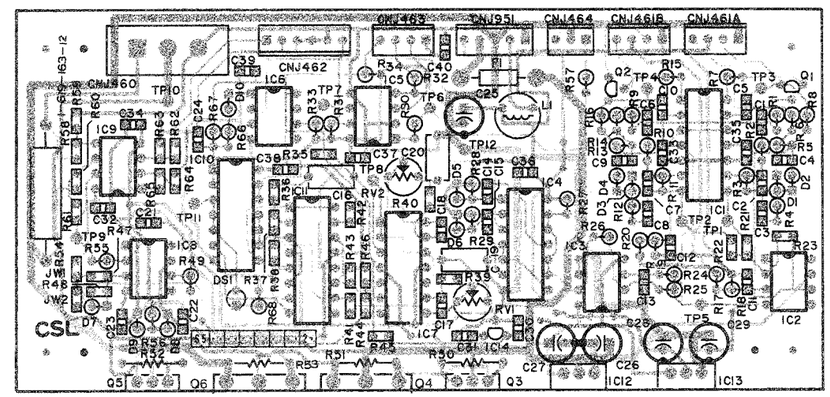

■ SOLDER SIDE PATTERN 1-619-163-12
■ COMPONENT SIDE PATTERN 1-619-163-12

CSL BOARD

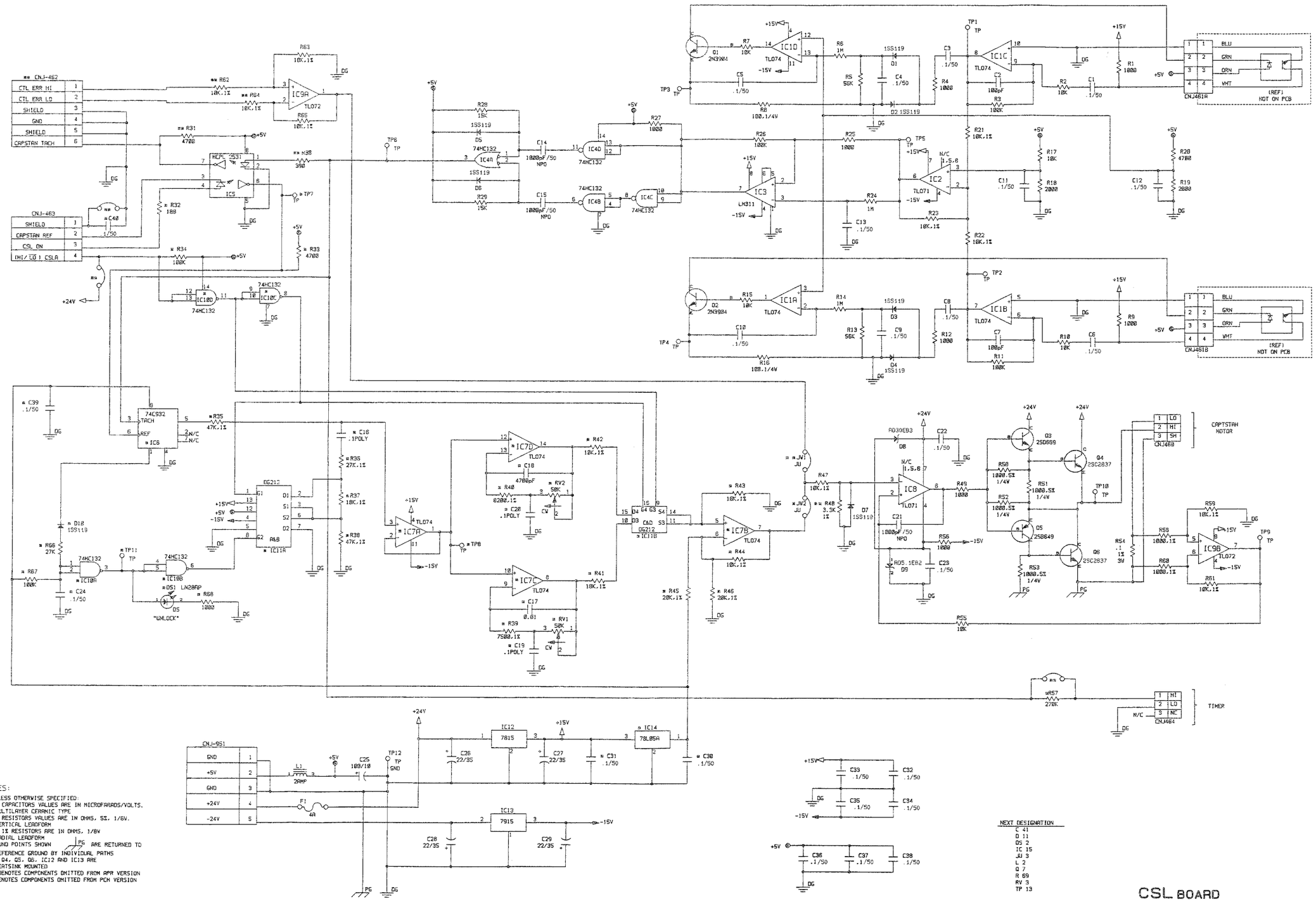

CSL BOARD
BOARD NO.1-619-163-11 & HIGHER
APR-5002/5003V

PDB BOARD (1-619-171-11)
Component Side

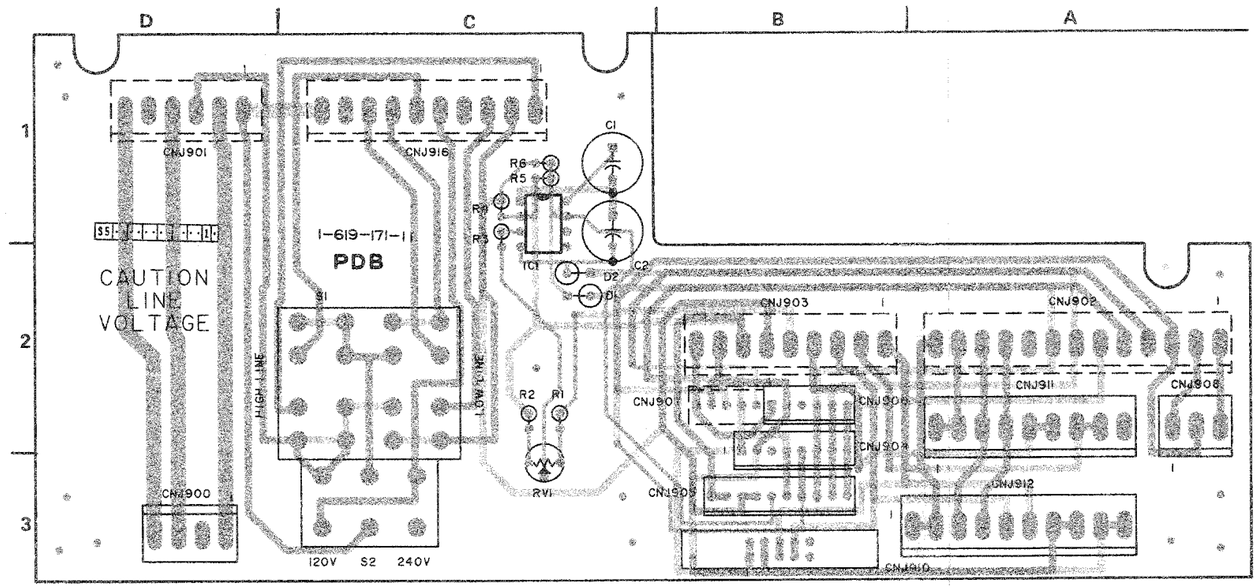

■ SOLDER SIDE PATTERN 1-619-171-11
■ COMPONENT SIDE PATTERN 1-619-171-11

PDB BOARD

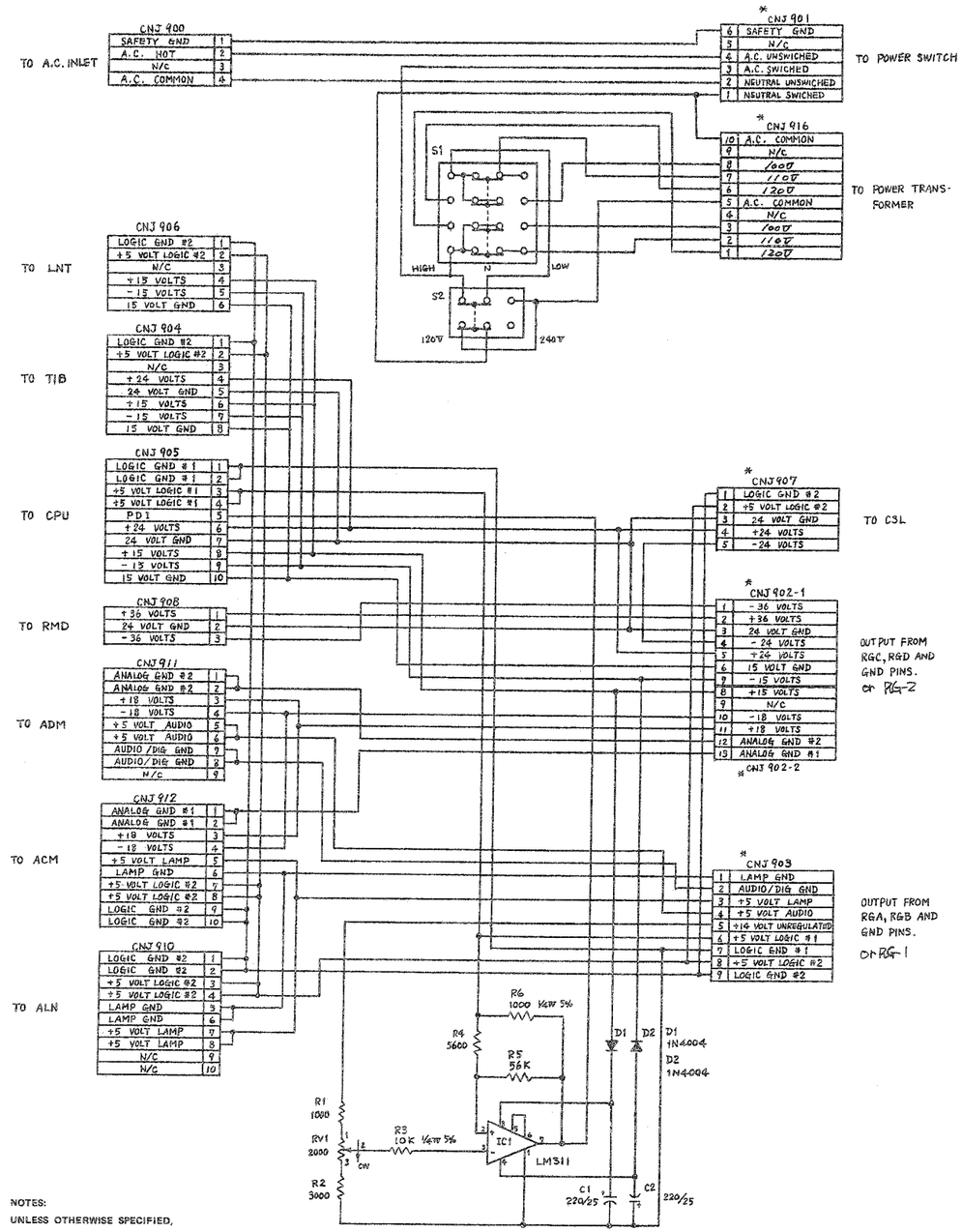

NOTES:

UNLESS OTHERWISE SPECIFIED,

1. ALL RESISTOR VALUES ARE IN OHMS, 1/3W, 1%.
2. CONNECTORS MARKED * ARE LOCATED ON THE SOLDER SIDE OF THE P.C. BOARD.

PDB BOARD
BOARD NO. 1-619-171-11 & HIGHER
APR-5002/5003V

RGA BOARD (1-619-172-12) S/N: APR-5002 20001 TO 20615
Component Side

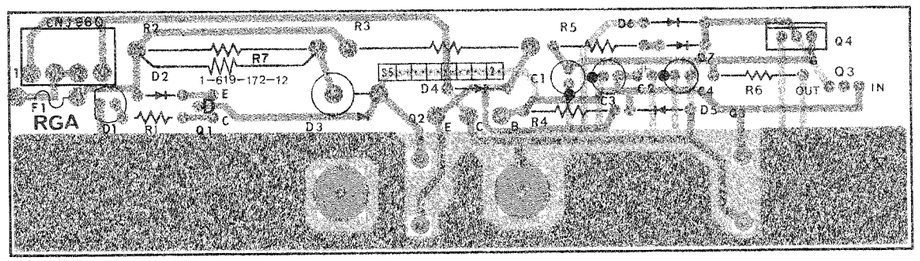

■ SOLDER SIDE PATTERN 1-619-172-12
■ COMPONENT SIDE PATTERN 1-619-172-12

RGB BOARD (1-619-173-12) S/N: APR-5002 20001 TO 20615
Component Side

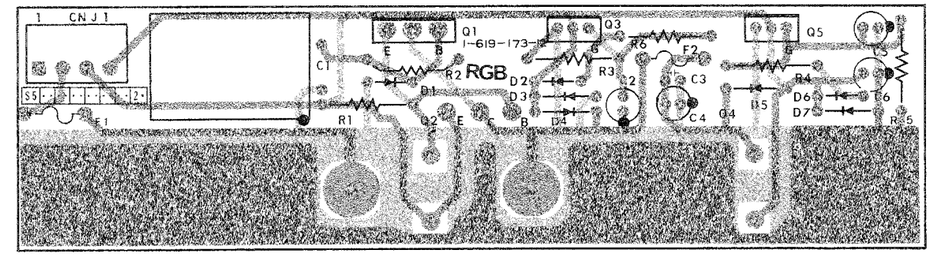

■ SOLDER SIDE PATTERN 1-619-173-12
■ COMPONENT SIDE PATTERN 1-619-173-12

RGA BOARD

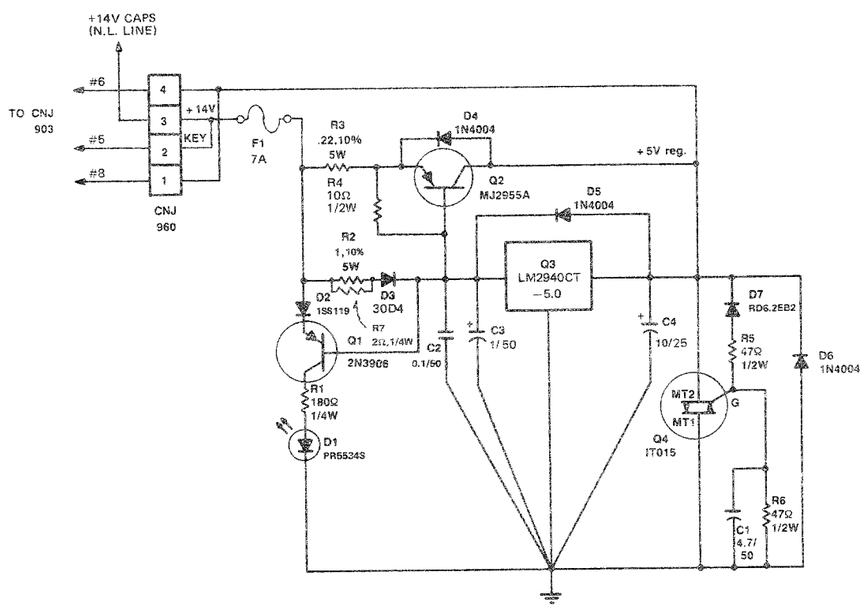

RGB BOARD

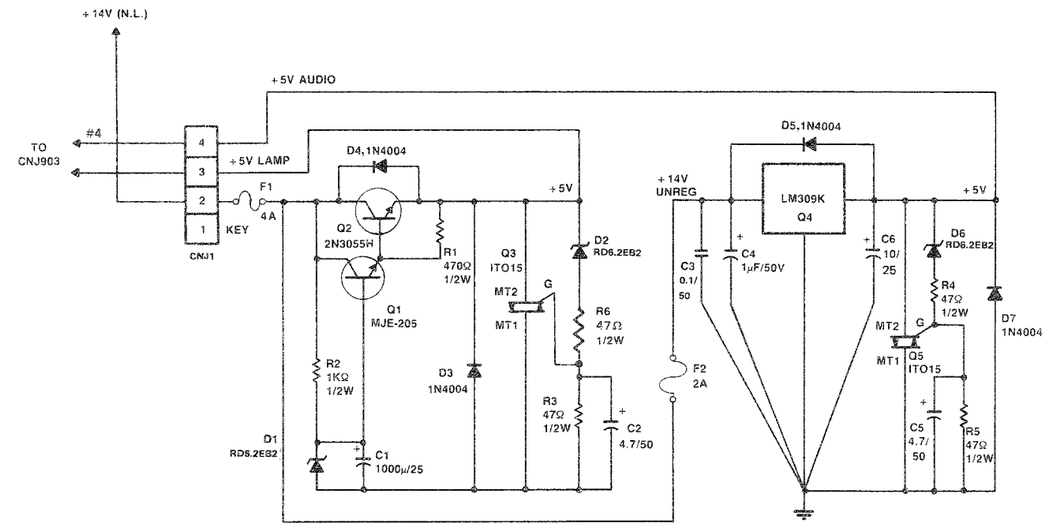

*ALL UNREGULATED VOLTAGE LINES
ARE REFERENCED NO LOAD (N.L.)

RGA BOARD
BOARD NO.1-619-172-12
APR-5002

RGB BOARD
BOARD NO.1-619-173-12
APR-5002

RG-1 BOARD (1-622-916-11)
Component Side

S/N: APR-5002	20701 AND HIGHER
S/N: APR-5003V	10001 AND HIGHER

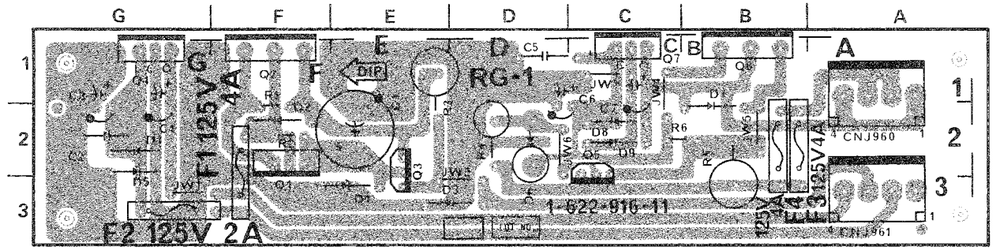

● SOLDER SIDE PATTERN 1-622-916-11

RG-1 BOARD

D1 RD6.2EB2 D2,3,4,5 1N4004
Q1 2SD1133 Q3 2SC2603 Q4 uPC7805H Q5 2SA1115 Q6 2SA1265 Q7 LM2940
Q2 2SC3182 D6 30D4 D7,8,9 1N4004

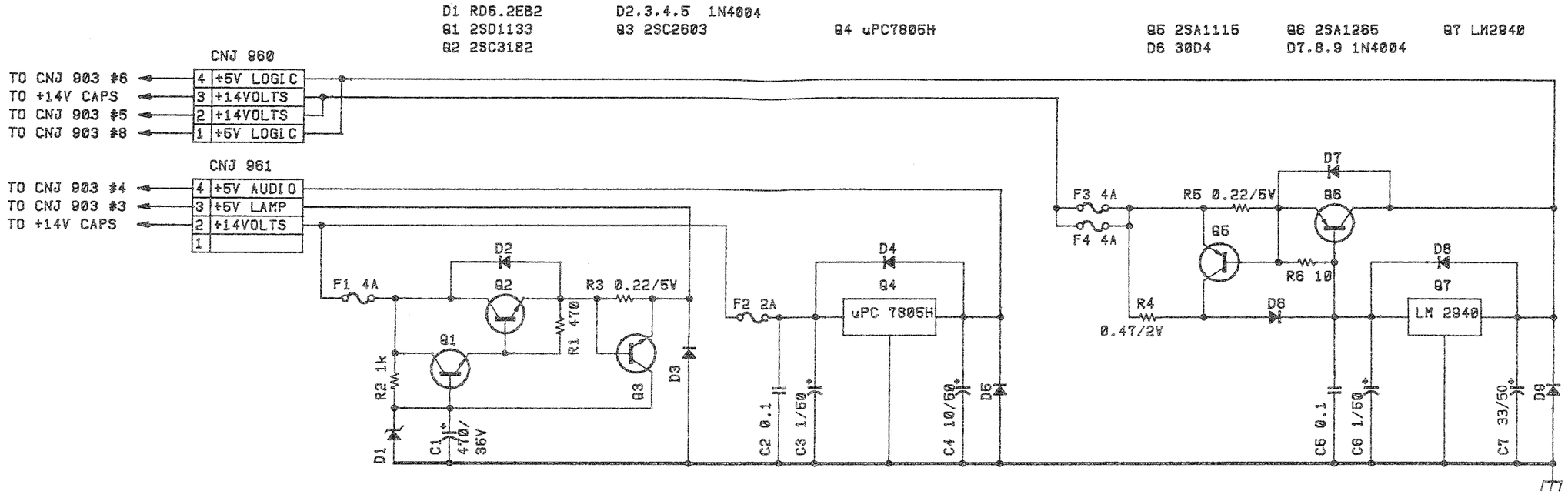

RG-1 BOARD
BOARD NO.1-622-916-11 & HIGHER
APR-5002/5003V

RGC BOARD (1-619-174-11) S/N; APR-5002 20001 TO 20615
Component Side

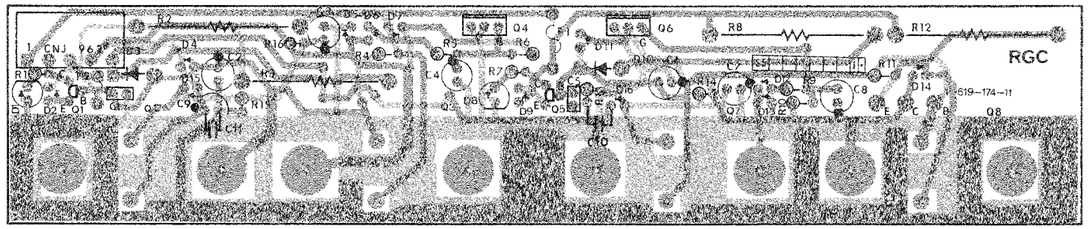

■ SOLDER SIDE PATTERN 1-619-174-11
■ COMPONENT SIDE PATTERN 1-619-174-11

RGD BOARD (1-619-175-11) S/N; APR-5002 20001 TO 20615
Component Side

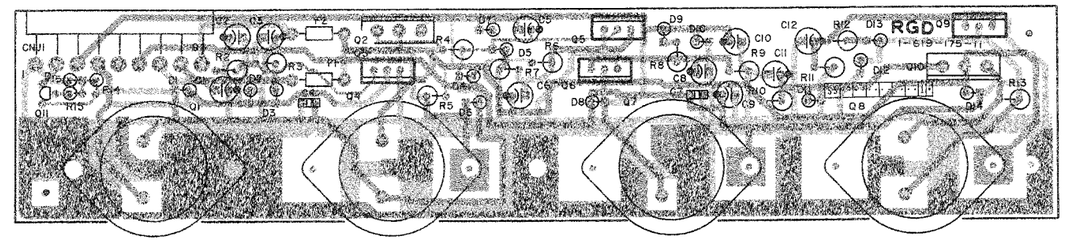

■ SOLDER SIDE PATTERN 1-619-175-11
■ COMPONENT SIDE PATTERN 1-619-175-11

RGC BOARD

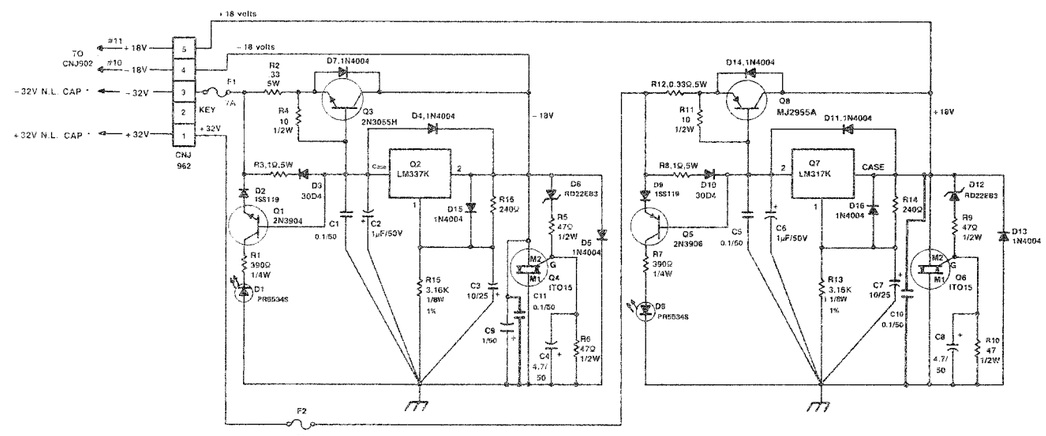

* ALL UNREGULATED VOLTAGE LINES ARE REFERENCED NO LOAD (N.L.).

RGD BOARD

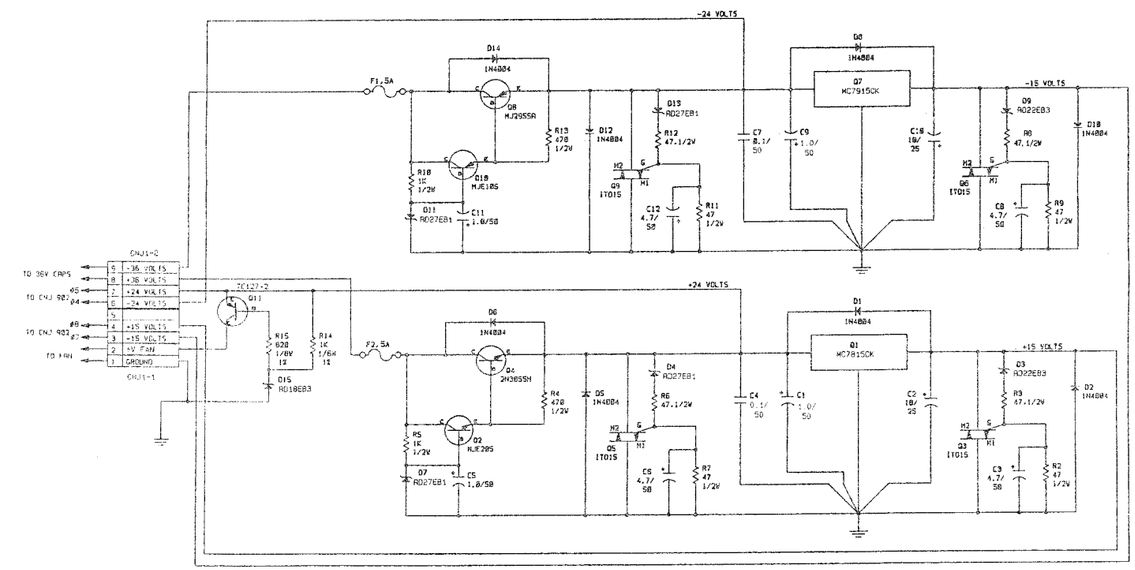

RGC BOARD
BOARD NO.1-619-174-11
APR-5002

RGD BOARD
BOARD NO.1-619-175-11
APR-5002

RG-2 BOARD (1-622-917-11)
Component Side

S/N; APR-5002 20701 AND HIGHER
S/N; APR-5003V 10001 AND HIGHER

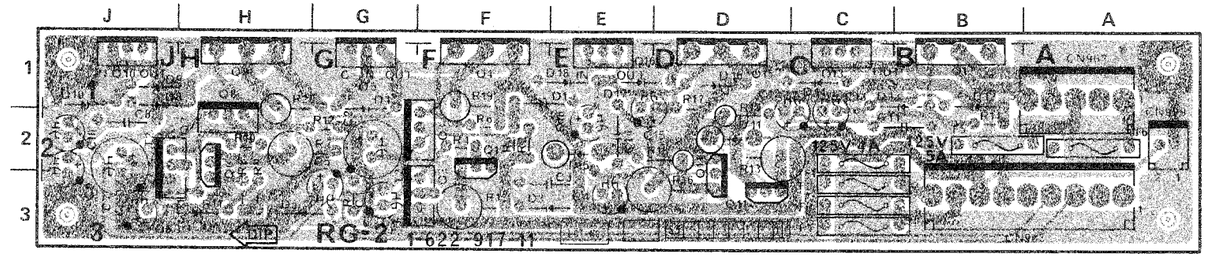

RG-2 BOARD

■ SOLDER SIDE PATTERN 1-622-917-11
■ COMPONENT SIDE PATTERN 1-622-917-11

D1,6 RD27FB2
D3,4,5 8,9,10 1N4004
Q1 2SD667
Q2 AC03FGMAY
Q3 2SB857C
Q4 2SA1265
Q5 uPC7915H
Q6 2SB647
Q7 AC03FGMAY
Q8 2SD1133
Q9 2SC3182
Q10 uPC7815H
D11,15 30D4
D12,13,14 16,17,18 1N4004
Q11 2SC2603
Q12 2SC3182
Q13 uPC7918H
Q14 2SA1115
Q15 2SA1265
Q16 uPC7818H

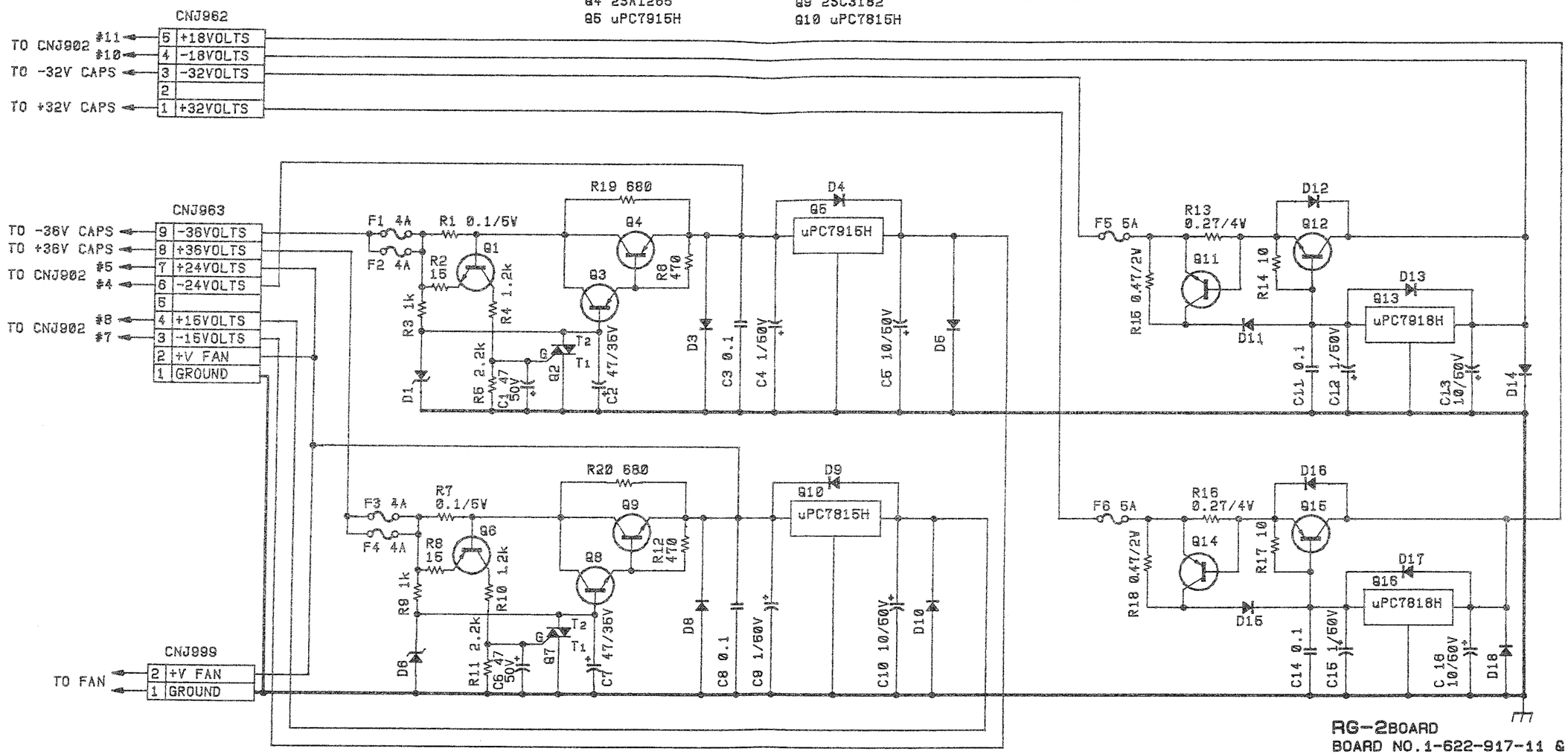

RG-2BOARD
BOARD NO.1-622-917-11 & HIGHER
APR-5002/5003V

POWER SUPPLY WIRING

S/N: APR-5002 20001 TO 20615

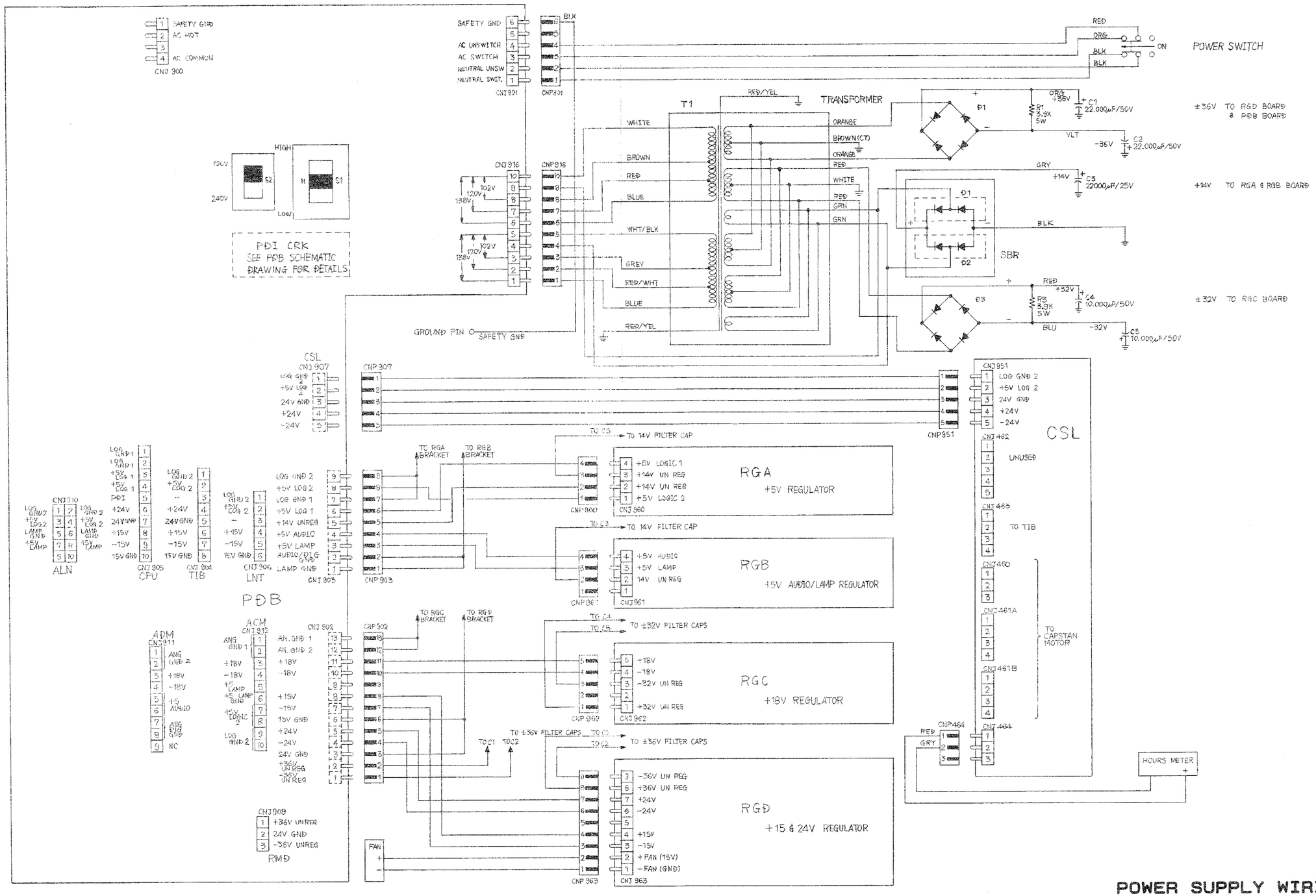

POWER SUPPLY WIRING
APR-5002

POWER SUPPLY WIRING

S/N: APR-5002 20701 AND HIGHER
S/N: APR-5003V 10001 AND HIGHER

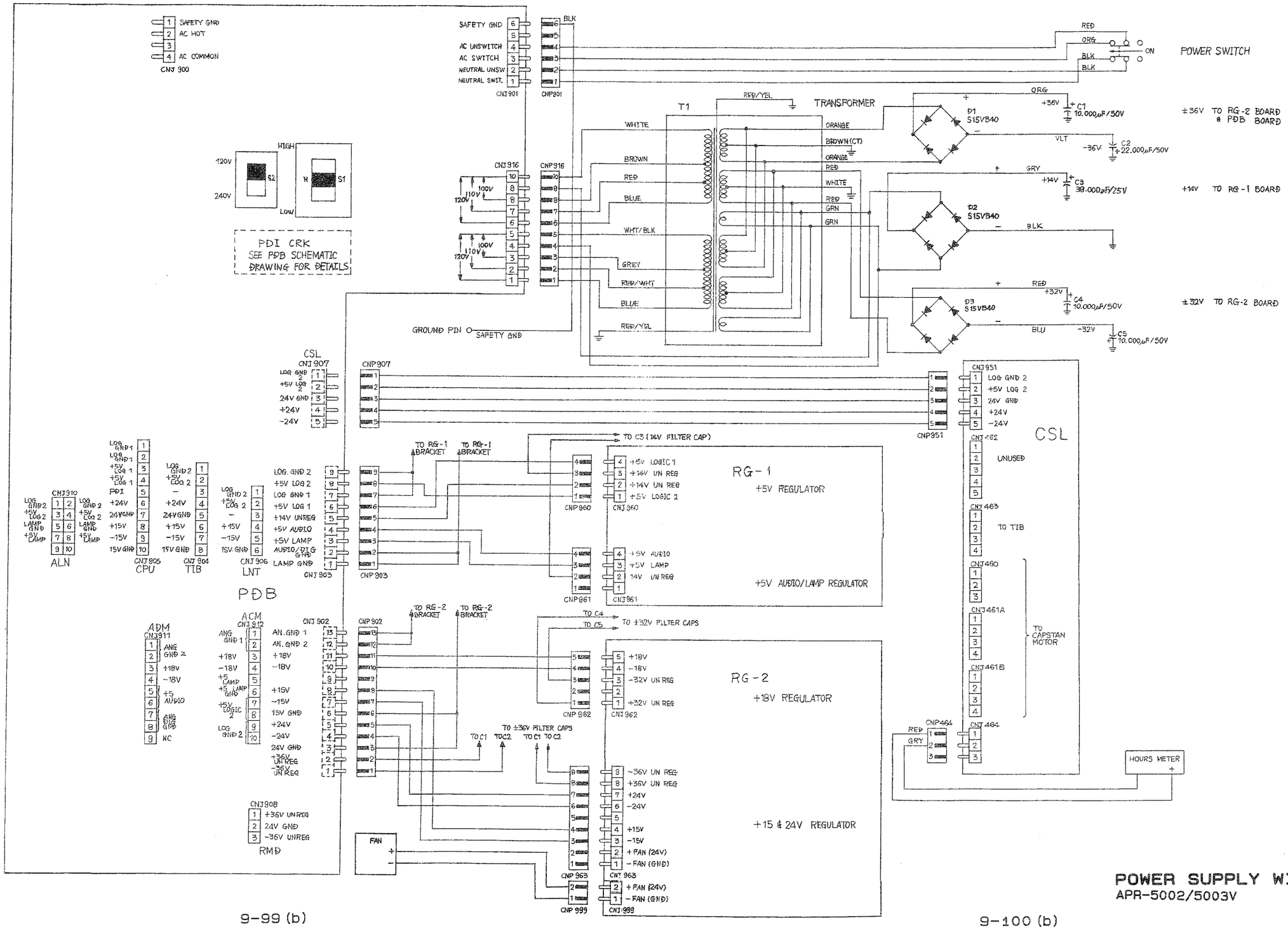

POWER SUPPLY WIRING
APR-5002/5003V

SONY

ANALOG TAPE RECORDER

APR-5001
APR-5002
APR-5003V
Series

OPERATION AND MAINTENANCE MANUAL

1st Edition (Revised 1)

APR-5001 Serial No.10001 and Higher

APR-5002 Serial No.20001 and Higher

APR-5003V Serial No.10001 and Higher

APR-5001/5002/5003V
3-711-352-02

Sony Corporation
© 1989

Printed in Japan
1989. 4 11

SECTION 10
REPLACEABLE PARTS

OVERVIEW

This section contains all of the exploded views, and parts list related to the APR-5001/5002/5003V series recorder.

PARTS INFORMATION

1. Safety Related Component Warning Components identified by shading marked with ⚠ on the exploded views and spare parts list are critical to safe operation. Replace these components with Sony parts whose parts numbers appear as shown in this manual or in service bulletins and service manual supplements published by Sony.
2. Replacement parts supplied from Sony Parts Center will sometimes have different shape and outside view from the parts which are actually in use. This is due to "accommodating improved parts and/or engineering changes" or "standardization of genuine parts."
   - These spare parts lists indicate the part numbers of "standardized genuine parts".
   - Refer to Sony service bulletins and service manual supplements regarding engineering parts changes in our engineering department.
3. The parts of SONY Parts No. marked with "S" in the SP column of the exploded views and electrical spare parts list are normally stocked for replacement purposes. The parts marked with "O" in the SP column are not normally required for routine service work. Orders for parts marked with "O" will be processed, but allow for additional delivery time.
4. Items with no part number and/or no description are not stocked because they are seldom required for routine service or are a part of another assembly.

10-1. EXPLODED VIEWS AND PARTS LIST

BOARD LAYOUT

S/N; APR-5002 20001 TO 20700

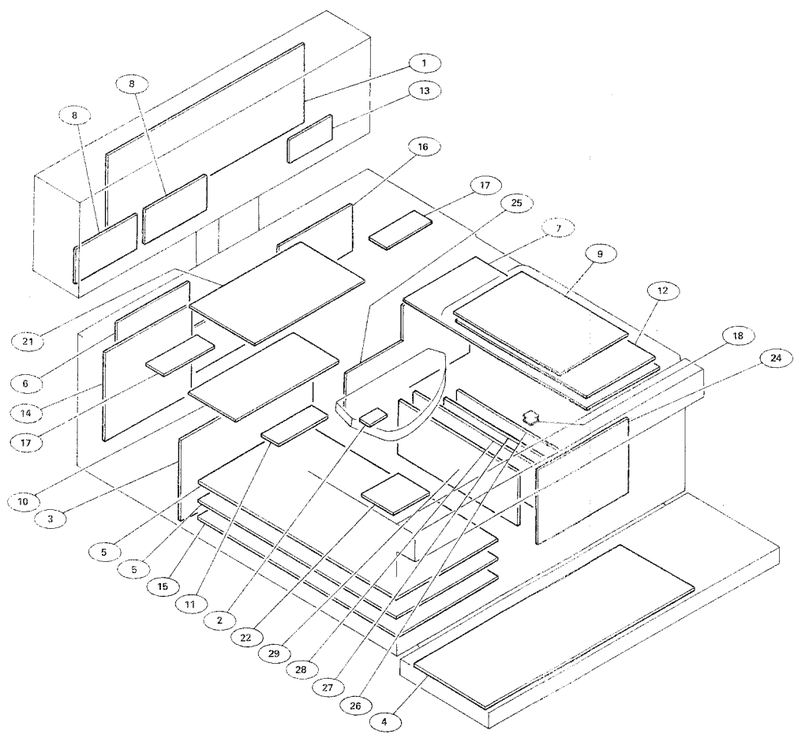

S/N; APR-5002 20701 AND HIGHER
S/N; APR-5003V 10001 AND HIGHER

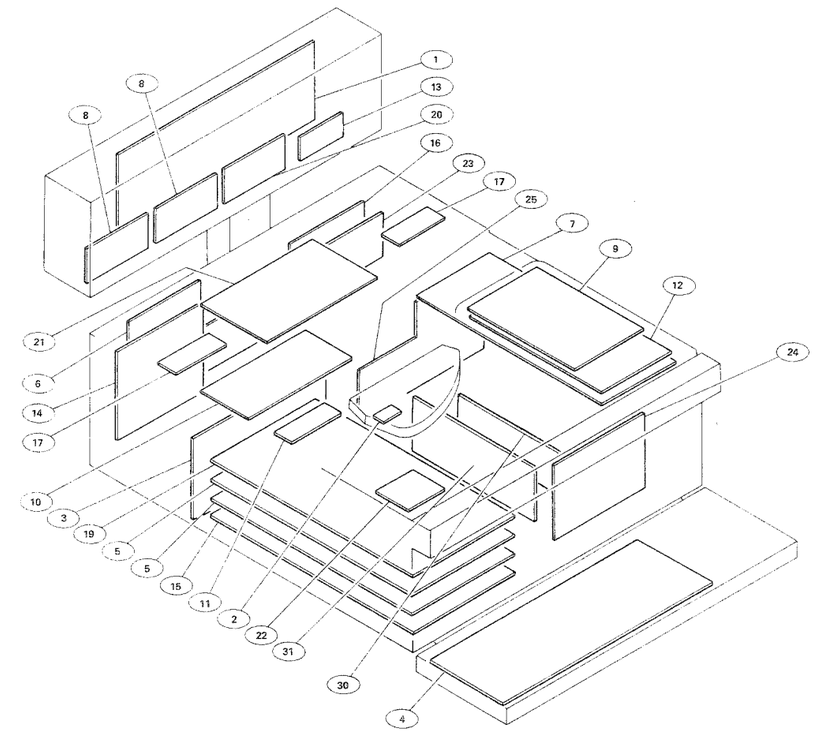

MAIN UNIT

1. ACM board
2. AHB board
3. ADM board
4. ALN board
5. CNL board
6. CNX board
7. CPU board
8. CTM board
9. DSP board
10. FEX board
11. HES board
12. KBD board
13. MSB board
14. LNT board
15. MST board
16. RMD board
17. RTS board
18. SBR board
19. TCC board (For APR-5003V)
20. TCM board (For APR-5003V)
21. TIB board
22. TTS board
23. VVT board (For APR-5003V)

POWER SUPPLY

24. CSL board
25. PDB board
26. RGA board
27. RGB board
28. RGC board
29. RGD board
30. RG-1 board
31. RG-2 board

NOTE: For detail information, refer to "10-2" Electrical Parts List.

POWER SUPPLY ASSY

S/N; APR-5002 20001 TO 20700

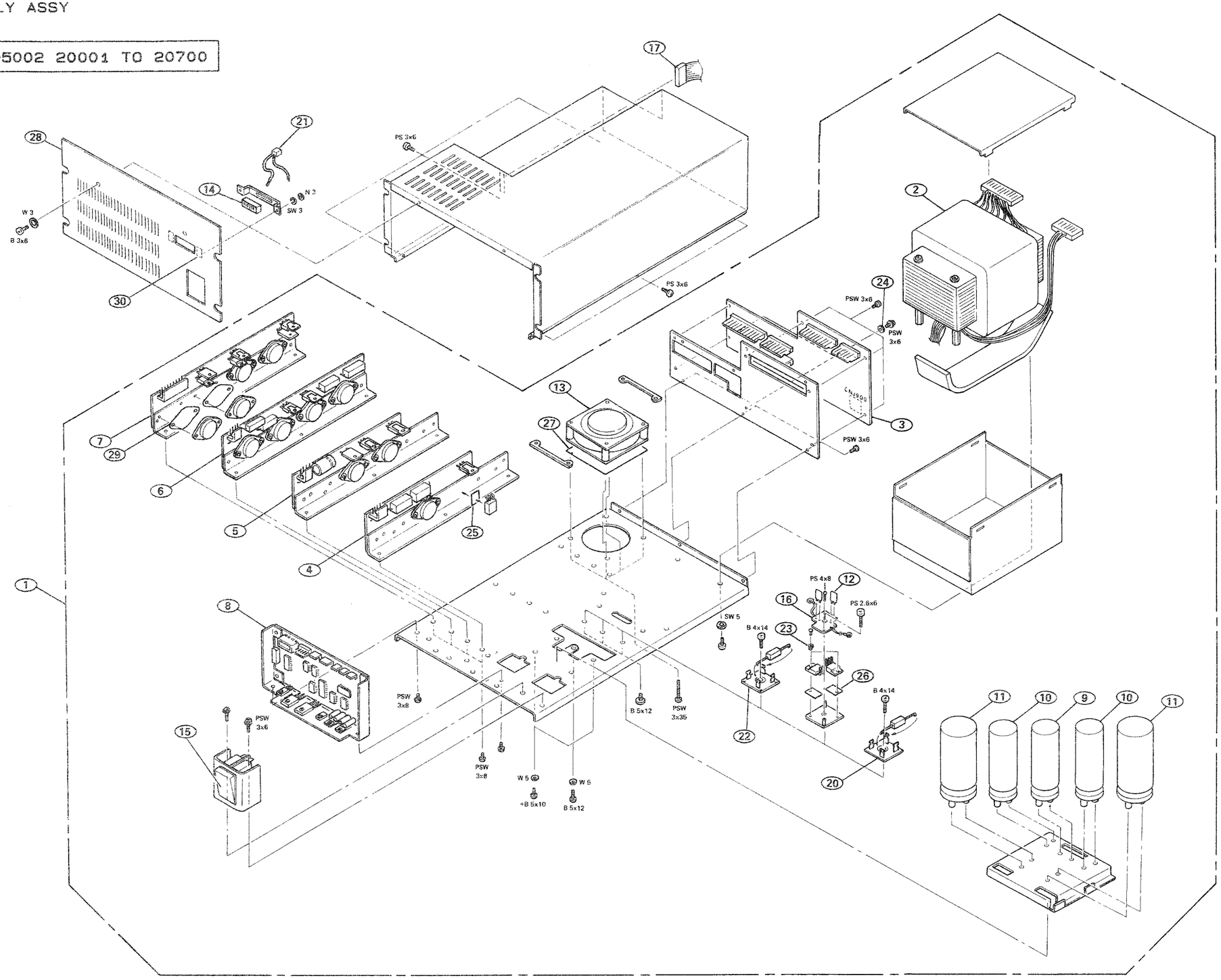

POWER SUPPLY ASSY

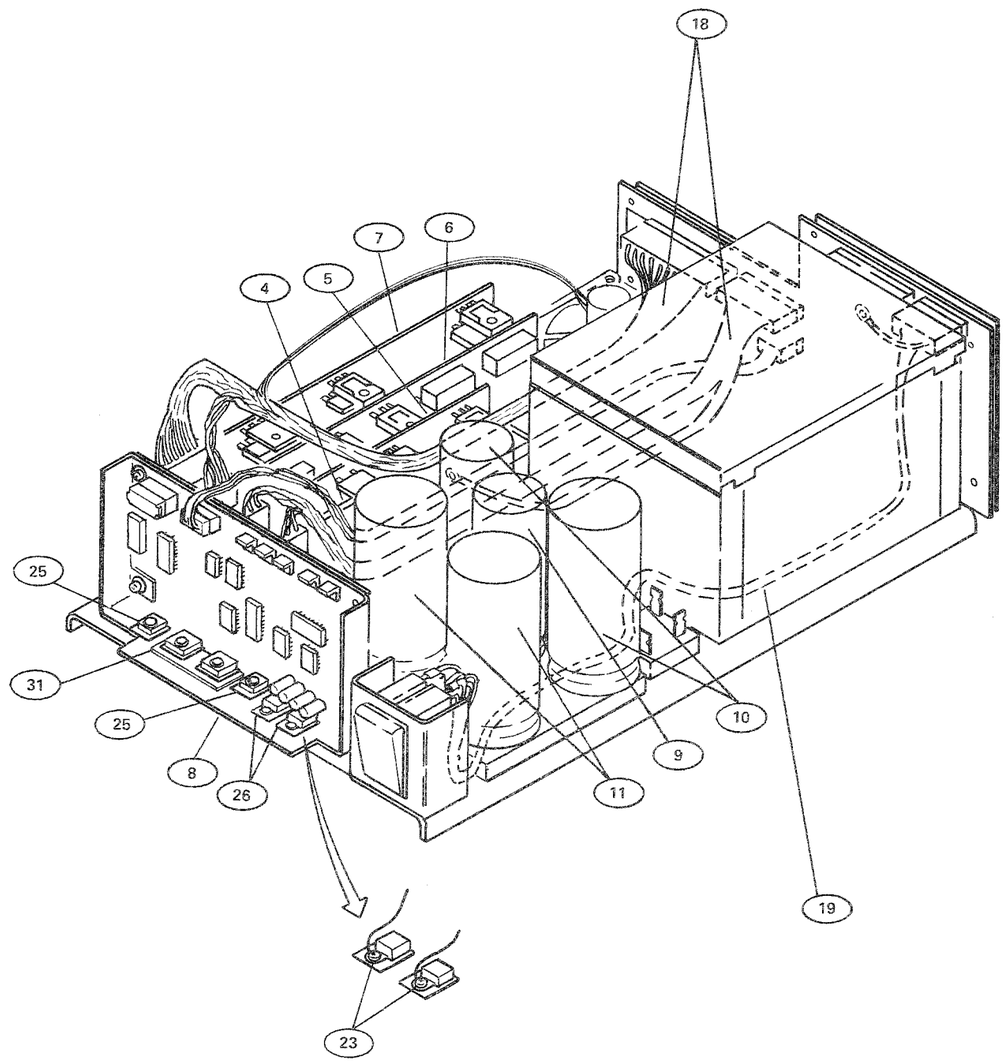

POWER SUPPLY ASSY

(APR-5002: Serial No. 20001 to 20700)

Ref. No.	SP	SONY Parts No.	Description
1	O	A-7810-201-A	POWER SUPPLY ASSY
2	O	⚠A-7810-278-A	TRANSFORMER ASSY, POWER
3	O	A-7850-341-A	MOUNTED PCB, PDB
4	O	A-7850-342-A	MOUNTED PCB, RGA
5	O	A-7850-343-A	MOUNTED PCB, RGB
6	O	A-7850-344-A	MOUNTED PCB, RGC
7	O	A-7850-345-A	MOUNTED PCB, RGD
8	O	A-7850-346-A	COMPLETE PCB ,CSL
9	O	1-125-453-10	CAP, ELECT 22000MF
10	O	1-125-454-10	CAP, ELECT 10000MF
11	S	1-125-455-10	CAP, ELECT 22000MF
12	O	1-535-419-00	TAB, FASTEN
13	S	1-541-409-11	FAN MOTOR
14	O	1-548-100-31	TIMER (S)
15	S	⚠1-554-066-00	SWITCH, SEESAW (AC POWER)
16	O	1-620-303-11	PC BOARD, SBR
17	O	1-937-528-11	HARNESS (POWER SUPPLY SUB)
18	O	1-937-540-12	HARNESS (POWER SUB)
19	O	⚠1-937-541-12	HARNESS (POWER SWITCH)
20	O	1-937-543-12	HARNESS (BRIDGE 1)
21	O	1-937-545-11	HARNESS (LIFE METER)
22	O	1-937-922-11	HARNESS (BRIDGE 3)
23	S	2-832-007-03	BUSHING, (K) INSULATING
24	S	3-564-542-01	WASHER, FIBER
25	S	3-566-928-01	SHEET, INSULATING
26	S	3-703-207-11	INSULATOR, TO-220
27	O	3-711-080-01	ISOLATOR, FAN
28	O	3-711-181-01	FRONT PANEL
29	S	4-848-640-11	PLATE, INSULATING, TO-3
30	S	4-849-592-00	CUSHION
31	O	4-857-833-00	INSULATOR, 03P

POWER SUPPLY ASSY

S/N: APR-5002 20701 AND HIGHER
S/N: APR-5003V 10001 AND HIGHER

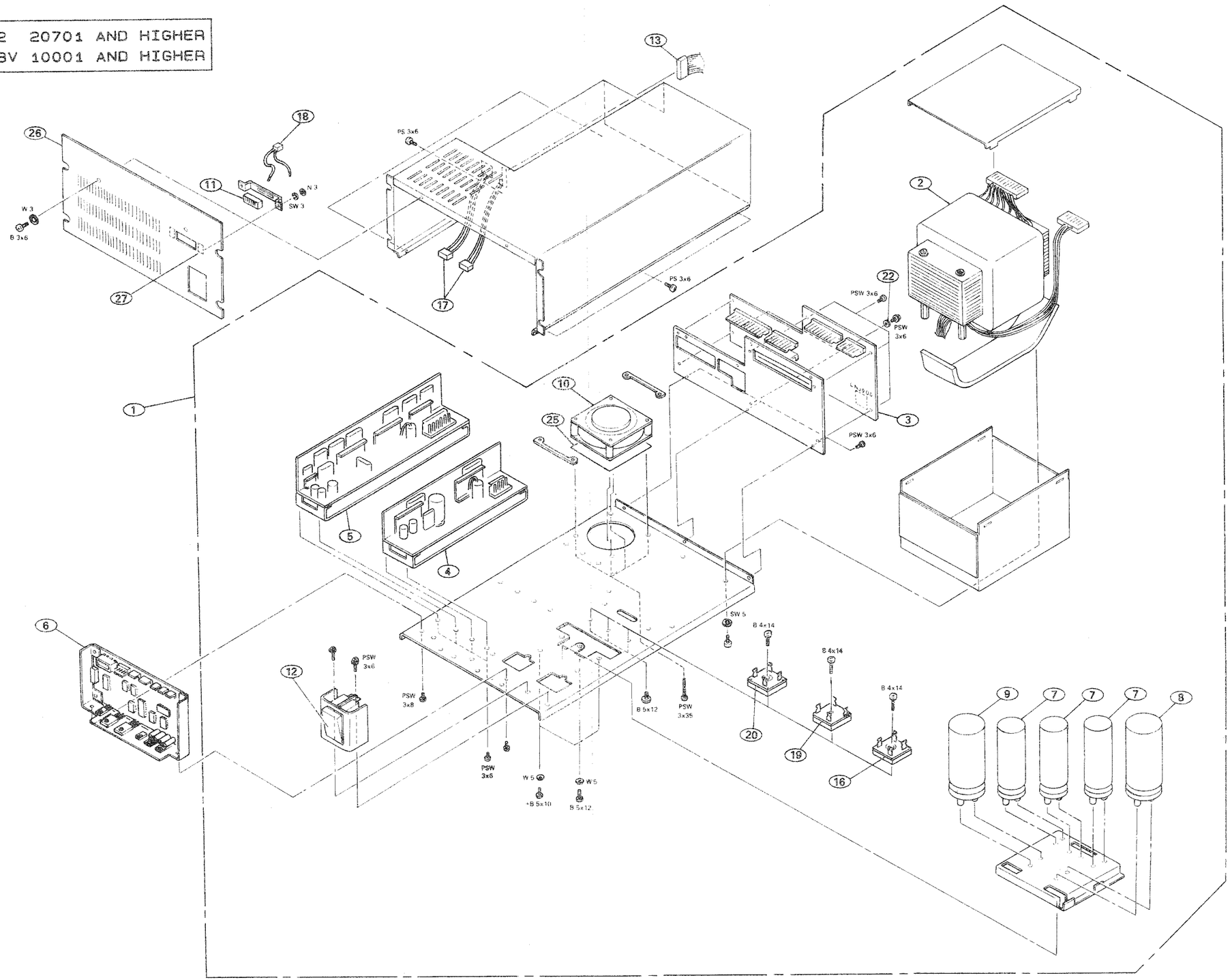

POWER SUPPLY ASSY

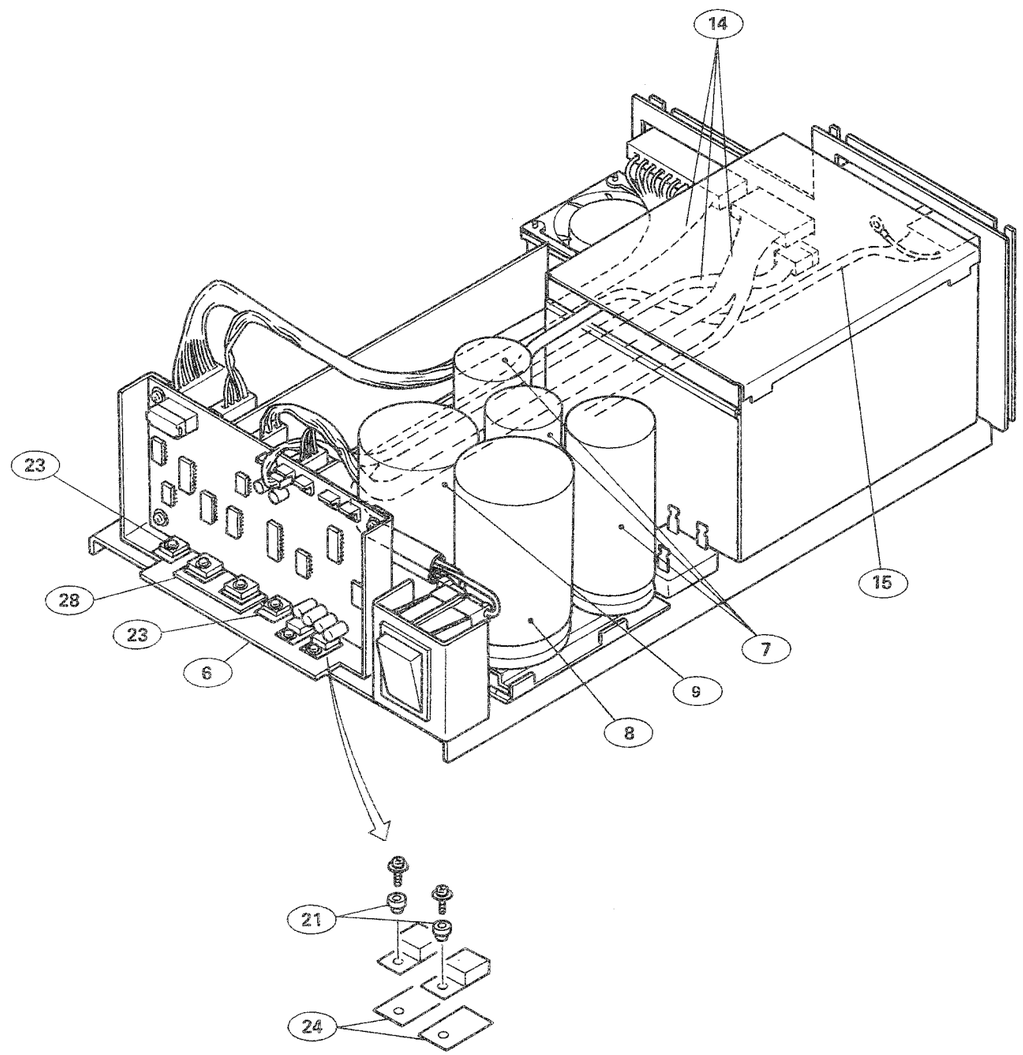

POWER SUPPLY ASSY

(APR-5002: Serial No. 20701 and higher
APR-5003V: Serial No. 10001 and higher)

Ref. No.	SP	SONY Parts No.	Description
1	O	A-7810-201-B	POWER SUPPLY ASSY
2	O	⚠A-7810-278-B	TRANSFORMER ASSY, POWER
3	O	A-7850-341-A	MOUNTED PCB, PDB
4	O	A-7850-517-A	MOUNTED PCB, RG-1
5	O	A-7850-518-A	MOUNTED PCB, RG-2
6	O	A-7850-346-A	COMPLETE PCB, CSL
7	S	1-125-454-11	CAP, ELECT 10000MF
8	S	1-125-455-11	CAP, ELECT 22000MF
9	S	1-125-484-11	CAP, ELECT 39000MF
10	S	1-541-409-21	FAN MOTOR
11	O	1-548-100-31	TIMER (S)
12	S	⚠1-554-066-00	SWITCH, SEESAW (AC POWER)
13	O	1-937-528-11	HARNESS (POWER SUPPLY SUB)
14	O	1-937-540-12	HARNESS (POWER SUB)
15	O	⚠1-937-541-12	HARNESS (POWER SWITCH)
16	O	1-937-543-12	HARNESS (BRIDGE 1)
17	O	1-937-544-12	HARNESS (CSL-CHASSIS)
18	O	1-937-545-11	HARNESS (METER)
19	O	1-937-921-12	HARNESS (BRIDGE 2)
20	O	1-937-922-11	HARNESS (BRIDGE 3)
21	S	2-832-007-00	BUSHING, (K) INSULATING
22	S	3-564-542-00	WASHER, FIBER
23	S	3-566-928-00	SHEET, INSULATING
24	S	3-703-207-11	INSULATOR, TO-220
25	O	3-711-080-01	ISOLATOR, FAN
26	O	3-711-181-01	FRONT PANEL
27	S	4-849-592-00	CUSHION
28	S	4-857-833-00	INSULATOR, 03P

"S" ROLLER ASSY

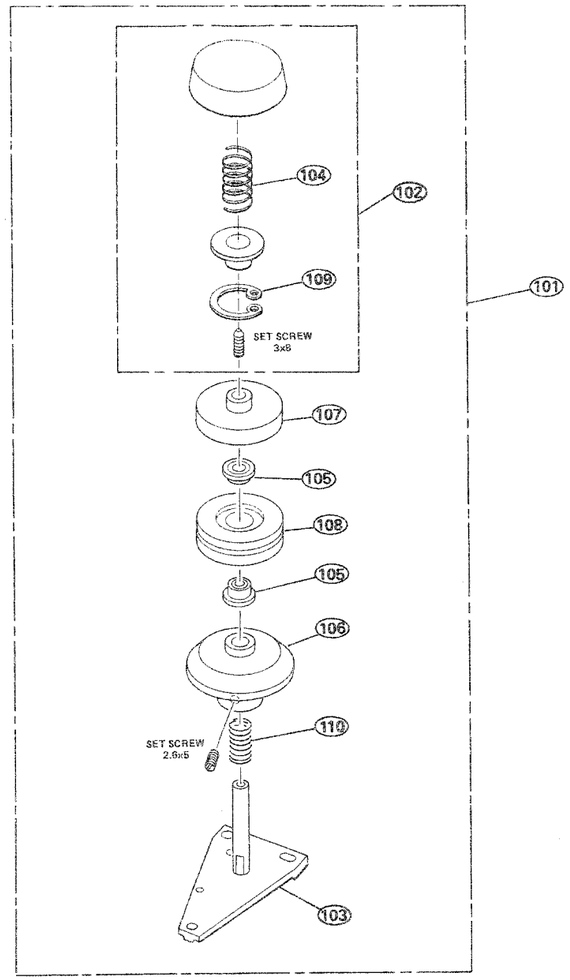

"S" ROLLER ASSY

Ref. No.	SP	SONY Parts No.	Description
101	O	A-7810-209-A	S-ROLLER ASSY
102	O	A-7810-210-A	ROLLER CAP ASSY
103	O	X-3711-021-1	ASSY, BASE "S" ROLLER
104	S	3-531-738-00	SPRING, COMPRESSION
105	S	3-651-607-00	BEARING (FLANGE) BALL
106	O	3-711-285-01	BOTTOM FLANGE "S" ROLLER
107	O	3-711-286-01	1/4" "S" FLANGE
108	O	3-711-287-01	"S" ROLLER
109	S	7-624-199-01	STOP RING 18, TYPE C
110	O	3-669-396-02	SPRING, COMPRESSION

TIMER ROLLER ASSY

Applicable Serial No.
APR-5002 No. 20201 and higher.
APR-5003V No. 10001 and higher.

Applicable Serial No.
APR-5002 Up to No. 20200

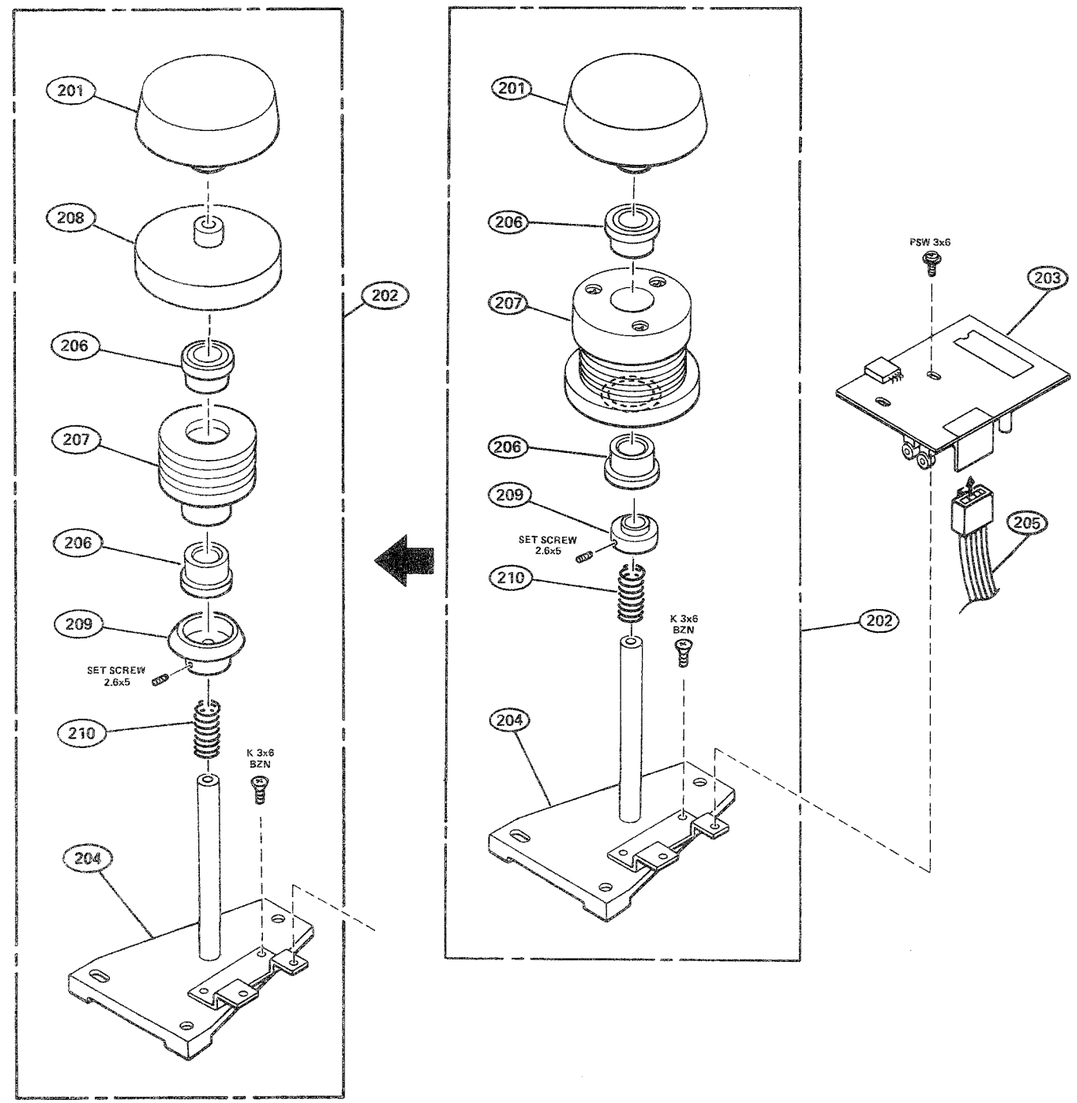

TIMER ROLLER ASSEMBLY

201	O	A-7810-210-A	ROLLER CAP ASSY
202	O	A-7810-212-A	TIMER ROLLER SUB ASSY
		(APR-5002 Up to No. 20200)	
		(APR-5003 Up to No. 20400)	
	O	A-7810-279-A	TIMER ROLLER SUB ASSY
		(APR-5002 No. 20201 and higher)	
		(APR-5003 No. 20401 and higher)	
203	S	A-7850-381-A	TTS MOUNT
204	O	X-3711-022-1	ASSY, BASE TIMER ROLLER
205	O	1-937-527-11	HARNESS (TTS, HES-TIB SUB)
206	O	3-651-607-00	BEARING (FLANGE), BALL
207	O	X-3711-030-1	TIMER ROLLER SUB ASSY
		(APR-5002 Up to No. 20200)	
		(APR-5003 Up to No. 20400)	
	O	X-3711-028-1	ROLLER HUB ASSY
		(APR-5002 No. 20201 and higher)	
		(APR-5003 No. 20401 and higher)	
208	O	3-711-286-01	1/4" "S" FLANGE
209	O	3-711-169-01	COLLAR, ROLLER
		(APR-5002 Up to No. 20200)	
		(APR-5003 Up to No. 20400)	
	O	3-711-337-01	BOTTOM FLANGE-TIMER ROLLER
		(APR-5002 No. 20201 and higher)	
		(APR-5003 No. 20401 and higher)	
210	O	3-669-396-02	SPRING, COMPRESSION

FLUTTER ARM ASSY

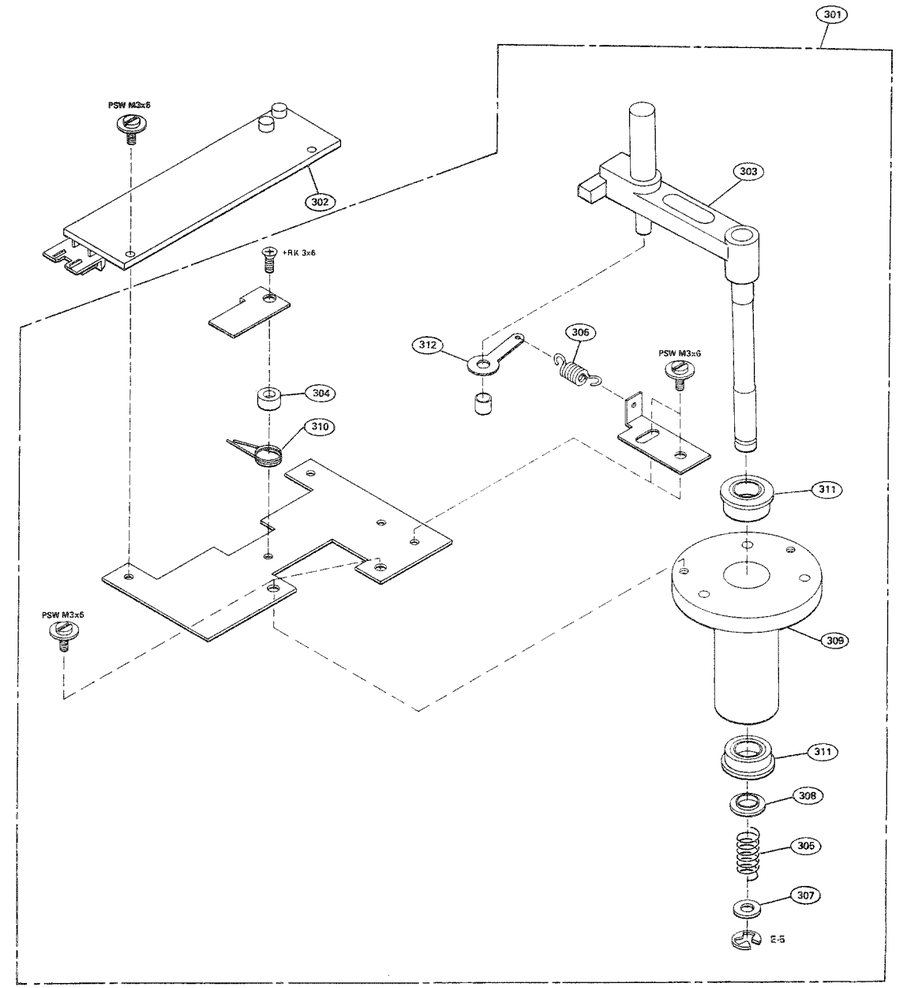

FLUTTER ARM ASSY

301	O	A-7810-216-A	FLUTTER ARM SUB ASSY
302	S	A-7850-351-A	HES MOUNT
303	O	X-3711-004-1	TENSION ARM ASSY
304	S	3-143-065-00	SPACER
305	S	3-571-836-11	SPRING, COMPRESSION
306	S	3-642-491-00	SPRING, TENSION
307	S	3-701-444-21	WASHER, 6
308	S	3-711-027-01	SPACER (DIA 6)
309	O	3-711-053-01	HUB-TENSION REG
310	S	3-711-146-01	SPRING, TORSION
311	S	3-651-607-00	BEARING, FLANGE BALL
312	S	7-623-510-01	LUG, 4

1/4-INCH HEADSTACK ASSY

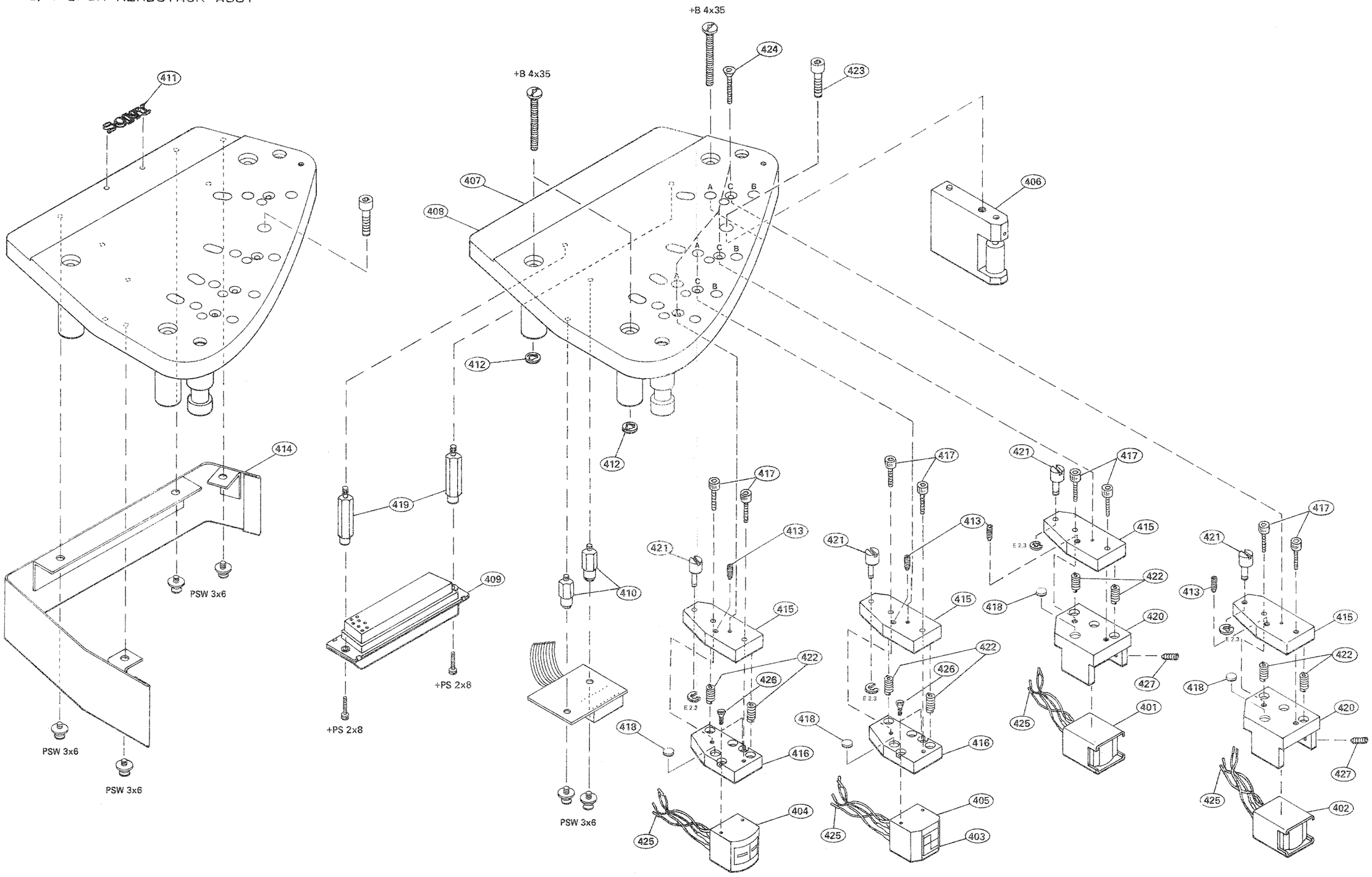

1/4-INCH HEADSTACK ASSY

Ref. No.	SP	SONY Parts No.	Description
	O	*A-7810-230-A	HEAD STACK ASSY (For APR-5003V only) (This assembly includes the following parts.)
401	S	T-9410-181-1	1/4" 2TRK (NAB) REC HEAD
402	S	1-543-447-11	1/4" 2TRK (NAB) REP 80MH
403	S	T-9412-410-1	ERASE HEAD (For APR-5002A)
404	S	1-543-450-11	HEAD, 1/4", TC ERASE/TC RP (For APR-5003A)
405	S	1-543-449-11	HEAD, 1/4", 2TRK, ERASE, TC FORMAT (For APR-5003V)
406	S	T-9481-639-1	ASSY, SCRAPE FILTER, 1/4"
407	O	X-3711-014-1	BASE PLATE (1/4) ASSY (For APR-5002A)
408	O	X-3711-020-1	BASE PLATE TC ASSY (For APR-5003V)
409	O	1-937-559-12	HARNESS (HEAD STACK) 78P
410	O	2-264-136-00	SUPPORT, SWITCH, PUSH BUTTON
411	O	3-672-268-00	EMBLEM, SONY
412	O	3-673-968-00	STOPPER, SCREW
413	S	3-701-512-01	SET SCREW, DOUBLE POINT,(M4x8)
414	O	3-711-112-02	SIDE COVER (1/4")
415	O	3-711-113-01	PLATE. HEAD CAM
416	O	3-711-114-01	PLATE. HEAD MOUNTING
417	O	3-711-131-11	SCREW, M2.6x13 ALLEN CAP
418	O	3-711-183-01	DISC PRESSURE HD. BLOCK ASSY
419	O	3-711-191-01	STAND OFF CONNECTOR (S)
420	O	3-711-227-01	PLATE, HEAD MOUNTING (2)
421	O	3-711-246-01	CAM, WRAP ADJ. HEAD MTG BLOCK
422	S	3-711-280-01	COMPRESSION SPRING
423	S	T-9453-548-1	SCREW, 8-32x1/2 ALLEN CAP
424	S	4-911-928-11	BOLT M3x12
425	S	T-9412-251-1	CONTACT, CONNECTOR
426	S	T-9453-424-1	SCREW, 3-48x3/16FL HD
427	S	3-701-507-00	SET SCREW M3x5

NOTE: * For APR-5002, the following options are available on request.
APR-HB5001 (Monaural)
APR-HB5002 (2-channel)
APR-HB5002D (DIN)
APR-HB5002H (Half inch 2-channel)

LIFTER & SHIELD ASSY

(APR-5002: Serial No. 20001 to 20700)

Ref. No.	SP	SONY Parts No.	Description
501	O	A-7810-217-A	LIFTER & SHIELD ASSY
502	O	X-3711-009-1	PLATE (A) ASSY, LIF
503	O	X-3711-010-1	PLATE (B) ASSY, LIF
504	O	X-3711-011-1	BASE PLATE LIF & SHD ASSY
505	O	X-3711-012-3	SHIELD PLATE ASSY
506	S	1-454-426-41	SOLENOID, PLUNGER
507	O	1-937-558-11	HARNESS (EOT-KBD)
508	S	3-509-043-11	FELT
509	O	3-564-108-00	SPRING, TENSION
510	S	3-659-365-00	SPACER (4x3)
511	O	3-711-115-01	PIN, SOLENOID
512	O	3-711-116-01	PLATE D, LIFTER
513	O	3-711-120-01	SHAFT ARM
514	O	3-711-167-01	PLATE C, LIFTER
515	O	3-711-220-01	SHAFT, SOLENOID SHIELD
516	O	3-711-221-01	SHAFT, TRANSMISSION SHIELD
517	O	3-711-224-01	ARM SHIELD
518	O	3-711-225-01	LIMITER PLATE SHIELD
519	O	3-711-226-01	BRACKET, AIRPOT SHIELD
520	O	3-711-229-01	BUSHING, SHIELD ASSY
521	O	3-711-282-01	ADJUSTABLE AIR DASHPOT
522	S	4-836-109-00	SPRING, COMPRESSION

LIFTER & SHIELD ASSY

S/N; APR-5002 20001 TO 20700

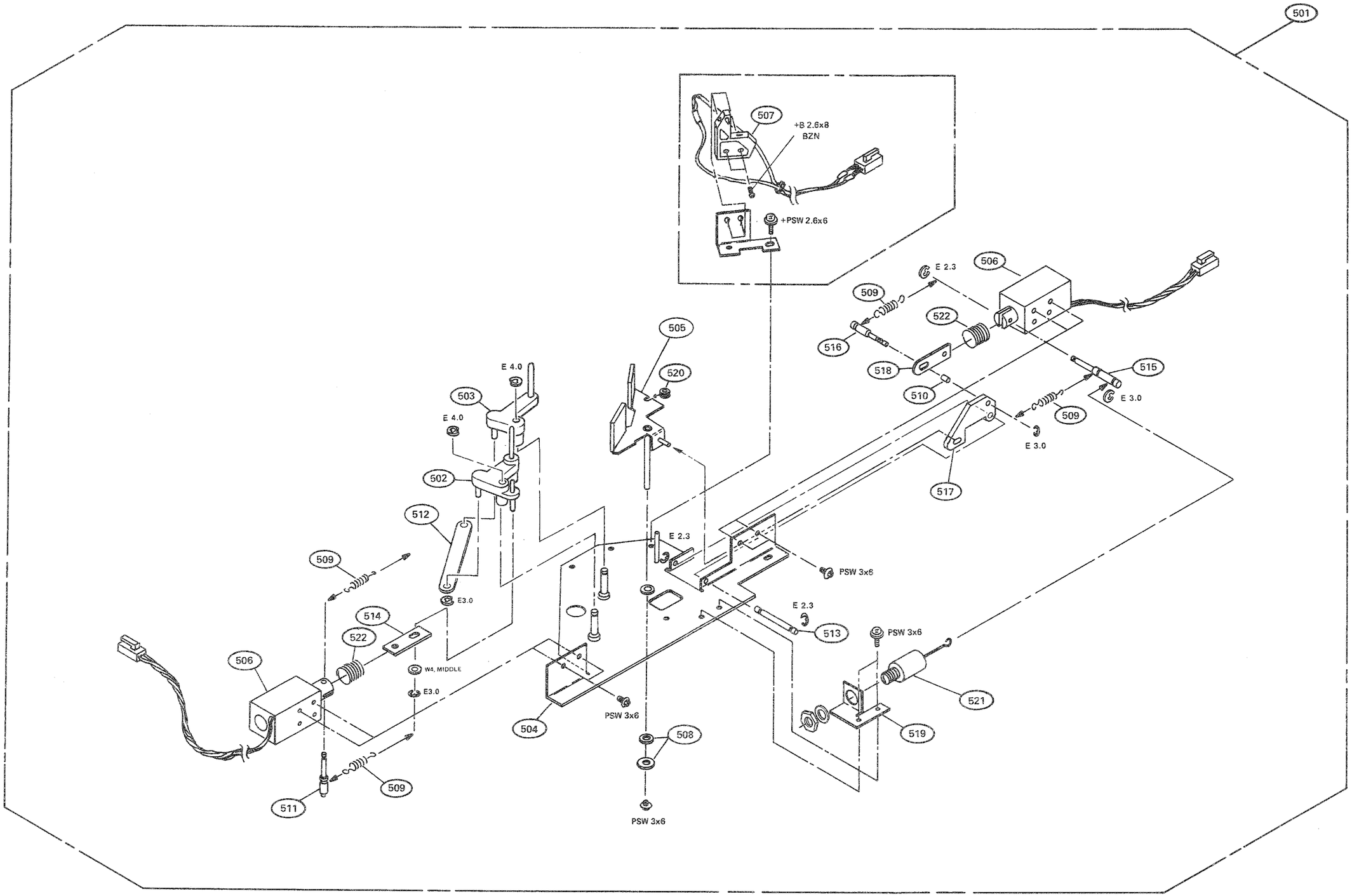

LIFTER & SHIELD ASSY

(APR-5002: Serial No. 20701 and higher
APR-5003V: Serial No. 10001 and higher)

Ref. No.	SP	SONY Parts No.	Description
501	O	A-7810-217-C	LIFTER & SHIELD ASSY
502	O	X-3711-009-1	PLATE (A) ASSY, LIF
503	O	X-3711-010-1	PLATE (B) ASSY, LIF
504	O	X-3711-011-1	BASE PLATE LIF & SHD ASSY
505	O	X-3711-012-3	SHIELD PLATE ASSY
506	S	1-454-426-41	SOLENOID, PLUNGER
507	O	1-937-558-11	HARNESS (EOT-KBD)
508	S	9-911-860-XX	FELT
509	O	3-564-108-00	SPRING, TENSION
510	S	3-659-365-00	SPACER (4x3)
511	O	3-711-115-01	PIN, SOLENOID
512	O	3-711-116-03	PLATE D LIFTER
513	O	3-711-120-01	SHAFT ARM
514	O	3-711-167-01	PLATE C LIFTER
515	O	3-711-220-01	SHAFT, SOLENOID SHIELD
516	O	3-711-221-01	SHAFT, TRANSMISSION SHIELD
517	O	3-711-224-01	ARM SHIELD
518	O	3-711-225-01	LIMITER PLATE SHIELD
519	O	3-711-226-01	BRACKET, AIRPOT SHIELD
520	O	3-711-229-01	BUSHING, SHIELD ASSY
521	O	3-711-282-01	ADJUSTABLE AIR DASHPOT
522	O	3-711-346-01	BRACKET, SOLENOID "A"
523	O	3-711-347-01	BRACKET, SOLENOID "B"
524	O	3-711-348-01	STOPPER PLATE
525	S	4-836-109-00	SPRING, COMPRESSION
526	S	9-911-839-XX	CUSHION, RUBBER

LIFTER & SHIELD ASSY

S/N; APR-5002 20701 AND HIGHER
S/N; APR-5003V 10001 AND HIGHER

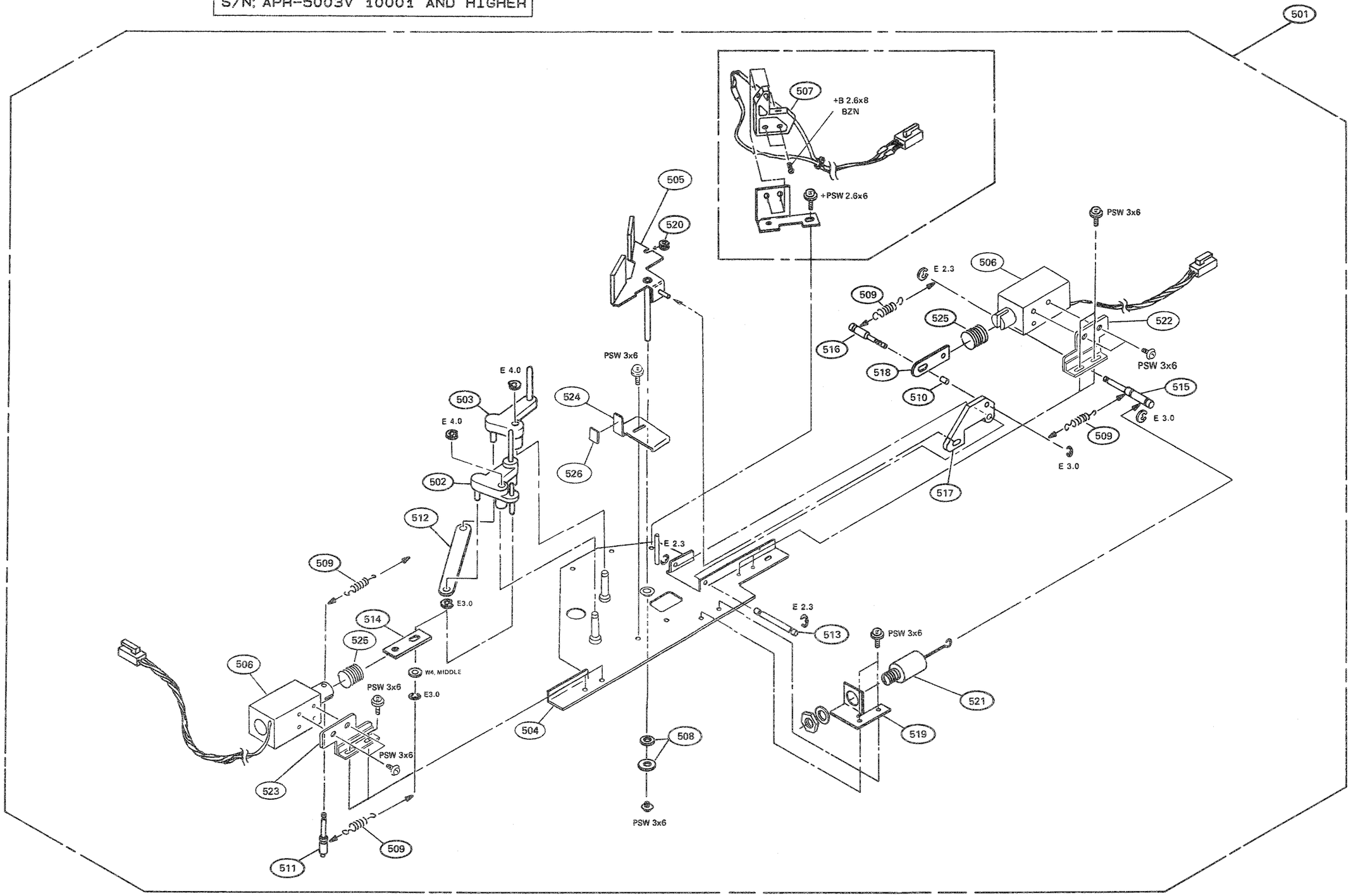

PINCH ROLLER ASSY

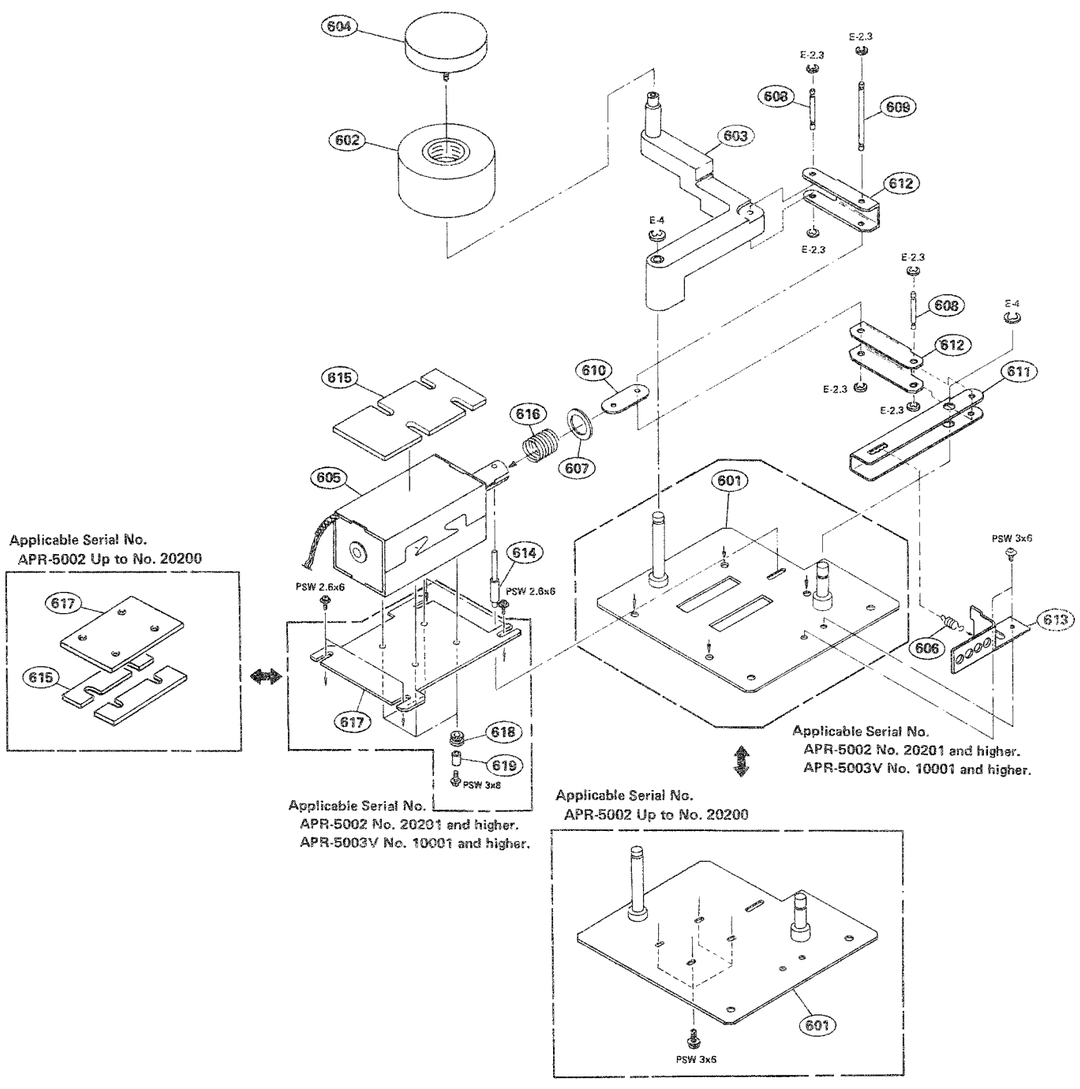

PINCH ROLLER ASSY

Ref. No.	SP	SONY Parts No.	Description
601	O	X-3711-005-2	PINCH BASE PLATE ASSY (APR-5002 Up to No. 20200)
	O	X-3711-005-3	PINCH BASE PLATE ASSY (APR-5002 No. 20201 and higher / APR-5003V No. 10001 and higher)
602	S	X-3711-016-2	ASSY, P/R PUCK
603	O	X-3711-019-1	PINCH LEVER ASSY, ANAL
604	O	X-3711-024-1	CAP, P/R ASSY AN
605	S	1-454-427-11	SOLENOID, PLUNGER
606	S	3-711-328-01	SPRING, TENSION
607	S	3-701-447-21	POLYWASHER, 10 ID
608	S	3-711-004-01	PIN A, P/R
609	S	3-711-005-01	PIN B, P/R
610	O	3-711-006-01	PLATE A, P/R
611	O	3-711-007-01	PLATE B, P/R
612	O	3-711-008-01	PLATE C, P/R
613	O	3-711-009-02	PINCH STOPPER PLATE
614	O	3-711-024-01	PLUNGER GUIDE PIN-P/R
615	O	3-711-205-02	ISOLATOR, RUBBER
616	S	3-711-212-02	SPRING, COMPRESSION
617	O	3-711-311-01	PLUNGER, PLATE (APR-5002 Up to No. 20200)
	O	3-711-327-01	PINCH, PLATE (APR-5002 No. 20201 and higher / APR-5003V No. 10001 and higher)
618	S	3-489-112-00	CUSHION, RUBBER
619	O	3-657-842-01	SPACER, 3x4

CAPSTAN MOTOR ASSY

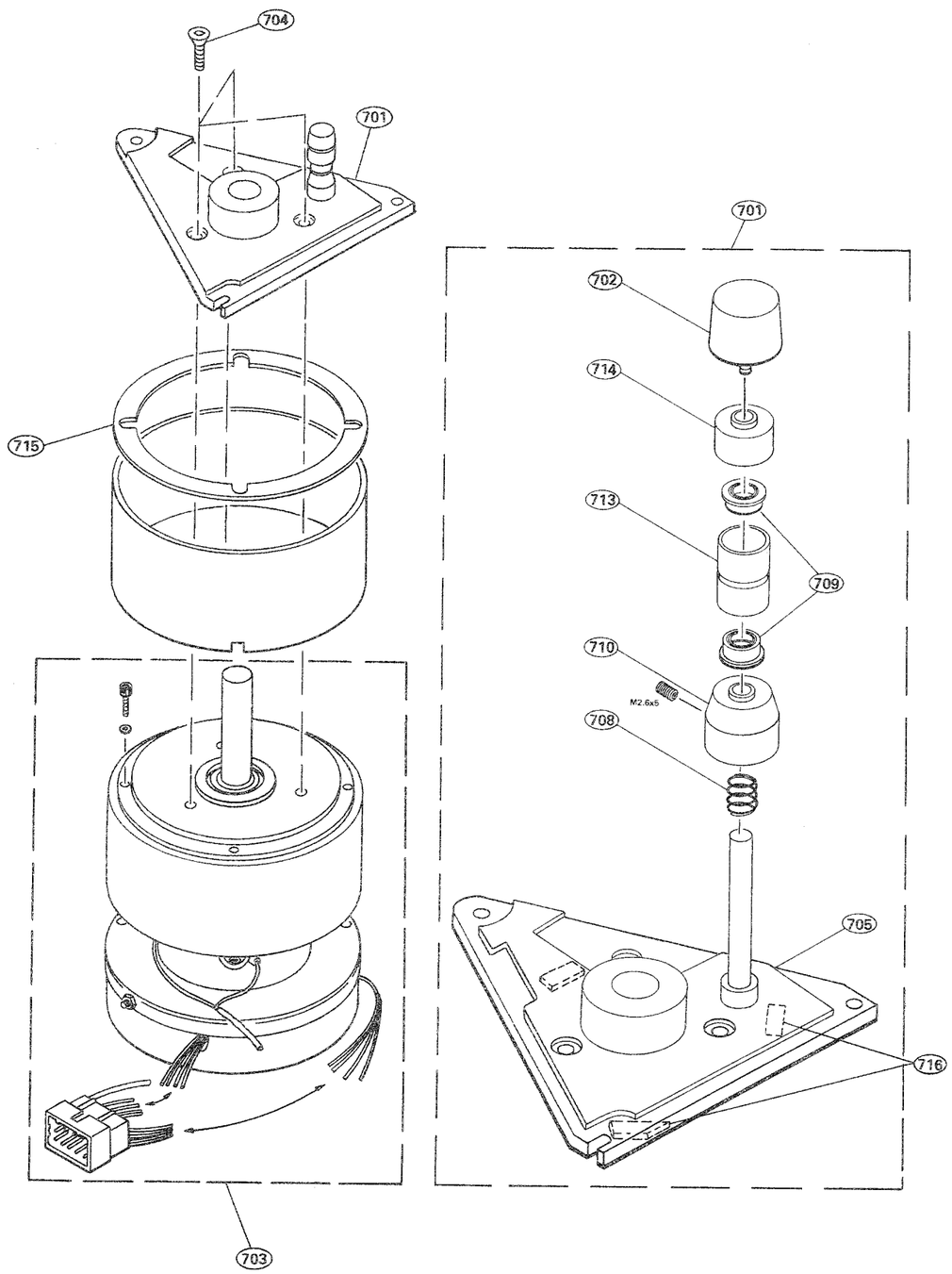

CAPSTAN MOTOR ASSY

701	O	A-7810-219-A	T GUIDE ASSY
702	O	A-7810-220-A	CAP T GUIDE ASSY
703	S	A-7810-265-A	CAPSTAN MOTOR TACH ASSY
704	S	T-9451-528-1	FLAT HEAD 10-32x1/2
705	O	X-3711-023-1	ASSY, CAPSTAN PLATE
708	O	3-663-116-00	SPRING, COMPRESSION
709	S	3-656-932-00	BEARING (FLANGE), BALL
710	O	3-711-081-01	BOTTOM FLANGE,"T" GUIDE
713	O	3-711-277-01	"T" ROLLER
714	O	3-711-278-01	1/4" "T" FLANGE
715	O	3-711-324-01	CAPSTAN SHIELD, UPPER
716	S	4-849-592-00	CUSHION

FUNCTION BLOCK ASSY

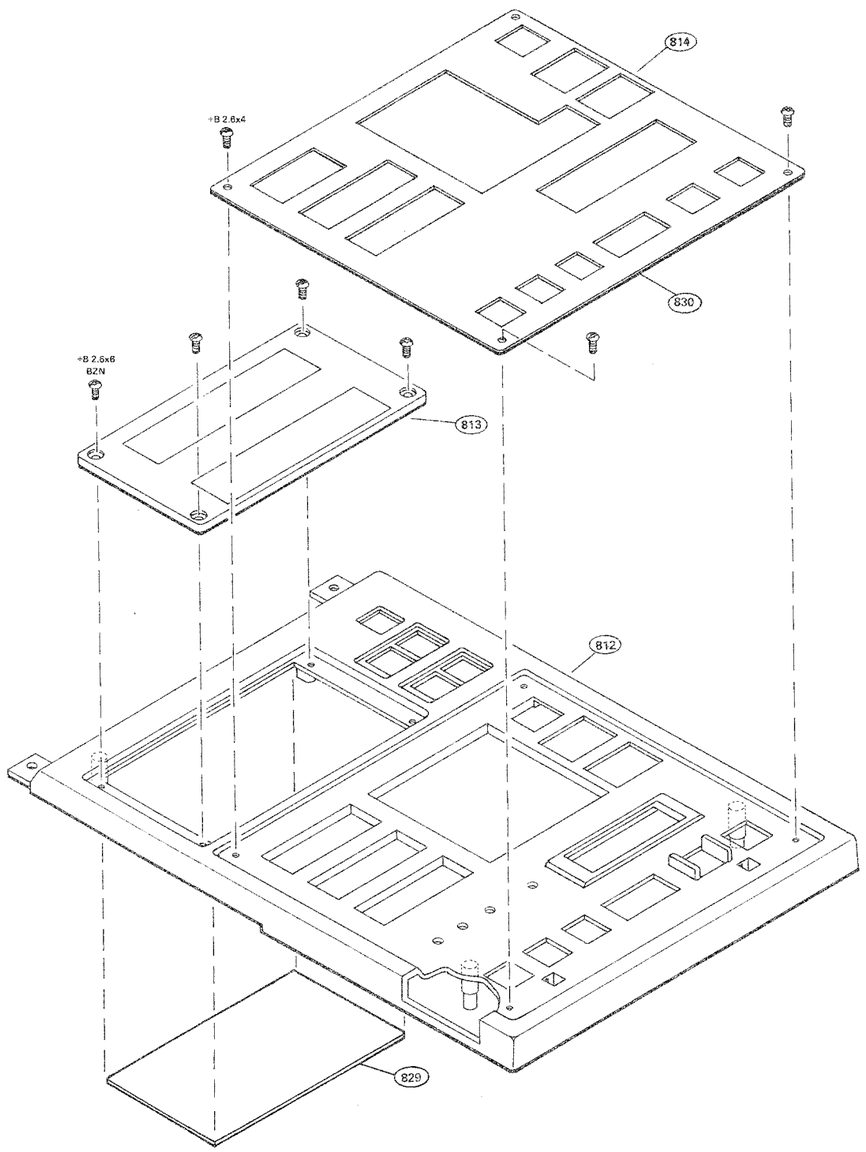

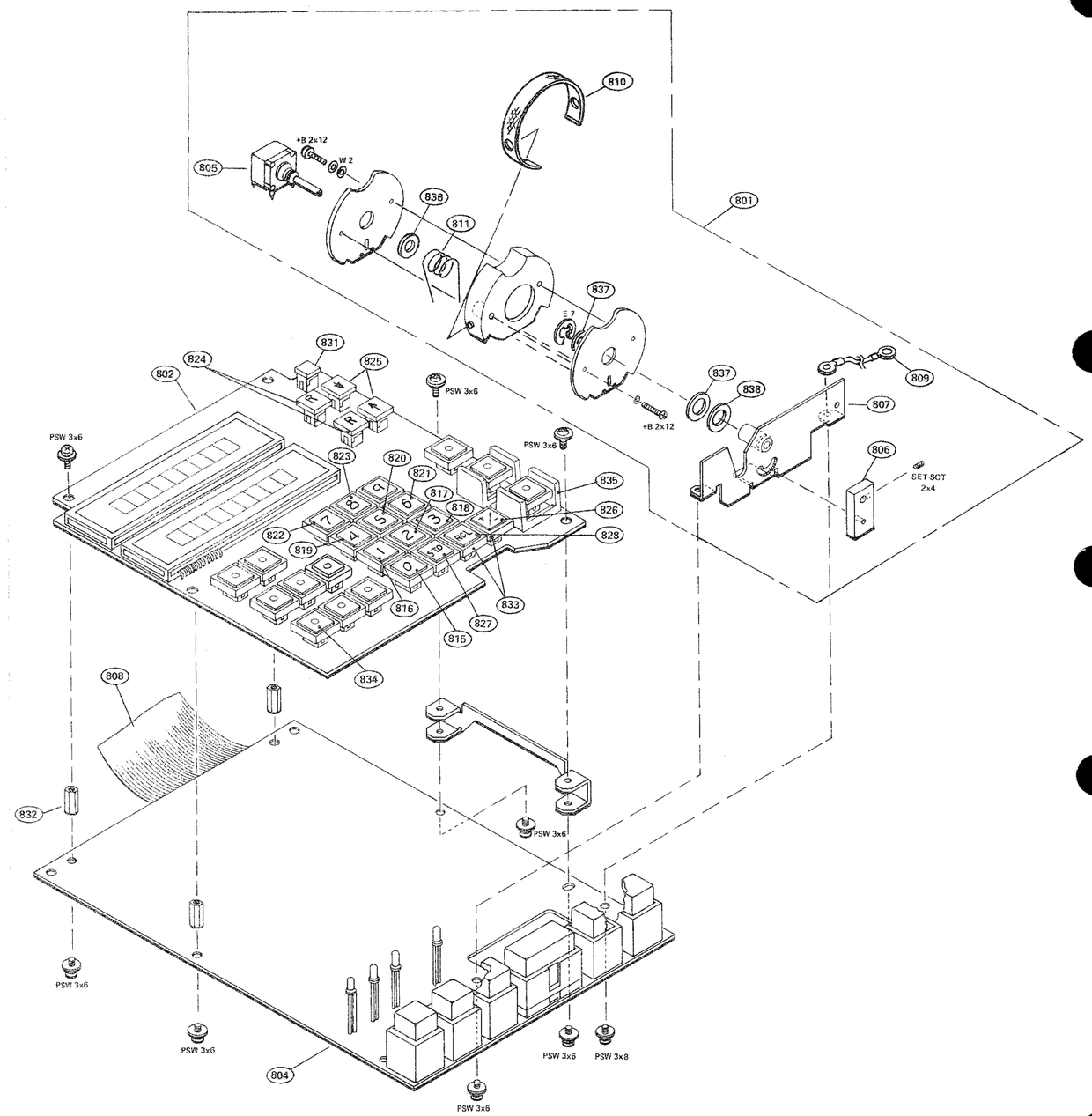

FUNCTION BLOCK ASSY

Ref. No.	SP	SONY Parts No.	Description
801	O	A-7810-223-A	MVC ASSY
802	O	A-7850-352-A	COMPLETE PCB, DSP (For APR-5002A)
	O	A-7850-353-A	COMPLETE PCB, DSP (For APR-5003A)
804	O	A-7850-357-A	MOUNTED PCB, KBD (For APR-5003V)
	O	A-7850-465-A	MOUNTED PCB, KBD (For APR-5002A)
*805	S	T-9411-043-1	PANEL POT (APR-5002 Up to No. 20615)
	S	1-237-681-11	RES, VAR 1K (APR-5002 No. 20616 and higher APR-5003V No. 10001 and higher)
806	O	X-3711-006-1	ROD ASSY
807	O	X-3711-007-1	BASE PLATE ASSY/MVC
808	O	1-937-563-11	HARNESS (CPU-KBD)
809	O	1-937-562-11	HARNESS (ANTI-STATIC)
810	O	3-711-039-01	RUBBER, KNOB
*811	S	3-711-040-01	SPRING TORSION (APR-5002 Up to No. 20615)
	S	3-711-040-02	SPRING TORSION (APR-5002 No. 20616 and higher APR-5003V No. 10001 and higher)
812	O	3-711-042-01	FUNCTION COVER
813	O	3-711-056-01	LENS DISPLAY
814	O	3-711-125-01	COVER COSMETIC TC (For APR-5003V)
815	O	3-711-147-01	KEY CAP (ZERO)
816	O	3-711-148-01	KEY CAP (ONE)
817	O	3-711-149-01	KEY CAP (TWO)
818	O	3-711-150-01	KEY CAP (THREE)
819	O	3-711-151-01	KEY CAP (FOUR)
820	O	3-711-152-01	KEY CAP (FIVE)
821	O	3-711-153-01	KEY CAP (SIX)
822	O	3-711-154-01	KEY CAP (SEVEN)
823	O	3-711-155-01	KEY CAP (EIGHT)
824	O	3-711-156-01	KEY CAP (R)
825	O	3-711-157-01	KEY CAP (ARROW)
826	O	3-711-158-01	KEY CAP (PLUS/MINUS)
827	O	3-711-159-01	KEY CAP (STO)
828	O	3-711-160-01	KEY CAP (RCL)
829	O	3-711-171-01	FILTER, POLARIZING
830	O	3-711-233-01	COVER COSMETIC APR (For APR-5002A)
831	O	3-711-301-01	KEY TOP (WINDOW)
832	O	4-360-293-00	SPACER, BOSS
833	S	4-903-740-01	FRAME, FITTING (SQUARE 10)
834	O	4-903-741-21	KEY TOP (SQUARE 10)
835	O	4-903-747-01	GUARD, SWITCH
836	S	7-623-928-11	WASHER 8, NYLON
837	S	3-701-446-11	WASHER 8, T=0.25
838	S	3-701-446-21	WASHER 8, T=0.5

NOTE: The above parts marked * must be replaced with each other.

"T" MOTOR AND BRAKE ASSY

Ref. No.	SP	SONY Parts No.	Description
901	O	A-7810-204-A	T-REEL BRAKE ASSY
902	O	A-7810-205-A	HUB ASSY
903	O	A-7850-349-A	MOUNTED PCB, RTS-1
904	S	T-9452-179-1	SCREW, 6-32x3/8 SKT CAP
905	S	T-9481-731-1	T-REEL MOTOR ASSY
906	S	X-3673-601-0	BAND ASSY, BRAKE
907	O	X-3711-002-1	ASSY, PLATE MTG-T REEL
908	O	X-3711-003-2	ASSY, CONNECTOR PLATE
909	S	1-454-426-41	SOLENOID PLUNGER
910	O	1-937-532-11	HARNESS (RTS-TIB(R))
911	S	3-426-140-01	SPRING, TENSION
912	O	3-673-810-00	PIN, SOLENOID
913	O	3-711-016-02	NUT PLATE SHIELD
914	O	3-711-018-01	STAND OFF BRAKE BND GUIDE
915	O	3-711-022-02	BRACKET, BRAKE SOLENOID (T)
916	O	3-711-058-01	STAND OFF, RTS
917	S	3-711-185-01	REEL SHIM
918	S	4-836-109-00	SPRING, COMPRESSION
919	S	T-9451-550-1	SPRING WASHER 8

"S" MOTOR AND BRAKE ASSY

920	O	A-7810-207-A	S-REEL BRAKE ASSY
921	S	T-9481-730-1	S-REEL MOTOR ASSY
*922	O	X-3711-008-1	ASSY, PLATE MTG-S REEL
923	O	1-937-539-11	HARNESS (RTS-TIB (L))
924	O	3-711-021-02	BRACKET, BRAKE SOLENOID(S)

* The shape of the S reel plate is a mirror image of that of the T reel plate which is illustrated in the exploded view.

REEL MOTOR AND BRAKE ASSY

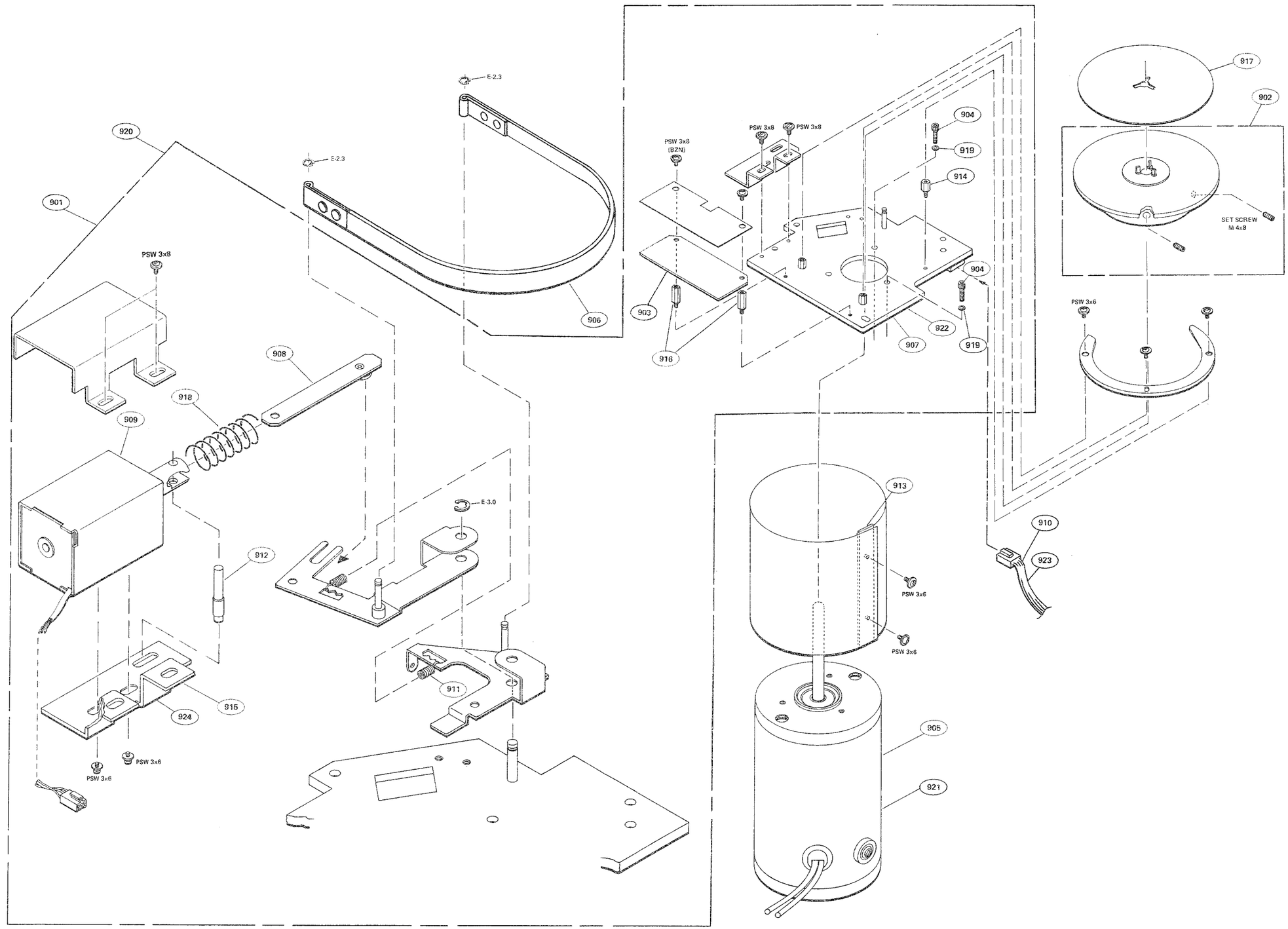

MECHA CHASSIS ASSY

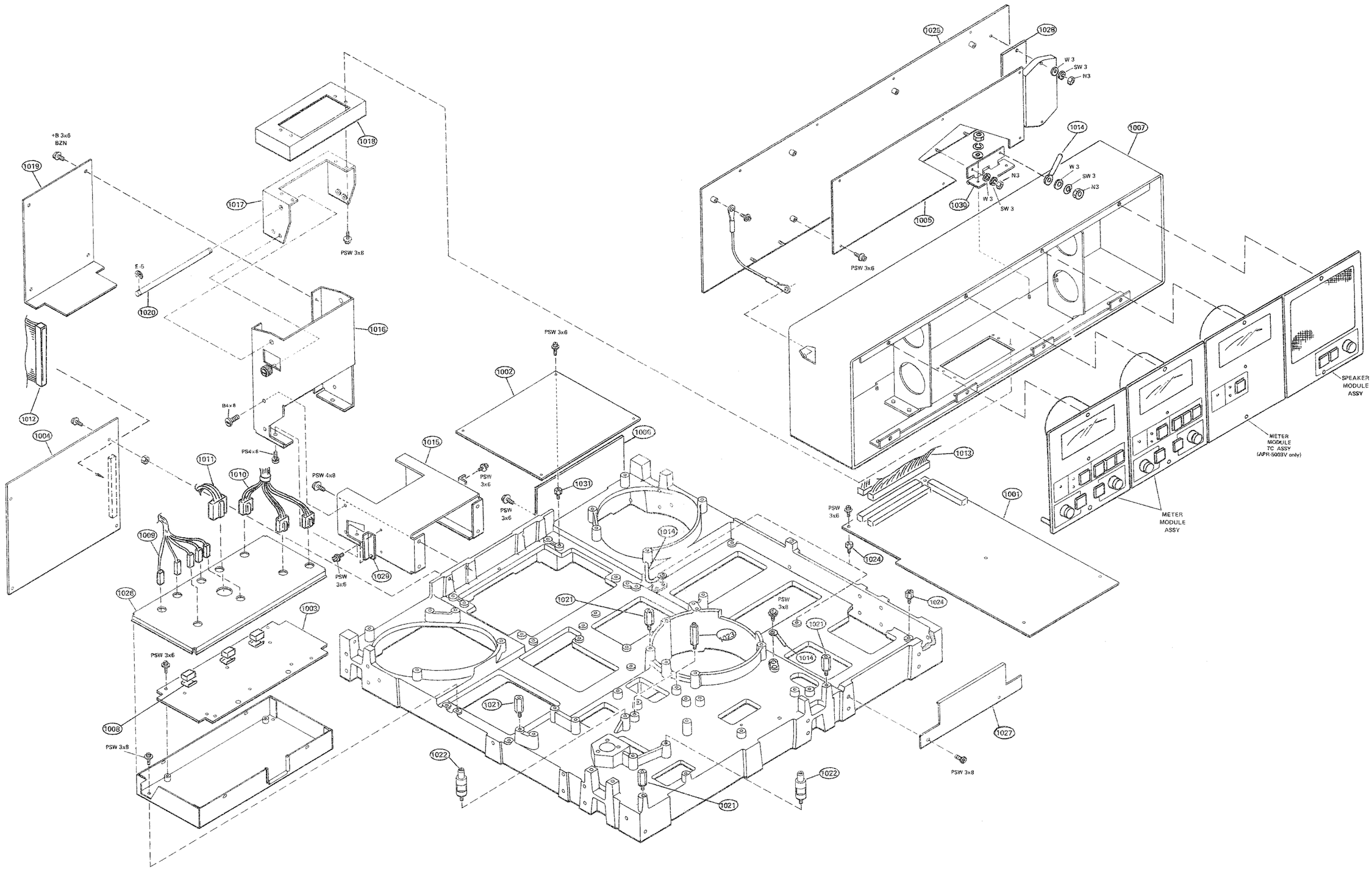

MECHA CHASSIS ASSY

Ref. No.	SP	SONY Parts No.	Description
1001	O	A-7850-358-A	COMPLETE PCB, CPU (For APR-5002A)
	O	A-7850-736-A	COMPLETE PCB, CPU (For APR-5003V)
1002	O	A-7850-362-A	COMPLETE PCB, TIB
1003	O	A-7850-364-A	COMPLETE PCB, FEX
1004	O	A-7850-366-A	COMPLETE PCB, LNT
1005	O	A-7850-370-A	COMPLETE PCB, ACM
1006	O	T-9482-436-1 (A-7850-626-A)	COMPLETE PCB, VVT (For APR-5003V)
1007	O	X-3711-013-2	ENCLOSURE ASSY
1008	O	X-3711-026-1	ASSY SHIELD TRANSFORMER
1009	O	1-937-530-11	HARNESS (BIAS/ER/REC SUB)
1010	O	1-937-531-11	HARNESS (SYNC SUB)
1011	O	1-937-533-11	HARNESS (RELAY CONTROL)
1012	O	1-937-535-11	HARNESS (CPU-LNT)
1013	O	1-937-536-11	HARNESS (CPU-TIB)
1014	O	3-703-150-11	CLAMP
1015	O	3-711-043-02	SUPPORT, NECK
1016	O	3-711-044-02	NECK, MONITOR HOUSING
1017	O	3-711-045-01	YOKE, WELDMENT
1018	O	3-711-046-03	SKIRT, MONITOR HOUSING
1019	O	3-711-047-01	COVER, REAR
1020	O	3-711-048-01	SHAFT
1021	O	3-711-050-01	STANDOFF, COVER TOP
1022	O	3-711-106-01	STANDOFF HEAD BLOCK
1023	O	3-711-107-01	STANDOFF CONNECTOR
1024	O	3-711-128-02	STANDOFF 5MM
1025	O	3-711-135-02	PANEL, REAR
1026	O	3-711-161-03	COVER, SHIELD, FEX
1027	O	3-711-202-01 (APR-5002: Serial No. 20001 to 20700 only)	BRACKET, FUNC
1028	O	3-711-241-01	INSULATOR, AMPLIFIER
1029	O	3-711-253-01	COVER, NECK SUPPORT
1030	O	3-711-283-12	HINGE (B-1100 SERIES)
1031	O	3-880-616-00	BOSS

AMP CASE AND ALIGNMENT CTL PANEL ASSY

(APR-5002: Serial No. 20001 to 20700)

Ref. No.	SP	SONY Parts No.	Description
1101	O	A-7850-336-A	MOUNTED PCB, ALN
1102	S	X-3642-018-3	HANDLE ASSY
1103	S	3-426-136-01	SPRING, TENSION
1104	O	3-621-212-31	CLAMP, DKN
1105	S	3-642-656-01	FOOT
1106	O	3-654-058-11	SPACER (3x2)
1107	O	3-657-842-11	SPACER (3x7)
1108	O	3-673-676-21	RAIL, PC BOARD GUIDE
1109	O	3-711-093-01	STAY (LEFT)
1110	O	3-711-095-01	STAY (RIGHT)
1111	O	3-711-100-02	STANDOFF
1112	O	3-711-101-01	COVER, DISPLAY
1113	O	3-711-102-01	RETAINER, CARD
1114	O	3-711-103-01	PANEL, TOP
1115	O	3-711-104-01	COVER, FRONT
1116	O	3-711-105-01	FRAME, POWER SWITCH
1117	O	3-711-186-01	SPACER FOOT
1118	O	3-711-198-01	COVER, CONNECTOR
1119	O	3-711-199-01	FILTER, POLARIZING
1120	O	3-711-203-01	PIN-BASE SUPPORT
1121	O	3-711-271-11	STAY (LEFT)
1122	O	3-711-272-01	LATCH BALL
1123	O	3-711-272-11	LATCH, BALL
1124	O	3-711-283-02	HINGE (B-1100 SERIES)
1125	O	3-711-110-01	SUPPORT, BOTTOM REAR
1126	O	3-711-079-02	SUPPORT, BOTTOM FRONT

 AMP CASE AND ALIGNMENT CTL PANEL ASSY

AMP CASE AND ALIGNMENT CTL PANEL ASSY

S/N; APR-5002 20001 TO 20700

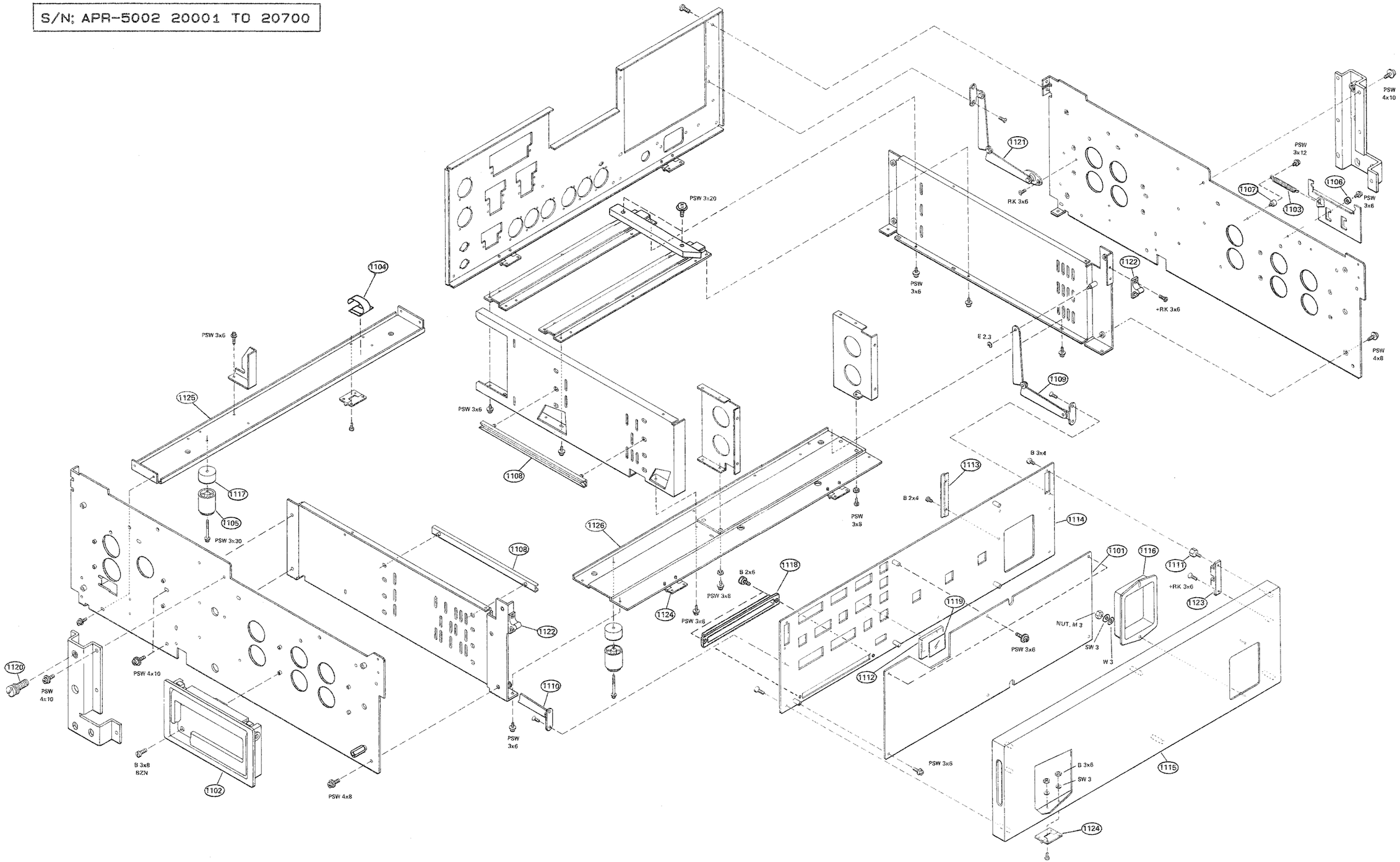

AMP CASE AND ALIGNMENT CTL PANEL ASSY

(APR-5002: Serial No. 20701 and higher
APR-5003V: Serial No. 10001 and higher)

Ref. No.	SP	SONY Parts No.	Description
1101	O	A-7850-336-A	MOUNTED PCB, ALN
1102	S	X-3642-018-0	HANDLE ASSY
1103	S	3-426-136-01	SPRING, TENSION
1104	O	3-621-212-31	CLAMP, DKN
1105	S	3-642-656-01	FOOT
1106	O	3-654-058-11	SPACER (3x2)
1107	O	3-673-676-21	RAIL, PC BOARD GUIDE
1108	O	3-711-093-01	STAY (LEFT)
1109	O	3-711-095-01	STAY (RIGHT)
1110	S	3-711-100-02	STANDOFF
1111	O	3-711-101-01	COVER, DISPLAY
1112	O	3-711-102-01	RETAINER, CARD
1113	O	3-711-103-01	PANEL, TOP
1114	O	3-711-104-01	COVER, FRONT
1115	O	3-711-105-01	FRAME, POWER SWITCH
1116	O	3-711-186-02	SPACER FOOT
1117	O	3-711-198-01	COVER, CONNECTOR
1118	O	3-711-199-01	FILTER, POLARIZING
1119	O	3-711-203-01	PIN-BASE SUPPORT
1120	O	3-711-271-11	STAY (LEFT)
1121	O	3-711-272-01	LATCH BALL
1122	O	3-711-272-11	LATCH, BALL
1123	O	3-711-283-02	HINGE (B-1100 SERIES)

 AMP CASE AND ALIGNMENT CTL PANEL ASSY

AMP CASE AND ALIGNMENT CTL PANEL ASSY

S/N: APR-5002 20701 AND HIGHER
S/N: APR-5003V 10001 AND HIGHER

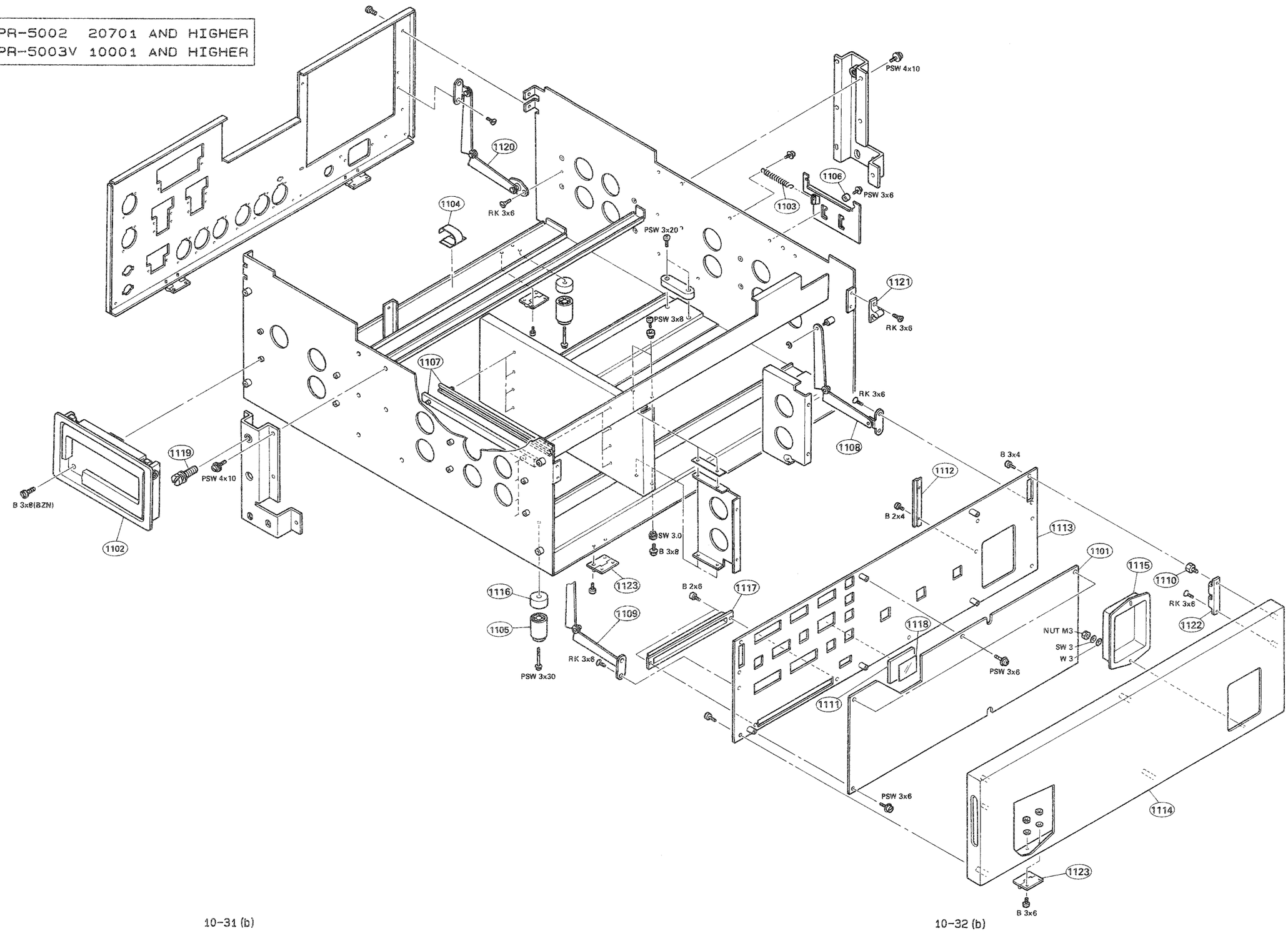

COSMETIC COVER BLOCK

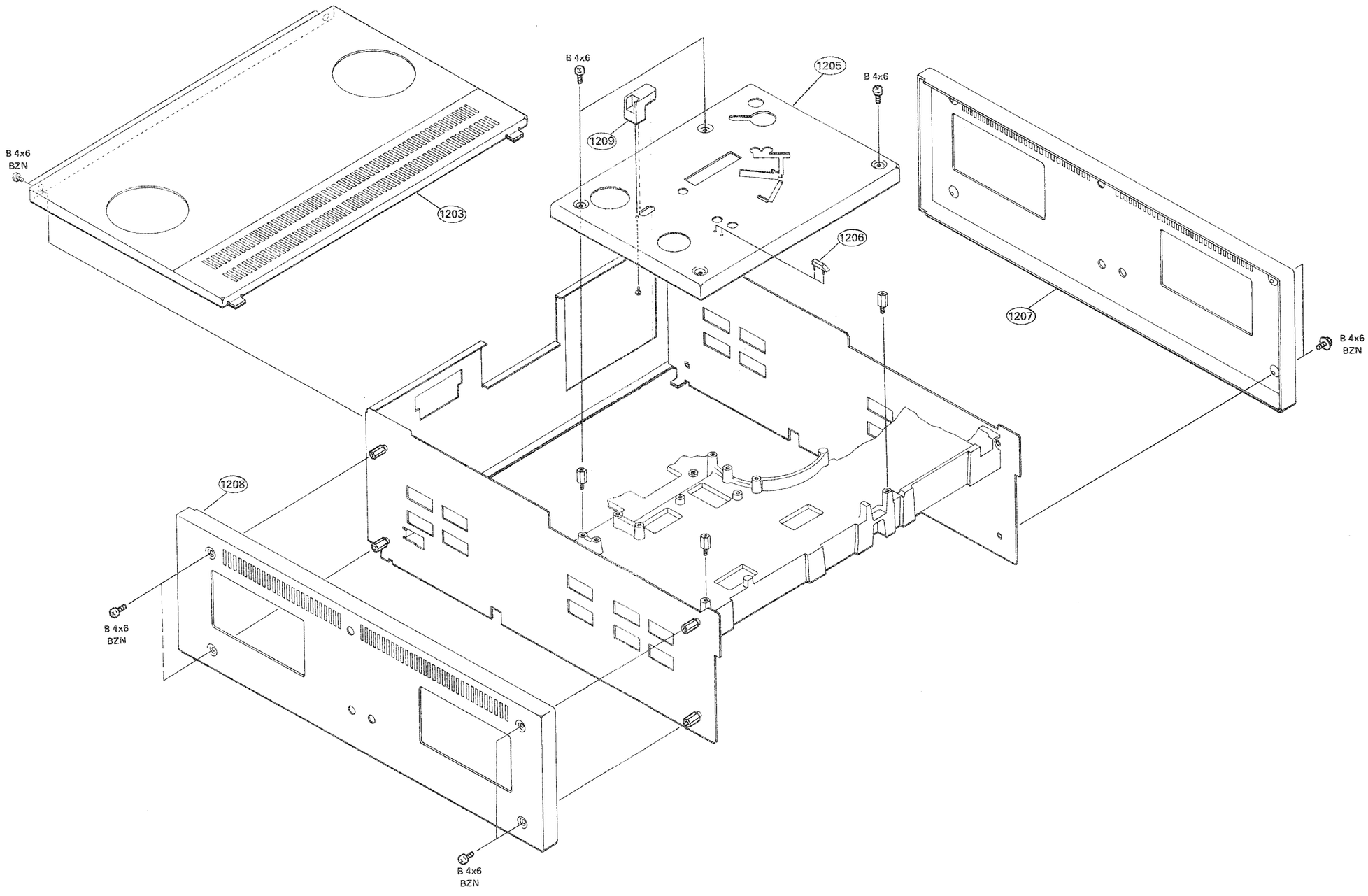

FRONT ARM ASSY

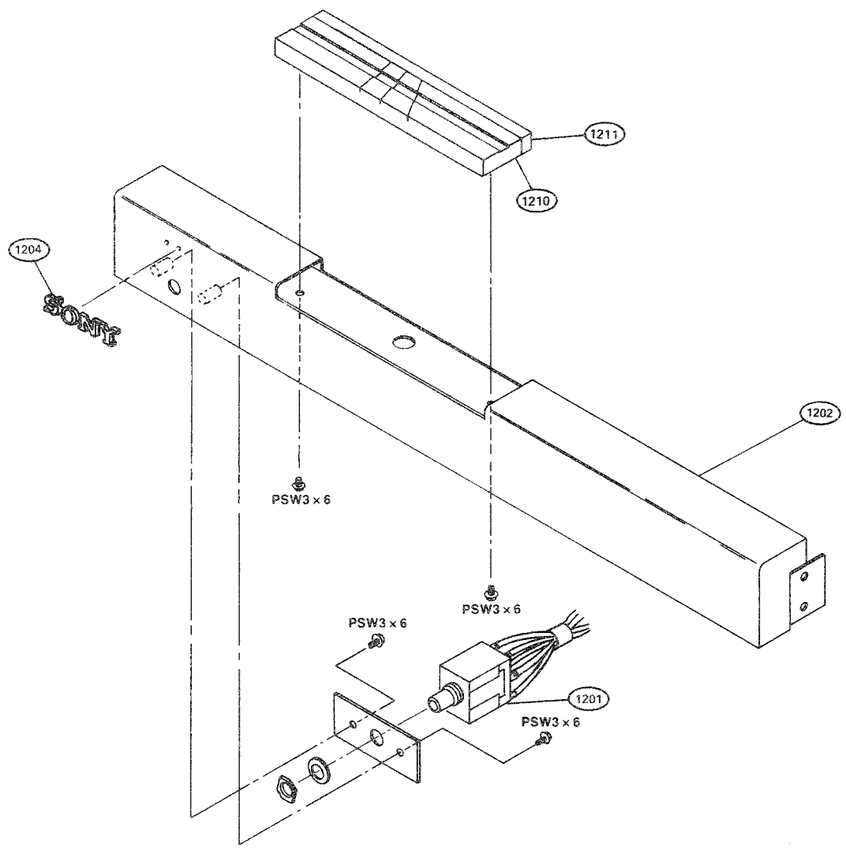

COSMETIC COVER BLOCK AND FRONT ARM ASSY

Ref. No.	SP	SONY Parts No.	Description
1201	S	T-9413-284-1	HEADPHONE JACK 3FP
1202	O	X-3711-015-1	FRONT ARM, ASSY
1203	S	X-3711-025-1	COVER, TOP REAR (A) ASSY
1204	O	3-672-268-00	EMBLEM, SONY
1205	O	3-711-129-02	COVER, TOP FRONT
1206	O	3-711-145-01	TAPE, STOPPER
1207	O	3-711-262-02	COVER, COSMETIC R.H
1208	O	3-711-263-02	COVER, COSMETIC L.H
1209	O	3-711-273-01	GUARD, TENSION ARM
1210	S	T-9451-971-2	SPLICE BLOCK ANALOG
1211	O	3-711-190-01	STOP PLATE SPLICE BLOCK

AMP CASE AND CHASSIS ASSY

S/N: APR-5002 20001 TO 20700

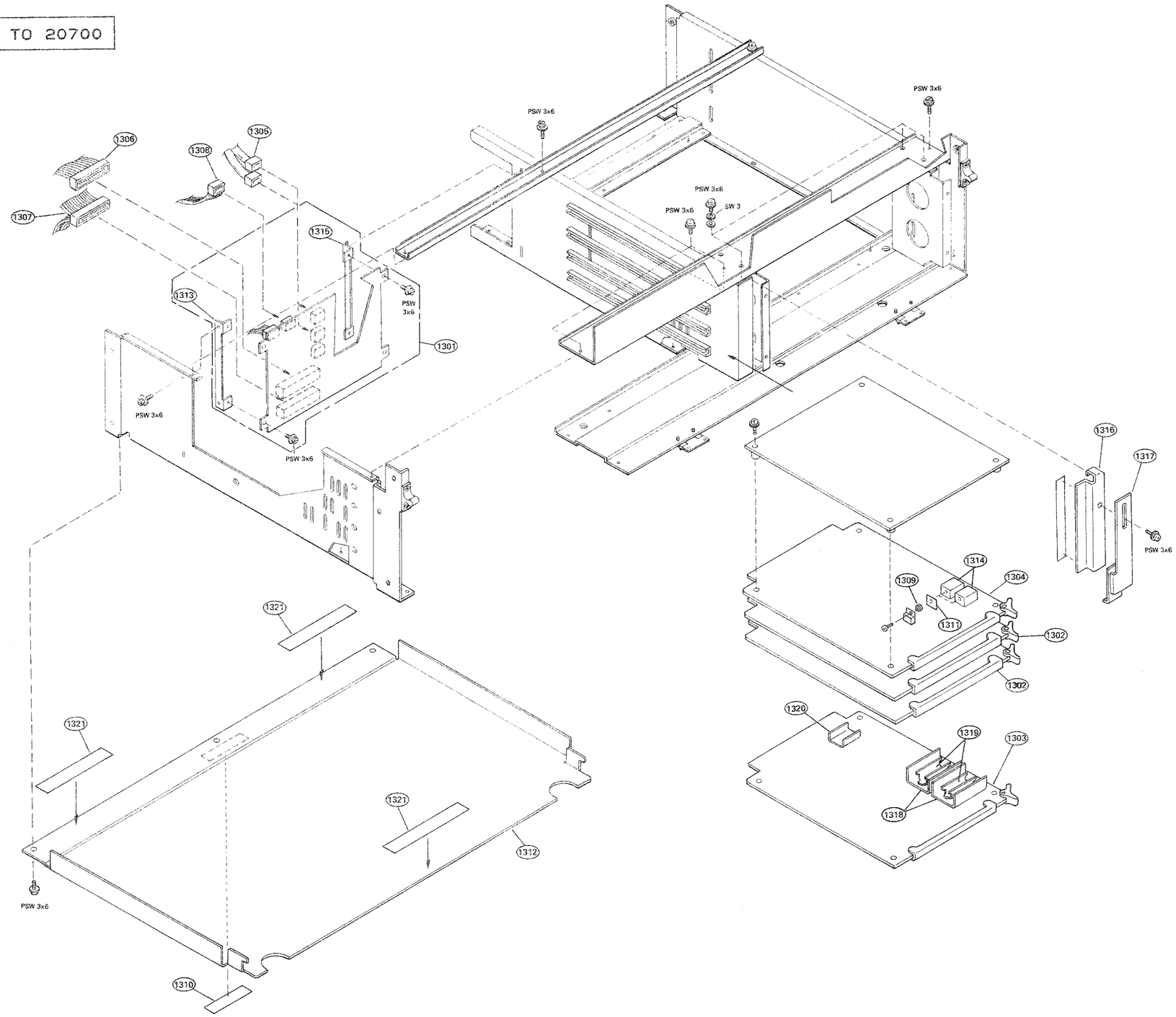

AMP CASE AND CHASSIS ASSY

(APR-5002: Serial No. 20001 to 20700)

Ref. No.	SP	SONY Parts No.	Description
1301	O	A-7810-195-A	COMPLETE PCB, ADM
1302	O	A-7850-373-A	COMPLETE PCB, CNL
1303	O	A-7850-376-A	COMPLETE PCB, MST
1304	O	A-7850-378-A	COMPLETE PCB, TCC (For APR-5003A)
1305	O	1-937-529-11	HARNESS (I/O UNCAL SUB)
1306	O	1-937-534-11	HARNESS (PROCESSER INTRFC)
1307	O	1-937-537-11	HARNESS (LOGIC INTER CONNECT)
1308	O	1-937-538-11	HARNESS (METER & CH STATUS)
1309	O	2-832-007-03	BUSHING, (K) INSULATING
1310	S	3-703-079-31	LABEL, CAUTION (BACK)
1311	O	3-703-207-11	INSULATOR, TO-220
1312	O	3-711-082-02	BOTTOM COVER APR
1313	O	3-711-099-02	MOUNTING BRACKET M.B.
1314	O	3-711-196-02	HEAT SINK, TR
1315	O	3-711-201-01	BRACKET (R) MTB
1316	O	3-711-314-01	HOLDER, CARD BD (A)
1317	O	3-711-315-01	HOLDER, CARD BD (B)
1318	O	3-711-319-01	HEAT SINK (A), MST
1319	O	3-711-320-01	HEAT SINK (B), MST
1320	O	3-711-326-01	HEAT SINK (C), MST
1321	S	3-837-974-00	CUSHION (B)

AMP CASE AND CHASSIS ASSY

(APR-5002: Serial No. 20701 and higher
APR-5003V: Serial No. 10001 and higher)

Ref. No.	SP	SONY Parts No.	Description
1301	O	A-7810-195-A	COMPLETE PCB, ADM
1302	O	A-7850-373-A	COMPLETE PCB, CNL
1303	O	A-7850-376-A	COMPLETE PCB, MST
1304	O	A-7850-378-A	COMPLETE PCB, TCC (For APR-5003A)
1305	O	1-937-529-11	HARNESS (I/O UNCAL SUB)
1306	O	1-937-534-11	HARNESS (PROCESSER INTRFC)
1307	O	1-937-537-11	HARNESS (LOGIC INTER CONNECT)
1308	O	1-937-538-11	HARNESS (METER & CH STATUS)
1309	S	2-832-007-00	BUSHING, (K) INSULATING
1310	S	3-703-207-11	INSULATOR, TO-220
1311	O	3-711-082-02	BOTTOM COVER APR
1312	O	3-711-099-02	MOUNTING BRACKET M.B.
1313	O	3-711-196-02	HEAT SINK, TR
1314	O	3-711-201-01	BRACKET (R) MTB
1315	O	3-711-344-01	HOLDER, CARD BD
1316	O	3-711-319-03	HEAT SINK (A), MST
1317	O	3-711-326-01	HEAT SINK (C), MST

METER MODULE ASSY (MONITOR HOUSING ASSY)

Ref. No.	SP	SONY Parts No.	Description
1401	O	A-7810-224-A	METER MODULE ASSY
1402	O	A-7850-368-A	MOUNTED PCB, CTM
1403	S	T-9412-212-1	METER, VU WS-220
1404	S	T-9412-216-1	LAMP ML7352
1405	S	1-237-945-11	RES, VAR, CARBON, 5K, AUDIO
1406	O	1-564-792-11	WAFER ASSY 5P
1407	O	1-937-553-11	HARNESS (METER CONTROL)
1408	O	1-937-554-12	HARNESS (METER INPUT)
1409	O	2-280-622-11	SUPPORT (M3), HEXAGON
1410	O	3-157-917-00	SUPPORT (B) PC BOARD
1411	O	3-711-014-21	KNOB
1412	O	3-711-139-01	PANEL, METER

AMP CASE AND CHASSIS ASSY

S/N; APR-5002 20701 AND HIGHER
S/N; APR-5003V 10001 AND HIGHER

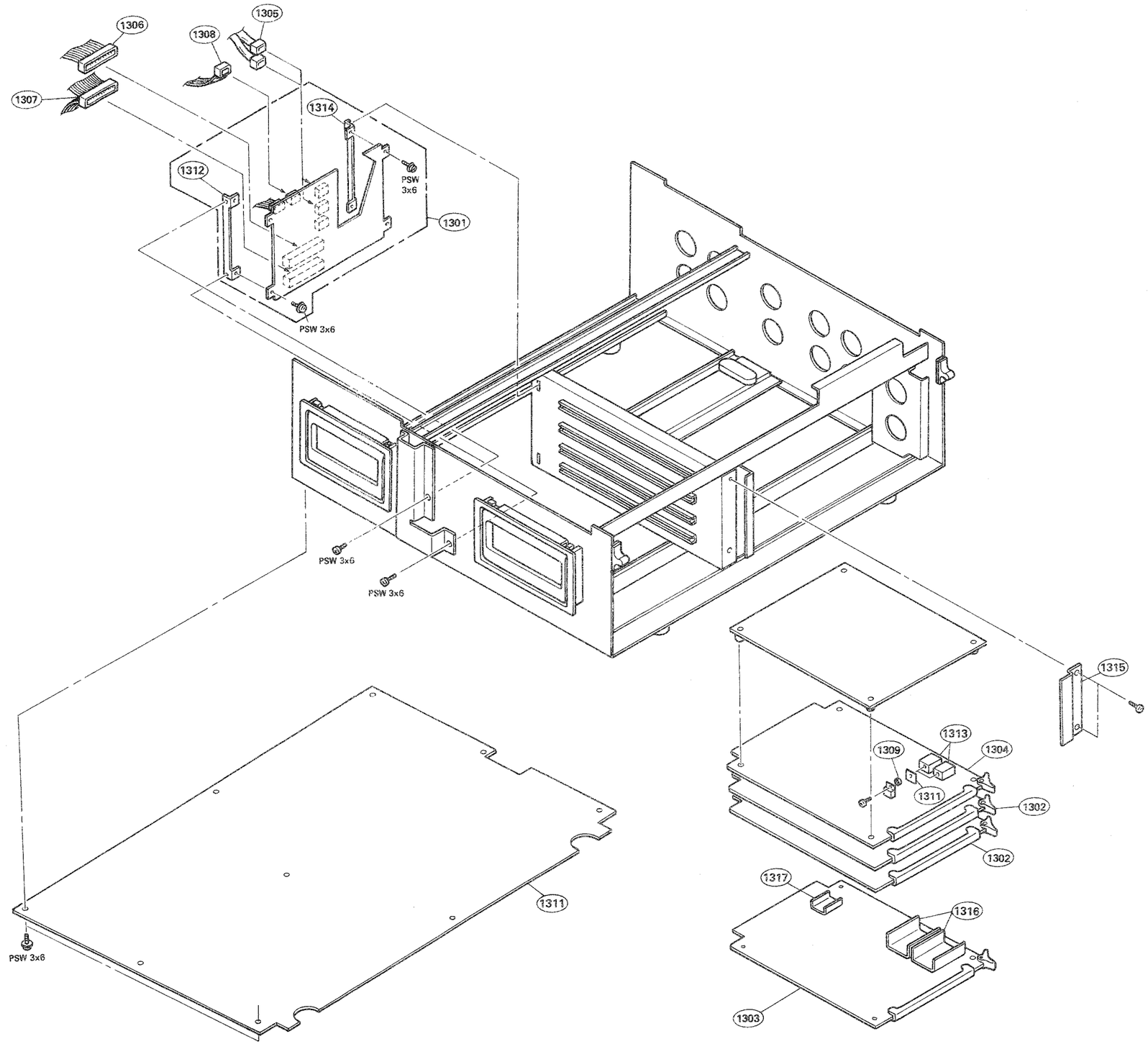

10-37 (b)

10-38 (b)

METER MODULE ASSY

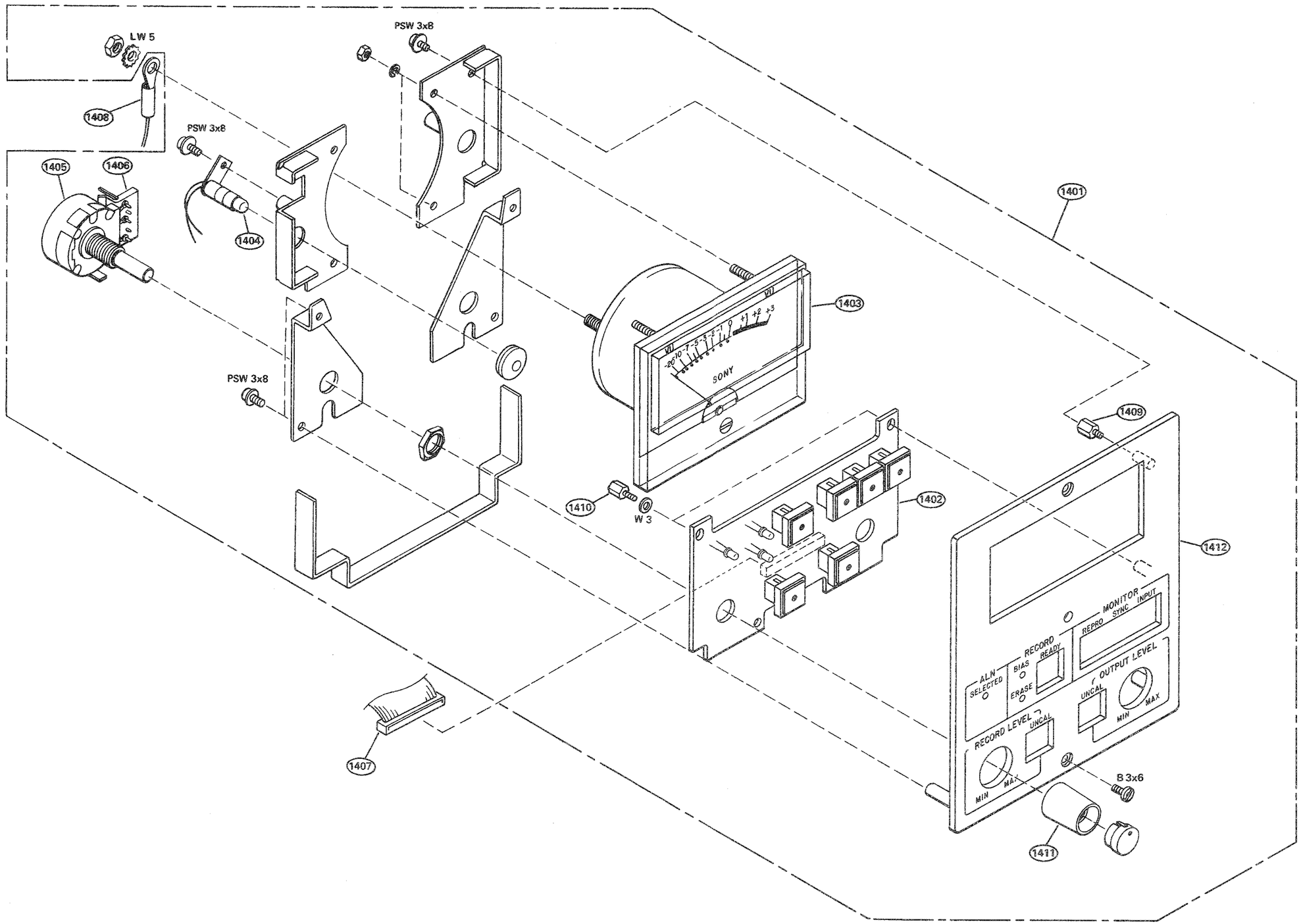

METER MODULE TC ASSY (APR-5003A)

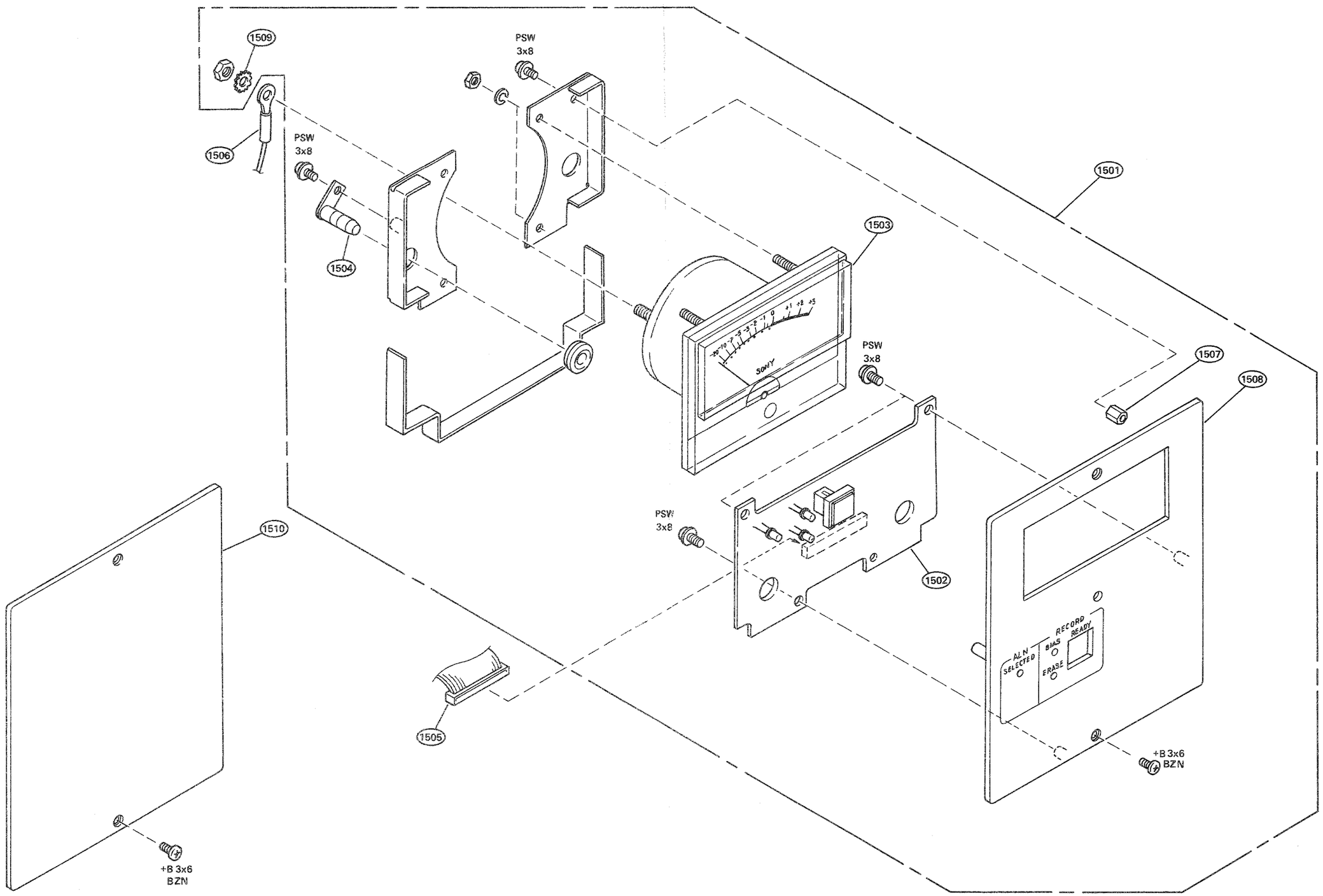

METER MODULE TC ASSY (MONITOR HOUSING ASSY)
(For APR-5003V)

Ref. No.	SP	SONY Parts No.	Description
1501	O	A-7810-226-A	METER MODULE TC ASSY
1502	O	A-7850-372-A	MOUNTED PCB, TCM
1503	S	T-9412-212-1	METER, VU WS-220
1504	S	T-9412-216-1	LAMP ML 7352
1505	O	1-937-553-11	HARNESS (METER CONTROL)
1506	O	1-937-554-12	HARNESS (METER INPUT)
1507	O	2-280-622-11	SUPPORT (M3), HEXAGON
1508	O	3-711-141-01	PANEL, METER, TC
1509	S	7-623-424-07	LW5, TYPE B
1510	O	3-711-136-01	PANEL, BLANK (For APR-5002A)

SPEAKER MODULE ASSY (MONITOR HOUSING ASSY)

Ref. No.	SP	SONY Parts No.	Description
1601	S	1-237-946-11	RES, VAR, CARBON, 5K/5K, AUDIO
1602	S	1-503-291-00	SPEAKER
1603	O	1-619-159-11	PC BOARD, MSB
1604	O	1-937-552-11	HARNESS (MUTE SWITCHING)
1605	O	1-937-555-11	HARNESS (SPEAKER)
1606	O	1-937-556-11	HARNESS (MONITOR ATTEN)
1607	O	2-280-622-11	SUPPORT (M3), HEXAGON
1608	O	3-711-014-21	KNOB
1609	O	3-711-137-01	GRILLE, SPEAKER
1610	O	3-711-138-01	PANEL, SPEAKER

SPEAKER MODULE ASSY

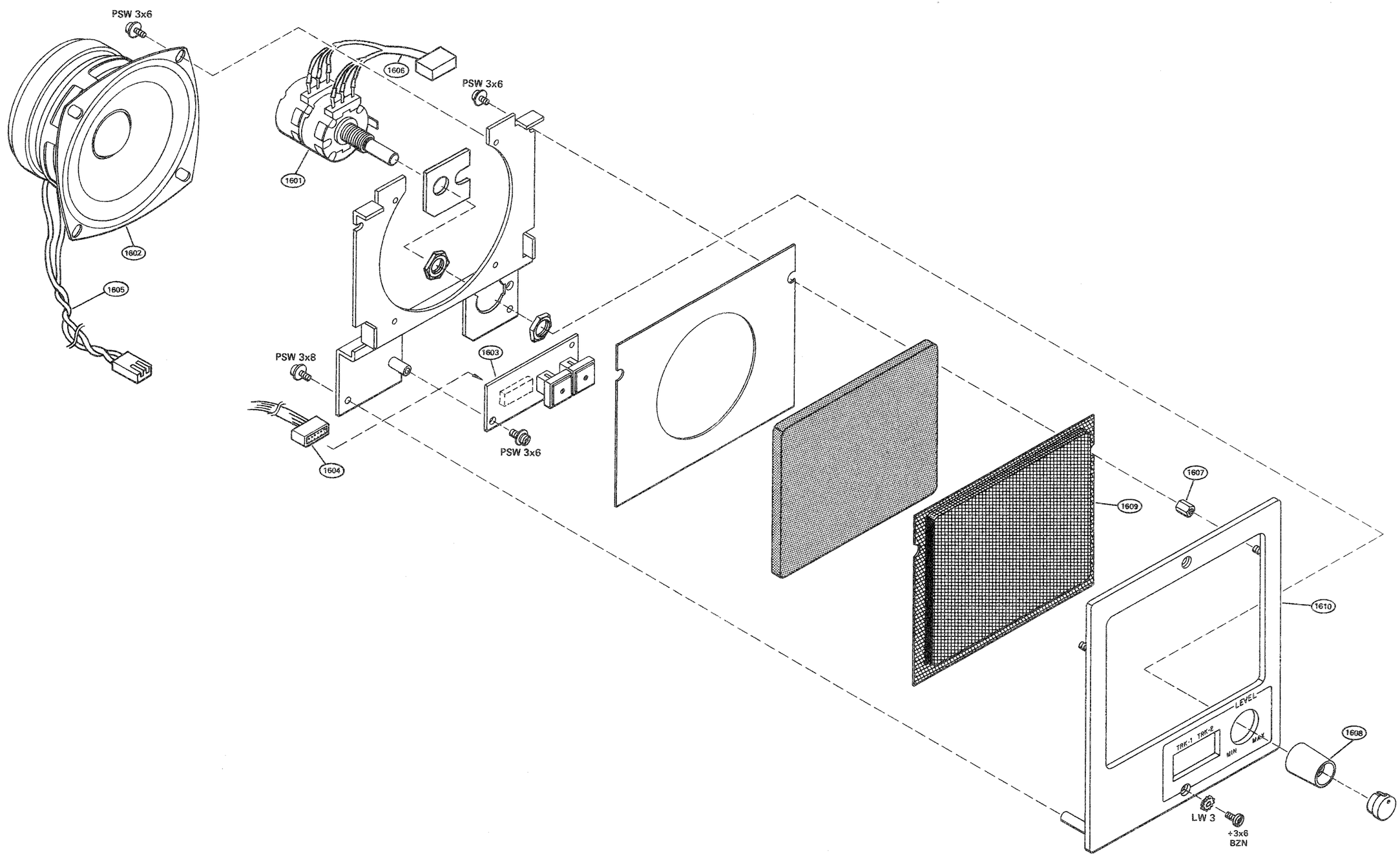

REAR PANEL ASSY (For APR-5002)

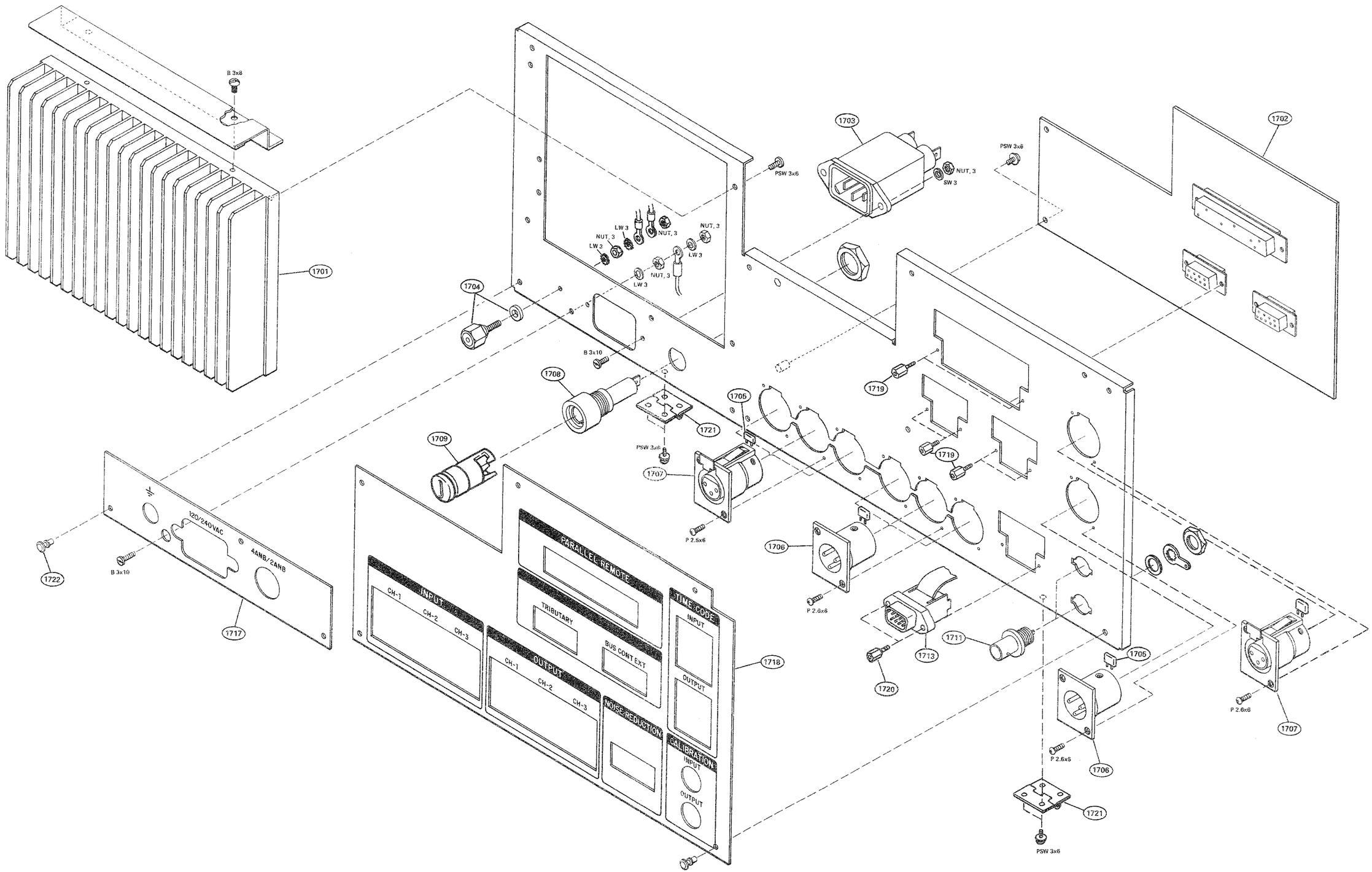

REAR PANEL ASSY (For APR-5002)

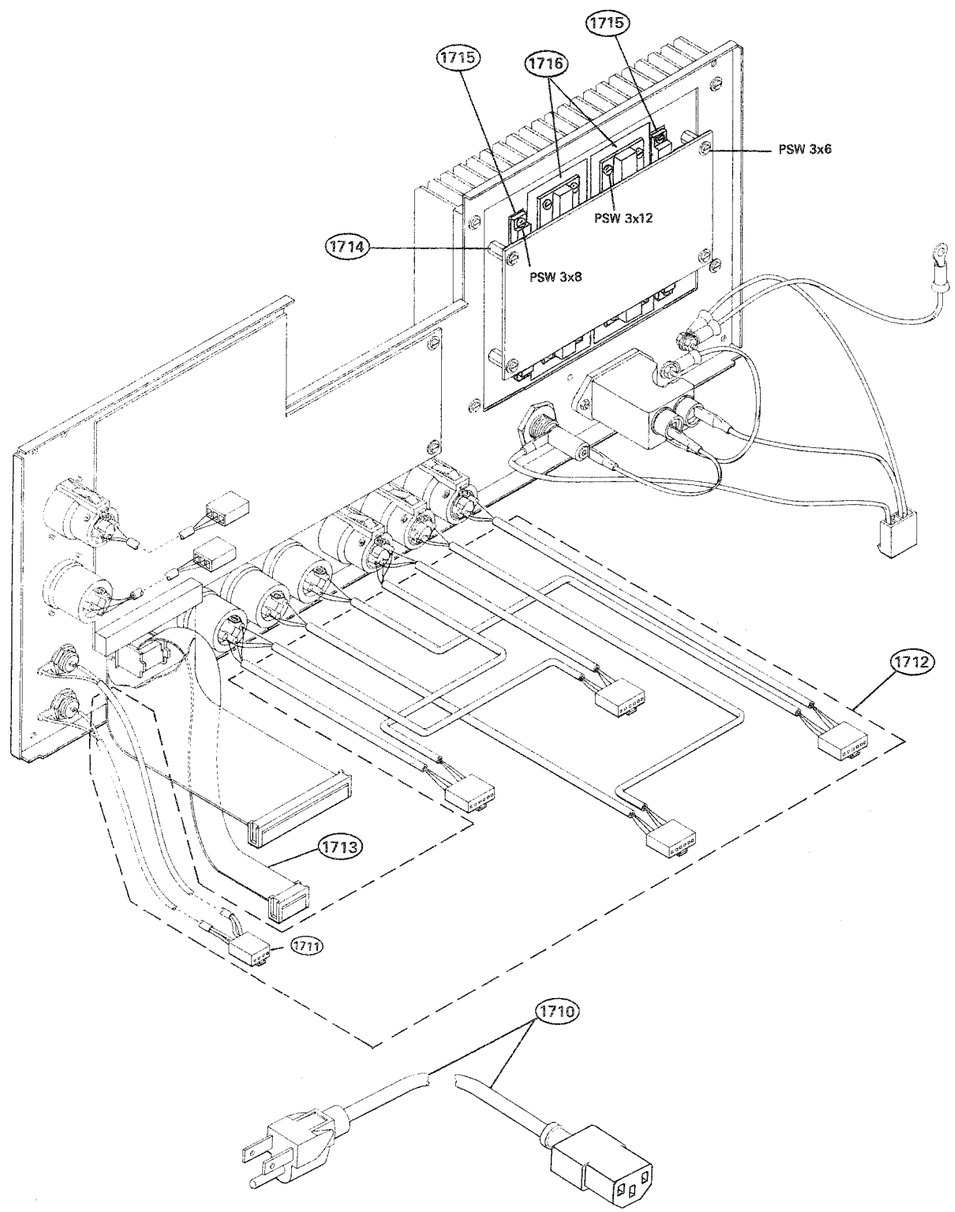

REAR PANEL ASSY

Ref. No.	SP	SONY Parts No.	Description
1701	O	A-7850-337-A	COMPLETE PCB, RMD
1702	O	A-7850-339-A	COMPLETE PCB, CNX
1703	S	⚠T-9412-524-1	AC INLET
1704	O	X-4801-204-0	TERMINAL ASSY
1705	S	1-161-051-00	CAP, CERAMIC 0.01MF 10% 50V
1706	S	1-509-176-51	CONNECTOR (RECEPTACLE) 3P
1707	S	1-509-184-51	CONNECTOR (RECEPTACLE) 3P
1708	S	⚠1-533-167-00	HOLDER, FUSE
1709	S	1-533-169-00	HOLDER, FUSE
1710	S	1-534-827-00	CORD, POWER
1711	S	1-561-781-21	CONNECTOR, BNC (RECEPTACLE)
1712	O	1-937-546-12	HARNESS (REAR PANEL SUB)
1713	O	1-937-547-11	HARNESS (NOISE REDUCTION)
1714	O	3-157-917-00	SUPPORT (B), PC BOARD
1715	O	3-577-229-00	INSULATOR, TO-126
1716	O	3-673-624-02	SHEET, INSULATING, TR
1717	O	3-711-097-02	PANEL, SILKSCREEN (A)
1718	O	3-711-098-01	PANEL, SILKSCREEN (B)
1719	O	3-711-228-01	STANDOFF, D SUB CONN
1720	O	3-711-228-11	STANDOFF, D SUB CONN
1721	O	3-711-283-02	HINGE
1722	S	4-812-134-11	RIVET NYLON, 3.5

REAR PANEL ASSY (For APR-5003V)

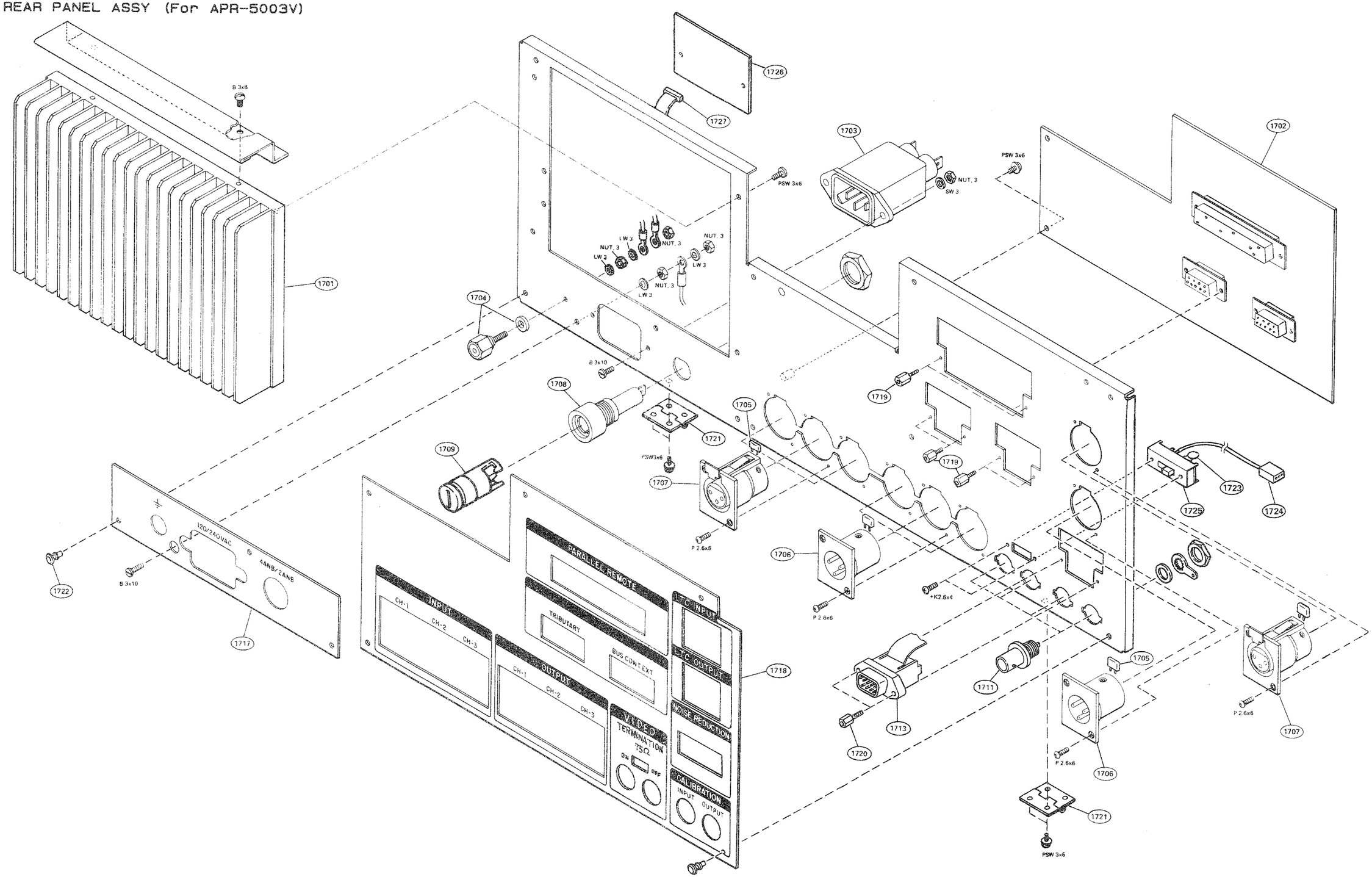

REAR PANEL ASSY (For APR-5003V)

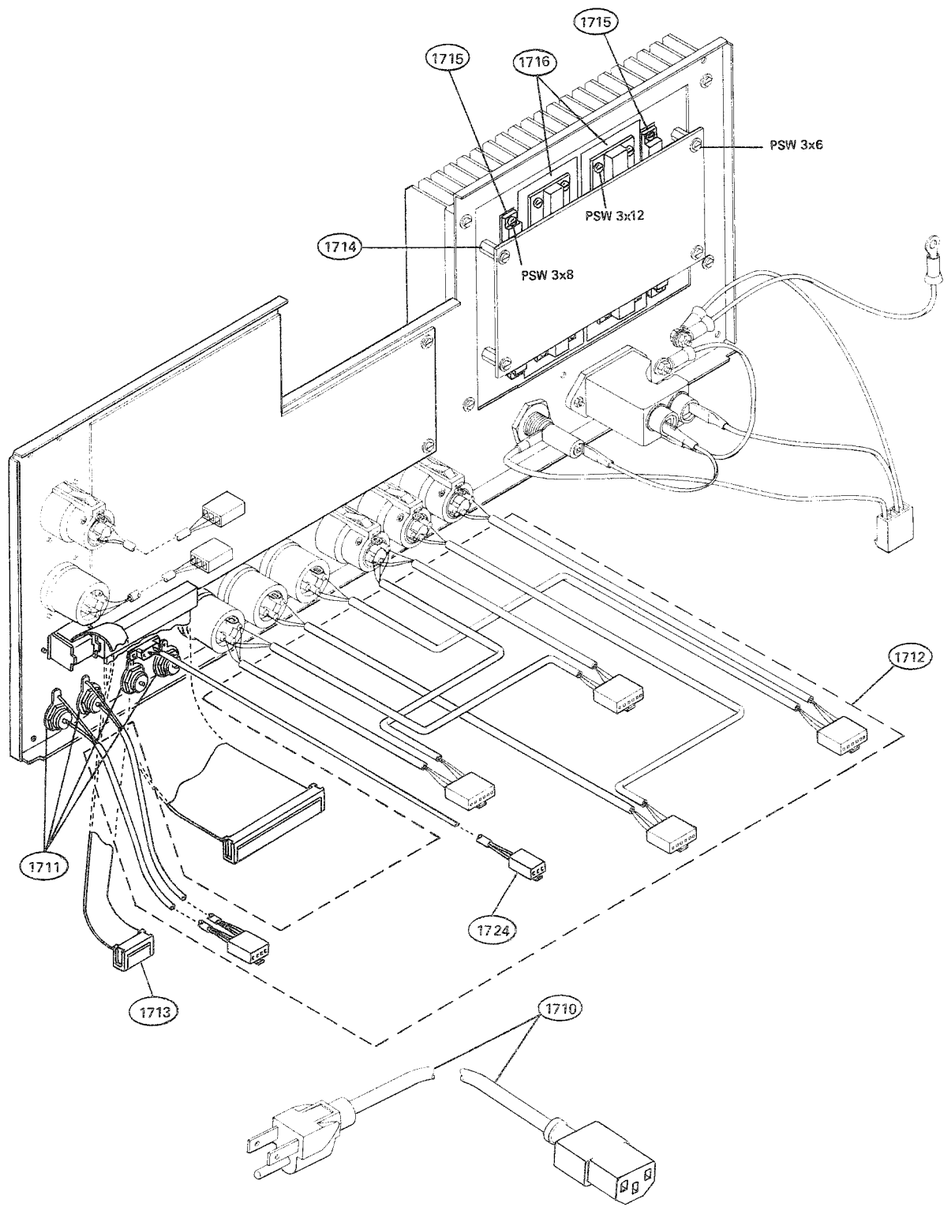

REAR PANEL ASSY

Ref. No.	SP	SONY Parts No.	Description
1701	O	A-7850-337-A	COMPLETE PCB, RMD
1702	O	A-7850-339-B	COMPLETE PCB, CNX
1703	S	T-9412-524-1	CONNECTOR, POWER INPUT
1704	O	X-4801-204-0	ASSEMBLY, TERMINAL
1705	S	1-161-051-00	CAP., CERAMIC, 0.01UF/50V
1706	S	1-509-176-51	CONNECTOR, PLUG, 3-PIN, XLR-3-32-F77
1707	S	1-509-184-51	CONNECTOR, RECEPT., 3-PIN, XLR-3-31-F77
1708	S	Δ1-533-167-00	HOLDER, FUSE
1709	S	1-533-169-00	HOLDER, FUSE
1710	S	1-551-812-00	CORD, POWER
1711	S	1-561-781-21	CONNECTOR, RECEPTACLE, BNC
1712	O	1-937-546-12	HARNESS, REAR PANEL SUB-ASSEMBLY
1713	O	1-937-547-11	HARNESS, NOISE REDUCTION
1714	O	3-157-917-00	SUPPORT, PWA
1715	O	3-577-229-00	INSULATOR, TO-126
1716	O	3-673-624-02	SHEET, INSULATING, TR
1717	O	3-711-097-02	PANEL, SILK SCREEN
1718	O	3-711-351-01	PANEL, SILK SCREEN
1719	O	3-711-228-01	STANDOFF
1720	O	3-711-228-11	STANDOFF
1721	O	3-711-283-02	HINGE
1722	S	4-812-134-11	RIVET, NYLON, 3.5
1723	S	1-124-105-00	RESISTOR, 75 OHMS, 1/4W, 1%
1724	O	1-509-984-00	HOUSING, IL CONNECTOR, 3-PIN
	O	1-560-298-00	TERMINAL, SOLDERLESS
1725	S	1-516-783-XX	SWITCH, SLIDE
1726	O	A-7850-626-A (T-9482-436-1)	COMPLETE PCB, VVT
1727	O	T-9482-689-1	HARNESS, VVT to CNX

10-2 ELECTRICAL PARTS LIST

APR-5001/5002/5003V series circuit boards are arranged in alphabetical order.

Ref. No.	SP	SONY Parts No.	Description
ACM BOARD			
	O	A-7850-370-A	COMPLETE PCB,ACM (This assembly includes the following parts.)
C1	S	1-124-499-11	ELECT 1MF 20% 50V
C2	S	1-162-726-11	CERAMIC 470PF 5% 50V
C3	S	1-123-333-00	ELECT 100MF 20% 25V
C4	S	1-124-631-11	ELECT 47MF 20% 16V
C5	S	1-162-667-11	CERAMIC 10PF 5% 50V
C6	S	1-123-333-00	ELECT 100MF 20% 25V
C7	S	1-161-485-00	CERAMIC 0.1MF 50V
C8	S	1-123-333-00	ELECT 100MF 20% 25V
C9	S	1-123-333-00	ELECT 100MF 20% 25V
C10	S	1-162-667-11	CERAMIC 10PF 5% 50V
C11	S	1-124-631-11	ELECT 47MF 20% 16V
C12	S	1-123-333-00	ELECT 100MF 20% 25V
C13	S	1-162-726-11	CERAMIC 470PF 5% 50V
C14	S	1-161-485-00	CERAMIC 0.1MF 50V
C15	S	1-124-499-11	ELECT 1MF 20% 50V
C16	S	1-123-252-00	ELECT 0.33MF 20% 50V
C17	S	1-161-473-00	CERAMIC 0.01MF 10% 50V
C18	S	1-161-473-00	CERAMIC 0.01MF 10% 50V
C19	S	1-161-485-00	CERAMIC 0.1MF 50V
C20	S	1-161-485-00	CERAMIC 0.1MF 50V
C21	S	1-161-485-00	CERAMIC 0.1MF 50V
C22	S	1-123-333-00	ELECT 100MF 20% 25V
CNJ206	O	1-564-734-21	CONNECTOR,FLAT CABLE 50P
CNJ209	O	1-564-695-21	CONNECTOR,FLAT CABLE 16P
CNJ221	O	1-560-304-00	POST HEADER (IL CONNECTOR) 8P
CNJ222	O	1-560-305-00	POST HEADER (IL CONNECTOR) 10P
CNJ223	O	1-560-302-00	POST HEADER (IL CONNECTOR) 5P
CNJ224	O	1-560-299-00	POST HEADER (IL CONNECTOR) 2P
CNJ225	O	1-564-697-21	CONNECTOR,FLAT CABLE 26P
CNJ914	O	1-564-797-11	WAFER ASSY 10P
D1	S	8-719-911-19	1SS119
D2	S	8-719-911-19	1SS119
D3	S	8-719-911-19	1SS119
D4	S	8-719-911-19	1SS119
D5	S	8-719-911-19	1SS119

Ref. No.	SP	SONY Parts No.	Description
D6	S	8-719-911-19	1SS119
D7	S	8-719-911-19	1SS119
D8	S	8-719-911-19	1SS119
IC1	S	8-759-937-40	DG212CJ
IC2	S	8-759-340-13	HD14013BP
IC3	S	8-759-901-38	SN74LS138N
IC4	S	8-759-901-38	SN74LS138N
IC5	S	8-759-100-88	uPD8279C-5
IC6	S	8-759-202-74	TC74HC04P
IC7	S	8-759-202-21	TC74HC32P
IC8	S	8-759-000-25	MC14016BCP
IC9	S	8-759-000-25	MC14016BCP
IC10	S	8-749-900-42	STK-457
IC11	S	8-759-202-74	TC74HC04P
JW3	S	1-566-388-11	PIN, SHORT
L1	S	1-409-339-00	COIL,SN
R1	S	1-214-557-00	METAL FILM 1K 1% 1/8W
R2	S	1-214-593-00	METAL FILM 33K 1% 1/8W
R3	S	1-214-545-00	METAL FILM 330 1% 1/8W
R4	S	1-214-588-00	METAL FILM 20K 1% 1/8W
R5	S	1-214-569-00	METAL FILM 3.3K 1% 1/8W
R6	S	1-214-557-00	METAL FILM 1K 1% 1/8W
R7	S	1-214-573-00	METAL FILM 4.7K 1% 1/8W
R9	S	1-249-443-11	CARBON 0.47 5% 1/4W
R10	S	1-214-533-00	METAL FILM 100 1% 1/8W
R11	S	1-249-443-11	CARBON 0.47 5% 1/4W
R12	S	1-214-588-00	METAL FILM 20K 1% 1/8W
R13	S	1-214-545-00	METAL FILM 330 1% 1/8W
R14	S	1-214-569-00	METAL FILM 3.3K 1% 1/8W
R15	S	1-214-557-00	METAL FILM 1K 1% 1/8W
R16	S	1-214-593-00	METAL FILM 33K 1% 1/8W
R17	S	1-214-573-00	METAL FILM 4.7K 1% 1/8W
R18	S	1-214-557-00	METAL FILM 1K 1% 1/8W
R20	S	1-215-823-11	METAL FILM 51K 1% 1/8W
R21	S	1-214-573-00	METAL FILM 4.7K 1% 1/8W
R22	S	1-214-573-00	METAL FILM 4.7K 1% 1/8W
R23	S	1-217-678-11	WIREWOUND 10 10% 10W
R32	S	1-217-678-11	WIREWOUND 10 10% 10W
R33	S	1-214-581-00	METAL FILM 10K 1% 1/8W
R34	S	1-214-581-00	METAL FILM 10K 1% 1/8W
R35	S	1-214-581-00	METAL FILM 10K 1% 1/8W

Ref. No.	SP	SONY Parts No.	Description
R36	S	1-214-581-00	METAL FILM 10K 1% 1/8W
R37	S	1-214-581-00	METAL FILM 10K 1% 1/8W
R38	S	1-214-581-00	METAL FILM 10K 1% 1/8W
R39	S	1-214-581-00	METAL FILM 10K 1% 1/8W
R40	S	1-214-581-00	METAL FILM 10K 1% 1/8W
R41	S	1-214-571-00	METAL FILM 3.9K 1% 1/8W
R42	S	1-214-571-00	METAL FILM 3.9K 1% 1/8W
R43	S	1-214-571-00	METAL FILM 3.9K 1% 1/8W
R44	S	1-214-571-00	METAL FILM 3.9K 1% 1/8W
R45	S	1-214-571-00	METAL FILM 3.9K 1% 1/8W
R46	S	1-214-571-00	METAL FILM 3.9K 1% 1/8W
R47	S	1-214-571-00	METAL FILM 3.9K 1% 1/8W
R48	S	1-214-571-00	METAL FILM 3.9K 1% 1/8W
R49	S	1-215-820-11	METAL FILM 39K 1% 1/8W
R50	S	1-215-820-11	METAL FILM 39K 1% 1/8W

ADM BOARD

	O	A-7810-195-A	COMPLETE PCB, ADM (This assembly includes the following parts.)
	O	3-555-872-21	SPACER
	O	3-711-099-02	MOUNTING BRACKET M.B
	O	3-711-201-01	BRACKET(R),MTB
	S	7-682-647-09	SCREW,PSW 3x6
CNJ200	O	1-564-699-21	CONNECTOR,RIBBON CABLE 34P
CNJ201	O	1-564-693-21	CONNECTOR,RIBBON CABLE 10P
CNJ202	O	1-560-301-00	POST HEADER 4P
CNJ203	O	1-560-303-00	POST HEADER 6P
CNJ205	O	1-564-734-21	CONNECTOR,RIBBON CABLE 50P
CNJ208	O	1-564-695-21	CONNECTOR,RIBBON CABLE 16P
CNJ212	O	1-560-303-00	POST HEADER 6P
CNJ213	O	1-560-303-00	POST HEADER 6P
CNJ214	O	1-560-300-00	POST HEADER 3P
CNJ215	O	1-560-303-00	POST HEADER 6P
CNJ915	O	1-560-260-00	CONNECTOR,WITH LOCK 9P

Ref. No.	SP	SONY Parts No.	Description
ALN BOARD			
	O	A-7850-336-A	MOUNTED PCB,ALN
			(This assembly includes the following parts.)
	S	4-903-740-01	FRAME, FITTING (SQUARE 10)
	S	4-903-741-01	KEY TOP (SQUARE 10)(WINDOW)
C1	S	1-161-485-00	CERAMIC 0.1MF 50V
C2	S	1-161-485-00	CERAMIC 0.1MF 50V
C3	S	1-161-485-00	CERAMIC 0.1MF 50V
C4	S	1-161-485-00	CERAMIC 0.1MF 50V
C5	S	1-161-485-00	CERAMIC 0.1MF 50V
C6	S	1-161-485-00	CERAMIC 0.1MF 50V
C7	S	1-161-485-00	CERAMIC 0.1MF 50V
C8	S	1-124-584-00	ELECT 100MF 20% 10V
CNJ207	O	1-506-958-11	PIN, CONNECTOR (PC BOARD) 50P
CNJ229	O	1-506-955-11	PIN, CONNECTOR (PC BOARD) 20P
D1	S	8-719-911-19	1SS119
D2	S	8-719-911-19	1SS119
D3	S	8-719-911-19	1SS119
D4	S	8-719-911-19	1SS119
D5	S	8-719-911-19	1SS119
D6	S	8-719-911-19	1SS119
D7	S	8-719-911-19	1SS119
D8	S	8-719-911-19	1SS119
D9	S	8-719-911-19	1SS119
D10	S	8-719-911-19	1SS119
D11	S	8-719-911-19	1SS119
D12	S	8-719-911-19	1SS119
D13	S	8-719-911-19	1SS119
D14	S	8-719-911-19	1SS119
D15	S	8-719-911-19	1SS119
D16	S	8-719-911-19	1SS119
D17	S	8-719-911-19	1SS119
D18	S	8-719-911-19	1SS119
D19	S	8-719-911-19	1SS119
D20	S	8-719-911-19	1SS119
D21	S	8-719-911-19	1SS119
D22	S	8-719-911-19	1SS119
D23	S	8-719-911-19	1SS119
D24	S	8-719-911-19	1SS119
D25	S	8-719-911-19	1SS119
D26	S	8-719-911-19	1SS119
D27	S	8-719-911-19	1SS119
D28	S	8-719-911-19	1SS119
D29	S	8-719-911-19	1SS119
D30	S	8-719-911-19	1SS119

Ref. No.	SP	SONY Parts No.	Description
D31	S	8-719-911-19	1SS119
D32	S	8-719-911-19	1SS119
DS1	S	8-719-802-12	TLR333
DS2	S	8-719-802-12	TLR333
IC1	S	8-759-100-88	uPD8279C-5
IC2	S	8-759-208-12	TC4016BPHB
IC3	S	8-759-208-12	TC4016BPHB
IC4	S	8-759-901-38	SN74LS138N
IC5	S	8-759-901-38	SN74LS138N
IC6	S	8-759-202-21	TC74HC32P
IC7	S	8-759-202-74	TC74HC04P
L1	S	1-409-339-00	COIL,SN
Q1	S	8-729-139-04	2N3904
Q2	S	8-729-139-04	2N3904
Q3	S	8-729-139-04	2N3904
Q4	S	8-729-139-04	2N3904
Q5	S	8-729-139-04	2N3904
Q6	S	8-729-139-04	2N3904
Q7	S	8-729-139-04	2N3904
Q8	S	8-729-139-04	2N3904
Q9	S	8-729-113-08	2N3906
Q10	S	8-729-113-08	2N3906
Q11	S	8-729-113-08	2N3906
Q12	S	8-729-113-08	2N3906
Q13	S	8-729-113-08	2N3906
Q14	S	8-729-113-08	2N3906
R1	S	1-214-533-00	METAL FILM 100 1% 1/8W
R2	S	1-214-533-00	METAL FILM 100 1% 1/8W
R3	S	1-214-533-00	METAL FILM 100 1% 1/8W
R4	S	1-214-533-00	METAL FILM 100 1% 1/8W
R5	S	1-214-533-00	METAL FILM 100 1% 1/8W
R6	S	1-214-533-00	METAL FILM 100 1% 1/8W
R7	S	1-214-533-00	METAL FILM 100 1% 1/8W
R8	S	1-214-533-00	METAL FILM 100 1% 1/8W
R11	S	1-215-428-00	METAL FILM 2K 1% 1/4W
R12	S	1-214-557-00	METAL FILM 1K 1% 1/8W
RN1	O	1-235-114-00	RES,ACCUMULATION
RN2	O	1-235-114-00	RES,ACCUMULATION
RN3	S	1-235-005-00	RESISTOR BLOCK 47K
S1	S	1-554-750-31	SWITCH,KEY BOARD (WITH LED)
S2	S	1-554-750-31	SWITCH,KEY BOARD (WITH LED)
S3	S	1-554-750-31	SWITCH,KEY BOARD (WITH LED)
S4	S	1-554-750-31	SWITCH,KEY BOARD (WITH LED)
S5	S	1-554-750-31	SWITCH,KEY BOARD (WITH LED)

Ref. No.	SP	SONY Parts No.	Description
S6	S	1-554-750-31	SWITCH,KEY BOARD (WITH LED)
S7	S	1-554-750-31	SWITCH,KEY BOARD (WITH LED)
S8	S	1-554-750-31	SWITCH,KEY BOARD (WITH LED)
S9	S	1-554-750-31	SWITCH,KEY BOARD (WITH LED)
S10	S	1-554-750-31	SWITCH,KEY BOARD (WITH LED)
S11	S	1-554-750-31	SWITCH,KEY BOARD (WITH LED)
S12	S	1-554-750-31	SWITCH,KEY BOARD (WITH LED)
S13	S	1-554-750-31	SWITCH,KEY BOARD (WITH LED)
S14	S	1-554-750-31	SWITCH,KEY BOARD (WITH LED)
S15	S	1-554-750-31	SWITCH,KEY BOARD (WITH LED)
S16	S	1-554-750-31	SWITCH,KEY BOARD (WITH LED)
S17	S	1-554-750-31	SWITCH,KEY BOARD (WITH LED)
S18	S	1-554-750-31	SWITCH,KEY BOARD (WITH LED)
S19	S	1-554-750-31	SWITCH,KEY BOARD (WITH LED)
S20	S	1-554-750-31	SWITCH,KEY BOARD (WITH LED)
S21	S	1-554-750-31	SWITCH,KEY BOARD (WITH LED)
S22	S	1-554-750-31	SWITCH,KEY BOARD (WITH LED)
S23	S	1-554-750-31	SWITCH,KEY BOARD (WITH LED)
S24	S	1-554-750-31	SWITCH,KEY BOARD (WITH LED)
S25	S	1-554-750-31	SWITCH,KEY BOARD (WITH LED)

Ref. No.	SP	SONY Parts No.	Description			
CNL BOARD		(1-619-158-11 to -14)				
	O	A-7850-373-A	COMPLETE PCB,CNL			
		(This assembly includes the following parts.)				
	S	1-417-157-11	BALUN			
	S	2-251-622-11	LEVER, PC BOARD			
	O	3-673-867-11	PLATE, INDICATION, PC BOARD			
	S	7-626-317-21	PIN, SPRING 2.5x8			
	S	7-628-254-20	SCREW, PS 2.6x8			
C1	S	1-123-333-00	ELECT	100MF	20%	25V
C2	S	1-123-333-00	ELECT	100MF	20%	25V
C3	S	1-123-333-00	ELECT	100MF	20%	25V
C4	S	1-123-333-00	ELECT	100MF	20%	25V
C5	S	1-123-333-00	ELECT	100MF	20%	25V
C6	S	1-162-724-11	CERAMIC	390PF	5%	50V
C8	S	1-162-716-11	CERAMIC	180PF	5%	50V
C9	S	1-162-716-11	CERAMIC	180PF	5%	50V
C10	S	1-162-668-11	CERAMIC	12PF	5%	50V
C11	S	1-124-631-11	ELECT	47MF	20%	16V
C18	S	1-161-473-00	CERAMIC	0.01MF	10%	50V
C19	S	1-162-873-11	CERAMIC	56PF	5%	50V
C20	S	1-130-777-00	POLYESTER	0.1MF	5%	100V
C21	S	1-162-720-11	CERAMIC	270PF	5%	50V
C22	S	1-162-716-11	CERAMIC	180PF	5%	50V
C23	S	1-162-724-11	CERAMIC	390PF	5%	50V
C24	S	1-162-730-11	CERAMIC	680PF	5%	50V
C25	S	1-162-736-11	CERAMIC	1500PF	10%	50V
C26	S	1-124-429-00	ELECT	0.68MF	20%	50V
C27	S	1-162-710-11	CERAMIC	100PF	5%	50V
C28	S	1-162-668-11	CERAMIC	12PF	5%	50V
C29	S	1-126-235-11	ELECT	100MF	20%	16V
C30	S	1-126-235-11	ELECT	100MF	20%	16V
C31	S	1-126-235-11	ELECT	100MF	20%	16V
C32	S	1-162-716-11	CERAMIC	180PF	5%	50V
C35	S	1-162-877-11	CERAMIC	82PF	5%	50V
C36	S	1-162-673-11	CERAMIC	33PF	5%	50V
C37	S	1-162-724-11	CERAMIC	390PF	5%	50V
C38	S	1-162-671-11	CERAMIC	22PF	5%	50V
C39	S	1-126-235-11	ELECT	100MF	20%	16V
C40	S	1-162-671-11	CERAMIC	22PF	5%	50V
C41	S	1-162-732-11	CERAMIC	820PF	5%	50V
C42	S	1-162-875-11	CERAMIC	68PF	5%	50V
C43	S	1-162-671-11	CERAMIC	22PF	5%	50V
C44	S	1-162-893-11	CERAMIC	2200PF	10%	50V

Ref. No.	SP	SONY Parts No.	Description			
C45	S	1-162-734-11	CERAMIC	0.001MF	10%	50V
C46	S	1-162-726-11	CERAMIC	470PF	5%	50V
C48	S	1-162-671-11	CERAMIC	22PF	5%	50V
C49	S	1-162-871-11	CERAMIC	47PF	5%	50V
C50	S	1-162-666-11	CERAMIC	0.027MF	10%	50V
C51	S	1-162-671-11	CERAMIC	22PF	5%	50V
C52	S	1-162-718-11	CERAMIC	220PF	5%	50V
C53	S	1-162-710-11	CERAMIC	100PF	5%	50V
C54	S	1-162-871-11	CERAMIC	47PF	5%	50V
C55	S	1-161-473-00	CERAMIC	0.01MF	10%	50V
C56	S	1-161-473-00	CERAMIC	0.01MF	10%	50V
C57	S	1-126-162-11	ELECT	3.3MF	20%	50V
C58	S	1-161-473-00	CERAMIC	0.01MF	10%	50V
C59	S	1-161-473-00	CERAMIC	0.01MF	10%	50V
C60	S	1-126-162-11	ELECT	3.3MF	20%	50V
C62	S	1-161-485-00	CERAMIC	0.1MF		50V
C63	S	1-123-357-00	ELECT	22MF	20%	35V
C64	S	1-123-357-00	ELECT	22MF	20%	35V
C65	S	1-123-357-00	ELECT	22MF	20%	35V
C66	S	1-123-357-00	ELECT	22MF	20%	35V
C67	S	1-124-499-11	ELECT	1MF	20%	50V
C68	S	1-124-499-11	ELECT	1MF	20%	50V
C69	S	1-162-714-11	CERAMIC	150PF	5%	50V
C70	S	1-162-670-11	CERAMIC	18PF	5%	50V
C71	S	1-162-800-11	CERAMIC	0.033MF	10%	50V
C72	S	1-162-800-11	CERAMIC	0.033MF	10%	50V
C73	S	1-161-473-00	CERAMIC	0.01MF	10%	50V
C74	S	1-161-473-00	CERAMIC	0.01MF	10%	50V
C75	S	1-123-357-00	ELECT	22MF	20%	35V
C76	S	1-123-357-00	ELECT	22MF	20%	35V
C80	S	1-161-485-00	CERAMIC	0.1MF		50V
C81	S	1-161-485-00	CERAMIC	0.1MF		50V
C82	S	1-123-357-00	ELECT	22MF	20%	35V
C83	S	1-123-357-00	ELECT	22MF	20%	35V
C90	S	1-123-357-00	ELECT	22MF	20%	35V
C91	S	1-123-357-00	ELECT	22MF	20%	35V
C92	S	1-123-357-00	ELECT	22MF	20%	35V
C93	S	1-123-357-00	ELECT	22MF	20%	35V
C94	S	1-123-357-00	ELECT	22MF	20%	35V
C95	S	1-123-357-00	ELECT	22MF	20%	35V
C96	S	1-162-839-11	CERAMIC	0.01MF	10%	16V
C97	S	1-123-357-00	ELECT	22MF	20%	35V
C98	S	1-123-357-00	ELECT	22MF	20%	35V
C105	S	1-162-839-11	CERAMIC	0.01MF	10%	16V
C106	S	1-123-357-00	ELECT	22MF	20%	35V

Ref. No.	SP	SONY Parts No.	Description			
C107	S	1-123-357-00	ELECT	22MF	20%	35V
C108	S	1-161-485-00	CERAMIC	0.1MF		50V
C109	S	1-162-893-11	CERAMIC	2200PF	10%	50V
C110	S	1-123-357-00	ELECT	22MF	20%	35V
C111	S	1-123-357-00	ELECT	22MF	20%	35V
C112	S	1-123-357-00	ELECT	22MF	20%	35V
C113	S	1-123-357-00	ELECT	22MF	20%	35V
C114	S	1-162-839-11	CERAMIC	0.01MF	10%	16V
C115	S	1-123-357-00	ELECT	22MF	20%	35V
C116	S	1-123-357-00	ELECT	22MF	20%	35V
C120	S	1-123-357-00	ELECT	22MF	20%	35V
C121	S	1-123-357-00	ELECT	22MF	20%	35V
C125	S	1-162-839-11	CERAMIC	0.01MF	10%	16V
C126	S	1-162-839-11	CERAMIC	0.01MF	10%	16V
C127	S	1-162-839-11	CERAMIC	0.01MF	10%	16V
C128	S	1-162-839-11	CERAMIC	0.01MF	10%	16V
C129	S	1-162-839-11	CERAMIC	0.01MF	10%	16V
C130	S	1-162-839-11	CERAMIC	0.01MF	10%	16V
C131	S	1-162-839-11	CERAMIC	0.01MF	10%	16V
C132	S	1-162-839-11	CERAMIC	0.01MF	10%	16V
C133	S	1-162-839-11	CERAMIC	0.01MF	10%	16V
C134	S	1-162-839-11	CERAMIC	0.01MF	10%	16V
C135	S	1-162-839-11	CERAMIC	0.01MF	10%	16V
C136	S	1-162-839-11	CERAMIC	0.01MF	10%	16V
C137	S	1-162-839-11	CERAMIC	0.01MF	10%	16V
C138	S	1-162-839-11	CERAMIC	0.01MF	10%	16V
C139	S	1-162-839-11	CERAMIC	0.01MF	10%	16V
C140	S	1-123-357-00	ELECT	22MF	20%	35V
C141	S	1-123-357-00	ELECT	22MF	20%	35V
C142	S	1-124-438-00	ELECT	1MF	20%	50V
C143	S	1-124-438-00	ELECT	1MF	20%	50V
C144	S	1-162-839-11	CERAMIC	0.01MF	10%	16V
C147	S	1-162-788-11	CERAMIC	3300PF	10%	50V
C148	S	1-162-732-11	CERAMIC	820PF	5%	50V
C149	S	1-162-667-11	CERAMIC	10PF	5%	50V
C150	S	1-162-670-11	CERAMIC	18PF	5%	50V
C151	S	1-162-663-11	CERAMIC	1200PF	10%	50V
C152	S	1-123-357-00	ELECT	22MF	20%	35V
C153	S	1-123-357-00	ELECT	22MF	20%	35V
C157	S	1-123-357-00	ELECT	22MF	20%	35V
C158	S	1-123-357-00	ELECT	22MF	20%	35V
C159	S	1-123-357-00	ELECT	22MF	20%	35V
C160	S	1-123-357-00	ELECT	22MF	20%	35V
C161	S	1-126-163-11	ELECT	4.7MF	20%	50V
C162	S	1-162-724-11	CERAMIC	390PF	5%	50V

Ref. No.	SP	SONY Parts No.	Description
C163	S	1-102-942-00	CERAMIC 5PF 10% 50V
C164	S	1-102-942-00	CERAMIC 5PF 10% 50V
C165	S	1-162-671-11	CERAMIC 22PF 5% 50V
C166	S	1-162-674-11	CERAMIC 39PF 5% 50V
C167	S	1-162-710-11	CERAMIC 100PF 5% 50V
C168	S	1-162-664-11	CERAMIC 1800PF 10% 50V
C169	S	1-123-357-00	ELECT 22MF 20% 35V
C170	S	1-123-357-00	ELECT 22MF 20% 35V
C171	S	1-124-438-00	ELECT 1MF 20% 50V
C172	S	1-161-473-00	CERAMIC 0.01MF 10% 50V
C173	S	1-123-357-00	ELECT 22MF 20% 35V
C174	S	1-123-357-00	ELECT 22MF 20% 35V
D1	S	8-719-911-19	1SS119
D2	S	8-719-911-19	1SS119
D3	S	8-719-911-19	1SS119
D4	S	8-719-911-19	1SS119
D5	S	8-719-911-19	1SS119
D6	S	8-719-911-19	1SS119
D7	S	8-719-911-19	1SS119
D8	S	8-719-911-19	1SS119
D9	S	8-719-911-19	1SS119
D10	S	8-719-911-19	1SS119
D11	S	8-719-200-90	11DF1
D12	S	8-719-200-90	11DF1
D13	S	8-719-911-19	1SS119
D14	S	8-719-911-19	1SS119
D15	S	8-719-200-90	11DF1
D16	S	8-719-200-90	11DF1
D17	S	8-719-911-19	1SS119
D18	S	8-719-911-19	1SS119
D19	S	8-719-911-19	1SS119
D20	S	8-719-911-19	1SS119
D21	S	T-9410-333-1	1N34
D22	S	8-719-911-19	1SS119
D23	S	8-719-911-19	1SS119
D24	S	8-719-911-19	1SS119
D25	S	8-719-109-85	RD5.1ES-B2
D26	S	8-719-911-19	1SS119
IC1	S	8-759-905-34	NE5534AN
IC2	S	8-759-905-34	NE5534AN
IC3	S	8-759-900-72	NE5532P
IC4	S	8-759-937-40	DG212CJ
IC5	S	8-759-937-20	AD7528AQ

Ref. No.	SP	SONY Parts No.	Description
IC6	S	8-741-135-20	BX1352
IC7	S	8-759-910-83	TL072ACP
IC8	S	8-759-910-83	TL072ACP
IC9	S	8-759-910-83	TL072ACP
IC10	S	8-759-905-34	NE5534AN
IC11	S	8-741-135-30	BX1353
IC12	S	8-759-937-40	DG212CJ
IC13	S	8-759-937-40	DG212CJ
IC14	S	8-759-937-40	DG212CJ
IC15	S	8-759-910-83	TL072ACP
IC16	S	8-759-937-40	DG212CJ
IC17	S	8-759-937-20	AD7528AQ
IC18	S	8-759-905-34	NE5534AN
IC19	S	8-759-937-40	DG212CJ
IC21	S	8-759-937-20	AD7528AQ
IC22	S	8-759-903-16	LM318P
IC23	S	8-759-937-40	DG212CJ
IC24	S	8-759-903-16	LM318P
IC25	S	8-759-903-16	LM318P
IC26	S	8-759-937-26	LM13600N
IC27	S	8-759-910-83	TL072ACP
IC28	S	8-759-202-55	TC74HC244P
IC29	S	8-759-203-48	TC74HC573P
IC30	S	8-759-203-48	TC74HC573P
IC31	S	8-759-203-48	TC74HC573P
IC32	S	8-759-202-14	TC74HC08P
IC33	S	8-759-202-21	TC74HC32P
IC34	S	8-759-202-21	TC74HC32P
IC35	S	8-759-202-12	TC74HC02P
IC36	S	8-759-245-16	TC4516BP
IC37	S	8-759-245-16	TC4516BP
IC38	S	8-759-340-13	HD14013BP
IC39	S	8-759-340-13	HD14013BP
IC40	S	8-759-140-69	uPD4069UBC
IC41	S	8-759-240-01	TC4001BP
IC42	S	8-759-140-81	uPD4081BC
IC43	S	8-719-945-28	PC619
IC44	S	8-719-901-03	PC525
IC46	S	8-759-981-00	TL081CP
IC47	S	8-759-202-21	TC74HC32P
IC48	S	8-759-907-01	TL071CP
K1	S	T-9413-260-1	RELAY,DPDT,5V
K2	S	T-9413-260-1	RELAY,DPDT,5V

Ref. No.	SP	SONY Parts No.	Description
L1	S	1-408-092-00	MICRO INDUCTOR 330MH 5%
L2	S	1-409-339-00	COIL,SN
L3	S	1-408-092-00	MICRO INDUCTOR 330MH 5%
Q1	S	T-9410-286-1	SP7000-0127-01
Q2	S	8-729-313-32	2SD1133
Q3	S	8-729-385-72	2SB857-C
Q4	S	8-729-313-32	2SD1133
Q5	S	8-729-385-72	2SB857-C
Q6	S	8-729-904-15	VN10KM
Q7	S	8-759-937-24	LM394H
Q8	S	T-9410-286-1	SP7000-0127-01
Q9	S	8-729-904-18	P1086
		(APR-5002: Up to No. 20300)	
R2	S	1-214-533-00	METAL FILM 100 1% 1/8W
R3	S	1-214-533-00	METAL FILM 100 1% 1/8W
R4	S	1-214-533-00	METAL FILM 100 1% 1/8W
R5	S	1-214-557-00	METAL FILM 1K 1% 1/8W
R6	S	1-247-887-00	CARBON 220K 5% 1/4W
R11	S	1-214-745-00	METAL FILM 4.7K 1% 1/4W
R12	S	1-214-769-00	METAL FILM 47K 1% 1/4W
R23	S	1-214-765-00	METAL FILM 33K 1% 1/4W
R24	S	1-214-557-00	METAL FILM 1K 1% 1/8W
R25	S	1-247-888-11	CARBON 240K 5% 1/4W
R26	S	1-214-549-00	METAL FILM 470 1% 1/8W
R27	S	1-214-533-00	METAL FILM 100 1% 1/8W
R28	S	1-247-887-00	CARBON 220K 5% 1/4W
R30	S	1-214-748-00	METAL FILM 6.2K 1% 1/4W
R31	S	1-214-581-00	METAL FILM 10K 1% 1/8W
R32	S	1-214-574-00	METAL FILM 5.1K 1% 1/8W
R33	S	1-214-581-00	METAL FILM 10K 1% 1/8W
R34	S	1-214-575-00	METAL FILM 5.6K 1% 1/8W
R35	S	1-218-197-11	METAL FILM 2.43K 1% 1/8W
R36	S	1-214-757-00	METAL FILM 15K 1% 1/4W
R37	S	1-214-564-00	METAL FILM 2K 1% 1/8W
R38	S	1-214-564-00	METAL FILM 2K 1% 1/8W
R39	S	1-214-573-00	METAL FILM 4.7K 1% 1/8W
R42	S	1-214-533-00	METAL FILM 100 1% 1/8W
R43	S	1-249-441-11	CARBON 100K 5% 1/4W
R44	S	1-214-545-00	METAL FILM 330 1% 1/8W
R45	S	1-215-826-11	METAL FILM 68K 1% 1/8W
R46	S	1-215-826-11	METAL FILM 68K 1% 1/8W
R47	S	1-218-194-11	METAL FILM 1.62K 1% 1/8W
R48	S	1-218-200-11	METAL FILM 3.74K 1% 1/8W

Ref. No.	SP	SONY Parts No.	Description
R49	S	1-218-201-11	METAL FILM 4.12K 1% 1/8W
R50	S	1-218-221-11	METAL FILM 40.2K 1% 1/8W
R51	S	1-214-760-00	METAL FILM 20K 1% 1/4W
R52	S	1-214-760-00	METAL FILM 20K 1% 1/4W
R53	S	1-214-753-00	METAL FILM 10K 1% 1/4W
R54	S	1-218-213-11	METAL FILM 21K 1% 1/6W
R56	S	1-218-220-11	METAL FILM 39.2K 1% 1/6W
R57	S	1-214-760-00	METAL FILM 20K 1% 1/4W
R58	S	1-214-749-00	METAL FILM 6.8K 1% 1/4W
R59	S	1-214-549-00	METAL FILM 470 1% 1/8W
R60	S	1-214-760-00	METAL FILM 20K 1% 1/4W
R61	S	1-218-216-11	METAL FILM 28K 1% 1/8W
R62	S	1-214-736-00	METAL FILM 2K 1% 1/4W
R63	S	1-218-200-11	METAL FILM 3.74K 1% 1/8W
R64	S	1-218-194-11	METAL FILM 1.62K 1% 1/8W
R65	S	1-214-743-00	METAL FILM 3.9K 1% 1/4W
R66	S	1-214-557-00	METAL FILM 1K 1% 1/8W
R67	S	1-247-888-11	CARBON 240K 5% 1/4W
R68	S	1-214-572-00	METAL FILM 4.3K 1% 1/8W
R69	S	1-214-772-00	METAL FILM 62K 1% 1/4W
R70	S	1-214-573-00	METAL FILM 4.7K 1% 1/8W
R71	S	1-214-574-00	METAL FILM 5.1K 1% 1/8W
R73	S	1-214-557-00	METAL FILM 1K 1% 1/8W
R74	S	1-247-888-11	CARBON 240K 5% 1/4W
R75	S	1-215-822-11	METAL FILM 47K 1% 1/8W
R76	S	1-214-557-00	METAL FILM 1K 1% 1/8W
R77	S	1-214-772-00	METAL FILM 62K 1% 1/4W
R78	S	1-214-557-00	METAL FILM 1K 1% 1/8W
R79	S	1-214-573-00	METAL FILM 4.7K 1% 1/8W
R80	S	1-247-893-11	CARBON 390K 5% 1/4W
R81	S	1-215-827-11	METAL FILM 75K 1% 1/8W
R82	S	1-214-739-00	METAL FILM 2.7K 1% 1/4W
R83	S	1-249-441-11	CARBON 100K 5% 1/4W
R84	S	1-214-533-00	METAL FILM 100 1% 1/8W
R85	S	1-247-889-00	CARBON 270K 5% 1/4W
R86	S	1-214-773-00	METAL FILM 68K 1% 1/4W
R87	S	1-214-581-00	METAL FILM 10K 1% 1/8W
R88	S	1-214-753-00	METAL FILM 10K 1% 1/4W
R89	S	1-214-753-00	METAL FILM 10K 1% 1/4W
R90	S	1-214-746-00	METAL FILM 5.1K 1% 1/4W
R91	S	1-214-753-00	METAL FILM 10K 1% 1/4W
R92	S	1-214-746-00	METAL FILM 5.1K 1% 1/4W
R93	S	1-214-753-00	METAL FILM 10K 1% 1/4W
R94	S	1-214-746-00	METAL FILM 5.1K 1% 1/4W
R95	S	1-214-746-00	METAL FILM 5.1K 1% 1/4W

Ref. No.	SP	SONY Parts No.	Description
R96	S	1-214-578-00	METAL FILM 7.5K 1% 1/8W
R97	S	1-214-578-00	METAL FILM 7.5K 1% 1/8W
R98	S	1-214-753-00	METAL FILM 10K 1% 1/4W
R99	S	1-214-753-00	METAL FILM 10K 1% 1/4W
R100	S	1-214-746-00	METAL FILM 5.1K 1% 1/4W
R101	S	1-214-753-00	METAL FILM 10K 1% 1/4W
R102	S	1-214-746-00	METAL FILM 5.1K 1% 1/4W
R103	S	1-214-753-00	METAL FILM 10K 1% 1/4W
R104	S	1-214-746-00	METAL FILM 5.1K 1% 1/4W
R105	S	1-214-746-00	METAL FILM 5.1K 1% 1/4W
R106	S	1-214-578-00	METAL FILM 7.5K 1% 1/8W
R107	S	1-214-578-00	METAL FILM 7.5K 1% 1/8W
R108	S	1-214-563-00	METAL FILM 1.8K 1% 1/8W
R109	S	1-214-567-00	METAL FILM 2.7K 1% 1/8W
R110	S	1-214-563-00	METAL FILM 1.8K 1% 1/8W
R111	S	1-214-567-00	METAL FILM 2.7K 1% 1/8W
R112	S	1-214-719-00	METAL FILM 390 1% 1/4W
R113	S	1-214-584-00	METAL FILM 13K 1% 1/8W
R114	S	1-214-719-00	METAL FILM 390 1% 1/4W
R115	S	1-214-581-00	METAL FILM 10K 1% 1/8W
R116	S	1-214-719-00	METAL FILM 390 1% 1/4W
R117	S	1-214-584-00	METAL FILM 13K 1% 1/8W
R118	S	1-214-719-00	METAL FILM 390 1% 1/4W
R119	S	1-214-581-00	METAL FILM 10K 1% 1/8W
R120	S	1-214-581-00	METAL FILM 10K 1% 1/8W
R121	S	1-214-565-00	METAL FILM 2.2K 1% 1/8W
R122	S	1-214-581-00	METAL FILM 10K 1% 1/8W
R123	S	1-214-574-00	METAL FILM 5.1K 1% 1/8W
R124	S	1-214-581-00	METAL FILM 10K 1% 1/8W
R125	S	1-214-565-00	METAL FILM 2.2K 1% 1/8W
R126	S	1-214-581-00	METAL FILM 10K 1% 1/8W
R127	S	1-214-574-00	METAL FILM 5.1K 1% 1/8W
R128	S	1-214-581-00	METAL FILM 10K 1% 1/8W
R129	S	1-214-574-00	METAL FILM 5.1K 1% 1/8W
R130	S	1-214-533-00	METAL FILM 100 1% 1/8W
R131	S	1-215-822-11	METAL FILM 47K 1% 1/8W
R132	S	1-214-533-00	METAL FILM 100 1% 1/8W
R133	S	1-218-203-11	METAL FILM 5.9K 1% 1/8W
R134	S	1-214-573-00	METAL FILM 4.7K 1% 1/8W
R135	S	1-214-593-00	METAL FILM 33K 1% 1/8W
R136	S	1-214-577-00	METAL FILM 6.8K 1% 1/8W
R137	S	1-214-573-00	METAL FILM 4.7K 1% 1/8W
R138	S	1-214-573-00	METAL FILM 4.7K 1% 1/8W
R139	S	1-214-574-00	METAL FILM 5.1K 1% 1/8W
R140	S	1-215-822-11	METAL FILM 47K 1% 1/8W

Ref. No.	SP	SONY Parts No.	Description
R141	S	1-214-573-00	METAL FILM 4.7K 1% 1/8W
R142	S	1-249-482-11	CARBON 4.7 5% 1/2W
R143	S	1-249-482-11	CARBON 4.7 5% 1/2W
R144	S	1-206-456-00	CARBON 5.1 5% 1/2W
R145	S	1-206-456-00	CARBON 5.1 5% 1/2W
R146	S	1-215-822-11	METAL FILM 47K 1% 1/8W
R147	S	1-215-822-11	METAL FILM 47K 1% 1/8W
R148	S	1-215-822-11	METAL FILM 47K 1% 1/8W
R149	S	1-215-822-11	METAL FILM 47K 1% 1/8W
R150	S	1-214-585-00	METAL FILM 15K 1% 1/8W
R151	S	1-214-574-00	METAL FILM 5.1K 1% 1/8W
R152	S	1-214-574-00	METAL FILM 5.1K 1% 1/8W
R153	S	1-214-587-00	METAL FILM 18K 1% 1/8W
R154	S	1-214-738-00	METAL FILM 2.4K 1% 1/4W
R156	S	1-214-545-00	METAL FILM 330 1% 1/8W
R157 } R158	S	1-214-757-00	METAL FILM 15K PAIR
R159 } R160	S	1-216-786-11	METAL FILM 180 PAIR
R161	S	1-214-743-00	METAL FILM 3.9K 1% 1/4W
R162 } R163	S	1-216-787-11	METAL FILM 5.1K PAIR
R164 } R165	S	1-216-787-11	METAL FILM 5.1K PAIR
R166	S	1-214-589-00	METAL FILM 22K 1% 1/8W
R169	S	1-214-557-00	METAL FILM 1K 1% 1/8W
R170	S	1-214-557-00	METAL FILM 1K 1% 1/8W
R171	S	1-247-888-11	METAL FILM 240K 5% 1/4W
R172	S	1-214-738-00	METAL FILM 2.4K 1% 1/4W
R173	S	1-214-581-00	METAL FILM 10K 1% 1/8W
R174	S	1-214-553-00	METAL FILM 680 1% 1/8W
R175	S	1-214-574-00	METAL FILM 5.1K 1% 1/8W
R176	S	1-214-574-00	METAL FILM 5.1K 1% 1/8W
R177	S	1-214-573-00	METAL FILM 4.7K 1% 1/8W
R178	S	1-218-213-11	METAL FILM 21K 1% 1/8W
R179	S	1-218-228-11	METAL FILM 140K 1% 1/8W
R180	S	1-214-564-11	METAL FILM 2K 1% 1/8W
R181	S	1-214-581-00	METAL FILM 10K 1% 1/8W
R182	S	1-214-581-00	METAL FILM 10K 1% 1/8W
R183	S	1-215-830-11	METAL FILM 100K 1% 1/8W
R184	S	1-215-830-11	METAL FILM 100K 1% 1/8W
RV1	S	1-237-521-21	ADJ,METAL FILM 100K
RV2	S	1-237-514-21	ADJ,METAL FILM 500
RV3	S	1-237-518-21	ADJ,METAL FILM 10K
RV4	S	1-230-838-11	ADJ,METAL FILM 200
RV5	S	1-230-838-11	ADJ,METAL FILM 200

Ref. No.	SP	SONY Parts No.	Description			
CNL BOARD (1-619-158-15)						
	O	A-7850-373-A	COMPLETE PCB,CNL (This assembly includes the following parts.)			
	S	1-417-157-11	BALUN			
	S	2-251-622-11	LEVER, PC BOARD			
	O	3-673-867-11	PLATE, INDICATION, PC BOARD			
	S	7-626-317-21	PIN, SPRING 2.5x8			
	S	7-628-254-20	SCREW, PS 2.6x8			
C1	S	1-123-333-00	ELECT	100MF	20%	25V
C2	S	1-123-333-00	ELECT	100MF	20%	25V
C3	S	1-123-333-00	ELECT	100MF	20%	25V
C4	S	1-123-333-00	ELECT	100MF	20%	25V
C5	S	1-123-333-00	ELECT	100MF	20%	25V
C6	S	1-162-724-11	CERAMIC	390PF	5%	50V
C8	S	1-162-716-11	CERAMIC	180PF	5%	50V
C9	S	1-162-716-11	CERAMIC	180PF	5%	50V
C10	S	1-162-668-11	CERAMIC	12PF	5%	50V
C11	S	1-124-631-11	ELECT	47MF	20%	16V
C12	S	1-162-710-11	CERAMIC	100PF	5%	50V
C15	S	1-162-710-11	CERAMIC	100PF	5%	50V
C18	S	1-161-473-00	CERAMIC	0.01MF	10%	50V
C19	S	1-162-873-11	CERAMIC	56PF	5%	50V
C20	S	1-130-777-00	POLYESTER	0.1MF	5%	100V
C21	S	1-162-720-11	CERAMIC	270PF	5%	50V
C22	S	1-162-716-11	CERAMIC	180PF	5%	50V
C23	S	1-162-724-11	CERAMIC	390PF	5%	50V
C24	S	1-162-730-11	CERAMIC	680PF	5%	50V
C25	S	1-162-736-11	CERAMIC	1500PF	10%	50V
C26	S	1-124-429-00	ELECT	0.68MF	20%	50V
C27	S	1-162-710-11	CERAMIC	100PF	5%	50V
C28	S	1-162-668-11	CERAMIC	12PF	5%	50V
C29	S	1-126-235-11	ELECT	100MF	20%	16V
C30	S	1-126-235-11	ELECT	100MF	20%	16V
C31	S	1-126-235-11	ELECT	100MF	20%	16V
C32	S	1-162-716-11	CERAMIC	180PF	5%	50V
C35	S	1-162-877-11	CERAMIC	82PF	5%	50V
C36	S	1-162-673-11	CERAMIC	33PF	5%	50V
C37	S	1-162-724-11	CERAMIC	390PF	5%	50V
C38	S	1-162-671-11	CERAMIC	22PF	5%	50V
C39	S	1-126-235-11	ELECT	100MF	20%	16V
C40	S	1-162-671-11	CERAMIC	22PF	5%	50V
C41	S	1-162-732-11	CERAMIC	820PF	5%	50V
C42	S	1-162-875-11	CERAMIC	68PF	5%	50V

Ref. No.	SP	SONY Parts No.	Description			
C43	S	1-162-671-11	CERAMIC	22PF	5%	50V
C44	S	1-162-893-11	CERAMIC	2200PF	10%	50V
C45	S	1-162-734-11	CERAMIC	0.001MF	10%	50V
C46	S	1-162-726-11	CERAMIC	470PF	5%	50V
C48	S	1-162-671-11	CERAMIC	22PF	5%	50V
C49	S	1-162-871-11	CERAMIC	47PF	5%	50V
C50	S	1-162-666-11	CERAMIC	0.027MF	10%	50V
C51	S	1-162-671-11	CERAMIC	22PF	5%	50V
C52	S	1-162-718-11	CERAMIC	220PF	5%	50V
C53	S	1-162-710-11	CERAMIC	100PF	5%	50V
C54	S	1-162-871-11	CERAMIC	47PF	5%	50V
C55	S	1-161-473-00	CERAMIC	0.01MF	10%	50V
C56	S	1-161-473-00	CERAMIC	0.01MF	10%	50V
C57	S	1-126-162-11	ELECT	3.3MF	20%	50V
C58	S	1-161-473-00	CERAMIC	0.01MF	10%	50V
C59	S	1-161-473-00	CERAMIC	0.01MF	10%	50V
C60	S	1-126-162-11	ELECT	3.3MF	20%	50V
C62	S	1-161-485-00	CERAMIC	0.1MF		50V
C63	S	1-123-357-00	ELECT	22MF	20%	35V
C64	S	1-123-357-00	ELECT	22MF	20%	35V
C65	S	1-123-357-00	ELECT	22MF	20%	35V
C66	S	1-123-357-00	ELECT	22MF	20%	35V
C67	S	1-124-499-11	ELECT	1MF	20%	50V
C68	S	1-124-499-11	ELECT	1MF	20%	50V
C69	S	1-162-714-11	CERAMIC	150PF	5%	50V
C70	S	1-162-670-11	CERAMIC	18PF	5%	50V
C71	S	1-162-800-11	CERAMIC	0.033MF	10%	50V
C72	S	1-162-800-11	CERAMIC	0.033MF	10%	50V
C73	S	1-161-473-00	CERAMIC	0.01MF	10%	50V
C74	S	1-161-473-00	CERAMIC	0.01MF	10%	50V
C75	S	1-123-357-00	ELECT	22MF	20%	35V
C76	S	1-123-357-00	ELECT	22MF	20%	35V
C80	S	1-161-485-00	CERAMIC	0.1MF		50V
C81	S	1-161-485-00	CERAMIC	0.1MF		50V
C82	S	1-123-357-00	ELECT	22MF	20%	35V
C83	S	1-123-357-00	ELECT	22MF	20%	35V
C90	S	1-123-357-00	ELECT	22MF	20%	35V
C91	S	1-123-357-00	ELECT	22MF	20%	35V
C92	S	1-123-357-00	ELECT	22MF	20%	35V
C93	S	1-123-357-00	ELECT	22MF	20%	35V
C94	S	1-123-357-00	ELECT	22MF	20%	35V
C95	S	1-123-357-00	ELECT	22MF	20%	35V
C96	S	1-162-839-11	CERAMIC	0.01MF	10%	16V
C97	S	1-123-357-00	ELECT	22MF	20%	35V
C98	S	1-123-357-00	ELECT	22MF	20%	35V

Ref. No.	SP	SONY Parts No.	Description
C105	S	1-162-839-11	CERAMIC 0.01MF 10% 16V
C106	S	1-123-357-00	ELECT 22MF 20% 35V
C107	S	1-123-357-00	ELECT 22MF 20% 35V
C108	S	1-161-485-00	CERAMIC 0.1MF 50V
C109	S	1-162-893-11	CERAMIC 2200PF 10% 50V
C110	S	1-123-357-00	ELECT 22MF 20% 35V
C111	S	1-123-357-00	ELECT 22MF 20% 35V
C112	S	1-123-357-00	ELECT 22MF 20% 35V
C113	S	1-123-357-00	ELECT 22MF 20% 35V
C114	S	1-162-839-11	CERAMIC 0.01MF 10% 16V
C115	S	1-123-357-00	ELECT 22MF 20% 35V
C116	S	1-123-357-00	ELECT 22MF 20% 35V
C120	S	1-123-357-00	ELECT 22MF 20% 35V
C121	S	1-123-357-00	ELECT 22MF 20% 35V
C125	S	1-162-839-11	CERAMIC 0.01MF 10% 16V
C126	S	1-162-839-11	CERAMIC 0.01MF 10% 16V
C127	S	1-162-839-11	CERAMIC 0.01MF 10% 16V
C128	S	1-162-839-11	CERAMIC 0.01MF 10% 16V
C129	S	1-162-839-11	CERAMIC 0.01MF 10% 16V
C130	S	1-162-839-11	CERAMIC 0.01MF 10% 16V
C131	S	1-162-839-11	CERAMIC 0.01MF 10% 16V
C132	S	1-162-839-11	CERAMIC 0.01MF 10% 16V
C133	S	1-162-839-11	CERAMIC 0.01MF 10% 16V
C134	S	1-162-839-11	CERAMIC 0.01MF 10% 16V
C135	S	1-162-839-11	CERAMIC 0.01MF 10% 16V
C136	S	1-162-839-11	CERAMIC 0.01MF 10% 16V
C137	S	1-162-839-11	CERAMIC 0.01MF 10% 16V
C138	S	1-162-839-11	CERAMIC 0.01MF 10% 16V
C139	S	1-162-839-11	CERAMIC 0.01MF 10% 16V
C140	S	1-123-357-00	ELECT 22MF 20% 35V
C141	S	1-123-357-00	ELECT 22MF 20% 35V
C142	S	1-124-438-00	ELECT 1MF 20% 50V
C143	S	1-124-438-00	ELECT 1MF 20% 50V
C144	S	1-162-839-11	CERAMIC 0.01MF 10% 16V
C147	S	1-162-788-11	CERAMIC 3300PF 10% 50V
C148	S	1-162-732-11	CERAMIC 820PF 5% 50V
C149	S	1-162-667-11	CERAMIC 10PF 5% 50V
C150	S	1-162-670-11	CERAMIC 18PF 5% 50V
C151	S	1-162-663-11	CERAMIC 1200PF 10% 50V
C152	S	1-123-357-00	ELECT 22MF 20% 35V
C153	S	1-123-357-00	ELECT 22MF 20% 35V
C157	S	1-123-357-00	ELECT 22MF 20% 35V
C158	S	1-123-357-00	ELECT 22MF 20% 35V
C159	S	1-123-357-00	ELECT 22MF 20% 35V
C160	S	1-123-357-00	ELECT 22MF 20% 35V

Ref. No.	SP	SONY Parts No.	Description			
C161	S	1-126-163-11	ELECT	4.7MF	20%	50V
C162	S	1-162-724-11	CERAMIC	390PF	5%	50V
C163	S	1-102-942-00	CERAMIC	5PF	10%	50V
C164	S	1-102-942-00	CERAMIC	5PF	10%	50V
C165	S	1-162-671-11	CERAMIC	22PF	5%	50V
C166	S	1-162-674-11	CERAMIC	39PF	5%	50V
C167	S	1-162-710-11	CERAMIC	100PF	5%	50V
C168	S	1-162-664-11	CERAMIC	1800PF	10%	50V
C169	S	1-123-357-00	ELECT	22MF	20%	35V
C170	S	1-123-357-00	ELECT	22MF	20%	35V
C171	S	1-124-438-00	ELECT	1MF	20%	50V
C172	S	1-161-473-00	CERAMIC	0.01MF	10%	50V
C173	S	1-123-357-00	ELECT	22MF	20%	35V
C174	S	1-123-357-00	ELECT	22MF	20%	35V
D1	S	8-719-911-19	1SS119			
D2	S	8-719-911-19	1SS119			
D3	S	8-719-911-19	1SS119			
D4	S	8-719-911-19	1SS119			
D5	S	8-719-911-19	1SS119			
D6	S	8-719-911-19	1SS119			
D7	S	8-719-911-19	1SS119			
D8	S	8-719-911-19	1SS119			
D9	S	8-719-911-19	1SS119			
D10	S	8-719-911-19	1SS119			
D11	S	8-719-200-90	11DF1			
D12	S	8-719-200-90	11DF1			
D13	S	8-719-911-19	1SS119			
D14	S	8-719-911-19	1SS119			
D15	S	8-719-200-90	11DF1			
D16	S	8-719-200-90	11DF1			
D17	S	8-719-911-19	1SS119			
D18	S	8-719-911-19	1SS119			
D19	S	8-719-911-19	1SS119			
D20	S	8-719-911-19	1SS119			
D21	S	T-9410-333-1	1N34			
D22	S	8-719-911-19	1SS119			
D23	S	8-719-911-19	1SS119			
D24	S	8-719-911-19	1SS119			
D25	S	8-719-109-85	RD5.1ES-B2			
D26	S	8-719-911-19	1SS119			
IC1	S	8-759-905-34	NE5534AN			
IC2	S	8-759-905-34	NE5534AN			
IC3	S	8-759-900-72	NE5532P			
IC4	S	8-759-937-40	DG212CJ			
IC5	S	8-759-937-20	AD7528AQ			

Ref. No.	SP	SONY Parts No.	Description
IC6	S	8-741-135-20	BX1352
IC7	S	8-759-910-83	TL072ACP
IC8	S	8-759-910-83	TL072ACP
IC9	S	8-759-910-83	TL072ACP
IC10	S	8-759-905-34	NE5534AN
IC11	S	8-741-135-30	BX1353
IC12	S	8-759-937-40	DG212CJ
IC13	S	8-759-937-40	DG212CJ
IC14	S	8-759-937-40	DG212CJ
IC15	S	8-759-910-83	TL072ACP
IC16	S	8-759-937-40	DG212CJ
IC17	S	8-759-937-20	AD7528AQ
IC18	S	8-759-905-34	NE5534AN
IC19	S	8-759-937-40	DG212CJ
IC21	S	8-759-937-20	AD7528AQ
IC22	S	8-759-903-16	LM318P
IC23	S	8-759-937-40	DG212CJ
IC24	S	8-759-903-16	LM318P
IC25	S	8-759-903-16	LM318P
IC26	S	8-759-937-26	LM13600N
IC27	S	8-759-910-83	TL072ACP
IC28	S	8-759-202-55	TC74HC244P
IC29	S	8-759-203-48	TC74HC573P
IC30	S	8-759-203-48	TC74HC573P
IC31	S	8-759-203-48	TC74HC573P
IC32	S	8-759-202-14	TC74HC08P
IC33	S	8-759-202-21	TC74HC32P
IC34	S	8-759-202-21	TC74HC32P
IC35	S	8-759-202-12	TC74HC02P
IC36	S	8-759-245-16	TC4516BP
IC37	S	8-759-245-16	TC4516BP
IC38	S	8-759-340-13	HD14013BP
IC39	S	8-759-340-13	HD14013BP
IC40	S	8-759-140-69	uPD4069UBC
IC41	S	8-759-240-01	TC4001BP
IC42	S	8-759-140-81	uPD4081BC
IC43	S	8-719-945-28	PC619
IC44	S	8-719-901-03	PC525
IC46	S	8-759-981-00	TL081CP
IC47	S	8-759-202-21	TC74HC32P
IC48	S	8-759-907-01	TL071CP
JW4	S	1-566-388-11	PIN,SHORT
JW5	S	1-566-388-11	PIN,SHORT
K1	S	1-515-716-11	RELAY,DPDT,5V
K2	S	1-515-716-11	RELAY,DPDT,5V

Ref. No.	SP	SONY Parts No.	Description
L1	S	1-408-092-00	MICRO INDUCTOR 330MH 5%
L2	S	1-409-339-00	COIL,SN
L3	S	1-408-092-00	MICRO INDUCTOR 330MH 5%
Q1	S	T-9410-286-1	SP7000-0127-01
Q2	S	8-729-313-32	2SD1133
Q3	S	8-729-385-72	2SB857-C
Q4	S	8-729-313-32	2SD1133
Q5	S	8-729-385-72	2SB857-C
Q6	S	8-729-904-15	VN10KM
Q7	S	8-759-937-24	LM394H
Q8	S	T-9410-286-1	SP7000-0127-01
R2	S	1-214-550-00	METAL FILM 510 1% 1/8W
R3	S	1-214-533-00	METAL FILM 100 1% 1/8W
R4	S	1-214-533-00	METAL FILM 100 1% 1/8W
R5	S	1-214-557-00	METAL FILM 1K 1% 1/8W
R6	S	1-247-887-00	CARBON 220K 5% 1/4W
R11	S	1-214-745-00	METAL FILM 4.7K 1% 1/4W
R12	S	1-214-769-00	METAL FILM 47K 1% 1/4W
R13	S	1-215-825-11	METAL FILM 62K 1% 1/8W
R14	S	1-215-825-11	METAL FILM 62K 1% 1/8W
R23	S	1-214-765-00	METAL FILM 33K 1% 1/4W
R24	S	1-214-557-00	METAL FILM 1K 1% 1/8W
R25	S	1-247-888-11	CARBON 240K 5% 1/4W
R26	S	1-214-549-00	METAL FILM 470 1% 1/8W
R27	S	1-214-533-00	METAL FILM 100 1% 1/8W
R28	S	1-247-887-00	CARBON 220K 5% 1/4W
R30	S	1-214-748-00	METAL FILM 6.2K 1% 1/4W
R31	S	1-214-581-00	METAL FILM 10K 1% 1/8W
R32	S	1-214-574-00	METAL FILM 5.1K 1% 1/8W
R33	S	1-214-581-00	METAL FILM 10K 1% 1/8W
R34	S	1-214-575-00	METAL FILM 5.6K 1% 1/8W
R35	S	1-218-197-11	METAL FILM 2.43K 1% 1/8W
R36	S	1-214-757-00	METAL FILM 15K 1% 1/4W
R37	S	1-214-564-00	METAL FILM 2K 1% 1/8W
R38	S	1-214-564-00	METAL FILM 2K 1% 1/8W
R39	S	1-214-573-00	METAL FILM 4.7K 1% 1/8W
R42	S	1-214-533-00	METAL FILM 100 1% 1/8W
R43	S	1-249-441-11	CARBON 100K 5% 1/4W
R44	S	1-214-545-00	METAL FILM 330 1% 1/8W
R45	S	1-215-826-11	METAL FILM 68K 1% 1/8W
R46	S	1-215-826-11	METAL FILM 68K 1% 1/8W
R47	S	1-218-194-11	METAL FILM 1.62K 1% 1/8W
R48	S	1-218-200-11	METAL FILM 3.74K 1% 1/8W
R49	S	1-218-201-11	METAL FILM 4.12K 1% 1/8W
R50	S	1-218-221-11	METAL FILM 40.2K 1% 1/8W
R51	S	1-214-760-00	METAL FILM 20K 1% 1/4W

Ref. No.	SP	SONY Parts No.	Description			
R52	S	1-214-760-00	METAL FILM	20K	1%	1/4W
R53	S	1-214-753-00	METAL FILM	10K	1%	1/4W
R54	S	1-218-213-11	METAL FILM	21K	1%	1/6W
R56	S	1-218-220-11	METAL FILM	39.2K	1%	1/6W
R57	S	1-214-760-00	METAL FILM	20K	1%	1/4W
R58	S	1-214-749-00	METAL FILM	6.8K	1%	1/4W
R59	S	1-214-549-00	METAL FILM	470	1%	1/8W
R60	S	1-214-760-00	METAL FILM	20K	1%	1/4W
R61	S	1-218-216-11	METAL FILM	28K	1%	1/8W
R62	S	1-214-736-00	METAL FILM	2K	1%	1/4W
R63	S	1-218-200-11	METAL FILM	3.74K	1%	1/8W
R64	S	1-218-194-11	METAL FILM	1.62K	1%	1/8W
R65	S	1-214-743-00	METAL FILM	3.9K	1%	1/4W
R66	S	1-214-557-00	METAL FILM	1K	1%	1/8W
R67	S	1-247-888-11	CARBON	240K	5%	1/4W
R68	S	1-214-572-00	METAL FILM	4.3K	1%	1/8W
R69	S	1-214-772-00	METAL FILM	62K	1%	1/4W
R70	S	1-214-573-00	METAL FILM	4.7K	1%	1/8W
R71	S	1-214-574-00	METAL FILM	5.1K	1%	1/8W
R73	S	1-214-557-00	METAL FILM	1K	1%	1/8W
R74	S	1-247-888-11	CARBON	240K	5%	1/4W
R75	S	1-215-822-11	METAL FILM	47K	1%	1/8W
R76	S	1-214-557-00	METAL FILM	1K	1%	1/8W
R77	S	1-214-772-00	METAL FILM	62K	1%	1/4W
R78	S	1-214-557-00	METAL FILM	1K	1%	1/8W
R79	S	1-214-573-00	METAL FILM	4.7K	1%	1/8W
R80	S	1-247-893-11	CARBON	390K	5%	1/4W
R81	S	1-215-827-11	METAL FILM	75K	1%	1/8W
R82	S	1-214-739-00	METAL FILM	2.7K	1%	1/4W
R83	S	1-249-441-11	CARBON	100K	5%	1/4W
R84	S	1-214-533-00	METAL FILM	100	1%	1/8W
R85	S	1-247-889-00	CARBON	270K	5%	1/4W
R86	S	1-214-773-00	METAL FILM	68K	1%	1/4W
R87	S	1-214-581-00	METAL FILM	10K	1%	1/8W
R88	S	1-214-753-00	METAL FILM	10K	1%	1/4W
R89	S	1-214-753-00	METAL FILM	10K	1%	1/4W
R90	S	1-214-746-00	METAL FILM	5.1K	1%	1/4W
R91	S	1-214-753-00	METAL FILM	10K	1%	1/4W
R92	S	1-214-746-00	METAL FILM	5.1K	1%	1/4W
R93	S	1-214-753-00	METAL FILM	10K	1%	1/4W
R94	S	1-214-746-00	METAL FILM	5.1K	1%	1/4W
R95	S	1-214-746-00	METAL FILM	5.1K	1%	1/4W
R96	S	1-214-578-00	METAL FILM	7.5K	1%	1/8W
R97	S	1-214-578-00	METAL FILM	7.5K	1%	1/8W
R98	S	1-214-753-00	METAL FILM	10K	1%	1/4W

Ref. No.	SP	SONY Parts No.	Description			
R99	S	1-214-753-00	METAL FILM	10K	1%	1/4W
R100	S	1-214-746-00	METAL FILM	5.1K	1%	1/4W
R101	S	1-214-753-00	METAL FILM	10K	1%	1/4W
R102	S	1-214-746-00	METAL FILM	5.1K	1%	1/4W
R103	S	1-214-753-00	METAL FILM	10K	1%	1/4W
R104	S	1-214-746-00	METAL FILM	5.1K	1%	1/4W
R105	S	1-214-746-00	METAL FILM	5.1K	1%	1/4W
R106	S	1-214-578-00	METAL FILM	7.5K	1%	1/8W
R107	S	1-214-578-00	METAL FILM	7.5K	1%	1/8W
R108	S	1-214-563-00	METAL FILM	1.8K	1%	1/8W
R109	S	1-214-567-00	METAL FILM	2.7K	1%	1/8W
R110	S	1-214-563-00	METAL FILM	1.8K	1%	1/8W
R111	S	1-214-567-00	METAL FILM	2.7K	1%	1/8W
R112	S	1-214-719-00	METAL FILM	390	1%	1/4W
R113	S	1-214-584-00	METAL FILM	13K	1%	1/8W
R114	S	1-214-719-00	METAL FILM	390	1%	1/4W
R115	S	1-214-581-00	METAL FILM	10K	1%	1/8W
R116	S	1-214-719-00	METAL FILM	390	1%	1/4W
R117	S	1-214-584-00	METAL FILM	13K	1%	1/8W
R118	S	1-214-719-00	METAL FILM	390	1%	1/4W
R119	S	1-214-581-00	METAL FILM	10K	1%	1/8W
R120	S	1-214-581-00	METAL FILM	10K	1%	1/8W
R121	S	1-214-565-00	METAL FILM	2.2K	1%	1/8W
R122	S	1-214-581-00	METAL FILM	10K	1%	1/8W
R123	S	1-214-574-00	METAL FILM	5.1K	1%	1/8W
R124	S	1-214-581-00	METAL FILM	10K	1%	1/8W
R125	S	1-214-565-00	METAL FILM	2.2K	1%	1/8W
R126	S	1-214-581-00	METAL FILM	10K	1%	1/8W
R127	S	1-214-574-00	METAL FILM	5.1K	1%	1/8W
R128	S	1-214-581-00	METAL FILM	10K	1%	1/8W
R129	S	1-214-574-00	METAL FILM	5.1K	1%	1/8W
R130	S	1-214-533-00	METAL FILM	100	1%	1/8W
R131	S	1-215-822-11	METAL FILM	47K	1%	1/8W
R132	S	1-214-533-00	METAL FILM	100	1%	1/8W
R133	S	1-218-203-11	METAL FILM	5.9K	1%	1/8W
R134	S	1-214-573-00	METAL FILM	4.7K	1%	1/8W
R135	S	1-214-593-00	METAL FILM	33K	1%	1/8W
R136	S	1-214-577-00	METAL FILM	6.8K	1%	1/8W
R137	S	1-214-573-00	METAL FILM	4.7K	1%	1/8W
R138	S	1-214-573-00	METAL FILM	4.7K	1%	1/8W
R139	S	1-214-574-00	METAL FILM	5.1K	1%	1/8W
R140	S	1-215-822-11	METAL FILM	47K	1%	1/8W
R141	S	1-214-573-00	METAL FILM	4.7K	1%	1/8W
R142	S	1-249-482-11	CARBON	4.7	5%	1/2W
R143	S	1-249-482-11	CARBON	4.7	5%	1/2W

Ref. No.	SP	SONY Parts No.	Description
R144	S	1-206-456-00	CARBON 5.1 5% 1/2W
R145	S	1-206-456-00	CARBON 5.1 5% 1/2W
R146	S	1-215-822-11	METAL FILM 47K 1% 1/8W
R147	S	1-215-822-11	METAL FILM 47K 1% 1/8W
R148	S	1-215-822-11	METAL FILM 47K 1% 1/8W
R149	S	1-215-822-11	METAL FILM 47K 1% 1/8W
R150	S	1-214-585-00	METAL FILM 15K 1% 1/8W
R151	S	1-214-574-00	METAL FILM 5.1K 1% 1/8W
R152	S	1-214-574-00	METAL FILM 5.1K 1% 1/8W
R153	S	1-214-587-00	METAL FILM 18K 1% 1/8W
R154	S	1-214-738-00	METAL FILM 2.4K 1% 1/4W
R156	S	1-214-545-00	METAL FILM 330 1% 1/8W
R157 R158	S	1-214-757-00	METAL FILM 15K PAIR
R159 R160	S	1-216-786-11	METAL FILM 180 PAIR
R161	S	1-214-743-00	METAL FILM 3.9K 1% 1/4W
R162 R163	S	1-216-787-11	METAL FILM 5.1K PAIR
R164 R165	S	1-216-787-11	METAL FILM 5.1K PAIR
R166	S	1-214-589-00	METAL FILM 22K 1% 1/8W
R169	S	1-214-557-00	METAL FILM 1K 1% 1/8W
R170	S	1-214-557-00	METAL FILM 1K 1% 1/8W
R171	S	1-247-888-11	METAL FILM 240K 5% 1/4W
R172	S	1-214-738-00	METAL FILM 2.4K 1% 1/4W
R173	S	1-214-581-00	METAL FILM 10K 1% 1/8W
R174	S	1-214-553-00	METAL FILM 680 1% 1/8W
R175	S	1-214-574-00	METAL FILM 5.1K 1% 1/8W
R176	S	1-214-574-00	METAL FILM 5.1K 1% 1/8W
R177	S	1-214-573-00	METAL FILM 4.7K 1% 1/8W
R178	S	1-218-213-11	METAL FILM 21K 1% 1/8W
R179	S	1-218-228-11	METAL FILM 140K 1% 1/8W
R180	S	1-214-564-11	METAL FILM 2K 1% 1/8W
R181	S	1-214-581-00	METAL FILM 10K 1% 1/8W
R182	S	1-214-581-00	METAL FILM 10K 1% 1/8W
R183	S	1-215-830-11	METAL FILM 100K 1% 1/8W
R184	S	1-215-830-11	METAL FILM 100K 1% 1/8W
RV1	S	1-237-521-21	ADJ,METAL FILM 100K
RV2	S	1-237-514-21	ADJ,METAL FILM 500
RV3	S	1-237-518-21	ADJ,METAL FILM 10K
RV4	S	1-230-838-11	ADJ,METAL FILM 200
RV5	S	1-230-838-11	ADJ,METAL FILM 200

Ref. No.	SP	SONY Parts No.	Description
CNX BOARD		(1-619-162-11)	
	O	A-7850-339-A	COMPLETE PCB,CNX
		(This assembly includes the following parts.)	
	S	1-561-832-00	SOCKET,SHORT
	O	1-937-551-12	HARNESS (CNX-LNT)
C1	S	1-124-584-00	ELECT 100MF 20% 10V
C2	S	1-126-096-11	ELECT 10MF 20% 25V
C3	S	1-126-096-11	ELECT 10MF 20% 25V
C4	S	1-161-485-00	CERAMIC 0.1MF 50V
C5	S	1-162-734-11	CERAMIC 0.001MF 10% 50V
C6	S	1-162-734-11	CERAMIC 0.001MF 10% 50V
C7	S	1-161-485-00	CERAMIC 0.1MF 50V
C8	S	1-161-485-00	CERAMIC 0.1MF 50V
C9	S	1-161-485-00	CERAMIC 0.1MF 50V
C10	S	1-161-485-00	CERAMIC 0.1MF 50V
C11	S	1-161-485-00	CERAMIC 0.1MF 50V
C12	S	1-161-485-00	CERAMIC 0.1MF 50V
C13	S	1-161-485-00	CERAMIC 0.1MF 50V
C14	S	1-161-485-00	CERAMIC 0.1MF 50V
C15	S	1-161-485-00	CERAMIC 0.1MF 50V
C16	S	1-161-485-00	CERAMIC 0.1MF 50V
C17	S	1-162-665-11	CERAMIC 5600PF 10% 50V
C18	S	1-162-734-11	CERAMIC 0.001MF 10% 50V
C19	S	1-162-734-11	CERAMIC 0.001MF 10% 50V
C20	S	1-124-282-00	ELECT 22MF 20% 16V
C21	S	1-124-282-00	ELECT 22MF 20% 16V
C22	S	1-161-485-00	CERAMIC 0.1MF 50V
C23	S	1-161-485-00	CERAMIC 0.1MF 50V
C24	S	1-162-665-11	CERAMIC 5600PF 10% 50V
C25	S	1-162-665-11	CERAMIC 5600PF 10% 50V
C26	S	1-161-485-00	CERAMIC 0.1MF 50V
C27	S	1-161-485-00	CERAMIC 0.1MF 50V
C28	S	1-161-485-00	CERAMIC 0.1MF 50V
C29	S	1-161-485-00	CERAMIC 0.1MF 50V
C30	S	1-161-485-00	CERAMIC 0.1MF 50V
C31	S	1-161-485-00	CERAMIC 0.1MF 50V
C32	S	1-161-485-00	CERAMIC 0.1MF 50V
C33	S	1-161-485-00	CERAMIC 0.1MF 50V
C34	S	1-161-485-00	CERAMIC 0.1MF 50V
C35	S	1-161-485-00	CERAMIC 0.1MF 50V

Ref. No.	SP	SONY Parts No.	Description
C36	S	1-161-485-00	CERAMIC 0.1MF 50V
C37	S	1-161-485-00	CERAMIC 0.1MF 50V
C38	S	1-161-485-00	CERAMIC 0.1MF 50V
C39	S	1-161-485-00	CERAMIC 0.1MF 50V
C40	S	1-161-485-00	CERAMIC 0.1MF 50V
C41	S	1-161-485-00	CERAMIC 0.1MF 50V
C42	S	1-161-485-00	CERAMIC 0.1MF 50V
C43	S	1-161-485-00	CERAMIC 0.1MF 50V
C44	S	1-161-485-00	CERAMIC 0.1MF 50V
C45	S	1-161-485-00	CERAMIC 0.1MF 50V
C46	S	1-161-485-00	CERAMIC 0.1MF 50V
CNJ451	O	1-506-903-11	CONNECTOR 16P
CNJ453	O	1-560-303-00	POST HEADER (IL CONNECTOR) 6P
CNJ454	O	1-560-300-00	POST HEADER (IL CONNECTOR) 3P
CNJ455	O	1-560-300-00	POST HEADER (IL CONNECTOR) 3P
CNJ800	S	1-563-893-21	CONNECTOR SOCKET 50P
CNJ801	S	1-563-890-21	CONNECTOR SOCKET 9P
CNJ802	S	1-563-890-21	CONNECTOR SOCKET 9P
D1	S	8-719-911-19	1SS119
D2	S	8-719-911-19	1SS119
D4	S	8-719-940-03	1N4004
D5	S	8-719-911-19	1SS119
D6	S	8-719-911-19	1SS119
D7	S	8-719-911-19	1SS119
D8	S	8-719-911-19	1SS119
D9	S	8-719-911-19	1SS119
D10	S	8-719-911-19	1SS119
D11	S	8-719-911-19	1SS119
D12	S	8-719-911-19	1SS119
D13	S	8-719-911-19	1SS119
D14	S	8-719-911-19	1SS119
D15	S	8-719-911-19	1SS119
D16	S	8-719-911-19	1SS119
D17	S	8-719-911-19	1SS119
D18	S	8-719-911-19	1SS119
D19	S	8-719-911-19	1SS119
D20	S	8-719-911-19	1SS119
D21	S	8-719-911-19	1SS119
D22	S	8-719-911-19	1SS119
D23	S	8-719-911-19	1SS119
D24	S	8-719-911-19	1SS119
D25	S	8-719-911-19	1SS119
D26	S	8-719-911-19	1SS119

Ref. No.	SP	SONY Parts No.	Description
D27	S	8-719-911-19	1SS119
D28	S	8-719-911-19	1SS119
D29	S	8-719-911-19	1SS119
D30	S	8-719-911-19	1SS119
D31	S	8-719-911-19	1SS119
D32	S	8-719-911-19	1SS119
D33	S	8-719-911-19	1SS119
D34	S	8-719-911-19	1SS119
D35	S	8-719-109-85	RD5.1ES-B2
D36	S	8-719-109-85	RD5.1ES-B2
D37	S	8-719-109-85	RD5.1ES-B2
D38	S	8-719-109-85	RD5.1ES-B2
D39	S	8-719-109-85	RD5.1ES-B2
D40	S	8-719-109-85	RD5.1ES-B2
D41	S	8-719-109-85	RD5.1ES-B2
D42	S	8-719-109-85	RD5.1ES-B2
D43	S	8-719-109-85	RD5.1ES-B2
D44	S	8-719-109-85	RD5.1ES-B2
D45	S	8-719-109-85	RD5.1ES-B2
D46	S	8-719-109-85	RD5.1ES-B2
D47	S	8-719-109-85	RD5.1ES-B2
D48	S	8-719-109-85	RD5.1ES-B2
D49	S	8-719-109-85	RD5.1ES-B2
D50	S	8-719-109-85	RD5.1ES-B2
F1	S	T-9410-119-1	PICO FUSE 1A 125V
F2	S	T-9410-119-1	PICO FUSE 1A 125V
IC1	S	8-759-202-56	TC74HC245P
IC2	S	8-759-202-16	TC74HC11P
IC3	S	8-759-100-88	uPD8279C-5
IC4	S	8-759-202-26	TC74HC138P
IC5	S	8-759-903-73	SN74LS373N
IC6	S	8-759-903-73	SN74LS373N
IC7	S	8-719-939-12	HCPL-2531
IC8	S	8-759-202-24	TC74HC86P
IC9	S	8-759-910-83	TL072ACP
IC10	S	8-759-990-04	TL074CN
IC11	S	8-759-909-33	LM311P
IC12	S	8-759-909-33	LM311P
IC13	S	8-759-990-04	TL074CN
IC14	S	T-9412-418-1	DLO-3
IC15	S	8-759-926-32	AM26LS32PC

Ref. No.	SP	SONY Parts No.	Description
IC16	S	8-759-926-31	AM26LS31PC
IC17	S	8-759-900-04	SN74LS04N
IC18	S	8-759-202-74	TC74HC04P
IC19	S	8-759-202-74	TC74HC04P
IC20	S	8-719-901-98	PC713
IC21	S	8-719-901-98	PC713
IC22	S	8-719-901-98	PC713
IC23	S	8-719-901-98	PC713
IC24	S	8-719-901-98	PC713
IC25	S	8-719-901-98	PC713
IC26	S	8-719-901-98	PC713
IC27	S	8-719-901-98	PC713
IC28	S	8-719-901-98	PC713
IC29	S	8-719-901-98	PC713
IC30	S	8-719-901-98	PC713
IC31	S	8-719-901-98	PC713
IC32	S	8-719-901-98	PC713
IC33	S	8-719-901-98	PC713
JU1	S	1-566-388-11	PIN,SHORT
JU2	S	1-566-388-11	PIN,SHORT
JU3	S	1-566-388-11	PIN,SHORT
JU4	S	1-566-388-11	PIN,SHORT
JU5	S	1-566-388-11	PIN,SHORT
JU6	S	1-566-388-11	PIN,SHORT
JU7	S	1-566-388-11	PIN,SHORT
K1	S	1-515-670-11	RELAY,P.C. MOUNT
K2	S	1-515-670-11	RELAY,P.C. MOUNT
K3	S	1-515-670-11	RELAY,P.C. MOUNT
K4	S	1-515-670-11	RELAY,P.C. MOUNT
Q1	S	8-729-139-04	2N3904
Q2	S	8-729-139-04	2N3904
Q3	S	T-9410-287-1	SP7000-0127-02
Q4	S	8-729-904-15	VN10KM
Q5	S	8-729-904-15	VN10KM
R1	S	1-249-429-11	CARBON 10K 5% 1/4W
R2	S	1-249-417-11	CARBON 1K 5% 1/4W
R3	S	1-249-426-11	CARBON 5.6K 5% 1/4W
R4	S	1-249-413-11	CARBON 470 5% 1/4W
R5	S	1-249-413-11	CARBON 470 5% 1/4W
R6	S	1-249-441-11	CARBON 100K 5% 1/4W
R7	S	1-249-429-11	CARBON 10K 5% 1/4W
R8	S	1-247-903-00	CARBON 1M 5% 1/4W
R9	S	1-247-903-00	CARBON 1M 5% 1/4W
R10	S	1-247-903-00	CARBON 1M 5% 1/4W

Ref. No.	SP	SONY Parts No.	Description			
R11	S	1-249-441-11	CARBON	100K	5%	1/4W
R12	S	1-249-441-11	CARBON	100K	5%	1/4W
R13	S	1-214-581-00	METAL FILM	10K	1%	1/8W
R14	S	1-214-581-00	METAL FILM	10K	1%	1/8W
R15	S	1-214-581-00	METAL FILM	10K	1%	1/8W
R16	S	1-214-581-00	METAL FILM	10K	1%	1/8W
R17	S	1-249-405-11	CARBON	100	5%	1/4W
R18	S	1-249-429-11	CARBON	10K	5%	1/4W
R19	S	1-249-429-11	CARBON	10K	5%	1/4W
R20	S	1-247-903-00	CARBON	1M	5%	1/4W
R21	S	1-249-429-11	CARBON	10K	5%	1/4W
R22	S	1-249-429-11	CARBON	10K	5%	1/4W
R23	S	1-249-405-11	CARBON	100	5%	1/4W
R24	S	1-249-405-11	CARBON	100	5%	1/4W
R25	S	1-214-581-00	METAL FILM	10K	1%	1/8W
R26	S	1-214-581-00	METAL FILM	10K	1%	1/8W
R27	S	1-214-581-00	METAL FILM	10K	1%	1/8W
R28	S	1-214-581-00	METAL FILM	10K	1%	1/8W
R29	S	1-249-441-11	CARBON	100K	5%	1/4W
R30	S	1-249-441-11	CARBON	100K	5%	1/4W
R31	S	1-249-441-11	CARBON	100K	5%	1/4W
R32	S	1-249-441-11	CARBON	100K	5%	1/4W
R33	S	1-249-426-11	CARBON	5.6K	5%	1/4W
R34	S	1-249-441-11	CARBON	100K	5%	1/4W
R35	S	1-249-441-11	CARBON	100K	5%	1/4W
R36	S	1-249-417-11	CARBON	1K	5%	1/4W
R37	S	1-249-417-11	CARBON	1K	5%	1/4W
R38	S	1-249-441-11	CARBON	100K	5%	1/4W
R39	S	1-249-426-11	CARBON	5.6K	5%	1/4W
R40	S	1-249-441-11	CARBON	100K	5%	1/4W
R41	S	1-249-441-11	CARBON	100K	5%	1/4W
R42	S	1-249-441-11	CARBON	100K	5%	1/4W
R43	S	1-249-441-11	CARBON	100K	5%	1/4W
R44	S	1-249-441-11	CARBON	100K	5%	1/4W
R45	S	1-214-581-00	METAL FILM	10K	1%	1/8W
R46	S	1-214-581-00	METAL FILM	10K	1%	1/8W
R47	S	1-214-581-00	METAL FILM	10K	1%	1/8W
R48	S	1-214-581-00	METAL FILM	10K	1%	1/8W
R49	S	1-249-406-11	CARBON	120	5%	1/4W
R50	S	1-249-429-11	CARBON	10K	5%	1/4W
R51	S	1-249-426-11	CARBON	5.6K	5%	1/4W
R52	S	1-249-426-11	CARBON	5.6K	5%	1/4W
R53	S	1-247-701-11	CARBON	120	5%	1/4W
R54	S	1-247-701-11	CARBON	120	5%	1/4W
R55	S	1-249-429-11	CARBON	10K	5%	1/4W

Ref. No.	SP	SONY Parts No.	Description
R56	S	1-249-429-11	CARBON 10K 5% 1/4W
R57	S	1-249-426-11	CARBON 5.6K 5% 1/4W
R58	S	1-249-406-11	CARBON 120 5% 1/4W
R59	S	1-249-426-11	CARBON 5.6K 5% 1/4W
R60	S	1-249-406-11	CARBON 120 5% 1/4W
R61	S	1-249-413-11	CARBON 470 5% 1/4W
R62	S	1-249-413-11	CARBON 470 5% 1/4W
R63	S	1-249-413-11	CARBON 470 5% 1/4W
R64	S	1-249-413-11	CARBON 470 5% 1/4W
R65	S	1-249-413-11	CARBON 470 5% 1/4W
R66	S	1-249-413-11	CARBON 470 5% 1/4W
R67	S	1-249-413-11	CARBON 470 5% 1/4W
R68	S	1-249-441-11	CARBON 100K 5% 1/4W
R69	S	1-249-426-11	CARBON 5.6K 5% 1/4W
R70	S	1-249-413-11	CARBON 470 5% 1/4W
R71	S	1-249-413-11	CARBON 470 5% 1/4W
R72	S	1-249-413-11	CARBON 470 5% 1/4W
R73	S	1-249-413-11	CARBON 470 5% 1/4W
R74	S	1-249-413-11	CARBON 470 5% 1/4W
R75	S	1-249-413-11	CARBON 470 5% 1/4W
R76	S	1-249-413-11	CARBON 470 5% 1/4W
R77	S	1-249-393-11	CARBON 10 5% 1/4W
R78	S	1-249-393-11	CARBON 10 5% 1/4W
R79	S	1-249-426-11	CARBON 5.6K 5% 1/4W
R80	S	1-249-425-11	CARBON 4.7K 5% 1/4W
R81	S	1-249-425-11	CARBON 4.7K 5% 1/4W
R82	S	1-249-426-11	CARBON 5.6K 5% 1/4W
R83	S	1-249-426-11	CARBON 5.6K 5% 1/4W
RN2	S	1-231-409-00	RESISTOR BLOCK,5.6K
RN3	S	1-231-527-11	RESISTOR BLOCK,5.6Kx4
RN4	S	1-231-409-00	RESISTOR BLOCK,5.6K
RV1	S	1-237-514-21	ADJ,METAL FILM 500
RV2	S	1-237-518-21	ADJ,METAL FILM 10K
RV3	S	1-237-520-21	ADJ,METAL FILM 50K

Ref. No.	SP	SONY Parts No.	Description
CNX BOARD		(1-619-162-12)	
	O	A-7850-339-B	COMPLETE PCB,CNX (This assembly includes the following parts.)
	S	1-561-832-00	SOCKET,SHORT
C1	S	1-124-584-00	ELECT 100MF 20% 10V
C2	S	1-126-096-11	ELECT 10MF 20% 25V
C3	S	1-126-096-11	ELECT 10MF 20% 25V
C4	S	1-161-485-00	CERAMIC 0.1MF 50V
C5	S	1-162-734-11	CERAMIC 0.001MF 10% 50V
C6	S	1-162-734-11	CERAMIC 0.001MF 10% 50V
C7	S	1-161-485-00	CERAMIC 0.1MF 50V
C8	S	1-161-485-00	CERAMIC 0.1MF 50V
C9	S	1-161-485-00	CERAMIC 0.1MF 50V
C10	S	1-161-485-00	CERAMIC 0.1MF 50V
C11	S	1-161-485-00	CERAMIC 0.1MF 50V
C12	S	1-161-485-00	CERAMIC 0.1MF 50V
C13	S	1-161-485-00	CERAMIC 0.1MF 50V
C14	S	1-161-485-00	CERAMIC 0.1MF 50V
C15	S	1-161-485-00	CERAMIC 0.1MF 50V
C16	S	1-161-485-00	CERAMIC 0.1MF 50V
C17	S	1-162-665-11	CERAMIC 5600PF 10% 50V
C18	S	1-162-734-11	CERAMIC 0.001MF 10% 50V
C19	S	1-162-734-11	CERAMIC 0.001MF 10% 50V
C20	S	1-124-282-00	ELECT 22MF 20% 16V
C21	S	1-124-282-00	ELECT 22MF 20% 16V
C22	S	1-161-485-00	CERAMIC 0.1MF 50V
C23	S	1-161-485-00	CERAMIC 0.1MF 50V
C24	S	1-162-665-11	CERAMIC 5600PF 10% 50V
C25	S	1-162-665-11	CERAMIC 5600PF 10% 50V
C26	S	1-161-485-00	CERAMIC 0.1MF 50V
C27	S	1-161-485-00	CERAMIC 0.1MF 50V
C28	S	1-161-485-00	CERAMIC 0.1MF 50V
C29	S	1-161-485-00	CERAMIC 0.1MF 50V
C30	S	1-161-485-00	CERAMIC 0.1MF 50V
C31	S	1-161-485-00	CERAMIC 0.1MF 50V
C32	S	1-161-485-00	CERAMIC 0.1MF 50V
C33	S	1-161-485-00	CERAMIC 0.1MF 50V
C34	S	1-161-485-00	CERAMIC 0.1MF 50V
C35	S	1-161-485-00	CERAMIC 0.1MF 50V

Ref. No.	SP	SONY Parts No.	Description
C36	S	1-161-485-00	CERAMIC 0.1MF 50V
C37	S	1-161-485-00	CERAMIC 0.1MF 50V
C38	S	1-161-485-00	CERAMIC 0.1MF 50V
C39	S	1-161-485-00	CERAMIC 0.1MF 50V
C40	S	1-161-485-00	CERAMIC 0.1MF 50V
C41	S	1-161-485-00	CERAMIC 0.1MF 50V
C42	S	1-161-485-00	CERAMIC 0.1MF 50V
C43	S	1-161-485-00	CERAMIC 0.1MF 50V
C44	S	1-161-485-00	CERAMIC 0.1MF 50V
C45	S	1-161-485-00	CERAMIC 0.1MF 50V
C46	S	1-161-485-00	CERAMIC 0.1MF 50V
C47	S	1-161-485-00	CERAMIC 0.1MF 50V
C48	S	1-126-096-11	ELECT 10MF 20% 25V
CNJ450	O	1-937-551-12	HARNESS (CNX-LNT)
CNJ451	O	1-506-903-11	CONNECTOR 16P
CNJ453	O	1-560-303-00	POST HEADER (IL CONNECTOR) 6P
CNJ454	O	1-560-300-00	POST HEADER (IL CONNECTOR) 3P
CNJ455	O	1-560-300-00	POST HEADER (IL CONNECTOR) 3P
CNJ456	O	1-564-693-21	CONNECTOR, RIBBON CABLE 10P
CNJ800	S	1-563-894-21	CONNECTOR SOCKET 50P
CNJ801	S	1-563-890-21	CONNECTOR SOCKET 9P
CNJ802	S	1-563-890-21	CONNECTOR SOCKET 9P
D1	S	8-719-911-19	1SS119
D2	S	8-719-911-19	1SS119
D4	S	8-719-940-03	1N4004
D5	S	8-719-911-19	1SS119
D6	S	8-719-911-19	1SS119
D7	S	8-719-911-19	1SS119
D8	S	8-719-911-19	1SS119
D9	S	8-719-911-19	1SS119
D10	S	8-719-911-19	1SS119
D11	S	8-719-911-19	1SS119
D12	S	8-719-911-19	1SS119
D13	S	8-719-911-19	1SS119
D14	S	8-719-911-19	1SS119
D15	S	8-719-911-19	1SS119
D16	S	8-719-911-19	1SS119
D17	S	8-719-911-19	1SS119
D18	S	8-719-911-19	1SS119
D19	S	8-719-911-19	1SS119
D20	S	8-719-911-19	1SS119
D21	S	8-719-911-19	1SS119
D22	S	8-719-911-19	1SS119
D23	S	8-719-911-19	1SS119
D24	S	8-719-911-19	1SS119
D25	S	8-719-911-19	1SS119
D26	S	8-719-911-19	1SS119

Ref. No.	SP	SONY Parts No.	Description
D27	S	8-719-911-19	1SS119
D28	S	8-719-911-19	1SS119
D29	S	8-719-911-19	1SS119
D30	S	8-719-911-19	1SS119
D31	S	8-719-911-19	1SS119
D32	S	8-719-911-19	1SS119
D33	S	8-719-911-19	1SS119
D34	S	8-719-911-19	1SS119
D35	S	8-719-109-85	RD5.1ES-B2
D36	S	8-719-109-85	RD5.1ES-B2
D37	S	8-719-109-85	RD5.1ES-B2
D38	S	8-719-109-85	RD5.1ES-B2
D39	S	8-719-109-85	RD5.1ES-B2
D40	S	8-719-109-85	RD5.1ES-B2
D41	S	8-719-109-85	RD5.1ES-B2
D42	S	8-719-109-85	RD5.1ES-B2
D43	S	8-719-109-85	RD5.1ES-B2
D44	S	8-719-109-85	RD5.1ES-B2
D45	S	8-719-109-85	RD5.1ES-B2
D46	S	8-719-109-85	RD5.1ES-B2
D47	S	8-719-109-85	RD5.1ES-B2
D48	S	8-719-109-85	RD5.1ES-B2
D49	S	8-719-109-85	RD5.1ES-B2
D50	S	8-719-109-85	RD5.1ES-B2
IC1	S	8-759-202-56	TC74HC245P
IC2	S	8-759-202-16	TC74HC11P
IC3	S	8-759-100-88	uPD8279C-5
IC4	S	8-759-202-26	TC74HC138P
IC5	S	8-759-903-73	SN74LS373N
IC6	S	8-759-903-73	SN74LS373N
IC7	S	8-719-939-12	HCPL-2531
IC8	S	8-759-202-24	TC74HC86P
IC9	S	8-759-910-83	TL072ACP
IC10	S	8-759-990-04	TL074CN
IC11	S	8-759-909-33	LM311P
IC12	S	8-759-909-33	LM311P
IC13	S	8-759-990-04	TL074CN
IC14	S	T-9412-418-1	DLO-3
IC15	S	8-759-926-32	AM26LS32PC

Ref. No.	SP	SONY Parts No.	Description
IC16	S	8-759-926-31	AM26LS31PC
IC17	S	8-759-900-04	SN74LS04N
IC18	S	8-759-202-74	TC74HC04P
IC19	S	8-759-202-74	TC74HC04P
IC20	S	8-719-901-98	PC713
IC21	S	8-719-901-98	PC713
IC22	S	8-719-901-98	PC713
IC23	S	8-719-901-98	PC713
IC24	S	8-719-901-98	PC713
IC25	S	8-719-901-98	PC713
IC26	S	8-719-901-98	PC713
IC27	S	8-719-901-98	PC713
IC28	S	8-719-901-98	PC713
IC29	S	8-719-901-98	PC713
IC30	S	8-719-901-98	PC713
IC31	S	8-719-901-98	PC713
IC32	S	8-719-901-98	PC713
IC33	S	8-719-901-98	PC713
IC34	S	8-759-171-05	uPC7805H
JU1	S	1-566-388-11	PIN,SHORT
JU2	S	1-566-388-11	PIN,SHORT
JU3	S	1-566-388-11	PIN,SHORT
JU4	S	1-566-388-11	PIN,SHORT
JU7	S	1-566-388-11	PIN,SHORT
JU8	S	1-566-388-11	PIN,SHORT
K1	S	1-515-670-11	RELAY,P.C. MOUNT
K2	S	1-515-670-11	RELAY,P.C. MOUNT
K3	S	1-515-670-11	RELAY,P.C. MOUNT
K4	S	1-515-670-11	RELAY,P.C. MOUNT
Q1	S	8-729-139-04	2N3904
Q2	S	8-729-139-04	2N3904
Q3	S	T-9410-287-1	SP7000-0127-02
Q4	S	8-729-904-15	VN10KM
Q5	S	8-729-904-15	VN10KM
R1	S	1-249-429-11	CARBON 10K 5% 1/4W
R2	S	1-249-417-11	CARBON 1K 5% 1/4W
R3	S	1-249-426-11	CARBON 5.6K 5% 1/4W
R4	S	1-249-413-11	CARBON 470 5% 1/4W
R5	S	1-249-413-11	CARBON 470 5% 1/4W
R6	S	1-249-441-11	CARBON 100K 5% 1/4W
R7	S	1-249-429-11	CARBON 10K 5% 1/4W
R8	S	1-247-903-00	CARBON 1M 5% 1/4W
R9	S	1-247-903-00	CARBON 1M 5% 1/4W
R10	S	1-247-903-00	CARBON 1M 5% 1/4W

Ref. No.	SP	SONY Parts No.	Description			
R11	S	1-249-441-11	CARBON	100K	5%	1/4W
R12	S	1-249-441-11	CARBON	100K	5%	1/4W
R13	S	1-214-581-00	METAL FILM	10K	1%	1/8W
R14	S	1-214-581-00	METAL FILM	10K	1%	1/8W
R15	S	1-214-581-00	METAL FILM	10K	1%	1/8W
R16	S	1-214-581-00	METAL FILM	10K	1%	1/8W
R17	S	1-249-405-11	CARBON	100	5%	1/4W
R18	S	1-249-429-11	CARBON	10K	5%	1/4W
R19	S	1-249-429-11	CARBON	10K	5%	1/4W
R20	S	1-247-903-00	CARBON	1M	5%	1/4W
R21	S	1-249-429-11	CARBON	10K	5%	1/4W
R22	S	1-249-429-11	CARBON	10K	5%	1/4W
R23	S	1-249-405-11	CARBON	100	5%	1/4W
R24	S	1-249-405-11	CARBON	100	5%	1/4W
R25	S	1-214-581-00	METAL FILM	10K	1%	1/8W
R26	S	1-214-581-00	METAL FILM	10K	1%	1/8W
R27	S	1-214-581-00	METAL FILM	10K	1%	1/8W
R28	S	1-214-581-00	METAL FILM	10K	1%	1/8W
R29	S	1-249-441-11	CARBON	100K	5%	1/4W
R30	S	1-249-441-11	CARBON	100K	5%	1/4W
R31	S	1-249-441-11	CARBON	100K	5%	1/4W
R32	S	1-249-441-11	CARBON	100K	5%	1/4W
R33	S	1-249-426-11	CARBON	5.6K	5%	1/4W
R34	S	1-249-441-11	CARBON	100K	5%	1/4W
R35	S	1-249-441-11	CARBON	100K	5%	1/4W
R36	S	1-249-417-11	CARBON	1K	5%	1/4W
R37	S	1-249-417-11	CARBON	1K	5%	1/4W
R38	S	1-249-441-11	CARBON	100K	5%	1/4W
R39	S	1-249-426-11	CARBON	5.6K	5%	1/4W
R40	S	1-249-441-11	CARBON	100K	5%	1/4W
R41	S	1-249-441-11	CARBON	100K	5%	1/4W
R42	S	1-249-441-11	CARBON	100K	5%	1/4W
R43	S	1-249-441-11	CARBON	100K	5%	1/4W
R44	S	1-249-441-11	CARBON	100K	5%	1/4W
R45	S	1-214-581-00	METAL FILM	10K	1%	1/8W
R46	S	1-214-581-00	METAL FILM	10K	1%	1/8W
R47	S	1-214-581-00	METAL FILM	10K	1%	1/8W
R48	S	1-214-581-00	METAL FILM	10K	1%	1/8W
R49	S	1-249-406-11	CARBON	120	5%	1/4W
R50	S	1-249-429-11	CARBON	10K	5%	1/4W
R51	S	1-249-426-11	CARBON	5.6K	5%	1/4W
R52	S	1-249-426-11	CARBON	5.6K	5%	1/4W
R53	S	1-247-701-11	CARBON	120	5%	1/4W
R54	S	1-247-701-11	CARBON	120	5%	1/4W
R55	S	1-249-429-11	CARBON	10K	5%	1/4W

Ref. No.	SP	SONY Parts No.	Description
R56	S	1-249-429-11	CARBON 10K 5% 1/4W
R57	S	1-249-426-11	CARBON 5.6K 5% 1/4W
R58	S	1-249-406-11	CARBON 120 5% 1/4W
R59	S	1-249-426-11	CARBON 5.6K 5% 1/4W
R60	S	1-249-406-11	CARBON 120 5% 1/4W
R61	S	1-249-413-11	CARBON 470 5% 1/4W
R62	S	1-249-413-11	CARBON 470 5% 1/4W
R63	S	1-249-413-11	CARBON 470 5% 1/4W
R64	S	1-249-413-11	CARBON 470 5% 1/4W
R65	S	1-249-413-11	CARBON 470 5% 1/4W
R66	S	1-249-413-11	CARBON 470 5% 1/4W
R67	S	1-249-413-11	CARBON 470 5% 1/4W
R68	S	1-249-441-11	CARBON 100K 5% 1/4W
R69	S	1-249-426-11	CARBON 5.6K 5% 1/4W
R70	S	1-249-413-11	CARBON 470 5% 1/4W
R71	S	1-249-413-11	CARBON 470 5% 1/4W
R72	S	1-249-413-11	CARBON 470 5% 1/4W
R73	S	1-249-413-11	CARBON 470 5% 1/4W
R74	S	1-249-413-11	CARBON 470 5% 1/4W
R75	S	1-249-413-11	CARBON 470 5% 1/4W
R76	S	1-249-413-11	CARBON 470 5% 1/4W
R77	S	1-249-393-11	CARBON 10 5% 1/4W
R78	S	1-249-393-11	CARBON 10 5% 1/4W
R79	S	1-249-426-11	CARBON 5.6K 5% 1/4W
R80	S	1-249-425-11	CARBON 4.7K 5% 1/4W
R81	S	1-249-425-11	CARBON 4.7K 5% 1/4W
R82	S	1-249-426-11	CARBON 5.6K 5% 1/4W
R83	S	1-249-426-11	CARBON 5.6K 5% 1/4W
R84	S	1-247-728-11	CARBON 12 5% 1/2W
RN2	S	1-231-409-00	RESISTOR BLOCK,5.6K
RN3	S	1-231-527-11	RESISTOR BLOCK,5.6Kx4
RN4	S	1-231-409-00	RESISTOR BLOCK,5.6K
RV1	S	1-237-514-21	ADJ,METAL FILM 500
RV2	S	1-237-518-21	ADJ,METAL FILM 10K
RV3	S	1-237-520-21	ADJ,METAL FILM 50K

Ref. No.	SP	SONY Parts No.	Description
CPU BOARD		(1-619-161-11)	
	O	A-7850-358-A	COMPLETE PCB,CPU (For APR-5002A) (This assembly includes the following parts.)
	S	1-561-832-00	SOCKET,SHORT
B1	O	T-9413-327-1	LITHIUM BATTERY
C1	S	1-124-584-00	ELECT 100MF 20% 10V
C2	S	1-123-357-00	ELECT 22MF 20% 35V
C3	S	1-123-357-00	ELECT 22MF 20% 35V
C4	S	1-124-902-00	ELECT 0.47MF 20% 50V
C5	S	1-130-471-00	PE TEREPHTHALATE 0.001MF 5% 50V
C6	S	1-162-667-11	CERAMIC 10PF 5% 50V
C7	S	1-162-667-11	CERAMIC 10PF 5% 50V
C8	S	1-130-471-00	PE TEREPHTHALATE 0.001MF 5% 50V
C9	S	1-161-896-11	CERAMIC 0.22MF 50V
C10	S	1-130-471-00	PE TEREPHTHALATE 0.001MF 5% 50V
C11	S	1-130-471-00	PE TEREPHTHALATE 0.001MF 5% 50V
C12	S	1-161-485-00	CERAMIC 0.1MF 50V
C13	S	1-161-485-00	CERAMIC 0.1MF 50V
C14	S	1-130-471-00	PE TEREPHTHALATE 0.001MF 5% 50V
C15	S	1-130-471-00	PE TEREPHTHALATE 0.001MF 5% 50V
C16	S	1-161-485-00	CERAMIC 0.1MF 50V
C17	S	1-161-485-00	CERAMIC 0.1MF 50V
C18	S	1-161-485-00	CERAMIC 0.1MF 50V
C19	S	1-161-485-00	CERAMIC 0.1MF 50V
C20	S	1-161-485-00	CERAMIC 0.1MF 50V
C21	S	1-161-485-00	CERAMIC 0.1MF 50V
C22	S	1-161-485-00	CERAMIC 0.1MF 50V
C23	S	1-161-485-00	CERAMIC 0.1MF 50V
C24	S	1-161-485-00	CERAMIC 0.1MF 50V
C25	S	1-161-485-00	CERAMIC 0.1MF 50V
C26	S	1-161-485-00	CERAMIC 0.1MF 50V
C27	S	1-161-485-00	CERAMIC 0.1MF 50V
C28	S	1-161-485-00	CERAMIC 0.1MF 50V
C29	S	1-161-485-00	CERAMIC 0.1MF 50V
C30	S	1-161-485-00	CERAMIC 0.1MF 50V

Ref. No.	SP	SONY Parts No.	Description
C31	S	1-161-485-00	CERAMIC 0.1MF 50V
C32	S	1-161-485-00	CERAMIC 0.1MF 50V
C33	S	1-161-485-00	CERAMIC 0.1MF 50V
C34	S	1-161-485-00	CERAMIC 0.1MF 50V
C35	S	1-161-485-00	CERAMIC 0.1MF 50V
C36	S	1-161-485-00	CERAMIC 0.1MF 50V
C37	S	1-161-485-00	CERAMIC 0.1MF 50V
C38	S	1-161-485-00	CERAMIC 0.1MF 50V
C39	S	1-161-485-00	CERAMIC 0.1MF 50V
C40	S	1-161-485-00	CERAMIC 0.1MF 50V
C41	S	1-162-871-11	CERAMIC 47PF 5% 50V
C42	S	1-162-871-11	CERAMIC 47PF 5% 50V
C43	S	1-130-471-00	PE TEREPHTHALATE 0.001MF 5% 50V
C44	S	1-130-471-00	PE TEREPHTHALATE 0.001MF 5% 50V
C45	S	1-161-485-00	CERAMIC 0.1MF 50V
C46	S	1-161-485-00	CERAMIC 0.1MF 50V
C47	S	1-130-471-00	PE TEREPHTHALATE 0.001MF 5% 50V
C48	S	1-130-471-00	PE TEREPHTHALATE 0.001MF 5% 50V
C49	S	1-162-714-11	CERAMIC 150PF 5% 50V
C50	S	1-162-871-11	CERAMIC 47PF 5% 50V
C51	S	1-162-871-11	CERAMIC 47PF 5% 50V
C52	S	1-162-667-11	CERAMIC 10PF 5% 50V
C53	S	1-161-485-00	CERAMIC 0.1MF 50V
C54	S	1-161-485-00	CERAMIC 0.1MF 50V
CNJ420	O	1-564-699-21	CONNECTOR,RIBBON CABLE 34P
CNJ421	O	1-506-904-11	CONNECTOR,FLAT CABLE 40P
CNJ422	O	1-506-904-11	CONNECTOR,FLAT CABLE 40P
CNJ950	O	1-560-305-00	POST HEADER (IL CONNECTOR) 10P
D1	S	8-719-911-19	1SS119
D2	S	8-719-911-19	1SS119
D3	S	8-719-912-20	1SS120
D4	S	8-719-912-20	1SS120
D5	S	8-719-911-19	1SS119
D6	S	8-719-911-19	1SS119
D7	S	8-719-911-19	1SS119
IC1	S	8-759-937-43	Z8002APS
IC2	S	8-759-202-74	TC74HC04P
IC3	S	8-759-202-11	TC74HC00P
IC4	S	8-759-202-21	TC74HC32P
IC5	S	8-759-202-18	TC74HC20P

Ref. No.	SP	SONY Parts No.	Description		
IC6	S	8-759-995-14	AM9513DC		
IC7	S	8-759-995-14	AM9513DC		
IC8	S	8-759-202-15	TC74HC10P		
IC9	S	8-759-203-48	TC74HC573P		
IC10	S	8-759-203-48	TC74HC573P		
IC11	S	8-759-202-26	TC74HC138P		
IC12	S	8-759-202-32	TC74HC163P		
IC13	S	T-9413-954-2	P2.01.04.4 ODD	Programmed SET P2.01.04.4 T-9413-953-2	APR-5001 (Up to S/N 20521) APR-5002 (Up to S/N 20615)
IC14	S	T-9413-955-2	P2.01.04.4 EVEN		
IC13	S	T-9413-957-3	P4.01.01.1 ODD	Programmed SET P4.01.01.1 T-9413-956-3	APR-5001 (S/N 20522 and higher) APR-5002 (S/N 20616 and higher)
IC14	S	T-9413-958-3	P4.01.01.1 EVEN		
IC15	S	8-759-202-26	TC74HC138P		
IC16	S	8-759-300-63	HM6264LP-15		
IC17	S	8-759-300-63	HM6264LP-15		
IC18	S	8-759-202-74	TC74HC04P		
IC19	S	8-759-000-XX	MC74HC74N		
IC20	S	8-759-001-42	MC74HC174N		
IC22	S	8-759-202-86	TC74HC123P		
IC23	S	8-759-001-00	MC74HC132N		
IC24	S	8-759-937-46	Z8030APS		
IC25	S	8-759-937-44	Z8036APS		
IC26	S	8-759-900-26	SN74LS26N		
IC27	S	8-759-202-11	TC74HC00P		
IC28	S	8-759-000-XX	MC74HC74N		
IC29	S	8-759-000-XX	MC74HC74N		
IC30	S	8-759-001-42	MC74HC174N		
IC31	S	8-759-203-01	TC74HC175P		
IC32	S	8-759-202-24	TC74HC86P		
IC33	S	8-759-937-49	RC4152NB		
IC34	S	8-759-937-49	RC4152NB		
IC36	S	8-759-937-49	RC4152NB		
IC37	S	8-759-937-49	RC4152NB		
IC38	S	8-759-202-56	TC74HC245P		
IC39	S	8-759-202-56	TC74HC245P		
IC40	S	8-759-202-56	TC74HC245P		
IC41	S	8-759-202-55	TC74HC244P		
IC42	S	8-759-202-55	TC74HC244P		

Ref. No.	SP	SONY Parts No.	Description
IC43	S	8-759-202-55	TC74HC244P
IC44	S	8-759-937-40	DG212CJ
IC45	S	8-759-202-17	TC74HC14P
IC46	S	8-759-937-49	RC4152NB
IC47	S	8-759-937-49	RC4152NB
IC48	S	8-759-937-49	RC4152NB
IC50	S	8-719-901-03	PC525
JU1	S	1-560-733-00	PIN,SHORT
JU2	S	1-560-733-00	PIN,SHORT
JU3	S	1-560-733-00	PIN,SHORT
JU4	S	1-560-733-00	PIN,SHORT
JU5	S	1-560-733-00	PIN,SHORT
JU6	S	1-560-733-00	PIN,SHORT
JU7	S	1-560-733-00	PIN,SHORT
JU8	S	1-560-733-00	PIN,SHORT
JU9	S	1-560-733-00	PIN,SHORT
JU10	S	1-560-733-00	PIN,SHORT
JU11	S	1-560-733-00	PIN,SHORT
L1	S	1-421-329-00	COIL,CHOKE
Q1	S	8-729-113-08	2N3906
Q2	S	8-729-139-04	2N3904
Q3	S	8-729-139-04	2N3904
R1	S	1-249-393-11	CARBON 10 5% 1/4W
R2	S	1-249-393-11	CARBON 10 5% 1/4W
R3	S	1-249-417-11	CARBON 1K 5% 1/4W
R4	S	1-247-852-11	CARBON 7.5K 5% 1/4W
R5	S	1-247-903-00	CARBON 1M 5% 1/4W
R6	S	1-249-441-11	CARBON 100K 5% 1/4W
R7	S	1-247-849-00	CARBON 5.6K 5% 1/4W
R8	S	1-214-557-00	METAL FILM 1K 1% 1/8W
R9	S	1-214-569-00	METAL FILM 3.3K 1% 1/8W
R10	S	1-214-552-00	METAL FILM 620 1% 1/8W
R11	S	1-249-426-11	CARBON 5.6K 5% 1/4W
R12	S	1-247-854-11	CARBON 9.1K 5% 1/4W
R13	S	1-247-887-00	CARBON 220K 5% 1/4W
R14	S	1-249-417-11	CARBON 1K 5% 1/4W
R15	S	1-249-441-11	CARBON 100K 5% 1/4W
R16	S	1-249-426-11	CARBON 5.6K 5% 1/4W
R17	S	1-249-426-11	CARBON 5.6K 5% 1/4W
R18	S	1-249-426-11	CARBON 5.6K 5% 1/4W
R19	S	1-249-426-11	CARBON 5.6K 5% 1/4W
R20	S	1-249-426-11	CARBON 5.6K 5% 1/4W

Ref. No.	SP	SONY Parts No.	Description			
R21	S	1-249-426-11	CARBON	5.6K	5%	1/6W
R22	S	1-249-426-11	CARBON	5.6K	5%	1/6W
R23	S	1-249-426-11	CARBON	5.6K	5%	1/6W
R24	S	1-249-426-11	CARBON	5.6K	5%	1/6W
R25	S	1-249-437-11	CARBON	47K	5%	1/6W
R26	S	1-249-437-11	CARBON	47K	5%	1/6W
R27	S	1-249-439-11	CARBON	68K	5%	1/6W
R28	S	1-249-439-11	CARBON	68K	5%	1/6W
R29	S	1-249-437-11	CARBON	47K	5%	1/6W
R30	S	1-249-437-11	CARBON	47K	5%	1/6W
R31	S	1-247-903-00	CARBON	1M	5%	1/6W
R32	S	1-247-903-00	CARBON	1M	5%	1/6W
R33	S	1-247-883-00	CARBON	150K	5%	1/6W
R34	S	1-247-883-00	CARBON	150K	5%	1/6W
R35	S	1-249-426-11	CARBON	5.6K	5%	1/6W
R36	S	1-249-426-11	CARBON	5.6K	5%	1/6W
R37	S	1-214-565-00	METAL FILM	2.2K	1%	1/8W
R38	S	1-214-563-00	METAL FILM	1.8K	1%	1/8W
R39	S	1-249-426-11	CARBON	5.6K	5%	1/6W
R40	S	1-249-426-11	CARBON	5.6K	5%	1/6W
R41	S	1-249-426-11	CARBON	5.6K	5%	1/6W
R42	S	1-249-426-11	CARBON	5.6K	5%	1/6W
R43	S	1-249-426-11	CARBON	5.6K	5%	1/6W
R44	S	1-247-878-00	CARBON	91K	5%	1/6W
R45	S	1-247-878-00	CARBON	91K	5%	1/6W
R46	S	1-247-883-00	CARBON	150K	5%	1/6W
R47	S	1-247-883-00	CARBON	150K	5%	1/6W
R48	S	1-247-903-00	CARBON	1M	5%	1/6W
R49	S	1-247-903-00	CARBON	1M	5%	1/6W
R50	S	1-249-437-11	CARBON	47K	5%	1/6W
R51	S	1-249-437-11	CARBON	47K	5%	1/6W
R52	S	1-249-426-11	CARBON	5.6K	5%	1/6W
R53	S	1-249-426-11	CARBON	5.6K	5%	1/6W
R54	S	1-249-413-11	CARBON	470	5%	1/6W
R55	S	1-249-441-11	CARBON	100K	5%	1/6W
R57	S	1-247-804-11	CARBON	75		1/6W
R58	S	1-249-437-11	CARBON	47K	5%	1/6W
R59	S	1-249-437-11	CARBON	47K	5%	1/6W
R60	S	1-249-426-11	CARBON	5.6K	5%	1/6W
R61	S	1-249-426-11	CARBON	5.6K	5%	1/6W
R62	S	1-249-426-11	CARBON	5.6K	5%	1/6W
R63	S	1-249-426-11	CARBON	5.6K	5%	1/6W
R64	S	1-249-426-11	CARBON	5.6K	5%	1/6W
R65	S	1-249-426-11	CARBON	5.6K	5%	1/6W
R66	S	1-249-426-11	CARBON	5.6K	5%	1/6W

Ref. No.	SP	SONY Parts No.	Description
R67	S	1-214-567-00	METAL FILM 2.7K 1% 1/8W
R68	S	1-214-567-00	METAL FILM 2.7K 1% 1/8W
RN1	S	1-231-409-00	RESISTOR BLOCK 5.6K
RN2	S	1-231-409-00	RESISTOR BLOCK 5.6K
RN3	S	1-231-409-00	RESISTOR BLOCK 5.6K
RN4	S	1-231-409-00	RESISTOR BLOCK 5.6K
RN5	S	1-231-409-00	RESISTOR BLOCK 5.6K
RN6	S	1-231-409-00	RESISTOR BLOCK 5.6K
RV1	S	1-228-462-00	ADJ,CERMET 100K
RV2	S	1-228-462-00	ADJ,CERMET 100K
RV3	S	1-228-461-00	ADJ,CERMET 50K
RV4	S	1-228-461-00	ADJ,CERMET 50K
S1	S	1-554-750-11	SWITCH,KEY BOARD (WITH LED)
Y1	S	1-567-691-12	OSC 7.872MHz

Ref. No.	SP	SONY Parts No.	Description
CPU BOARD		(1-619-161-12)	
	O	A-7850-358-A	COMPLETE PCB,CPU (For APR-5002A)
	O	A-7850-736-A	COMPLETE PCB,CPU (For APR-5003V)
		(These assemblies include the following parts.)	
	S	1-561-832-00	SOCKET,SHORT
B1	O	T-9413-327-1	LITHIUM BATTERY
C1	S	1-124-584-00	ELECT 100MF 20% 10V
C2	S	1-123-357-00	ELECT 22MF 20% 35V
C3	S	1-123-357-00	ELECT 22MF 20% 35V
C4	S	1-124-902-00	ELECT 0.47MF 20% 50V
C5	S	1-130-471-00	PE TEREPHTHALATE 0.001MF 5% 50V
C6	S	1-162-667-11	CERAMIC 10PF 5% 50V
C7	S	1-162-667-11	CERAMIC 10PF 5% 50V
C8	S	1-130-471-00	PE TEREPHTHALATE 0.001MF 5% 50V
C9	S	1-161-896-11	CERAMIC 0.22MF 50V
C10	S	1-130-471-00	PE TEREPHTHALATE 0.001MF 5% 50V
C11	S	1-130-471-00	PE TEREPHTHALATE 0.001MF 5% 50V
C12	S	1-161-485-00	CERAMIC 0.1MF 50V
C13	S	1-161-485-00	CERAMIC 0.1MF 50V
C14	S	1-130-471-00	PE TEREPHTHALATE 0.001MF 5% 50V
C15	S	1-130-471-00	PE TEREPHTHALATE 0.001MF 5% 50V
C16	S	1-161-485-00	CERAMIC 0.1MF 50V
C17	S	1-161-485-00	CERAMIC 0.1MF 50V
C18	S	1-161-485-00	CERAMIC 0.1MF 50V
C19	S	1-161-485-00	CERAMIC 0.1MF 50V
C20	S	1-161-485-00	CERAMIC 0.1MF 50V
C21	S	1-161-485-00	CERAMIC 0.1MF 50V
C22	S	1-161-485-00	CERAMIC 0.1MF 50V
C23	S	1-161-485-00	CERAMIC 0.1MF 50V
C24	S	1-161-485-00	CERAMIC 0.1MF 50V
C25	S	1-161-485-00	CERAMIC 0.1MF 50V
C26	S	1-161-485-00	CERAMIC 0.1MF 50V
C27	S	1-161-485-00	CERAMIC 0.1MF 50V
C28	S	1-161-485-00	CERAMIC 0.1MF 50V
C29	S	1-161-485-00	CERAMIC 0.1MF 50V
C30	S	1-161-485-00	CERAMIC 0.1MF 50V

Ref. No.	SP	SONY Parts No.	Description
C31	S	1-161-485-00	CERAMIC 0.1MF 50V
C32	S	1-161-485-00	CERAMIC 0.1MF 50V
C33	S	1-161-485-00	CERAMIC 0.1MF 50V
C34	S	1-161-485-00	CERAMIC 0.1MF 50V
C35	S	1-161-485-00	CERAMIC 0.1MF 50V
C36	S	1-161-485-00	CERAMIC 0.1MF 50V
C37	S	1-161-485-00	CERAMIC 0.1MF 50V
C38	S	1-161-485-00	CERAMIC 0.1MF 50V
C39	S	1-161-485-00	CERAMIC 0.1MF 50V
C40	S	1-161-485-00	CERAMIC 0.1MF 50V
C41	S	1-162-871-11	CERAMIC 47PF 5% 50V
C42	S	1-162-871-11	CERAMIC 47PF 5% 50V
C43	S	1-130-471-00	PE TEREPHTHALATE 0.001MF 5% 50V
C44	S	1-130-471-00	PE TEREPHTHALATE 0.001MF 5% 50V
C45	S	1-161-485-00	CERAMIC 0.1MF 50V
C46	S	1-161-485-00	CERAMIC 0.1MF 50V
C47	S	1-130-471-00	PE TEREPHTHALATE 0.001MF 5% 50V
C48	S	1-130-471-00	PE TEREPHTHALATE 0.001MF 5% 50V
C49	S	1-162-714-11	CERAMIC 150PF 5% 50V
C50	S	1-162-871-11	CERAMIC 47PF 5% 50V
C51	S	1-162-871-11	CERAMIC 47PF 5% 50V
C52	S	1-162-667-11	CERAMIC 10PF 5% 50V
C53	S	1-161-485-00	CERAMIC 0.1MF 50V
C54	S	1-161-485-00	CERAMIC 0.1MF 50V
CNJ420	O	1-564-699-21	CONNECTOR,RIBBON CABLE 34P
CNJ421	O	1-506-904-11	CONNECTOR,FLAT CABLE 40P
CNJ422	O	1-506-904-11	CONNECTOR,FLAT CABLE 40P
CNJ950	O	1-560-305-00	POST HEADER (IL CONNECTOR) 10P
D1	S	8-719-911-19	1SS119
D2	S	8-719-911-19	1SS119
D3	S	8-719-912-20	1SS120
D4	S	8-719-912-20	1SS120
D5	S	8-719-911-19	1SS119
D6	S	8-719-911-19	1SS119
D7	S	8-719-911-19	1SS119
IC1	S	8-759-937-43	Z8002APS
IC2	S	8-759-202-74	TC74HC04P
IC3	S	8-759-202-11	TC74HC00P
IC4	S	8-759-202-21	TC74HC32P
IC5	S	8-759-202-18	TC74HC20P

Ref. No.	SP	SONY Parts No.	Description
IC6	S	8-759-995-14	AM9513DC
IC7	S	8-759-995-14	AM9513DC
IC8	S	8-759-202-15	TC74HC10P
IC9	S	8-759-203-48	TC74HC573P
IC10	S	8-759-203-48	TC74HC573P
IC11	S	T-9414-200-1	IC PROM STATUS DEC
IC12	S	8-759-202-32	TC74HC163P
IC13	S	T-9413-957-3	P4.01.01.1 ODD
IC14	S	T-9413-958-3	P4.01.01.1 EVEN
IC15	S	8-759-202-26	TC74HC138P
IC16	S	8-759-301-62	HM6264P-12
IC17	S	8-759-301-62	HM6264P-12
IC18	S	8-759-202-74	TC74HC04P
IC19	S	8-759-000-XX	MC74HC74N
IC20	S	8-759-001-42	MC74HC174N
IC22	S	8-759-202-86	TC74HC123P
IC23	S	8-759-001-00	MC74HC132N
IC24	S	8-759-937-46	Z8030APS
IC25	S	8-759-937-44	Z8036APS
IC26	S	8-759-900-26	SN74LS26N
IC27	S	8-759-202-11	TC74HC00P
IC28	S	8-759-000-XX	MC74HC74N
IC29	S	8-759-000-XX	MC74HC74N
IC30	S	8-759-001-42	MC74HC174N
IC31	S	8-759-203-01	TC74HC175P
IC32	S	8-759-202-24	TC74HC86P
IC33	S	8-759-937-49	RC4152NB
IC34	S	8-759-937-49	RC4152NB
IC35	S	8-759-990-04	TL074CN (For APR-5003V)
IC36	S	8-759-937-49	RC4152NB
IC37	S	8-759-937-49	RC4152NB
IC38	S	8-759-202-56	TC74HC245P
IC39	S	8-759-202-56	TC74HC245P
IC40	S	8-759-202-56	TC74HC245P
IC41	S	8-759-202-55	TC74HC244P
IC42	S	8-759-202-55	TC74HC244P
IC43	S	8-759-202-55	TC74HC244P
IC44	S	8-759-937-40	DG212CJ
IC45	S	8-759-202-17	TC74HC14P
IC46	S	8-759-937-49	RC4152NB

Ref. No.	SP	SONY Parts No.	Description
IC47	S	8-759-937-49	RC4152NB
IC48	S	8-759-937-49	RC4152NB
IC49	S	8-759-937-49	RC4152NB (For APR-5003V)
IC50	S	8-719-901-03	PC525
JU1	S	1-560-733-00	PIN,SHORT
JU2	S	1-560-733-00	PIN,SHORT
JU3	S	1-560-733-00	PIN,SHORT
JU4	S	1-560-733-00	PIN,SHORT
JU5	S	1-560-733-00	PIN,SHORT
JU6	S	1-560-733-00	PIN,SHORT
JU7	S	1-560-733-00	PIN,SHORT
JU8	S	1-560-733-00	PIN,SHORT
JU9	S	1-560-733-00	PIN,SHORT
JU10	S	1-560-733-00	PIN,SHORT
JU11	S	1-560-733-00	PIN,SHORT
L1	S	1-421-329-00	COIL,CHOKE
Q1	S	8-729-113-08	2N3906
Q2	S	8-729-139-04	2N3904
Q3	S	8-729-139-04	2N3904
R1	S	1-249-393-11	CARBON 10 5% 1/4W
R2	S	1-249-393-11	CARBON 10 5% 1/4W
R3	S	1-249-417-11	CARBON 1K 5% 1/4W
R4	S	1-247-852-11	CARBON 7.5K 5% 1/4W
R5	S	1-247-903-00	CARBON 1M 5% 1/4W
R6	S	1-249-441-11	CARBON 100K 5% 1/4W
R8	S	1-214-557-00	METAL FILM 1K 1% 1/8W
R9	S	1-214-569-00	METAL FILM 3.3K 1% 1/8W
R10	S	1-214-552-00	METAL FILM 620 1% 1/8W
R11	S	1-249-426-11	CARBON 5.6K 5% 1/4W
R12	S	1-247-854-11	CARBON 9.1K 5% 1/4W
R13	S	1-247-887-00	CARBON 220K 5% 1/4W
R14	S	1-249-417-11	CARBON 1K 5% 1/4W
R15	S	1-249-441-11	CARBON 100K 5% 1/4W
R16	S	1-249-426-11	CARBON 5.6K 5% 1/4W
R17	S	1-249-426-11	CARBON 5.6K 5% 1/4W
R18	S	1-249-426-11	CARBON 5.6K 5% 1/4W
R19	S	1-249-426-11	CARBON 5.6K 5% 1/4W
R20	S	1-249-426-11	CARBON 5.6K 5% 1/4W
R21	S	1-249-426-11	CARBON 5.6K 5% 1/6W

Ref. No.	SP	SONY Parts No.	Description			
R22	S	1-249-426-11	CARBON	5.6K	5%	1/6W
R23	S	1-249-426-11	CARBON	5.6K	5%	1/6W
R24	S	1-249-426-11	CARBON	5.6K	5%	1/6W
R25	S	1-249-437-11	CARBON	47K	5%	1/6W
R26	S	1-249-437-11	CARBON	47K	5%	1/6W
R27	S	1-249-439-11	CARBON	68K	5%	1/6W
R28	S	1-249-439-11	CARBON	68K	5%	1/6W
R29	S	1-249-437-11	CARBON	47K	5%	1/6W
R30	S	1-249-437-11	CARBON	47K	5%	1/6W
R31	S	1-247-903-00	CARBON	1M	5%	1/6W
R32	S	1-247-903-00	CARBON	1M	5%	1/6W
R33	S	1-247-883-00	CARBON	150K	5%	1/6W
R34	S	1-247-883-00	CARBON	150K	5%	1/6W
R35	S	1-249-426-11	CARBON	5.6K	5%	1/6W
R36	S	1-249-426-11	CARBON	5.6K	5%	1/6W
R37	S	1-214-565-00	METAL FILM	2.2K	1%	1/8W
R38	S	1-214-563-00	METAL FILM	1.8K	1%	1/8W
R39	S	1-249-426-11	CARBON	5.6K	5%	1/6W
R40	S	1-249-426-11	CARBON	5.6K	5%	1/6W
R41	S	1-249-426-11	CARBON	5.6K	5%	1/6W
R42	S	1-249-426-11	CARBON	5.6K	5%	1/6W
R43	S	1-249-426-11	CARBON	5.6K	5%	1/6W
R44	S	1-247-878-00	CARBON	91K	5%	1/6W
R45	S	1-247-878-00	CARBON	91K	5%	1/6W
R46	S	1-247-883-00	CARBON	150K	5%	1/6W
R47	S	1-247-883-00	CARBON	150K	5%	1/6W
R48	S	1-247-903-00	CARBON	1M	5%	1/6W
R49	S	1-247-903-00	CARBON	1M	5%	1/6W
R50	S	1-249-437-11	CARBON	47K	5%	1/6W
R51	S	1-249-437-11	CARBON	47K	5%	1/6W
R52	S	1-249-426-11	CARBON	5.6K	5%	1/6W
R53	S	1-249-426-11	CARBON	5.6K	5%	1/6W
R54	S	1-249-413-11	CARBON	470	5%	1/6W
R55	S	1-249-441-11	CARBON	100K	5%	1/6W
R57	S	1-247-804-11	CARBON	75		1/6W
R58	S	1-249-437-11	CARBON	47K	5%	1/6W
R59	S	1-249-437-11	CARBON	47K	5%	1/6W
R60	S	1-249-426-11	CARBON	5.6K	5%	1/6W
R61	S	1-249-426-11	CARBON	5.6K	5%	1/6W
R62	S	1-249-426-11	CARBON	5.6K	5%	1/6W
R63	S	1-249-426-11	CARBON	5.6K	5%	1/6W
R64	S	1-249-426-11	CARBON	5.6K	5%	1/6W
R65	S	1-249-426-11	CARBON	5.6K	5%	1/6W
R66	S	1-249-426-11	CARBON	5.6K	5%	1/6W
R67	S	1-214-567-00	METAL FILM	2.7K	1%	1/8W
R68	S	1-214-567-00	METAL FILM	2.7K	1%	1/8W

Ref. No.	SP	SONY Parts No.	Description
RN1	S	1-231-409-00	RESISTOR BLOCK 5.6K
RN2	S	1-231-409-00	RESISTOR BLOCK 5.6K
RN3	S	1-231-409-00	RESISTOR BLOCK 5.6K
RN4	S	1-231-409-00	RESISTOR BLOCK 5.6K
RN5	S	1-231-409-00	RESISTOR BLOCK 5.6K
RN6	S	1-231-409-00	RESISTOR BLOCK 5.6K
RV1	S	1-228-462-00	ADJ,CERMET 100K
RV2	S	1-228-462-00	ADJ,CERMET 100K
RV3	S	1-228-461-00	ADJ,CERMET 50K
RV4	S	1-228-461-00	ADJ,CERMET 50K
S1	S	1-554-750-11	SWITCH,KEY BOARD (WITH LED)
Y1	S	1-567-691-12	OSC 7.872MHz

CSL BOARD

	O	A-7850-346-A	COMPLETE PCB, CSL
		(This assemby includes the following parts.)	
	S	2-832-007-00	BUSHING(K), INSULATING
	S	3-566-928-00	SHEET, INSULATING
	S	3-703-207-11	INSULATOR, TO-220
	S	7-628-254-10	SCREW, PSW 2.6x6
	S	7-628-254-20	SCREW, PSW 2.6x8
	S	7-682-648-09	SCREW, PSW 3x8
	S	7-684-023-04	N3, TYPE 2
	S	7-688-003-11	W3, MIDDLE
C1	S	1-161-485-00	CERAMIC 0.1MF 50V
C2	S	1-162-710-11	CERAMIC 100PF 5% 50V
C3	S	1-161-485-00	CERAMIC 0.1MF 50V
C4	S	1-161-485-00	CERAMIC 0.1MF 50V
C5	S	1-161-485-00	CERAMIC 0.1MF 50V
C6	S	1-161-485-00	CERAMIC 0.1MF 50v
C7	S	1-162-710-11	CERAMIC 100PF 5% 50V
C8	S	1-161-485-00	CERAMIC 0.1MF 50V
C9	S	1-161-485-00	CERAMIC 0.1MF 50V
C10	S	1-161-485-00	CERAMIC 0.1MF 50V
C11	S	1-161-485-00	CERAMIC 0.1MF 50V
C12	S	1-161-485-00	CERAMIC 0.1MF 50V
C13	S	1-161-485-00	CERAMIC 0.1MF 50V
C14	S	1-162-734-11	CERAMIC 0.001MF 10% 50V
C15	S	1-162-734-11	CERAMIC 0.001MF 10% 50V

Ref. No.	SP	SONY Parts No.	Description
C16	S	1-130-777-00	POLYESTER FILM 0.1MF 5% 100V
C17	S	1-161-473-00	CERAMIC 0.01MF 10% 50V
C18	S	1-162-790-11	CERAMIC 0.0047MF 10% 50V
C19	S	1-130-777-00	POLYESTER FILM 0.1MF 5% 100V
C20	S	1-130-777-00	POLYESTER FILM 0.1MF 5% 100V
C21	S	1-162-734-11	CERAMIC 0.001MF 10% 50V
C22	S	1-161-485-00	CERAMIC 0.1MF 50V
C23	S	1-161-485-00	CERAMIC 0.1MF 50V
C24	S	1-161-485-00	CERAMIC 0.1MF 50V
C25	S	1-124-584-00	ELECT 100MF 20% 10V
C26	S	1-123-357-00	ELECT 22MF 20% 35V
C27	S	1-123-357-00	ELECT 22MF 20% 35V
C28	S	1-123-357-00	ELECT 22MF 20% 35V
C29	S	1-123-357-00	ELECT 22MF 20% 35V
C30	S	1-161-485-00	CERAMIC 0.1MF 50V
C31	S	1-161-485-00	CERAMIC 0.1MF 50V
C32	S	1-161-485-00	CERAMIC 0.1MF 50V
C33	S	1-161-485-00	CERAMIC 0.1MF 50V
C34	S	1-161-485-00	CERAMIC 0.1MF 50V
C35	S	1-161-485-00	CERAMIC 0.1MF 50V
C36	S	1-161-485-00	CERAMIC 0.1MF 50V
C37	S	1-161-485-00	CERAMIC 0.1MF 50V
C38	S	1-161-485-00	CERAMIC 0.1MF 50V
C39	S	1-161-485-00	CERAMIC 0.1MF 50V
C40	S	1-161-485-00	CERAMIC 0.1MF 50V
CNJ460	O	1-566-416-11	PIN, CONNECTOR (PC BOARD) 3P
CNJ461	O	1-560-301-00	POST HEADER (IL CONNECTOR) 4P
CNJ463	O	1-560-301-00	POST HEADER (IL CONNECTOR) 4P
CNJ464	O	1-560-300-00	POST HEADER (IL CONNECTOR) 3P
CNJ951	O	1-560-302-00	POST HEADER (IL CONNECTOR) 5P
D1	S	8-719-911-19	1SS119
D2	S	8-719-911-19	1SS119
D3	S	8-719-911-19	1SS119
D4	S	8-719-911-19	1SS119
D5	S	8-719-911-19	1SS119
D6	S	8-719-911-19	1SS119
D7	S	8-719-911-19	1SS119
D8	S	8-719-110-72	RD30ES-B2
D9	S	8-719-109-85	RD5.1ES-B2
D10	S	8-719-911-19	1SS119
DS1	S	8-719-404-06	LN28RP
F1	S	1-532-782-11	FUSE, MICRO 4A (SECONDARY)

Ref. No.	SP	SONY Parts No.	Description			
IC1	S	8-759-990-04	TL074CN			
IC2	S	8-759-907-01	TL071CP			
IC3	S	8-759-909-33	LM311P			
IC4	S	8-759-001-00	MC74HC132N			
IC5	S	8-719-939-12	HCPL-2531			
IC6	S	8-759-937-30	MM74C932N			
IC7	S	8-759-990-04	TL074CN			
IC8	S	8-759-907-01	TL071CP			
IC9	S	8-759-910-83	TL072ACP			
IC10	S	8-759-001-00	MC74HC132N			
IC11	S	8-759-937-40	DG212CJ			
IC12	S	8-759-604-34	M5F7815			
IC13	S	8-759-604-52	M5F7915			
IC14	S	8-759-982-44	RC79LO5A			
L1	S	1-421-329-00	COIL,CHOKE			
Q1	S	8-729-139-04	2N3904			
Q2	S	8-729-139-04	2N3904			
Q3	S	8-729-306-92	2SD669A			
Q4	S	8-729-383-73	2SC2837			
Q5	S	8-729-304-92	2SB649A			
Q6	S	8-729-383-73	2SC2837			
R1	S	1-249-417-11	CARBON	1K	5%	1/4W
R2	S	1-249-429-11	CARBON	10K	5%	1/4W
R3	S	1-249-441-11	CARBON	100K	5%	1/4W
R4	S	1-249-417-11	CARBON	1K	5%	1/4W
R5	S	1-249-438-11	CARBON	56K	5%	1/4W
R6	S	1-247-903-00	CARBON	1M	5%	1/4W
R7	S	1-249-429-11	CARBON	10K	5%	1/4W
R8	S	1-247-700-11	CARBON	100	5%	1/4W
R9	S	1-249-417-11	CARBON	1K	5%	1/4W
R10	S	1-249-429-11	CARBON	10K	5%	1/4W
R11	S	1-249-441-11	CARBON	100K	5%	1/4W
R12	S	1-249-417-11	CARBON	1K	5%	1/4W
R13	S	1-249-438-11	CARBON	56K	5%	1/4W
R14	S	1-247-903-00	CARBON	1M	5%	1/4W
R15	S	1-249-429-11	CARBON	10K	5%	1/4W
R16	S	1-247-700-11	CARBON	100	5%	1/4W
R17	S	1-249-429-11	CARBON	10K	5%	1/4W
R18	S	1-247-838-00	CARBON	2K	5%	1/4W
R19	S	1-247-838-00	CARBON	2K	5%	1/4W
R20	S	1-249-425-11	CARBON	4.7K	5%	1/4W
R21	S	1-214-581-00	METAL FILM	10K	1%	1/8W
R22	S	1-214-581-00	METAL FILM	10K	1%	1/8W
R23	S	1-214-581-00	METAL FILM	10K	1%	1/8W
R24	S	1-247-903-00	CARBON	1M	5%	1/4W
R25	S	1-249-417-11	CARBON	1K	5%	1/4W

Ref. No.	SP	SONY Parts No.	Description			
R26	S	1-249-441-11	CARBON	100K	5%	1/4W
R27	S	1-249-417-11	CARBON	1K	5%	1/4W
R28	S	1-249-431-11	CARBON	15K	5%	1/4W
R29	S	1-249-431-11	CARBON	15K	5%	1/4W
R32	S	1-249-408-11	CARBON	180	5%	1/4W
R33	S	1-249-425-11	CARBON	4.7K	5%	1/4W
R34	S	1-249-441-11	CARBON	100K	5%	1/4W
R35	S	1-215-822-11	METAL FILM	47K	1%	1/8W
R36	S	1-214-591-00	METAL FILM	27K	1%	1/8W
R37	S	1-214-587-00	METAL FILM	18K	1%	1/8W
R38	S	1-215-822-11	METAL FILM	47K	1%	1/8W
R39	S	1-214-578-00	METAL FILM	7.5K	1%	1/8W
R40	S	1-214-579-00	METAL FILM	8.2K	1%	1/8W
R41	S	1-214-581-00	METAL FILM	10K	1%	1/8W
R42	S	1-214-581-00	METAL FILM	10K	1%	1/8W
R43	S	1-214-581-00	METAL FILM	10K	1%	1/8W
R44	S	1-214-581-00	METAL FILM	10K	1%	1/8W
R45	S	1-214-588-00	METAL FILM	20K	1%	1/8W
R46	S	1-214-588-00	METAL FILM	20K	1%	1/8W
R47	S	1-214-581-00	METAL FILM	10K	1%	1/8W
R49	S	1-249-417-11	CARBON	1K	5%	1/4W
R50	S	1-247-713-11	CARBON	1K	5%	1/4W
R51	S	1-247-713-11	CARBON	1K	5%	1/4W
R52	S	1-247-713-11	CARBON	1K	5%	1/4W
R53	S	1-247-713-11	CARBON	1K	5%	1/4W
R54	S	1-207-612-00	RES,WIRE	0.1	10%	3W
R55	S	1-249-429-11	CARBON	10K	5%	1/4W
R56	S	1-249-417-11	CARBON	1K	5%	1/4W
R57	S	1-247-889-00	CARBON	270K	5%	1/4W
R58	S	1-214-557-00	METAL FILM	1K	1%	1/8W
R59	S	1-214-581-00	METAL FILM	10K	1%	1/8W
R60	S	1-214-557-00	METAL FILM	1K	1%	1/8W
R61	S	1-214-581-00	METAL FILM	10K	1%	1/8W
R63	S	1-214-581-00	METAL FILM	10K	1%	1/8W
R65	S	1-214-581-00	METAL FILM	10K	1%	1/8W
R66	S	1-249-434-11	CARBON	27K	5%	1/4W
R67	S	1-249-441-11	CARBON	100K	5%	1/4W
R68	S	1-249-417-11	CARBON	1K	5%	1/4W
RV1	S	1-237-520-21	ADJ,METAL FILM	50K		
RV2	S	1-237-520-21	ADJ,METAL FILM	50K		

Ref. No.	SP	SONY Parts No.	Description
CTM BOARD			
	O	A-7850-368-A	MOUNTED PCB,CTM
		(This assembly includes the following parts.)	
	O	1-937-553-11	HARNESS (METER CONTROL)
	O	1-937-554-12	HARNESS (METER INPUT)
	S	4-903-740-01	FRAME, FITTING (SQUARE 10)
	S	4-903-741-01	KEY TOP (SQUARE 10) (WINDOW)
	O	T-9412-217-1	SOCKET,LAMP 25-212
C1	S	1-161-473-00	CERAMIC 0.01MF 10% 50V
C2	S	1-161-473-00	CERAMIC 0.01MF 10% 50V
C3	S	1-161-473-00	CERAMIC 0.01MF 10% 50V
C4	S	1-161-473-00	CERAMIC 0.01MF 10% 50V
C5	S	1-161-473-00	CERAMIC 0.01MF 10% 50V
C6	S	1-161-473-00	CERAMIC 0.01MF 10% 50V
C7	S	1-161-473-00	CERAMIC 0.01MF 10% 50V
D1	S	8-719-911-19	1SS119
D2	S	8-719-911-19	1SS119
D3	S	8-719-911-19	1SS119
D4	S	8-719-911-19	1SS119
D5	S	8-719-911-19	1SS119
D6	S	8-719-911-19	1SS119
D7	S	8-719-911-19	1SS119
D8	S	8-719-911-19	1SS119
D9	S	8-719-911-19	1SS119
D10	S	8-719-911-19	1SS119
D11	S	8-719-911-19	1SS119
D12	S	8-719-911-19	1SS119
D13	S	8-719-911-19	1SS119
D14	S	8-719-404-08	LN48YP
D15	S	8-719-404-06	LN28RP
D16	S	8-719-404-06	LN28RP
IC1	S	8-759-202-14	TC74HC08P
IC2	S	8-759-202-14	TC74HC08P
Q1	S	8-729-113-08	2N3906
Q2	S	8-729-113-08	2N3906
Q3	S	8-729-904-15	VN10KM
Q4	S	8-729-904-15	VN10KM
Q5	S	8-729-904-15	VN10KM
Q6	S	8-729-904-15	VN10KM
Q7	S	8-729-904-15	VN10KM
Q8	S	8-729-904-15	VN10KM
Q9	S	8-729-904-15	VN10KM

Ref. No.	SP	SONY Parts No.	Description
R1	S	1-214-575-00	METAL FILM 5.6K 1% 1/8W
R2	S	1-214-575-00	METAL FILM 5.6K 1% 1/8W
R3	S	1-214-539-00	METAL FILM 180 1% 1/8W
R4	S	1-214-539-00	METAL FILM 180 1% 1/8W
R5	S	1-247-886-11	CARBON 200K 5% 1/4W
R6	S	1-247-886-11	CARBON 200K 5% 1/4W
R7	S	1-247-886-11	CARBON 200K 5% 1/4W
R8	S	1-247-886-11	CARBON 200K 5% 1/4W
R9	S	1-247-886-11	CARBON 200K 5% 1/4W
R10	S	1-247-886-11	CARBON 200K 5% 1/4W
R11	S	1-247-886-11	CARBON 200K 5% 1/4W
R12	S	1-214-531-00	METAL FILM 82 1% 1/8W
R13	S	1-214-531-00	METAL FILM 82 1% 1/8W
R14	S	1-214-531-00	METAL FILM 82 1% 1/8W
R15	S	1-214-531-00	METAL FILM 82 1% 1/8W
R16	S	1-214-531-00	METAL FILM 82 1% 1/8W
R17	S	1-214-531-00	METAL FILM 82 1% 1/8W
R18	S	1-214-531-00	METAL FILM 82 1% 1/8W
S1	S	1-554-750-31	SWITCH,KEY BOARD (WITH LED)
S2	S	1-554-750-31	SWITCH,KEY BOARD (WITH LED)
S3	S	1-554-750-31	SWITCH,KEY BOARD (WITH LED)
S4	S	1-554-750-21	SWITCH,KEY BOARD (WITH LED)
S5	S	1-554-750-21	SWITCH,KEY BOARD (WITH LED)
S6	S	1-554-750-21	SWITCH,KEY BOARD (WITH LED)

DSP BOARD

	O	A-7850-352-A	COMPLETE PCB,DSP (For APR-5002A)
	O	A-7850-353-A	COMPLETE PCB,DSP (For APR-5003V)
		(These assemblies include the following parts.)	
C1	S	1-161-485-00	CERAMIC 0.1MF 50V
CNP1	O	T-9411-053-1	POST HEADER
CNP2	O	T-9411-053-1	POST HEADER
D4	S	8-719-911-19	1SS119
D5	S	8-719-911-19	1SS119
D6	S	8-719-911-19	1SS119
D7	S	8-719-911-19	1SS119
D12	S	8-719-911-19	1SS119

Ref. No.	SP	SONY Parts No.	Description
D13	S	8-719-911-19	1SS119
D14	S	8-719-911-19	1SS119
D16	S	8-719-911-19	1SS119
D17	S	8-719-911-19	1SS119
D18	S	8-719-911-19	1SS119
D20	S	8-719-911-19	1SS119
D21	S	8-719-911-19	1SS119
D22	S	8-719-911-19	1SS119
D24	S	8-719-911-19	1SS119
D25	S	8-719-911-19	1SS119
D26	S	8-719-911-19	1SS119
D27	S	8-719-911-19	1SS119
D28	S	8-719-911-19	1SS119
D29	S	8-719-911-19	1SS119
D30	S	8-719-911-19	1SS119
D32	S	8-719-911-19	1SS119
D33	S	8-719-911-19	1SS119
D34	S	8-719-911-19	1SS119
D35	S	8-719-911-19	1SS119
D36	S	8-719-911-19	1SS119
D37	S	8-719-911-19	1SS119
D38	S	8-719-911-19	1SS119
D39	S	8-719-911-19	1SS119
D40	S	8-719-911-19	1SS119
DS1	S	T-9411-139-1	FIP DISPLAY
DS2	S	T-9411-139-1	FIP DISPLAY
IC1	S	8-759-207-75	TD62781AP
IC2	S	8-759-207-75	TD62781AP
IC3	S	8-759-207-75	TD62781AP
IC4	S	8-759-207-75	TD62781AP
S4	S	1-554-761-12	SWITCH,KEY BOARD (WITH LED)
S5	S	1-554-761-12	SWITCH,KEY BOARD (WITH LED)
S6	S	1-554-761-12	SWITCH,KEY BOARD (WITH LED)
S7	S	1-554-761-12	SWITCH,KEY BOARD (WITH LED)
S12	S	1-554-761-12	SWITCH,KEY BOARD (WITH LED)
S13	S	1-554-761-12	SWITCH,KEY BOARD (WITH LED)
S14	S	1-554-761-12	SWITCH,KEY BOARD (WITH LED)
S16	S	1-554-750-11	SWITCH,KEY BOARD (WITH LED)
S17	S	1-554-750-11	SWITCH,KEY BOARD (WITH LED)
S18	S	1-554-750-11	SWITCH,KEY BOARD (WITH LED)
S20	S	1-554-761-12	SWITCH,KEY BOARD (WITH LED)
S21	S	1-554-761-12	SWITCH,KEY BOARD (WITH LED)
S22	S	1-554-761-12	SWITCH,KEY BOARD (WITH LED)
S24	S	1-554-750-11	SWITCH,KEY BOARD (WITH LED)
S25	S	1-554-750-11	SWITCH,KEY BOARD (WITH LED)

Ref. No.	SP	SONY Parts No.	Description
S26	S	1-554-750-11	SWITCH,KEY BOARD (WITH LED) (For APR-5003V)
S27	S	1-554-750-11	SWITCH,KEY BOARD (WITH LED) (For APR-5003V)
S28	S	1-554-761-12	SWITCH,KEY BOARD (WITH LED)
S29	S	1-554-761-12	SWITCH,KEY BOARD (WITH LED)
S30	S	1-554-761-12	SWITCH,KEY BOARD (WITH LED)
S32	S	1-554-750-11	SWITCH,KEY BOARD (WITH LED)
S33	S	1-554-750-11	SWITCH,KEY BOARD (WITH LED)
S34	S	1-554-750-11	SWITCH,KEY BOARD (WITH LED)
S35	S	1-554-750-11	SWITCH,KEY BOARD (WITH LED)
S36	S	1-554-761-12	SWITCH,KEY BOARD (WITH LED)
S37	S	1-554-761-12	SWITCH,KEY BOARD (WITH LED)
S38	S	1-554-761-12	SWITCH,KEY BOARD (WITH LED)
S39	S	1-554-761-12	SWITCH,KEY BOARD (WITH LED)
S40	S	1-554-750-11	SWITCH,KEY BOARD (WITH LED)

FEX BOARD

	O	A-7850-364-A	COMPLETE PCB,FEX (This assembly includes the following parts.)
C1	S	1-109-561-00	MICA 0.001MF 1% 100V
C2	S	1-109-633-00	DIP-MICA 470PF 1% 500V
C3	S	1-109-687-00	DIP-MICA 390PF 1% 500V
C4	S	1-162-664-11	CERAMIC 1800PF 10% 50V
C5	S	1-109-561-00	MICA 0.001MF 1% 100V
C6	S	1-109-633-00	DIP-MICA 470PF 1% 500V
C7	S	1-109-687-00	DIP-MICA 390PF 1% 500V
C8	S	1-162-664-11	CERAMIC 1800PF 10% 50V
C9	S	1-109-561-00	MICA 0.001MF 1% 100V
C10	S	1-109-633-00	DIP-MICA 470PF 1% 500V
C11	S	1-109-687-00	DIP-MICA 390PF 1% 500V
C12	S	1-162-664-11	CERAMIC 1800PF 10% 50V
C13	S	1-124-006-11	ELECT 10MF 20% 25V
C14	S	1-124-006-11	ELECT 10MF 20% 25V
C15	S	1-124-006-11	ELECT 10MF 20% 25V
CNJ204	O	1-560-303-00	POST HEADER (IL CONNECTOR) 6P
CNJ216	O	1-560-301-00	POST HEADER (IL CONNECTOR) 4P
CNJ217	O	1-560-299-00	POST HEADER (IL CONNECTOR) 2P
CNJ218	O	1-560-300-00	POST HEADER (IL CONNECTOR) 3P
CNJ219	O	1-560-300-00	POST HEADER (IL CONNECTOR) 3P
CNJ220	O	1-560-299-00	POST HEADER (IL CONNECTOR) 2P

Ref. No.	SP	SONY Parts No.	Description
D1	S	8-719-911-19	1SS119
D2	S	8-719-911-19	1SS119
D3	S	8-719-911-19	1SS119
K1	S	1-515-658-11	RELAY,DPDT 5V
K2	S	1-515-658-11	RELAY,DPDT 5V
K3	S	1-515-658-11	RELAY,DPDT 5V
L1	S	1-408-092-00	INDUCTOR,MICRO 330MH 5%
L2	S	1-408-092-00	INDUCTOR,MICRO 330MH 5%
L3	S	1-408-092-00	INDUCTOR,MICRO 330MH 5%
R1	S	1-214-557-00	METAL FILM 1K 1% 1/8W
R2	S	1-214-557-00	METAL FILM 1K 1% 1/8W
R3	S	1-214-557-00	METAL FILM 1K 1% 1/8W
R4	S	1-214-557-00	METAL FILM 1K 1% 1/8W
R5	S	1-214-561-00	METAL FILM 1.5K 1% 1/8W
R6	S	1-214-561-00	METAL FILM 1.5K 1% 1/8W
T1	S	T-9413-670-2	TRANSFORMER
T2	S	T-9480-936-1	BIAS TRANSFORMER
T3	S	T-9480-952-1	ERASE TRANSFORMER
T4	S	T-9413-670-2	TRANSFORMER
T5	S	T-9480-936-1	BIAS TRANSFORMER
T6	S	T-9480-952-1	ERASE TRANSFORMER
T7	S	T-9413-670-2	TRANSFORMER
T8	S	T-9480-936-1	BIAS TRANSFORMER
T9	S	T-9480-952-1	ERASE TRANSFORMER

Ref. No.	SP	SONY Parts No.	Description
HES BOARD			
	O	A-7850-351-A	MOUNTED PCB,HES
			(This assembly includes the following parts.)
C1	S	1-161-485-00	CERAMIC 0.1MF 50V
C2	S	1-161-485-00	CERAMIC 0.1MF 50V
C3	S	1-161-485-00	CERAMIC 0.1MF 50V
C4	S	1-126-096-11	ELECT 10MF 20% 25V
C5	S	1-126-096-11	ELECT 10MF 20% 25V
C6	S	1-161-485-00	CERAMIC 0.1MF 50V
CNJ401	O	1-560-310-00	POST HEADER (IL CONNECTOR) 4P
D1	S	8-719-109-85	RD5.1ES-B2
IC1	S	T-9412-310-1	634SS2 HALL EFF SENSOR
IC2	S	8-759-910-83	TL072ACP
R1	S	1-249-429-11	CARBON 10K 5% 1/4W
R2	S	1-249-429-11	CARBON 10K 5% 1/4W
R3	S	1-249-441-11	CARBON 75K 5% 1/4W
R4	S	1-249-441-11	CARBON 75K 5% 1/4W
R5	S	1-249-429-11	CARBON 10K 5% 1/4W
R6	S	1-249-429-11	CARBON 10K 5% 1/4W
R7	S	1-249-429-11	CARBON 10K 5% 1/4W
R8	S	1-249-429-11	CARBON 10K 5% 1/4W
R9	S	1-249-429-11	CARBON 10K 5% 1/4W
R10	S	1-249-393-11	CARBON 10 5% 1/4W
R11	S	1-249-393-11	CARBON 10 5% 1/4W
R12	S	1-249-417-11	CARBON 1K 5% 1/4W
R13	S	1-249-429-11	CARBON 10K 5% 1/4W
R14	S	1-249-429-11	CARBON 10K 5% 1/4W
RV1	S	1-228-460-00	ADJ,CERMET 20K
RV2	S	1-228-460-00	ADJ,CERMET 20K

Ref. No.	SP	SONY Parts No.	Description

KBD BOARD

	O	A-7850-357-A	MOUNTED PCB,KBD (For APR-5003V)
	O	A-7850-465-A	MOUNTED PCB,KBD (For APR-5002)
			(These assemblies include the following parts.)
	O	1-937-562-11	HARNESS (ANTI-STATIC)
C1	S	1-161-485-00	CERAMIC 0.1MF 50V
C2	S	1-124-242-00	ELECT 33MF 20% 25V
C3	S	1-124-242-00	ELECT 33MF 20% 25V
C4	S	1-124-242-00	ELECT 33MF 20% 25V
C5	S	1-124-584-00	ELECT 100MF 20% 10V
C6	S	1-161-485-00	CERAMIC 0.1MF 50V
C7	S	1-161-485-00	CERAMIC 0.1MF 50V
C8	S	1-161-485-00	CERAMIC 0.1MF 50V
C9	S	1-161-485-00	CERAMIC 0.1MF 50V
C10	S	1-161-485-00	CERAMIC 0.1MF 50V
C11	S	1-161-485-00	CERAMIC 0.1MF 50V
C12	S	1-161-485-00	CERAMIC 0.1MF 50V
C13	S	1-161-485-00	CERAMIC 0.1MF 50V
C14	S	1-161-485-00	CERAMIC 0.1MF 50V
C15	S	1-162-667-11	CERAMIC 10PF 5% 50V
C16	S	1-162-790-11	CERAMIC 0.0047MF 10% 50V
C17	S	1-161-485-00	CERAMIC 0.1MF 50V
C18	S	1-161-485-00	CERAMIC 0.1MF 50V
C19	S	1-161-485-00	CERAMIC 0.1MF 50V
C20	S	1-161-485-00	CERAMIC 0.1MF 50V
C21	S	1-161-485-00	CERAMIC 0.1MF 50V
C22	S	1-161-485-00	CERAMIC 0.1MF 50V
C24	S	1-161-485-00	CERAMIC 0.1MF 50V
C25	S	1-161-485-00	CERAMIC 0.1MF 50V
C26	S	1-161-485-00	CERAMIC 0.1MF 50V
C27	S	1-161-485-00	CERAMIC 0.1MF 50V
C31	S	1-126-096-11	ELECT 10MF 20% 25V
C32	S	1-161-485-00	CERAMIC 0.1MF 50V
C34	S	1-161-473-00	CERAMIC 0.01MF 10% 50V
C35	S	T-9413-408-1	0.001MF 100V NPO
C36	S	T-9413-408-1	0.001MF 100V NPO
C37	S	1-162-734-11	CERAMIC 0.001MF 10% 50V
C38	S	1-162-734-11	CERAMIC 0.001MF 10% 50V
C39	S	1-162-734-11	CERAMIC 0.001MF 10% 50V
C40	S	1-161-485-00	CERAMIC 0.1MF 50V

Ref. No.	SP	SONY Parts No.	Description
C41	S	1-161-485-00	CERAMIC 0.1MF 50V
C42	S	1-161-485-00	CERAMIC 0.1MF 50V
C43	S	1-161-485-00	CERAMIC 0.1MF 50V
C44	S	1-161-485-00	CERAMIC 0.1MF 50V
C45	S	1-161-485-00	CERAMIC 0.1MF 50V
C46	S	1-161-485-00	CERAMIC 0.1MF 50V
C47	S	1-161-485-00	CERAMIC 0.1MF 50V
C48	S	1-161-485-00	CERAMIC 0.1MF 50V
C49	S	1-161-485-00	CERAMIC 0.1MF 50V
CNJ430	O	T-9411-085-1	HEADER,STRAIGHT POST 34P
CNJ431	O	T-9411-085-1	HEADER,STRAIGHT POST 34P
CNJ432	O	1-937-563-11	HARNESS(CPU-KBD)
CNJ433	O	1-560-310-00	POST HEADER (IL CONNECTOR) 4P
D1	S	8-719-109-85	RD5.1ES-B2
D2	S	8-719-911-19	1SS119
D3	S	8-719-911-19	1SS119
D4	S	8-719-911-19	1SS119
D5	S	8-719-911-19	1SS119
D6	S	8-719-911-19	1SS119
D7	S	8-719-911-19	1SS119
D8	S	8-719-911-19	1SS119
D9	S	8-719-911-19	1SS119
D10	S	8-719-911-19	1SS119
D11	S	8-719-911-19	1SS119
D12	S	8-719-911-19	1SS119
D13	S	8-719-911-19	1SS119
D14	S	8-719-911-19	1SS119
D15	S	8-719-911-19	1SS119
D18	S	8-719-911-19	1SS119
D19	S	8-719-911-19	1SS119
D20	S	8-719-911-19	1SS119
D21	S	8-719-911-19	1SS119
D22	S	8-719-911-19	1SS119
D23	S	8-719-911-19	1SS119
D24	S	8-719-911-19	1SS119
D25	S	8-719-911-19	1SS119
D26	S	8-719-911-19	1SS119
D27	S	8-719-911-19	1SS119
D31	S	8-719-911-19	1SS119
DS1	S	8-719-902-19	DIODE GL-4NG2
DS2	S	8-719-902-19	DIODE GL-4NG2
DS3	S	8-719-902-19	DIODE GL-4NG2
DS4	S	8-719-902-19	DIODE GL-4NG2

Ref. No.	SP	SONY Parts No.	Description
IC1	S	8-759-202-56	TC74HC245P
IC2	S	8-759-937-38	ICM7218D
IC3	S	8-759-937-38	ICM7218D
IC4	S	8-759-202-74	TC74HC04P
IC5	S	8-759-202-74	TC74HC04P
IC6	S	8-759-202-74	TC74HC04P
IC7	S	8-759-202-11	TC74HC00P
IC8	S	8-759-909-33	LM311P
IC9	S	8-759-202-56	TC74HC245P
IC10	S	8-759-202-74	TC74HC04P
IC11	S	8-759-202-21	TC74HC32P
IC12	S	8-759-000-99	MC74HC74N
IC13	S	8-759-203-40	TC74HC393P
IC14	S	8-759-100-88	uPD8279C-5
IC15	S	8-759-202-26	TC74HC138P
IC16	S	8-759-202-26	TC74HC138P
IC17	S	8-759-202-17	TC74HC14P
IC18	S	8-759-202-14	TC74HC08P
IC19	S	8-759-202-14	TC74HC08P
IC20	S	8-759-990-04	TL074CN
IC22	S	8-759-910-83	TL072ACP
IC23	S	8-759-909-72	CX7912A (For APR-5003V only)
Q1	S	8-729-113-08	2N3906
Q2	S	8-729-113-08	2N3906
Q3	S	8-729-113-08	2N3906
Q4	S	8-729-113-08	2N3906
Q5	S	8-729-113-08	2N3906
Q6	S	8-729-113-08	2N3906
Q7	S	8-729-113-08	2N3906
Q8	S	8-729-113-08	2N3906
Q9	S	8-729-113-08	2N3906
Q10	S	8-729-139-04	2N3904
Q11	S	8-729-139-04	2N3904
Q12	S	8-729-139-04	2N3904
Q13	S	8-729-139-04	2N3904
Q14	S	8-729-139-04	2N3904
Q15	S	8-729-139-04	2N3904
Q16	S	8-729-139-04	2N3904
Q17	S	8-729-139-04	2N3904
Q18	S	8-729-139-04	2N3904
Q19	S	T-9410-287-1	SP7000-0127-02
Q20	S	T-9410-286-1	SP7000-0127-01

Ref. No.	SP	SONY Parts No.	Description
Q21	S	T-9410-286-1	SP7000-0127-01
Q22	S	T-9410-287-1	SP7000-0127-02
Q23	S	8-729-139-04	2N3904
Q24	S	8-729-904-15	VN10KM
Q25	S	8-729-139-04	2N3904
Q26	S	8-729-139-04	2N3904
Q27	S	8-729-904-15	VN10KM
Q28	S	8-729-904-15	VN10KM
Q29	S	8-729-904-15	VN10KM
Q30	S	8-729-904-15	VN10KM
Q31	S	8-729-904-15	VN10KM
R1	S	1-249-426-11	CARBON 5.6K 5% 1/4W
R2	S	1-249-426-11	CARBON 5.6K 5% 1/4W
R3	S	1-249-426-11	CARBON 5.6K 5% 1/4W
R4	S	1-249-426-11	CARBON 5.6K 5% 1/4W
R5	S	1-249-429-11	CARBON 10K 5% 1/4W
R6	S	1-249-429-11	CARBON 10K 5% 1/4W
R7	S	1-249-429-11	CARBON 10K 5% 1/4W
R8	S	1-249-429-11	CARBON 10K 5% 1/4W
R25	S	1-249-417-11	CARBON 1K 5% 1/4W
R26	S	1-249-417-11	CARBON 1K 5% 1/4W
R27	S	1-249-417-11	CARBON 1K 5% 1/4W
R28	S	1-249-417-11	CARBON 1K 5% 1/4W
R29	S	1-249-417-11	CARBON 1K 5% 1/4W
R30	S	1-249-417-11	CARBON 1K 5% 1/4W
R31	S	1-249-417-11	CARBON 1K 5% 1/4W
R32	S	1-249-417-11	CARBON 1K 5% 1/4W
R34	S	1-249-417-11	CARBON 1K 5% 1/4W
R35	S	1-249-417-11	CARBON 1K 5% 1/4W
R36	S	1-249-417-11	CARBON 1K 5% 1/4W
R37	S	1-249-417-11	CARBON 1K 5% 1/4W
R38	S	1-249-417-11	CARBON 1K 5% 1/4W
R39	S	1-249-417-11	CARBON 1K 5% 1/4W
R40	S	1-249-417-11	CARBON 1K 5% 1/4W
R42	S	1-249-407-11	CARBON 150 5% 1/4W
R43	S	1-249-407-11	CARBON 150 5% 1/4W
R44	S	1-249-407-11	CARBON 150 5% 1/4W
R45	S	1-249-407-11	CARBON 150 5% 1/4W
R46	S	1-249-407-11	CARBON 150 5% 1/4W
R47	S	1-249-407-11	CARBON 150 5% 1/4W
R48	S	1-249-407-11	CARBON 150 5% 1/4W

Ref. No.	SP	SONY Parts No.	Description
R60	S	1-249-429-11	CARBON 10K 5% 1/4W
R61	S	1-249-441-11	CARBON 100K 5% 1/4W
R62	S	1-249-417-11	CARBON 1K 5% 1/4W
R63	S	1-249-429-11	CARBON 10K 5% 1/4W
R64	S	1-249-429-11	CARBON 10K 5% 1/4W
R65	S	1-249-429-11	CARBON 10K 5% 1/4W
R66	S	T-9411-045-1	LEAD CARBON FILM 1/4W 5%
R67	S	1-249-429-11	CARBON 10K 5% 1/4W
R68	S	1-249-441-11	CARBON 100K 5% 1/4W
R69	S	1-249-429-11	CARBON 10K 5% 1/4W
R70	S	1-249-399-11	CARBON 33 5% 1/4W
R71	S	1-249-399-11	CARBON 33 5% 1/4W
R72	S	1-249-399-11	CARBON 33 5% 1/4W
R73	S	1-247-804-11	CARBON 75 5% 1/4W
R74	S	1-249-399-11	CARBON 33 5% 1/4W
R75	S	1-247-122-00	CARBON 430 5% 1/4W
R76	S	1-247-122-00	CARBON 430 5% 1/4W
R78	S	1-249-433-11	CARBON 22K 5% 1/4W
R79	S	1-247-876-11	CARBON 75K 5% 1/4W
R80	S	1-247-876-11	CARBON 75K 5% 1/4W
R81	S	1-247-876-11	CARBON 75K 5% 1/4W
R82	S	1-249-429-11	CARBON 10K 5% 1/4W
R83	S	1-249-435-11	CARBON 33K 5% 1/4W
R84	S	1-249-421-11	CARBON 2.2K 5% 1/4W
R85	S	1-249-441-11	CARBON 100K 5% 1/4W
R86	S	1-249-429-11	CARBON 10K 5% 1/4W
R87	S	1-247-903-00	CARBON 1M 5% 1/4W
R88	S	1-249-417-11	CARBON 1K 5% 1/4W
R89	S	1-249-429-11	CARBON 10K 5% 1/4W
R90	S	1-249-429-11	CARBON 10K 5% 1/4W
R91	S	1-247-903-00	CARBON 1M 5% 1/4W
R92	S	1-249-417-11	CARBON 1K 5% 1/4W
R93	S	1-249-429-11	CARBON 10K 5% 1/4W
R94	S	1-249-417-11	CARBON 1K 5% 1/4W
R95	S	1-247-832-11	CARBON 1.1K 5% 1/4W
R96	S	1-249-455-11	CARBON 4.7 5% 1/4W
R97	S	1-249-417-11	CARBON 1K 5% 1/4W
R98	S	1-249-417-11	CARBON 1K 5% 1/4W
R99	S	1-249-417-11	CARBON 1K 5% 1/4W
R100	S	1-249-417-11	CARBON 1K 5% 1/4W

Ref. No.	SP	SONY Parts No.	Description
R101	S	1-249-429-11	CARBON 10K 5% 1/4W
R102	S	1-249-429-11	CARBON 10K 5% 1/4W
R103	S	1-249-429-11	CARBON 10K 5% 1/4W
R104	S	1-249-426-11	CARBON 5.6K 5% 1/4W
R105	S	1-247-895-00	CARBON 470K 5% 1/4W
R106	S	1-247-895-00	CARBON 470K 5% 1/4W
R107	S	1-247-895-00	CARBON 470K 5% 1/4W
R108	S	1-247-895-00	CARBON 470K 5% 1/4W
R109	S	1-247-895-00	CARBON 470K 5% 1/4W
R110	S	1-247-895-00	CARBON 470K 5% 1/4W
R111	S	1-249-399-11	CARBON 33 5% 1/4W
R112	S	1-249-399-11	CARBON 33 5% 1/4W
R113	S	1-249-399-11	CARBON 33 5% 1/4W
R114	S	1-247-804-11	CARBON 75 1/4W
R115	S	1-249-399-11	CARBON 33 5% 1/4W
R116	S	1-247-710-11	CARBON 560 5% 1/4W
R117	S	1-249-429-11	CARBON 10K 5% 1/4W
RN1	S	1-231-409-00	RESISTOR BLOCK 5.6K
RN2	S	1-231-409-00	RESISTOR BLOCK 5.6K
RN3	S	1-231-399-00	RESISTOR BLOCK 330
RV2	S	1-237-500-21	ADJ,METAL FILM 1K
RV3	S	1-237-500-21	ADJ,METAL FILM 1K
RV4	S	1-237-500-21	ADJ,METAL FILM 1K
S1	S	1-554-039-51	SWITCH,PUSH
S2	S	1-554-039-41	SWITCH,PUSH(FF & REW)
S3	S	1-554-039-21	SWITCH,PUSH(PLAY)
S4	S	1-554-045-22	SWITCH,PUSH(STOP)
S5	S	1-554-040-21	SWITCH,PUSH(REC)
S6	S	1-554-039-11	SWITCH,PUSH

Ref. No.	SP	SONY Parts No.	Description
LNT BOARD			
	O	A-7850-366-A	COMPLETE PCB,LNT
			(This assembly includes the following parts.)
	S	1-561-832-00	SOCKET,SHORT
C1	S	1-161-485-00	CERAMIC 0.1MF 50V
C2	S	1-161-485-00	CERAMIC 0.1MF 50V
C3	S	1-124-589-11	ELECT 47MF 20% 10V
C5	S	1-161-485-00	CERAMIC 0.1MF 50V
C6	S	1-161-485-00	CERAMIC 0.1MF 50V
C7	S	1-161-485-00	CERAMIC 0.1MF 50V
C8	S	1-161-485-00	CERAMIC 0.1MF 50V
C9	S	1-161-485-00	CERAMIC 0.1MF 50V
C10	S	1-123-357-00	ELECT 22MF 20% 35V
C11	S	1-161-485-00	CERAMIC 0.1MF 50V
C12	S	1-161-485-00	CERAMIC 0.1MF 50V
C13	S	1-161-485-00	CERAMIC 0.1MF 50V
C14	S	1-161-485-00	CERAMIC 0.1MF 50V
C15	S	1-161-485-00	CERAMIC 0.1MF 50V
CNJ440	O	1-564-700-21	CONNECTOR,RIBBON CABLE 40P
CNJ441	O	1-564-700-21	CONNECTOR,RIBBON CABLE 40P
CNJ952	O	1-560-303-00	POST HEADER (IL CONNECTOR) 6P
D1	S	8-719-911-19	1SS119
IC1	S	8-759-000-XX	MC74HC74N
IC2	S	8-759-202-55	TC74HC244P
IC3	S	8-759-203-35	TC74HC373P
IC4	S	8-759-202-74	TC74HC04P
IC5	S	8-759-202-26	TC74HC138P
IC6	S	8-752-321-00	CXK5816PN-12L
IC7	S	8-759-202-55	TC74HC244P
IC8	S	8-759-202-26	TC74HC138P
IC9	S	8-759-202-26	TC74HC138P
IC10	S	8-759-202-55	TC74HC244P
IC11	S	8-759-903-77	SN74LS377N
IC12	S	8-759-202-26	TC74HC138P
IC13	S	8-759-773-36	27128-LNT13V2.0
IC14	S	8-759-202-14	TC74HC08P
IC15	S	8-759-202-30	TC74HC161P

Ref. No.	SP	SONY Parts No.	Description
IC16	S	8-759-202-30	TC74HC161P
IC17	S	8-759-202-30	TC74HC161P
IC18	S	8-759-202-56	TC74HC245P
IC19	S	8-759-901-89	SN74LS189AN
IC20	S	8-759-901-89	SN74LS189AN
IC21	S	8-759-180-85	uPD8085AC
IC22	S	8-759-202-56	TC74HC245P
IC23	S	8-759-901-89	SN74LS189AN
IC24	S	8-759-901-89	SN74LS189AN
IC25	S	8-759-938-45	Z8530PC
IC26	S	8-759-202-21	TC74HC32P
IC27	S	8-759-202-74	TC74HC04P
IC28	S	8-759-202-21	TC74HC32P
IC29	S	8-759-202-14	TC74HC08P
IC30	S	8-759-202-11	MC74HC00N
IC31	S	8-759-202-21	TC74HC32P
IC32	S	8-759-202-11	MC74HC00N
JW1	S	1-566-388-11	PIN,SHORT
JW2	S	1-566-388-11	PIN,SHORT
JW3	S	1-566-388-11	PIN,SHORT
JW4	S	1-566-388-11	PIN,SHORT
L1	S	1-421-329-00	COIL,CHOKE
R1	S	1-249-429-11	CARBON 10K 5% 1/4W
R2	S	1-249-441-11	CARBON 100K 5% 1/4W
R3	S	1-249-441-11	CARBON 100K 5% 1/4W
R4	S	1-249-417-11	CARBON 1K 5% 1/4W
R5	S	1-249-429-11	CARBON 10K 5% 1/4W
R6	S	1-249-429-11	CARBON 10K 5% 1/4W
R7	S	1-249-429-11	CARBON 10K 5% 1/4W
R8	S	1-249-405-11	CARBON 100 5% 1/4W
R9	S	1-249-405-11	CARBON 100 5% 1/4W
RN1	S	1-231-410-00	RESISTOR BLOCK,10K
RN2	S	1-231-410-00	RESISTOR BLOCK,10K
RN3	S	1-231-410-00	RESISTOR BLOCK,10K
RN4	S	1-231-410-00	RESISTOR BLOCK,10K
RN5	S	1-231-410-00	RESISTOR BLOCK,10K
RN6	S	1-231-410-00	RESISTOR BLOCK,10K
RN7	S	1-231-410-00	RESISTOR BLOCK,10K
S1	S	1-516-925-21	SWITCH,DIP
Y1	S	1-527-847-00	OSC 6.144MHz

Ref. No.	SP	SONY Parts No.	Description
MSB BOARD			
	O	1-619-159-11	PC BOARD,MSB
	S	4-903-740-01	FRAME, FITTING (SQUARE 10)
	S	4-903-741-01	KEY TOP (SQUARE 10)(WINDOW)
CNJ232	O	1-560-302-00	POST HEADER (IL CONNECTOR) 5P
R1	S	1-249-405-11	CARBON 100 5% 1/4W
R2	S	1-249-405-11	CARBON 100 5% 1/4W
S1	S	1-554-750-21	SWITCH,KEY BOARD (WITH LED)
S2	S	1-554-750-21	SWITCH,KEY BOARD (WITH LED)
MST BOARD			
	O	A-7850-376-A	COMPLETE PCB,MST (This assembly includes the following parts.)
	S	2-251-622-11	LEVER, PC BOARD
	O	3-673-867-11	PLATE, INDICATION, PC BOARD
	S	3-703-207-11	INSULATOR, TO-220
	O	3-711-001-02	LABEL, AUDIO MASTER CARD
	O	3-711-319-03	HEAT SINK (A), MST
	S	7-623-955-01	WASHER, PC BOARD
	S	7-626-317-21	PIN, SPRING 2.5x8
	S	7-682-650-09	SCREW, PSW3x12
	S	7-684-023-04	N3, TYPE2
C1	S	1-123-333-00	ELECT 100MF 20% 25V
C2	S	1-123-333-00	ELECT 100MF 20% 25V
C3	S	1-123-333-00	ELECT 100MF 20% 25V
C4	S	1-124-438-00	ELECT 1MF 20% 50V
C5	S	1-124-438-00	ELECT 1MF 20% 50V
C6	S	1-124-438-00	ELECT 1MF 20% 50V
C7	S	1-124-438-00	ELECT 1MF 20% 50V
C8	S	1-124-438-00	ELECT 1MF 20% 50V
C9	S	1-124-438-00	ELECT 1MF 20% 50V
C10	S	1-162-671-11	CERAMIC 22PF 5% 50V
C12	S	1-124-274-00	ELECT 4.7MF 20% 50V
C13	S	1-161-485-00	CERAMIC 0.1MF 50V
C14	S	1-161-485-00	CERAMIC 0.1MF 50V
C15	S	1-162-726-11	CERAMIC 470PF 5% 50V
C16	S	1-162-718-11	CERAMIC 220PF 5% 50V

Ref. No.	SP	SONY Parts No.	Description			
C17	S	1-161-485-00	CERAMIC	0.1MF		50V
C18	S	1-161-485-00	CERAMIC	0.1MF		50V
C19	S	1-162-724-11	CERAMIC	390PF	5%	50V
C20	S	1-162-873-11	CERAMIC	56PF	5%	50V
C21	S	1-161-473-00	CERAMIC	0.01MF	10%	50V
C22	S	1-161-473-00	CERAMIC	0.01MF	10%	50V
C23	S	1-123-357-00	ELECT	22MF	20%	35V
C24	S	1-123-357-00	ELECT	22MF	20%	35V
C25	S	1-123-357-00	ELECT	22MF	20%	35V
C26	S	1-123-357-00	ELECT	22MF	20%	35V
C27	S	1-123-357-00	ELECT	22MF	20%	35V
C28	S	1-123-357-00	ELECT	22MF	20%	35V
C29	S	1-123-357-00	ELECT	22MF	20%	35V
C30	S	1-123-357-00	ELECT	22MF	20%	35V
C31	S	1-123-357-00	ELECT	22MF	20%	35V
C32	S	1-123-357-00	ELECT	22MF	20%	35V
C33	S	1-123-357-00	ELECT	22MF	20%	35V
C34	S	1-123-357-00	ELECT	22MF	20%	35V
C35	S	1-123-357-00	ELECT	22MF	20%	35V
C36	S	1-123-357-00	ELECT	22MF	20%	35V
C37	S	1-123-357-00	ELECT	22MF	20%	35V
C38	S	1-123-357-00	ELECT	22MF	20%	35V
C39	S	1-161-485-00	CERAMIC	0.1MF		50V
C40	S	1-161-485-00	CERAMIC	0.1MF		50V
C41	S	1-161-485-00	CERAMIC	0.1MF		50V
C42	S	1-161-485-00	CERAMIC	0.1MF		50V
C43	S	1-161-485-00	CERAMIC	0.1MF		50V
C44	S	1-161-485-00	CERAMIC	0.1MF		50V
C45	S	1-161-485-00	CERAMIC	0.1MF		50V
C49	S	1-161-485-00	CERAMIC	0.1MF		50V
C50	S	1-161-485-00	CERAMIC	0.1MF		50V
C51	S	1-161-485-00	CERAMIC	0.1MF		50V
C52	S	1-161-485-00	CERAMIC	0.1MF		50V
C53	S	1-161-485-00	CERAMIC	0.1MF		50V
C54	S	1-161-485-00	CERAMIC	0.1MF		50V
C55	S	1-161-485-00	CERAMIC	0.1MF		50V
C56	S	1-161-485-00	CERAMIC	0.1MF		50V
C57	S	1-161-485-00	CERAMIC	0.1MF		50V
C58	S	1-161-485-00	CERAMIC	0.1MF		50V
C59	S	1-161-485-00	CERAMIC	0.1MF		50V
C60	S	1-161-485-00	CERAMIC	0.1MF		50V
C61	S	1-161-485-00	CERAMIC	0.1MF		50V
C62	S	1-161-485-00	CERAMIC	0.1MF		50V
C66	S	1-162-672-11	CERAMIC	27PF	5%	50V
C67	S	1-162-674-11	CERAMIC	39PF	5%	50V

Ref. No.	SP	SONY Parts No.	Description
C68	S	1-162-671-11	CERAMIC 22PF 5% 50V
C69	S	1-162-671-11	CERAMIC 22PF 5% 50V
C70	S	1-162-671-11	CERAMIC 22PF 5% 50V
C71	S	1-162-671-11	CERAMIC 22PF 5% 50V
C72	S	1-162-671-11	CERAMIC 22PF 5% 50V
C73	S	1-162-671-11	CERAMIC 22PF 5% 50V
C74	S	1-162-714-11	CERAMIC 150PF 5% 50V
C75	S	1-162-664-11	CERAMIC 1800PF 10% 50V
C76	S	1-162-664-11	CERAMIC 1800PF 10% 50V
C77	S	1-162-664-11	CERAMIC 1800PF 10% 50V
C78	S	1-123-357-00	ELECT 22MF 20% 35V
CNI22	O	1-526-658-21	SOCKET,IC (DP) 24P
CNI23	O	1-526-658-21	SOCKET,IC (DP) 24P
CNI24	O	1-526-658-21	SOCKET,IC (DP) 24P
D1	S	8-719-911-19	1SS119
D2	S	8-719-911-19	1SS119
D3	S	8-719-911-19	1SS119
D4	S	8-719-911-19	1SS119
D5	S	8-719-939-39	GL-5HD8
IC1	S	8-759-910-83	TL072ACP
IC2	S	8-759-907-01	TL071CP
IC3	S	8-759-340-13	HD14013BP
IC4	S	8-759-340-13	HD14013BP
IC5	S	8-719-939-39	GL-5HD8
IC6	S	8-759-200-56	TC4526BP
IC7	S	8-759-903-17	LM318N
IC8	S	8-759-903-17	LM318N
IC9	S	8-759-903-17	LM318N
IC10	S	8-759-903-17	LM318N
IC11	S	8-759-903-17	LM318N
IC12	S	8-759-903-17	LM318N
IC13	S	8-759-202-21	TC74HC32P
IC14	S	8-759-240-01	TC4001BP
IC15	S	8-759-340-13	HD14013BP
IC16	S	8-759-045-57	MC14557BCP
IC17	S	8-759-045-57	MC14557BCP
IC18	S	8-759-200-56	TC4526BP
IC19	S	8-759-200-56	TC4526BP
IC20	S	8-759-903-37	LM337T
IC21	S	8-759-003-17	LM317T
IC22	S	T-9413-995-1	TBP28L86 MST V2.0
IC23	S	T-9413-995-1	TBP28L86 MST V2.0
IC24	S	T-9413-995-1	TBP28L86 MST V2.0
IC25	S	8-759-202-12	TC74HC02P

Ref. No.	SP	SONY Parts No.	Description
IC26	S	8-759-202-21	TC74HC32P
IC27	S	8-759-202-55	TC74HC244P
IC28	S	8-759-203-48	TC74HC573P
IC29	S	8-759-203-48	TC74HC573P
IC30	S	8-759-203-48	TC74HC573P
JW1	S	1-566-388-11	PIN, SHORT
JW2	S	1-566-388-11	PIN, SHORT
JW3	S	1-566-388-11	PIN, SHORT
JW4	S	1-566-388-11	PIN, SHORT
JW5	S	1-566-388-11	PIN, SHORT
JW6	S	1-566-388-11	PIN, SHORT
L1	S	1-409-339-00	COIL,SN
L2	S	T-9412-204-1	INDUCTOR 5MH
L3	S	1-408-092-00	INDUCTOR,MICRO 33MH 5%
Q1	S	8-729-139-04	2N3904
Q2	S	T-9410-035-1	MJE105
R1	S	1-247-903-00	CARBON 1M 5% 1/4W
R2	S	1-247-903-00	CARBON 1M 5% 1/4W
R3	S	1-247-903-00	CARBON 1M 5% 1/4W
R4	S	1-214-533-00	METAL FILM 100 1% 1/8W
R7	S	1-214-581-00	METAL FILM 10K 1% 1/8W
R8	S	1-214-581-00	METAL FILM 10K 1% 1/8W
R9	S	1-214-574-00	METAL FILM 5.1K 1% 1/8W
R10	S	1-214-541-00	METAL FILM 220 1% 1/8W
R11	S	1-214-541-00	METAL FILM 220 1% 1/8W
R12	S	1-214-581-00	METAL FILM 10K 1% 1/8W
R13	S	1-215-830-11	METAL FILM 100K 1% 1/8W
R14	S	1-214-557-00	METAL FILM 1K 1% 1/8W
R15	S	1-214-578-00	METAL FILM 7.5K 1% 1/8W
R16	S	1-214-591-00	METAL FILM 27K 1% 1/8W
R17	S	1-214-581-00	METAL FILM 10K 1% 1/8W
R18	S	1-214-574-00	METAL FILM 5.1K 1% 1/8W
R19	S	1-214-541-00	METAL FILM 220 1% 1/8W
R20	S	1-214-541-00	METAL FILM 220 1% 1/8W
R21	S	1-214-581-00	METAL FILM 10K 1% 1/8W
R22	S	1-215-830-11	METAL FILM 100K 1% 1/8W
R23	S	1-214-557-00	METAL FILM 1K 1% 1/8W
R24	S	1-214-563-00	METAL FILM 1.8K 1% 1/8W
R25	S	1-247-862-11	CARBON 20K 5% 1/4W
R26	S	1-214-581-00	METAL FILM 10K 1% 1/8W
R27	S	1-214-549-00	METAL FILM 470 1% 1/8W
R28	S	1-214-549-00	METAL FILM 470 1% 1/8W
R29	S	1-214-573-00	METAL FILM 4.7K 1% 1/8W
R30	S	1-214-573-00	METAL FILM 4.7K 1% 1/8W
R31	S	1-214-557-00	METAL FILM 1K 1% 1/8W
R32	S	1-247-688-11	CARBON 10 5% 1/4W

Ref. No.	SP	SONY Parts No.	Description			
R33	S	1-247-688-11	CARBON	10	5%	1/4W
R34	S	1-247-688-11	CARBON	10	5%	1/4W
R35	S	1-247-688-11	CARBON	10	5%	1/4W
R36	S	1-247-688-11	CARBON	10	5%	1/4W
R37	S	1-247-688-11	CARBON	10	5%	1/4W
R38	S	1-247-688-11	CARBON	10	5%	1/4W
R39	S	1-247-688-11	CARBON	10	5%	1/4W
R40	S	1-247-688-11	CARBON	10	5%	1/4W
R41	S	1-247-688-11	CARBON	10	5%	1/4W
R42	S	1-247-688-11	CARBON	10	5%	1/4W
R43	S	1-247-688-11	CARBON	10	5%	1/4W
R44	S	1-247-688-11	CARBON	10	5%	1/4W
R45	S	1-247-688-11	CARBON	10	5%	1/4W
R46	S	1-247-688-11	CARBON	10	5%	1/4W
R47	S	1-247-688-11	CARBON	10	5%	1/4W
R48	S	1-215-822-11	METAL FILM	47K	1%	1/8W
R49	S	1-215-822-11	METAL FILM	47K	1%	1/8W
R50	S	1-215-822-11	METAL FILM	47K	1%	1/8W
R51	S	1-215-822-11	METAL FILM	47K	1%	1/8W
R52	S	1-215-822-11	METAL FILM	47K	1%	1/8W
R53	S	1-215-822-11	METAL FILM	47K	1%	1/8W
R54	S	1-215-822-11	METAL FILM	47K	1%	1/8W
R55	S	1-215-822-11	METAL FILM	47K	1%	1/8W
R56	S	1-215-822-11	METAL FILM	47K	1%	1/8W
R57	S	1-215-822-11	METAL FILM	47K	1%	1/8W
R58	S	1-215-822-11	METAL FILM	47K	1%	1/8W
R59	S	1-215-822-11	METAL FILM	47K	1%	1/8W
R60	S	1-215-822-11	METAL FILM	47K	1%	1/8W
R61	S	1-215-822-11	METAL FILM	47K	1%	1/8W
R62	S	1-215-822-11	METAL FILM	47K	1%	1/8W
R63	S	1-215-822-11	METAL FILM	47K	1%	1/8W
R64	S	1-215-822-11	METAL FILM	47K	1%	1/8W
R65	S	1-247-741-11	CARBON	150	5%	1/2W
R66	S	1-214-581-00	METAL FILM	10K	1%	1/8W
R67	S	1-214-581-00	METAL FILM	10K	1%	1/8W
R70	S	1-214-567-00	METAL FILM	2.7K	1%	1/8W
R71	S	1-214-567-00	METAL FILM	2.7K	1%	1/8W
R72	S	1-214-567-00	METAL FILM	2.7K	1%	1/8W
R73	S	1-214-567-00	METAL FILM	2.7K	1%	1/8W
R74	S	1-214-573-00	METAL FILM	4.7K	1%	1/8W
R75	S	1-214-533-00	METAL FILM	100	1%	1/8W
R76	S	1-214-533-00	METAL FILM	100	1%	1/8W
R77	S	1-215-830-11	METAL FILM	100K	1%	1/8W
R78	S	1-214-581-00	METAL FILM	10K	1%	1/8W
R79	S	1-247-225-00	CARBON	240	5%	1/2W
R80	S	1-247-225-00	CARBON	240	5%	1/2W

Ref. No.	SP	SONY Parts No.	Description
RN1	S	1-235-005-00	RESISTOR BLOCK 47K
RN2	S	1-235-005-00	RESISTOR BLOCK 47K
RN3	S	1-235-005-00	RESISTOR BLOCK 47K
RN4	S	1-235-005-00	RESISTOR BLOCK 47K
RV1	S	1-237-332-11	ADJ,CERMET 2K
RV2	S	1-228-932-00	ADJ,CERMET 10K
RV3	S	1-237-517-21	ADJ, METAL FILM 5K
RV4	S	1-237-517-21	ADJ, METAL FILM 5K

PDB BOARD

	O	A-7850-341-A	MOUNTED PCB,PDB
			(This assembly includes the following parts.)
	S	9-911-863-XX	SPACER
C1	S	1-123-334-00	ELECT 220MF 20% 25V
C2	S	1-123-334-00	ELECT 220MF 20% 25V
CNJ900	O	1-560-815-00	CONNECTOR WITH LOCK 4P
CNJ901	O	1-560-259-00	CONNECTOR WITH LOCK 6P
CNJ902-1	O	1-564-794-11	WAFER ASSY 7P
CNJ902-2	O	1-560-259-00	CONNECTOR WITH LOCK 6P
CNJ903	O	1-560-260-00	CONNECTOR WITH LOCK 9P
CNJ904	O	1-560-304-00	POST HEADER (IL CONNECTOR) 8P
CNJ905	O	1-560-305-00	POST HEADER (IL CONNECTOR) 10P
CNJ906	O	1-560-303-00	POST HEADER (IL CONNECTOR) 6P
CNJ907	O	1-560-302-00	POST HEADER (IL CONNECTOR) 5P
CNJ908	O	1-508-776-00	CONNECTOR WITH LOCK 10P
CNJ910	O	1-564-693-21	CONNECTOR,RIBBON CABLE 10P
CNJ911	O	1-560-260-00	CONNECTOR WITH LOCK 9P
CNJ912	O	1-564-797-11	WAFER ASSY 10P
CNJ916	O	1-564-797-11	WAFER ASSY 10P
D1	S	8-719-940-03	1N4004
D2	S	8-719-940-03	1N4004
IC1	S	8-759-909-33	LM311P
R1	S	1-214-557-00	METAL FILM 1K 1% 1/8W
R2	S	1-214-568-00	METAL FILM 3.0K 1% 1/8W
R3	S	1-214-581-00	METAL FILM 10K 1% 1/8W
R4	S	1-214-575-00	METAL FILM 5.6K 1% 1/8W
R5	S	1-215-824-11	METAL FILM 56K 1% 1/8W
R6	S	1-249-417-11	CARBON 1K 5% 1/4W
RV1	S	1-237-516-21	ADJ,METAL FILM 2K
SW1	S	T-9412-737-1	SW G-660-S
SW2	S	T-9412-738-1	SW GF-626

Ref. No.	SP	SONY Parts No.	Description			

RGA BOARD

(APR-5002: Serial No. 20001 to 20700)

	O	A-7850-342-A	MOUNTED PCB,RGA (This assembly includes the following parts.)			
C1	S	1-123-619-00	ELECT	4.7MF	20%	50V
C2	S	1-161-894-11	CERAMIC	0.1MF		50V
C3	S	1-124-002-11	ELECT	1MF	20%	50V
C4	S	1-123-356-00	ELECT	10MF	20%	25V
CNJ960	O	1-564-979-11	PIN,CONNECTOR (RIGHT ANGLE) 4P			
D1	S	8-719-904-55	GL-5HD5			
D2	S	8-719-911-19	1SS119			
D3	S	8-719-230-04	30D4			
D4	S	8-719-940-03	1N4004			
D5	S	8-719-940-03	1N4004			
D6	S	8-719-940-03	1N4004			
D7	S	8-719-100-38	RD6.2EB2			
F1	S	T-9413-675-1	FUSE 7A			
Q1	S	8-729-113-08	2N3906			
Q2	S	T-9413-258-1	MJ2955A			
Q3	S	8-759-925-54	LM2940CT-5.0			
Q4	S	T-9410-021-1	1T015			
R1	S	1-214-114-00	METAL FILM	180	1%	1/4W
R2	S	1-217-054-00	RES,WIRE	1	10%	5W
R3	S	T-9412-298-1	RES,PWR	0.22HM	10%	5W
R4	S	1-247-192-00	CARBON	10	5%	1/2W
R5	S	1-247-208-00	CARBON	47	5%	1/2W
R6	S	1-247-208-00	CARBON	47	5%	1/2W
R7	S	1-246-408-00	CARBON	2	5%	1/4W

Ref. No.	SP	SONY Parts No.	Description

RGB BOARD

(APR-5002: Serial No. 20001 to 20700)

	O	A-7850-343-A	MOUNTED PCB,RGB (This assembly includes the following parts.)
C1	S	1-123-337-00	ELECT 1000MF 20% 25V
C2	S	1-123-619-00	ELECT 4.7MF 20% 50V
C3	S	1-161-894-11	CERAMIC 0.1MF 50V
C4	S	1-123-611-00	ELECT 1MF 20% 50V
C5	S	1-123-619-00	ELECT 4.7MF 20% 50V
C6	S	1-123-356-00	ELECT 10MF 20% 25V
CNJ1	O	1-564-979-11	PIN,CONNECTOR (RIGHT ANGLE) 4P
D1	S	8-719-100-38	RD6.2EB2
D2	S	8-719-100-38	RD6.2EB2
D3	S	8-719-940-03	1N4004
D4	S	8-719-940-03	1N4004
D5	S	8-719-940-03	1N4004
D6	S	8-719-100-38	RD6.2EB2
D7	S	8-719-940-03	1N4004
F1	S	1-532-782-11	FUSE,MICRO 4A
F2	S	1-532-779-11	FUSE,MICRO 2A
Q1	S	T-9410-036-1	MJE205
Q2	S	8-729-208-27	2N3055
Q3	S	T-9410-021-1	1T015
Q4	S	8-759-011-84	LM309K
Q5	S	T-9410-021-1	1T015
R1	S	1-247-232-00	CARBON 470 5% 1/2W
R2	S	1-247-240-00	CARBON 1K 5% 1/2W
R3	S	1-247-208-00	CARBON 47 5% 1/2W
R4	S	1-247-208-00	CARBON 47 5% 1/2W
R5	S	1-247-208-00	CARBON 47 5% 1/2W
R6	S	1-247-208-00	CARBON 47 5% 1/2W

Ref. No.	SP	SONY Parts No.	Description

RG-1 BOARD

(APR-5002: Serial No. 20701 and higher
APR-5003V: Serial No. 10001 and higher)

	O	A-7850-517-A	MOUNTED PCB,RG-1
			(This assembly includes the following parts.)
	O	3-711-338-01	RETAINER, TR
	O	4-904-399-01	TUBE (B), TR SARCON
	S	7-682-650-09	+PS 3X12
	S	7-682-648-09	+PSW 3X8
C1	S	1-126-104-11	ELECT 470MF 20% 35V
C2	S	1-161-063-00	CERAMIC 0.1MF 20% 50V
C3	S	1-124-791-11	ELECT 1MF 20% 50V
C4	S	1-123-875-11	ELECT 10MF 20% 50V
C5	S	1-161-063-00	CERAMIC 0.1MF 20% 50V
C6	S	1-124-791-11	ELECT 1MF 20% 50V
C7	S	1-123-382-00	ELECT 33MF 20% 50V
CN960	O	1-560-815-00	PIN, CONNECTOR 4P (WITH LOCK)
CN961	O	1-560-815-00	PIN, CONNECTOR 4P (WITH LOCK)
D1	S	8-719-109-93	RD6.2ES-B2
D2	S	8-719-940-03	1N4004
D3	S	8-719-940-03	1N4004
D4	S	8-719-940-03	1N4004
D5	S	8-719-940-03	1N4004
D6	S	8-719-230-04	30D4
D7	S	8-719-940-03	1N4004
D8	S	8-719-940-03	1N4004
D9	S	8-719-940-03	1N4004
F1	S	1-532-782-11	FUSE, MICRO (SECONDARY) 4A
F2	S	1-532-779-11	FUSE, MICRO (SECONDARY) 2A
F3	S	1-532-782-11	FUSE, MICRO (SECONDARY) 4A
F4	S	1-532-782-11	FUSE, MICRO (SECONDARY) 4A
Q1	S	8-729-313-32	2SD1133
Q2	S	8-729-201-97	2SC3182
Q3	S	8-729-178-54	2SC2785
Q4	S	8-759-171-05	uPC7805
Q5	S	8-729-117-54	2SA1175
Q6	S	8-729-201-89	2SA1265
Q7	S	8-759-925-54	LM2940CT-5.0
R1	S	1-249-413-11	CARBON 470 5% 1/4W
R2	S	1-249-417-11	CARBON 1K 5% 1/4W
R3	S	1-216-401-11	METAL FILM 0.22 5% 5W
R4	S	1-216-365-00	METAL FILM 0.47 5% 2W
R5	S	1-216-401-11	METAL FILM 0.22 5% 5W
R6	S	1-249-393-11	CARBON 10 5% 1/4W

Ref. No.	SP	SONY Parts No.	Description

RGC BOARD

(APR-5002: Serial No. 20001 to 20700)

	O	A-7850-344-A	MOUNTED PCB,RGC (This assembly includes the following parts.)
	O	1-566-163-11	PIN,CONNECTOR (RIGHT ANGLE) 5P
C1	S	1-161-894-11	CERAMIC 0.1MF 50V
C2	S	1-123-611-00	ELECT 1MF 20% 50V
C3	S	1-123-356-00	ELECT 10MF 20% 25V
C4	S	1-123-619-00	ELECT 4.7MF 20% 50V
C5	S	1-161-894-11	CERAMIC 0.1MF 50V
C6	S	1-123-611-00	ELECT 1MF 20% 50V
C7	S	1-123-356-00	ELECT 10MF 20% 25V
C8	S	1-123-619-00	ELECT 4.7MF 20% 50V
C9	S	1-123-352-11	ELECT 1MF 20% 50V
C10	S	1-161-894-11	CERAMIC 0.1MF 50V
C11	S	1-161-894-11	CERAMIC 0.1MF 50V
D1	S	8-719-907-78	PR5534S
D2	S	8-719-911-19	1SS119
D3	S	8-719-230-04	30D4
D4	S	8-719-940-03	1N4004
D5	S	8-719-940-03	1N4004
D6	S	8-719-100-86	RD22EB2
D7	S	8-719-940-03	1N4004
D8	S	8-719-907-78	PR5534S
D9	S	8-719-911-19	1SS119
D10	S	8-719-230-04	30D4
D11	S	8-719-940-03	1N4004
D12	S	8-719-100-86	RD22EB2
D13	S	8-719-940-03	1N4004
D14	S	8-719-940-03	1N4004
D15	S	8-719-940-03	1N4004
D16	S	8-719-940-03	1N4004
F1	S	T-9413-675-1	FUSE,7A
F2	S	T-9413-675-1	FUSE,7A
Q1	S	8-729-139-04	2N3904
Q2	S	8-759-937-23	LM337K
Q3	S	8-729-208-27	2N3055
Q4	S	T-9410-021-1	1T015
Q5	S	8-729-113-08	2N3906
Q6	S	T-9410-021-1	1T015
Q7	S	8-759-011-85	LM317K
Q8	S	T-9413-258-1	MJ2955A

Ref. No.	SP	SONY Parts No.	Description
R1	S	1-247-707-11	CARBON 390 5% 1/4W
R2	S	T-9412-299-1	0.33HM 10% 5W
R3	S	1-217-054-00	RES,WIRE 1 10% 5W
R4	S	1-247-192-00	CARBON 10 5% 1/2W
R5	S	1-247-208-00	CARBON 47 5% 1/2W
R6	S	1-247-208-00	CARBON 47 5% 1/2W
R7	S	1-247-707-11	CARBON 390 5% 1/4W
R8	S	1-217-054-00	RES,WIRE 1 10% 5W
R9	S	1-247-208-00	CARBON 47 5% 1/2W
R10	S	1-247-208-00	CARBON 47 5% 1/2W
R11	S	1-247-192-00	CARBON 10 5% 1/2W
R12	S	T-9412-299-1	0.33HM 10% 5W
R13	S	T-9411-677-1	CARBON 3.16 1% 1/8W
R14	S	1-247-116-00	CARBON 240 5% 1/4W
R15	S	T-9411-677-1	CARBON 3.16 1% 1/8W
R16	S	1-247-116-00	CARBON 240 5% 1/4W

RGD BOARD

(APR-5002: Serial No. 20001 to 20700)

O A-7850-345-A MOUNTED PCB,RGD
(This assembly includes the following parts.)

O 1-566-163-11 PIN,CONNECTOR (RIGHT ANGLE) 5P

C1	S	1-123-611-00	ELECT 1MF 20% 50V
C2	S	1-123-356-00	ELECT 10MF 20% 25V
C3	S	1-123-619-00	ELECT 4.7MF 20% 50V
C4	S	1-161-894-11	CERAMIC 0.1MF 50V
C5	S	1-123-611-00	ELECT 1MF 20% 50V
C6	S	1-123-619-00	ELECT 4.7MF 20% 50V
C7	S	1-161-894-11	CERAMIC 0.1MF 50V
C8	S	1-123-619-00	ELECT 4.7MF 20% 50V
C9	S	1-123-611-00	ELECT 1MF 20% 50V
C10	S	1-123-356-00	ELECT 10MF 20% 25V
C11	S	1-123-611-00	ELECT 1MF 20% 50V
C12	S	1-123-619-00	ELECT 4.7MF 20% 50V
CNJ1-1	O	1-564-979-11	CONNECTOR (RIGHT ANGLE) 4P
CNJ1-2	O	1-566-163-11	CONNECTOR (RIGHT ANGLE) 5P

Ref. No.	SP	SONY Parts No.	Description
D1	S	8-719-940-03	1N4004
D2	S	8-719-940-03	1N4004
D3	S	8-719-100-86	RD22EB2
D4	S	8-719-100-94	RD27EB2
D5	S	8-719-940-03	1N4004
D6	S	8-719-940-03	1N4004
D7	S	8-719-100-94	RD27EB2
D8	S	8-719-940-03	1N4004
D9	S	8-719-100-86	RD22EB2
D10	S	8-719-940-03	1N4004
D11	S	8-719-100-94	RD27EB2
D12	S	8-719-940-03	1N4004
D13	S	8-719-100-94	RD27EB2
D14	S	8-719-940-03	1N4004
D15	S	8-719-100-77	RD18EB2
F1	S	1-532-783-11	FUSE,MICRO (SECONDARY) 5A
F2	S	1-532-783-11	FUSE,MICRO (SECONDARY) 5A
Q2	S	T-9410-036-1	MJE205
Q3	S	T-9410-021-1	1T015
Q4	S	8-729-208-27	2N3055
Q5	S	T-9410-021-1	1T015
Q6	S	T-9410-021-1	1T015
Q8	S	T-9413-258-1	MJ2955A
Q9	S	T-9410-021-1	1T015
Q10	S	T-9410-035-1	MJE105
Q11	S	T-9410-287-1	SP7000-0127-02
R2	S	1-247-208-00	CARBON 47 5% 1/2W
R3	S	1-247-208-00	CARBON 47 5% 1/2W
R4	S	1-247-232-00	CARBON 470 5% 1/2W
R5	S	1-247-240-00	CARBON 1K 5% 1/2W
R6	S	1-247-208-00	CARBON 47 5% 1/2W
R7	S	1-247-208-00	CARBON 47 5% 1/2W
R8	S	1-247-208-00	CARBON 47 5% 1/2W
R9	S	1-247-208-00	CARBON 47 5% 1/2W
R10	S	1-247-240-00	CARBON 1K 5% 1/2W
R11	S	1-247-208-00	CARBON 47 5% 1/2W
R12	S	1-247-208-00	CARBON 47 5% 1/2W
R13	S	1-247-232-00	CARBON 470 5% 1/2W
R14	S	1-215-421-00	METAL FILM 1K 1% 1/6W
R15	S	1-215-419-00	METAL FILM 820 1% 1/6W

Ref. No.	SP	SONY Parts No.	Description

RG-2 BOARD

(APR-5002: Serial No. 20701 and higher
APR-5003V: Serial No. 10001 and higher)

	O	A-7850-518-A	MOUNTED PCB,RG-2
			(This assembly includes the following parts.)
	O	3-711-338-01	RETAINER, TR
	O	4-904-398-01	TUBE (A), TR SARCON
	O	4-904-399-01	TUBE (B), TR SARCON
	S	7-682-650-09	+PS 3X12
	S	7-682-648-09	+PSW 3X8
C1	S	1-124-513-11	ELECT 47MF 20% 50V
C2	S	1-124-513-11	ELECT 47MF 20% 50V
C3	S	1-161-063-00	CERAMIC 0.1MF 20% 50V
C4	S	1-124-791-11	ELECT 1MF 20% 50V
C5	S	1-123-875-11	ELECT 10MF 20% 50V
C6	S	1-124-513-11	ELECT 47MF 20% 50V
C7	S	1-124-513-11	ELECT 47MF 20% 50V
C8	S	1-161-063-00	CERAMIC 0.1MF 20% 50V
C9	S	1-124-791-11	ELECT 1MF 20% 50V
C10	S	1-123-875-11	ELECT 10MF 20% 50V
C11	S	1-161-063-00	CERAMIC 0.1MF 20% 50V
C12	S	1-124-791-11	ELECT 1MF 20% 50V
C13	S	1-123-875-11	ELECT 10MF 20% 50V
C14	S	1-161-063-00	CERAMIC 0.1MF 20% 50V
C15	S	1-124-791-11	ELECT 1MF 20% 50V
C16	S	1-123-875-11	ELECT 10MF 20% 50V
CN962	O	1-564-792-11	WAFER ASSY 5P
CN963	O	1-560-260-00	PIN, CONNECTOR 9P (WITH LOCK)
CN999	O	1-560-299-00	POST HEADER (IL CONNECTOR) 2P
D1	S	8-719-160-80	RD27FB1
D3	S	8-719-940-03	1N4004
D4	S	8-719-940-03	1N4004
D5	S	8-719-940-03	1N4004
D6	S	8-719-160-80	RD27FB1
D8	S	8-719-940-03	1N4004
D9	S	8-719-940-03	1N4004
D10	S	8-719-940-03	1N4004
D11	S	8-719-230-04	30D4
D12	S	8-719-940-03	1N4004
D13	S	8-719-940-03	1N4004
D14	S	8-719-940-03	1N4004
D15	S	8-719-230-04	30D4
D16	S	8-719-940-03	1N4004
D17	S	8-719-940-03	1N4004
D18	S	8-719-940-03	1N4004

Ref. No.	SP	SONY Parts No.	Description
F1	S	1-532-782-11	FUSE, MICRO (SECONDARY) 4A
F2	S	1-532-782-11	FUSE, MICRO (SECONDARY) 4A
F3	S	1-532-782-11	FUSE, MICRO (SECONDARY) 4A
F4	S	1-532-782-11	FUSE, MICRO (SECONDARY) 4A
F5	S	1-532-783-11	FUSE, MICRO (SECONDARY) 5A
F6	S	1-532-783-11	FUSE, MICRO (SECONDARY) 5A
Q1	S	8-729-238-32	2SC2383
Q2	S	8-719-108-08	AC03FGM-AY
Q3	S	8-729-385-82	2SB858
Q4	S	8-729-201-89	2SA1265
Q5	S	8-759-604-52	M5F7915
Q6	S	8-729-201-32	2SA1013
Q7	S	8-719-108-08	AC03FGM-AY
Q8	S	8-729-313-32	2SD1133
Q9	S	8-729-201-97	2SC3182
Q10	S	8-759-604-52	M5F7915
Q11	S	8-729-178-54	2SC2785
Q12	S	8-729-201-97	2SC3182
Q13	S	8-759-179-18	uPC7918H
Q14	S	8-729-117-54	2SA1175
Q15	S	8-729-201-89	2SA1265
Q16	S	8-759-701-81	NJM7818FA
R1	S	1-207-641-00	WIREWOUND 0.1 10% 4W
R2	S	1-249-395-11	CARBON 15 5% 1/4W
R3	S	1-249-417-11	CARBON 1K 5% 1/4W
R4	S	1-249-418-11	CARBON 1.2K 5% 1/4W
R5	S	1-249-421-11	CARBON 2.2K 5% 1/4W
R6	S	1-249-413-11	CARBON 470 5% 1/4W
R7	S	1-207-641-00	WIREWOUND 0.1 10% 4W
R8	S	1-249-395-11	CARBON 15 5% 1/4W
R9	S	1-249-417-11	CARBON 1K 5% 1/4W
R10	S	1-249-418-11	CARBON 1.2K 5% 1/4W
R11	S	1-249-421-11	CARBON 2.2K 5% 1/4W
R12	S	1-249-413-11	CARBON 470 5% 1/4W
R13	S	1-207-917-00	WIREWOUND 0.27 10% 4W
R14	S	1-249-393-11	CARBON 10 5% 1/4W
R15	S	1-216-365-00	METAL FILM 0.47 5% 2W
R16	S	1-207-917-00	WIREWOUND 0.27 10% 4W
R17	S	1-249-393-11	CARBON 10 5% 1/4W
R18	S	1-216-365-00	METAL FILM 0.47 5% 2W
R19	S	1-215-916-00	METAL FILM 680 5% 3W
R20	S	1-215-916-00	METAL FILM 680 5% 3W

Ref. No.	SP	SONY Parts No.	Description

RMD BOARD

	O	A-7850-337-A	COMPLETE PCB,RMD (This assembly includes the following parts.)
	O	T-9412-726-1	FUSE CLIP
	O	3-157-917-00	SUPPORT(B), PC BOARD
	O	3-577-229-00	INSULATOR, TO-126
	S	7-682-548-09	SCREW, B3x8
	S	7-682-647-09	SCREW, PSW3x6
	S	7-682-648-09	SCREW, PSW3x8
	S	7-682-650-09	SCREW, PSW3x12
C1	S	1-123-357-00	ELECT 22MF 20% 35V
C2	S	1-123-357-00	ELECT 22MF 20% 35V
C3	S	1-123-357-00	ELECT 22MF 20% 35V
C4	S	1-123-357-00	ELECT 22MF 20% 35V
C5	S	1-124-499-11	ELECT 1MF 20% 50V
C6	S	1-161-473-00	CERAMIC 0.01MF 10% 50V
C7	S	1-161-473-00	CERAMIC 0.01MF 10% 50V
C8	S	1-124-499-11	ELECT 1MF 20% 50V
C9	S	1-161-473-00	CERAMIC 0.01MF 10% 50V
C10	S	1-161-473-00	CERAMIC 0.01MF 10% 50V
C11	S	1-161-485-00	CERAMIC 0.1MF 50V
C12	S	1-161-485-00	CERAMIC 0.1MF 50V
C13	S	1-161-485-00	CERAMIC 0.1MF 50V
C14	S	1-161-485-00	CERAMIC 0.1MF 50V
C15	S	1-161-485-00	CERAMIC 0.1MF 50V
C16	S	1-161-485-00	CERAMIC 0.1MF 50V
C17	S	1-161-485-00	CERAMIC 0.1MF 50V
C18	S	1-161-485-00	CERAMIC 0.1MF 50V
CNJ470	O	1-560-304-00	POST HEADER (IL CONNECTOR)8P
CNJ471	O	1-566-415-11	PIN, CONNECTOR (PC BOARD) 2P
CNJ953	O	1-566-416-11	PIN, CONNECTOR (PC BOARD) 3P
D1	S	8-719-109-85	RD5.1ES-B2
D3	S	8-719-940-03	1N4004
D4	S	8-719-911-19	1SS119
D5	S	8-719-911-19	1SS119
D6	S	8-719-911-19	1SS119
D7	S	8-719-911-19	1SS119
D8	S	8-719-911-19	1SS119
D9	S	8-719-911-19	1SS119
D10	S	8-719-911-19	1SS119
D11	S	8-719-911-19	1SS119

Ref. No.	SP	SONY Parts No.	Description
D12	S	8-719-911-19	1SS119
D13	S	8-719-911-19	1SS119
D14	S	8-719-911-19	1SS119
D15	S	8-719-911-19	1SS119
D16	S	8-719-939-10	MR752
D17	S	8-719-939-10	MR752
D18	S	8-719-109-63	RD3.0ES-B2
D19	S	8-719-109-63	RD3.0ES-B2
F1	S	1-532-508-00	FUSE,GLASS TUBE 8A
F2	S	1-532-508-00	FUSE,GLASS TUBE 8A
IC1	S	8-719-901-03	PC525
IC2	S	8-759-910-83	TL072ACP
IC3	S	8-759-990-04	TL074CN
IC4	S	8-759-990-04	TL074CN
IC5	S	8-759-604-34	M5F7815
IC6	S	8-759-604-52	M5F7915
K1	S	1-515-670-11	RELAY,P.C. MOUNT
Q1	S	8-729-139-04	2N3904
Q2	S	8-729-306-92	2SD669A
Q3	S	8-729-300-24	2SA1170
Q4	S	8-729-304-92	2SB649A
Q5	S	8-729-300-18	2SC2774
Q6	S	8-729-306-92	2SD669A
Q7	S	8-729-300-24	2SA1170
Q8	S	8-729-304-92	2SB649A
Q9	S	8-729-300-18	2SC2774
R1	S	1-247-688-11	CARBON 10 5% 1/4W
R2	S	1-249-421-11	CARBON 2.2K 5% 1/4W
R3	S	1-247-688-11	CARBON 10 5% 1/4W
R4	S	1-249-429-11	CARBON 10K 5% 1/4W
R5	S	1-249-417-11	CARBON 1K 5% 1/4W
R6	S	1-214-581-00	METAL FILM 10K 1% 1/8W
R7	S	1-214-581-00	METAL FILM 10K 1% 1/8W
R8	S	1-214-581-00	METAL FILM 10K 1% 1/8W
R9	S	1-214-581-00	METAL FILM 10K 1% 1/8W
R10	S	1-247-836-11	CARBON 1.6K 5% 1/4W
R11	S	1-249-421-11	CARBON 2.2K 5% 1/4W
R12	S	1-249-429-11	CARBON 10K 5% 1/4W
R13	S	1-249-429-11	CARBON 10K 5% 1/4W
R14	S	1-249-429-11	CARBON 10K 5% 1/4W
R15	S	1-249-429-11	CARBON 10K 5% 1/4W
R16	S	1-249-429-11	CARBON 10K 5% 1/4W
R17	S	1-249-429-11	CARBON 10K 5% 1/4W
R18	S	1-249-401-11	CARBON 47 5% 1/4W
R19	S	1-247-688-11	CARBON 10 5% 1/4W
R20	S	1-247-688-11	CARBON 10 5% 1/4W

Ref. No.	SP	SONY Parts No.	Description
R21	S	1-249-401-11	CARBON 47 5% 1/4W
R22	S	1-207-612-00	RES,WIRE 0.1 10% 3W
R23	S	1-214-557-00	METAL FILM 1K 1% 1/8W
R24	S	1-214-581-00	METAL FILM 10K 1% 1/8W
R25	S	1-214-557-00	METAL FILM 1K 1% 1/8W
R26	S	1-214-581-00	METAL FILM 10K 1% 1/8W
R27	S	1-249-429-11	CARBON 10K 5% 1/4W
R28	S	1-247-903-00	CARBON 1M 5% 1/4W
R29	S	1-249-441-11	CARBON 100K 5% 1/4W
R30	S	1-214-581-00	METAL FILM 10K 1% 1/8W
R31	S	1-214-581-00	METAL FILM 10K 1% 1/8W
R32	S	1-214-581-00	METAL FILM 10K 1% 1/8W
R33	S	1-214-581-00	METAL FILM 10K 1% 1/8W
R34	S	1-247-836-11	CARBON 1.6K 5% 1/4W
R35	S	1-249-421-11	CARBON 2.2K 5% 1/4W
R36	S	1-249-429-11	CARBON 10K 5% 1/4W
R37	S	1-249-429-11	CARBON 10K 5% 1/4W
R38	S	1-249-429-11	CARBON 10K 5% 1/4W
R39	S	1-249-429-11	CARBON 10K 5% 1/4W
R40	S	1-249-429-11	CARBON 10K 5% 1/4W
R41	S	1-249-429-11	CARBON 10K 5% 1/4W
R42	S	1-249-401-11	CARBON 47 5% 1/4W
R43	S	1-247-688-11	CARBON 10 5% 1/4W
R44	S	1-247-688-11	CARBON 10 5% 1/4W
R45	S	1-249-401-11	CARBON 47 5% 1/4W
R46	S	1-207-612-00	RES,WIRE 0.1 10% 3W
R47	S	1-214-557-00	METAL FILM 1K 1% 1/8W
R48	S	1-214-581-00	METAL FILM 10K 1% 1/8W
R49	S	1-214-557-00	METAL FILM 1K 1% 1/8W
R50	S	1-214-581-00	METAL FILM 10K 1% 1/8W
R51	S	1-249-429-11	CARBON 10K 5% 1/4W
R52	S	1-247-903-00	CARBON 1M 5% 1/4W
R53	S	1-249-441-11	CARBON 100K 5% 1/4W
RV1	S	1-237-517-21	ADJ,METAL FILM 5K
RV2	S	1-237-521-21	ADJ,METAL FILM 100K
RV3	S	1-237-517-21	ADJ,METAL FILM 5K
RV4	S	1-237-521-21	ADJ,METAL FILM 100K

Ref. No.	SP	SONY Parts No.	Description
RTS-1 BOARD			
	O	A-7850-349-A	MOUNTED PCB,RTS-1 (This assembly includes the following parts.)
C1	S	1-126-096-11	ELECT 10MF 20% 25V
C2	S	1-126-096-11	ELECT 10MF 20% 25V
C3	S	1-126-096-11	ELECT 10MF 20% 25V
C6	S	1-162-710-11	CERAMIC 100PF 5% 50V
C7	S	1-162-710-11	CERAMIC 100PF 5% 50V
C8	S	1-161-485-00	CERAMIC 0.1MF 50V
C9	S	1-161-485-00	CERAMIC 0.1MF 50V
CNJ403	O	1-560-311-00	POST HEADER (IL CONNECTOR) 5P
D1	S	8-719-110-22	RD11ES-B2
D2	S	8-719-109-85	RD5.1ES-B2
D3	S	8-719-109-85	RD5.1ES-B2
IC1	S	8-745-211-00	DM-211
IC2	S	8-759-990-04	TL074CN
R1	S	1-249-393-11	CARBON 10 5% 1/4W
R2	S	1-249-393-11	CARBON 10 5% 1/4W
R3	S	1-247-711-11	CARBON 680 5% 1/4W
R4	S	1-247-711-11	CARBON 680 5% 1/4W
R5	S	1-249-433-11	CARBON 22K 5% 1/4W
R6	S	1-249-433-11	CARBON 22K 5% 1/4W
R7	S	1-249-433-11	CARBON 22K 5% 1/4W
R8	S	1-249-433-11	CARBON 22K 5% 1/4W
R9	S	1-249-421-11	CARBON 2.2K 5% 1/4W
R10	S	1-249-421-11	CARBON 2.2K 5% 1/4W
R11	S	1-247-887-00	CARBON 220K 5% 1/4W
R12	S	1-247-887-00	CARBON 220K 5% 1/4W
R13	S	1-249-421-11	CARBON 2.2K 5% 1/4W
R14	S	1-249-421-11	CARBON 2.2K 5% 1/4W
RV1	S	1-237-501-21	ADJ,METAL FILM 2K
RV2	S	1-237-501-21	ADJ,METAL FILM 2K

Ref. No.	SP	SONY Parts No.	Description
TCC BOARD (For APR-5003A)			
	O	A-7850-378-A	COMPLETE PCB,TCC (This assembly includes the following parts.)
	S	T-9412-185-1	FERRITE BEAD
C1	S	1-123-333-00	ELECT 100MF 20% 25V
C2	S	1-123-333-00	ELECT 100MF 20% 25V
C3	S	1-123-333-00	ELECT 100MF 20% 25V
C4	S	1-123-333-00	ELECT 100MF 20% 25V
C5	S	1-123-333-00	ELECT 100MF 20% 25V
C6	S	1-162-726-11	CERAMIC 470PF 5% 50V
C10	S	1-162-668-11	CERAMIC 12PF 5% 50V
C11	S	1-124-631-11	ELECT 47MF 20% 16V
C18	S	1-161-473-00	CERAMIC 0.01MF 10% 50V
C19	S	1-162-673-11	CERAMIC 33PF 5% 50V
C20	S	1-130-777-00	POLYESTER FILM 0.1MF 5% 100V
C21	S	1-162-720-11	CERAMIC 270PF 5% 50V
C23	S	1-162-724-11	CERAMIC 390PF 5% 50V
C24	S	1-162-730-11	CERAMIC 680PF 5% 50V
C25	S	1-162-736-11	CERAMIC 1500PF 10% 50V
C26	S	1-124-429-00	ELECT 0.68MF 20% 50V
C27	S	1-162-710-11	CERAMIC 100PF 5% 50V
C28	S	1-162-668-11	CERAMIC 12PF 5% 50V
C29	S	1-126-235-11	ELECT 100MF 20% 16V
C30	S	1-126-235-11	ELECT 100MF 20% 16V
C31	S	1-126-235-11	ELECT 100MF 20% 16V
C32	S	1-162-716-11	CERAMIC 180PF 5% 50V
C35	S	1-162-877-11	CERAMIC 82PF 5% 50V
C36	S	1-162-673-11	CERAMIC 33PF 5% 50V
C37	S	1-162-724-11	CERAMIC 390PF 5% 50V
C38	S	1-162-671-11	CERAMIC 22PF 5% 50V
C39	S	1-126-235-11	ELECT 100MF 20% 16V
C40	S	1-162-668-11	CERAMIC 12PF 5% 50V
C41	S	1-162-732-11	CERAMIC 820PF 5% 50V
C42	S	1-162-875-11	CERAMIC 68PF 5% 50V
C43	S	1-162-671-11	CERAMIC 22PF 5% 50V
C44	S	1-162-893-11	CERAMIC 2200PF 10% 50V
C45	S	1-162-734-11	CERAMIC 0.001MF 10% 50V
C46	S	1-162-726-11	CERAMIC 470PF 5% 50V
C48	S	1-162-671-11	CERAMIC 22PF 5% 50V

Ref. No.	SP	SONY Parts No.	Description			
C49	S	1-162-871-11	CERAMIC	47PF	5%	50V
C50	S	1-162-666-11	CERAMIC	0.027MF	10%	50V
C51	S	1-162-671-11	CERAMIC	22PF	5%	50V
C52	S	1-162-718-11	CERAMIC	220PF	5%	50V
C53	S	1-162-710-11	CERAMIC	100PF	5%	50V
C54	S	1-162-871-11	CERAMIC	47PF	5%	50V
C55	S	1-161-473-00	CERAMIC	0.01MF	10%	50V
C56	S	1-161-473-00	CERAMIC	0.01MF	10%	50V
C57	S	1-126-162-11	ELECT	3.3MF	20%	50V
C58	S	1-161-473-00	CERAMIC	0.01MF	10%	50V
C59	S	1-161-473-00	CERAMIC	0.01MF	10%	50V
C60	S	1-126-162-11	ELECT	3.3MF	20%	50V
C62	S	1-161-485-00	CERAMIC	0.1MF		50V
C63	S	1-123-357-00	ELECT	22MF	20%	35V
C64	S	1-123-357-00	ELECT	22MF	20%	35V
C65	S	1-123-357-00	ELECT	22MF	20%	35V
C66	S	1-123-357-00	ELECT	22MF	20%	35V
C67	S	1-124-006-11	ELECT	10MF	20%	25V
C68	S	1-124-499-11	ELECT	1MF	20%	50V
C69	S	1-162-714-11	CERAMIC	150PF	5%	50V
C70	S	1-162-673-11	CERAMIC	33PF	5%	50V
C71	S	1-162-800-11	CERAMIC	0.033MF	10%	50V
C72	S	1-162-800-11	CERAMIC	0.033MF	10%	50V
C73	S	1-161-473-00	CERAMIC	0.01MF	10%	50V
C74	S	1-161-473-00	CERAMIC	0.01MF	10%	50V
C75	S	1-123-357-00	ELECT	22MF	20%	35V
C76	S	1-123-357-00	ELECT	22MF	20%	35V
C80	S	1-161-485-00	CERAMIC	0.1MF		50V
C81	S	1-161-485-00	CERAMIC	0.1MF		50V
C82	S	1-123-357-00	ELECT	22MF	20%	35V
C83	S	1-123-357-00	ELECT	22MF	20%	35V
C90	S	1-123-357-00	ELECT	22MF	20%	35V
C91	S	1-123-357-00	ELECT	22MF	20%	35V
C92	S	1-123-357-00	ELECT	22MF	20%	35V
C93	S	1-123-357-00	ELECT	22MF	20%	35V
C94	S	1-123-357-00	ELECT	22MF	20%	35V
C95	S	1-123-357-00	ELECT	22MF	20%	35V
C96	S	1-162-839-11	CERAMIC	0.01MF	10%	16V
C97	S	1-123-357-00	ELECT	22MF	20%	35V
C98	S	1-123-357-00	ELECT	22MF	20%	35V
C105	S	1-162-839-11	CERAMIC	0.01MF	10%	16V
C109	S	1-162-893-11	CERAMIC	2200PF	10%	50V
C110	S	1-123-357-00	ELECT	22MF	20%	35V
C111	S	1-123-357-00	ELECT	22MF	20%	35V
C112	S	1-123-357-00	ELECT	22MF	20%	35V

Ref. No.	SP	SONY Parts No.	Description			
C113	S	1-123-357-00	ELECT	22MF	20%	35V
C114	S	1-162-839-11	CERAMIC	0.01MF	10%	16V
C115	S	1-123-357-00	ELECT	22MF	20%	35V
C116	S	1-123-357-00	ELECT	22MF	20%	35V
C120	S	1-123-357-00	ELECT	22MF	20%	35V
C121	S	1-123-357-00	ELECT	22MF	20%	35V
C125	S	1-162-839-11	CERAMIC	0.01MF	10%	16V
C126	S	1-162-839-11	CERAMIC	0.01MF	10%	16V
C127	S	1-162-839-11	CERAMIC	0.01MF	10%	16V
C128	S	1-162-839-11	CERAMIC	0.01MF	10%	16V
C129	S	1-162-839-11	CERAMIC	0.01MF	10%	16V
C130	S	1-162-839-11	CERAMIC	0.01MF	10%	16V
C131	S	1-162-839-11	CERAMIC	0.01MF	10%	16V
C132	S	1-162-839-11	CERAMIC	0.01MF	10%	16V
C133	S	1-162-839-11	CERAMIC	0.01MF	10%	16V
C134	S	1-162-839-11	CERAMIC	0.01MF	10%	16V
C135	S	1-162-839-11	CERAMIC	0.01MF	10%	16V
C136	S	1-162-839-11	CERAMIC	0.01MF	10%	16V
C137	S	1-162-839-11	CERAMIC	0.01MF	10%	16V
C138	S	1-162-839-11	CERAMIC	0.01MF	10%	16V
C139	S	1-162-839-11	CERAMIC	0.01MF	10%	16V
C140	S	1-123-357-00	ELECT	22MF	20%	35V
C141	S	1-123-357-00	ELECT	22MF	20%	35V
C142	S	1-124-438-00	ELECT	1MF	20%	50V
C143	S	1-124-438-00	ELECT	1MF	20%	50V
C144	S	1-162-839-11	CERAMIC	0.01MF	10%	16V
C147	S	1-162-788-11	CERAMIC	3300PF	10%	50V
C148	S	1-162-732-11	CERAMIC	820PF	5%	50V
C149	S	1-162-667-11	CERAMIC	10PF	5%	50V
C150	S	1-162-670-11	CERAMIC	18PF	5%	50V
C151	S	1-162-663-11	CERAMIC	1200PF	10%	50V
C152	S	1-123-357-00	ELECT	22MF	20%	35V
C153	S	1-123-357-00	ELECT	22MF	20%	35V
C157	S	1-123-357-00	ELECT	22MF	20%	35V
C158	S	1-123-357-00	ELECT	22MF	20%	35V
C159	S	1-123-357-00	ELECT	22MF	20%	35V
C160	S	1-123-357-00	ELECT	22MF	20%	35V
C161	S	1-123-163-11	ELECT	4.7MF	20%	50V
C162	S	1-162-726-11	CERAMIC	470PF	5%	50V
C163	S	1-162-671-11	CERAMIC	22PF	5%	50V
C164	S	1-162-671-11	CERAMIC	22PF	5%	50V
C165	S	1-162-671-11	CERAMIC	22PF	5%	50V
C166	S	1-162-674-11	CERAMIC	39PF	5%	50V
C167	S	1-162-710-11	CERAMIC	100PF	5%	50V
C168	S	1-162-664-11	CERAMIC	1800PF	10%	50V

Ref. No.	SP	SONY Parts No.	Description
C169	S	1-123-357-00	ELECT 22MF 20% 35V
C170	S	1-123-357-00	ELECT 22MF 20% 35V
C171	S	1-124-438-00	ELECT 1MF 20% 50V
C172	S	1-161-473-00	CERAMIC 0.01MF 10% 50V
C173	S	1-123-357-00	ELECT 22MF 20% 35V
C174	S	1-123-357-00	ELECT 22MF 20% 35V
D1	S	8-719-911-19	1SS119
D2	S	8-719-911-19	1SS119
D3	S	8-719-911-19	1SS119
D4	S	8-719-911-19	1SS119
D5	S	8-719-911-19	1SS119
D6	S	8-719-911-19	1SS119
D7	S	8-719-911-19	1SS119
D9	S	8-719-911-19	1SS119
D10	S	8-719-911-19	1SS119
D11	S	8-719-200-90	11DF1
D12	S	8-719-200-90	11DF1
D13	S	8-719-911-19	1SS119
D14	S	8-719-911-19	1SS119
D15	S	8-719-200-90	11DF1
D16	S	8-719-200-90	11DF1
D17	S	8-719-911-19	1SS119
D18	S	8-719-911-19	1SS119
D19	S	8-719-911-19	1SS119
D20	S	8-719-911-19	1SS119
D21	S	T-9410-333-1	1N34
D22	S	8-719-911-19	1SS119
D23	S	8-719-911-19	1SS119
D24	S	8-719-911-19	1SS119
D25	S	8-719-109-83	RD5.1ES-B2
D26	S	8-719-911-19	1SS119
IC1	S	8-759-905-34	NE5534AN
IC2	S	8-759-905-34	NE5534AN
IC3	S	8-759-900-72	NE5532P
IC4	S	8-759-937-40	DG212CJ
IC5	S	8-759-937-20	AD7528AQ
IC6	S	8-741-135-20	BX1352
IC7	S	8-759-910-83	TL072ACP
IC8	S	8-759-910-83	TL072ACP
IC9	S	8-759-910-83	TL072ACP
IC10	S	8-759-905-34	NE5534AN
IC11	S	8-741-135-30	BX1353
IC13	S	8-759-937-40	DG212CJ
IC14	S	8-759-937-40	DG212CJ
IC15	S	8-759-910-83	TL072ACP
IC16	S	8-759-937-40	DG212CJ

Ref. No.	SP	SONY Parts No.	Description
IC17	S	8-759-937-20	AD7528AQ
IC18	S	8-759-905-34	NE5534AN
IC19	S	8-759-937-40	DG212CJ
IC21	S	8-759-937-20	AD7528AQ
IC22	S	8-759-903-16	LM318P
IC23	S	8-759-937-40	DG212CJ
IC24	S	8-759-903-16	LM318P
IC25	S	8-759-903-16	LM318P
IC26	S	8-759-937-26	LM13006N
IC27	S	8-759-910-83	TL072ACP
IC28	S	8-759-202-55	TC74HC244P
IC29	S	8-759-203-48	TC74HC573P
IC30	S	8-759-203-48	TC74HC573P
IC31	S	8-759-203-48	TC74HC573P
IC32	S	8-759-202-14	TC74HC08P
IC33	S	8-759-202-21	TC74HC32P
IC34	S	8-759-202-21	TC74HC32P
IC35	S	8-759-202-12	TC74HC02P
IC36	S	8-759-245-16	TC4516BP
IC37	S	8-759-245-16	TC4516BP
IC38	S	8-759-340-13	HD14013BP
IC39	S	8-759-340-13	HD14013BP
IC40	S	8-759-140-69	uPD4069UBC
IC41	S	8-759-140-01	uPD4001BC
IC42	S	8-759-140-81	uPD4081BC
IC47	S	8-759-202-21	TC74HC32P
IC48	S	8-759-907-01	TL071CP
JW5	S	1-566-388-11	PIN, SHORT
K2	S	1-515-716-11	RELAY,DPDT 5V
L1	S	1-408-092-00	INDUCTOR,MICRO 330MH 5%
L2	S	1-409-339-00	COIL,SN
L3	S	1-408-092-00	INDUCTOR,MICRO 330MH 5%
Q1	S	T-9410-286-1	SP7000-0127-01
Q2	S	8-729-313-32	2SD1133
Q3	S	8-729-385-72	2SB857C
Q4	S	8-729-313-32	2SD1133
Q5	S	8-729-385-72	2SB857C
Q6	S	8-729-904-15	VN10KM
Q7	S	8-759-937-24	LM394H
Q8	S	T-9410-286-1	SP7000-0127-01
Q9	S	8-729-904-18	P1086
		(APR-5002: Up to NO. 20300)	

Ref. No.	SP	SONY Parts No.	Description
R2	S	1-214-533-00	METAL FILM 100 1% 1/8W
R3	S	1-214-533-00	METAL FILM 100 1% 1/8W
R4	S	1-214-533-00	METAL FILM 100 1% 1/8W
R5	S	1-214-557-00	METAL FILM 1K 1% 1/8W
R6	S	1-247-887-00	CARBON 220K 5% 1/4W
R11	S	1-214-745-00	METAL FILM 4.7K 1% 1/4W
R12	S	1-214-769-00	METAL FILM 47K 1% 1/4W
R23	S	1-214-773-00	METAL FILM 68K 1% 1/4W
R24	S	1-214-557-00	METAL FILM 1K 1% 1/8W
R25	S	1-247-888-00	CARBON 240K 5% 1/4W
R26	S	1-214-549-00	METAL FILM 470 1% 1/8W
R27	S	1-214-533-00	METAL FILM 100 1% 1/8W
R28	S	1-247-887-00	CARBON 220K 5% 1/4W
R30	S	1-214-748-00	METAL FILM 6.2K 1% 1/4W
R31	S	1-214-581-00	METAL FILM 10K 1% 1/8W
R32	S	1-214-574-00	METAL FILM 5.1K 1% 1/8W
R33	S	1-214-581-00	METAL FILM 10K 1% 1/8W
R35	S	1-218-197-11	METAL FILM 2.43K1% 1/8W
R36	S	1-214-757-00	METAL FILM 15K 1% 1/4W
R37	S	1-214-564-00	METAL FILM 2K 1% 1/8W
R38	S	1-214-564-00	METAL FILM 2K 1% 1/8W
R39	S	1-214-573-00	METAL FILM 4.7K 1% 1/8W
R42	S	1-214-533-00	METAL FILM 100 1% 1/8W
R45	S	1-215-826-11	METAL FIlM 68K 1% 1/8W
R46	S	1-215-826-11	METAL FIlM 68K 1% 1/8W
R47	S	1-218-194-11	METAL FILM 1.62K1% 1/8W
R48	S	1-214-757-00	METAL FILM 15K 1% 1/4W
R49	S	1-218-201-11	METAL FILM 4.12K1% 1/8W
R50	S	1-218-221-11	METAL FILM 40.2K1% 1/8W
R51	S	1-214-760-00	METAL FILM 20K 1% 1/4W
R52	S	1-214-760-00	METAL FILM 20K 1% 1/4W
R53	S	1-214-753-00	METAL FILM 10K 1% 1/4W
R54	S	1-218-213-11	METAL FILM 21K 1% 1/8W
R56	S	1-218-220-11	METAL FILM 39.2K1% 1/8W
R57	S	1-214-760-00	METAL FILM 20K 1% 1/4W
R58	S	1-214-749-00	METAL FILM 6.8K 1% 1/4W
R59	S	1-214-549-00	METAL FILM 470 1% 1/8W
R60	S	1-214-760-00	METAL FILM 20K 1% 1/4W
R61	S	1-214-760-00	METAL FILM 20K 1% 1/4W
R63	S	1-218-200-11	METAL FILM 3.74K1% 1/8W
R64	S	1-218-194-11	METAL FILM 1.62K1% 1/8W
R65	S	1-214-743-00	METAL FILM 3.9K 1% 1/4W
R66	S	1-214-557-00	METAL FILM 1K 1% 1/8W
R67	S	1-247-888-11	CARBON 240K 5% 1/4W
R68	S	1-214-572-00	METAL FILM 4.3K 1% 1/8W

Ref. No.	SP	SONY Parts No.	Description
R69	S	1-215-830-11	METAL FILM 100K 1% 1/8W
R70	S	1-214-573-00	METAL FILM 4.7K 1% 1/8W
R71	S	1-214-574-00	METAL FILM 5.1K 1% 1/8W
R73	S	1-214-557-00	METAL FILM 1K 1% 1/8W
R74	S	1-247-888-11	CARBON 240K 5% 1/4W
R75	S	1-218-223-11	METAL FILM 36K 1% 1/4W
R76	S	1-214-557-00	METAL FILM 1K 1% 1/8W
R77	S	1-214-772-00	METAL FILM 62K 1% 1/4W
R78	S	1-214-557-00	METAL FILM 1K 1% 1/8W
R79	S	1-214-573-00	METAL FILM 4.7K 1% 1/8W
R80	S	1-247-893-11	CARBON 390K 5% 1/4W
R81	S	1-215-827-11	METAL FILM 75K 1% 1/8W
R82	S	1-214-739-00	METAL FILM 2.7K 1% 1/4W
R83	S	1-249-441-11	CARBON 100K 5% 1/4W
R84	S	1-214-533-00	METAL FILM 100 1% 1/8W
R85	S	1-247-889-00	CARBON 270K 5% 1/4W
R86	S	1-214-773-00	METAL FILM 68K 1% 1/4W
R87	S	1-214-581-00	METAL FILM 10K 1% 1/8W
R88	S	1-214-753-00	METAL FILM 10K 1% 1/4W
R89	S	1-214-753-00	METAL FILM 10K 1% 1/4W
R90	S	1-214-746-00	METAL FILM 5.1K 1% 1/4W
R91	S	1-214-753-00	METAL FILM 10K 1% 1/4W
R92	S	1-214-746-00	METAL FILM 5.1K 1% 1/4W
R93	S	1-214-753-00	METAL FILM 10K 1% 1/4W
R94	S	1-214-746-00	METAL FILM 5.1K 1% 1/4W
R95	S	1-214-746-00	METAL FILM 5.1K 1% 1/4W
R96	S	1-214-578-00	METAL FIML 7.5K 1% 1/8W
R97	S	1-214-578-00	METAL FIML 7.5K 1% 1/8W
R98	S	1-214-753-00	METAL FILM 10K 1% 1/4W
R99	S	1-214-753-00	METAL FILM 10K 1% 1/4W
R100	S	1-214-746-00	METAL FILM 5.1K 1% 1/4W
R101	S	1-214-753-00	METAL FILM 10K 1% 1/4W
R102	S	1-214-746-00	METAL FILM 5.1K 1% 1/4W
R103	S	1-214-753-00	METAL FILM 10K 1% 1/4W
R104	S	1-214-746-00	METAL FILM 5.1K 1% 1/4W
R105	S	1-214-746-00	METAL FILM 5.1K 1% 1/4W
R106	S	1-214-578-00	METAL FIML 7.5K 1% 1/8W
R107	S	1-214-578-00	METAL FIML 7.5K 1% 1/8W
R108	S	1-214-563-00	METAL FILM 1.8K 1% 1/8W
R109	S	1-214-567-00	METAL FILM 2.7K 1% 1/8W
R110	S	1-214-563-00	METAL FILM 1.8K 1% 1/8W
R111	S	1-214-567-00	METAL FILM 2.7K 1% 1/8W
R112	S	1-214-719-00	METAL FILM 390 1% 1/4W
R113	S	1-214-584-00	METAL FILM 13K 1% 1/8W
R114	S	1-214-719-00	METAL FILM 390 1% 1/4W

Ref. No.	SP	SONY Parts No.	Description
R115	S	1-214-585-00	METAL FILM 15K 1% 1/8W
R116	S	1-214-719-00	METAL FILM 390 1% 1/4W
R117	S	1-214-584-00	METAL FILM 13K 1% 1/8W
R118	S	1-214-719-00	METAL FILM 390 1% 1/4W
R119	S	1-214-585-00	METAL FILM 15K 1% 1/8W
R120	S	1-214-581-00	METAL FILM 10K 1% 1/8W
R121	S	1-214-565-00	METAL FILM 2.2K 1% 1/8W
R122	S	1-214-581-00	METAL FILM 10K 1% 1/8W
R123	S	1-214-574-00	METAL FILM 5.1K 1% 1/8W
R124	S	1-214-581-00	METAL FILM 10K 1% 1/8W
R125	S	1-214-565-00	METAL FILM 2.2K 1% 1/8W
R126	S	1-214-581-00	METAL FILM 10K 1% 1/8W
R127	S	1-214-574-00	METAL FILM 5.1K 1% 1/8W
R128	S	1-214-581-00	METAL FILM 10K 1% 1/8W
R129	S	1-214-574-00	METAL FILM 5.1K 1% 1/8W
R130	S	1-214-533-00	METAL FILM 100 1% 1/8W
R131	S	1-215-822-11	METAL FILM 47K 1% 1/8W
R132	S	1-214-533-00	METAL FILM 100 1% 1/8W
R133	S	1-218-203-11	METAL FILM 5.9K 1% 1/8W
R134	S	1-214-573-00	METAL FILM 4.7K 1% 1/8W
R135	S	1-214-588-00	METAL FILM 20K 1% 1/8W
R136	S	1-214-542-00	METAL FILM 240 1% 1/8W
R137	S	1-214-573-00	METAL FILM 4.7K 1% 1/8W
R138	S	1-214-573-00	METAL FILM 4.7K 1% 1/8W
R139	S	1-214-574-00	METAL FILM 5.1K 1% 1/8W
R140	S	1-215-822-11	METAL FILM 47K 1% 1/8W
R141	S	1-214-573-00	METAL FILM 4.7K 1% 1/8W
R142	S	1-206-456-00	CARBON 5.1 5% 1/2W
R143	S	1-206-456-00	CARBON 5.1 5% 1/2W
R144	S	1-206-456-00	CARBON 5.1 5% 1/2W
R145	S	1-206-456-00	CARBON 5.1 5% 1/2W
R146	S	1-215-822-11	METAL FILM 47K 1% 1/8W
R147	S	1-215-822-11	METAL FILM 47K 1% 1/8W
R148	S	1-215-822-11	METAL FILM 47K 1% 1/8W
R149	S	1-215-822-11	METAL FILM 47K 1% 1/8W
R150	S	1-214-585-00	METAL FILM 15K 1% 1/8W
R151	S	1-214-574-00	METAL FILM 5.1K 1% 1/8W
R152	S	1-214-574-00	METAL FILM 5.1K 1% 1/8W
R153	S	1-218-216-11	METAL FILM 28K 1% 1/8W
R154	S	1-214-738-00	METAL FILM 2.4K 1% 1/4W
R157 } R158	S	1-214-757-00	METAL FILM 15K PAIR
R159 } R160	S	1-216-786-11	METAL FILM 180 PAIR
R161	S	1-214-743-00	METAL FILM 3.9K 1% 1/4W

Ref. No.	SP	SONY Parts No.	Description
R162 R163	S	1-216-787-11	METAL FILM 5.1K PAIR
R164 R165	S	1-216-787-11	METAL FILM 5.1K PAIR
R166	S	1-214-589-00	METAL FILM 22K 1% 1/8W
R171	S	1-215-826-11	METAL FILM 68K 1% 1/8W
R172	S	1-214-738-00	METAL FILM 2.4K 1% 1/4W
R173	S	1-214-581-00	METAL FILM 10K 1% 1/8W
R174	S	1-214-570-00	METAL FILM 3.6K 1% 1/8W
R175	S	1-214-574-00	METAL FILM 5.1K 1% 1/8W
R176	S	1-214-574-00	METAL FILM 5.1K 1% 1/8W
R177	S	1-214-573-00	METAL FILM 4.7K 1% 1/8W
R178	S	1-218-213-11	METAL FILM 21K 1% 1/8W
R179	S	1-218-228-11	METAL FILM 140K 1% 1/8W
R180	S	1-214-564-00	METAL FILM 2K 1% 1/8W
R181	S	1-214-581-00	METAL FILM 10K 1% 1/8W
R182	S	1-214-581-00	METAL FILM 10K 1% 1/8W
R183	S	1-215-830-11	METAL FILM 100K 1% 1/8W
R184	S	1-215-830-11	METAL FILM 100K 1% 1/8W
RV1	S	1-237-521-21	ADJ,METAL FILM 100K
RV2	S	1-237-514-21	ADJ,METAL FILM 500
RV3	S	1-237-518-21	ADJ,METAL FILM 10K
RV4	S	1-230-838-11	ADJ,METAL FILM 200
RV5	S	1-230-838-11	ADJ,METAL FILM 200

Ref. No.	SP	SONY Parts No.	Description
TCM BOARD (For APR-5003V)			
	O	A-7850-372-A	MOUNTED PCB,TCM
			(This assembly includes the following parts.)
	O	T-9412-217-1	SOCKET,LAMP 25-212
	O	1-937-553-11	HARNESS(METER CONTROL)
	O	1-937-554-12	HARNESS(METER INPUT)
C1	S	1-161-473-00	CERAMIC 0.01MF 10% 50V
C7	S	1-161-473-00	CERAMIC 0.01MF 10% 50V
D6	S	8-719-911-19	1SS119
D7	S	8-719-911-19	1SS119
D13	S	8-719-911-19	1SS119
D14	S	8-719-404-08	LN48YP
D15	S	8-719-404-06	LN28RP
D16	S	8-719-404-06	LN28RP
IC1	S	8-759-202-14	TC74HC08P
IC2	S	8-759-202-14	TC74HC08P
Q1	S	8-729-113-08	2N3906
Q2	S	8-729-113-08	2N3906
Q3	S	8-729-904-15	VN10KM
Q9	S	8-729-904-15	VN10KM
R1	S	1-214-575-00	METAL FILM 5.6K 1% 1/8W
R2	S	1-214-575-00	METAL FILM 5.6K 1% 1/8W
R3	S	1-214-539-00	METAL FILM 180 1% 1/8W
R4	S	1-214-539-00	METAL FILM 180 1% 1/8W
R5	S	1-247-886-11	CARBON 200K 5% 1/4W
R11	S	1-247-886-11	CARBON 200K 5% 1/4W
R12	S	1-214-531-00	METAL FILM 82 1% 1/8W
R18	S	1-214-531-00	METAL FILM 82 1% 1/8W
S3	S	1-554-750-31	SWITCH,KEY BOARD (WITH LED)

Ref. No.	SP	SONY Parts No.	Description
TIB BOARD			
	O	A-7850-362-A	COMPLETE PCB,TIB (This assembly includes the following parts.)
	S	1-561-832-00	SOCKET,SHORT
C1	S	1-161-473-00	CERAMIC 0.01MF 10% 50V
C2	S	1-162-714-11	CERAMIC 150PF 5% 50V
C3	S	1-162-673-11	CERAMIC 33PF 5% 50V
C5	S	1-161-473-00	CERAMIC 0.01MF 10% 50V
C6	S	1-161-473-00	CERAMIC 0.01MF 10% 50V
C7	S	1-161-473-00	CERAMIC 0.01MF 10% 50V
C8	S	1-161-473-00	CERAMIC 0.01MF 10% 50V
C9	S	1-161-485-00	CERAMIC 0.1MF 50V
C10	S	1-161-485-00	CERAMIC 0.1MF 50V
C11	S	1-130-477-00	PE TEREPHTHALATE 0.0033MF 5% 50V
C12	S	1-162-765-11	CERAMIC 0.001MF 5% 50V
C13	S	1-124-499-11	ELECT 1MF 20% 50V
C14	S	1-162-871-11	CERAMIC 47PF 5% 50V
C15	S	1-162-726-11	CERAMIC 470PF 5% 50V
C16	S	1-124-499-11	ELECT 1MF 20% 50V
C17	S	1-161-485-00	CERAMIC 0.1MF 50V
C18	S	1-161-485-00	CERAMIC 0.1MF 50V
C19	S	1-161-485-00	CERAMIC 0.1MF 50V
C20	S	1-161-485-00	CERAMIC 0.1MF 50V
C21	S	1-124-584-00	ELECT 100MF 20% 10V
C22	S	1-123-357-00	ELECT 22MF 10% 35V
C23	S	1-123-357-00	ELECT 22MF 10% 35V
C24	S	1-123-357-00	ELECT 22MF 10% 35V
C25	S	1-161-485-00	CERAMIC 0.1MF 50V
C26	S	1-161-485-00	CERAMIC 0.1MF 50V
C27	S	1-161-485-00	CERAMIC 0.1MF 50V
C28	S	1-161-485-00	CERAMIC 0.1MF 50V
C29	S	1-161-485-00	CERAMIC 0.1MF 50V
C30	S	1-161-485-00	CERAMIC 0.1MF 50V
C31	S	1-161-485-00	CERAMIC 0.1MF 50V
C32	S	1-161-485-00	CERAMIC 0.1MF 50V
C33	S	1-161-485-00	CERAMIC 0.1MF 50V
C34	S	1-161-485-00	CERAMIC 0.1MF 50V
C35	S	1-161-485-00	CERAMIC 0.1MF 50V
C36	S	1-161-485-00	CERAMIC 0.1MF 50V

Ref. No.	SP	SONY Parts No.	Description	
C37	S	1-161-485-00	CERAMIC 0.1MF	50V
C38	S	1-161-485-00	CERAMIC 0.1MF	50V
C39	S	1-161-485-00	CERAMIC 0.1MF	50V
C40	S	1-161-485-00	CERAMIC 0.1MF	50V
CNJ400	O	1-564-699-21	RIBBON CABLE 34P	
CNJ402	O	1-560-301-00	POST HEADER 4P	
CNJ405	O	1-560-304-00	POST HEADER 8P	
CNJ407	O	1-560-302-00	POST HEADER 5P	
CNJ408	O	1-560-300-00	POST HEADER 3P	
CNJ409	O	1-560-300-00	POST HEADER 3P	
CNJ410	O	1-560-300-00	POST HEADER 3P	
CNJ411	O	1-560-300-00	POST HEADER 3P	
CNJ412	O	1-560-301-00	POST HEADER 4P	
CNJ413	O	1-560-304-00	POST HEADER 8P	
CNJ954	O	1-560-304-00	POST HEADER 8P	
D2	S	8-719-940-03	1N4004	
D3	S	8-719-940-03	1N4004	
D4	S	8-719-940-03	1N4004	
D5	S	8-719-940-03	1N4004	
D6	S	8-719-940-03	1N4004	
D7	S	8-719-940-03	1N4004	
D8	S	8-719-940-03	1N4004	
D9	S	8-719-940-03	1N4004	
D10	S	8-719-911-19	1SS119	
D11	S	8-719-911-19	1SS119	
D12	S	8-719-911-19	1SS119	
D13	S	8-719-911-19	1SS119	
IC1	S	8-759-202-55	TC74HC244P	
IC2	S	8-759-202-56	TC74HC245P	
IC3	S	8-759-202-55	TC74HC244P	
IC4	S	8-759-202-26	TC74HC138P	
IC5	S	8-759-937-40	DG212CJ	
IC6	S	8-759-906-79	AD7574JN	
IC7	S	8-759-918-28	AD7545JN	
IC8	S	8-759-990-04	TL074CN	
IC9	S	8-759-937-40	DG212CJ	
IC10	S	8-759-990-04	TL074CN	
IC11	S	8-759-990-04	TL074CN	
IC12	S	8-759-202-17	TC74HC14P	
IC13	S	8-759-202-17	TC74HC14P	
IC14	S	8-759-202-24	TC74HC86P	
IC15	S	8-759-000-XX	MC74HC74N	

Ref. No.	SP	SONY Parts No.	Description
IC16	S	8-759-000-XX	MC74HC74N
IC17	S	8-759-203-30	TC74HC365P
IC18	S	8-759-001-42	MC74HC174N
IC19	S	8-759-001-42	MC74HC174N
IC20	S	8-759-203-21	TC74HC273P
IC21	S	8-759-354-52	HD75452
IC22	S	8-759-354-52	HD75452
IC23	S	8-759-990-04	TL074CN
IC24	S	8-759-933-90	VFC32KP
IC25	S	8-759-910-56	2150A
IC26	S	8-759-990-04	TL074CN
IC27	S	8-759-982-48	RC79L12A
JU1	S	1-566-388-11	PIN,SHORT
JU2	S	1-566-388-11	PIN,SHORT
L1	S	1-421-329-00	COIL,CHOKE
Q1	S	8-729-208-04	2SK422
Q2	S	8-729-208-04	2SK422
Q3	S	8-729-208-04	2SK422
Q4	S	8-729-208-04	2SK422
Q5	S	8-729-905-68	J-111
Q6	S	8-729-905-68	J-111
R1	S	1-249-429-11	CARBON 10K 5% 1/4W
R2	S	1-249-429-11	CARBON 10K 5% 1/4W
R3	S	1-249-426-11	CARBON 5.6K 5% 1/4W
R5	S	1-247-881-00	CARBON 120K 5% 1/4W
R6	S	1-214-549-00	METAL FILM 470 1% 1/8W
R7	S	1-214-581-00	METAL FILM 10K 1% 1/8W
R8	S	1-214-581-00	METAL FILM 10K 1% 1/8W
R9	S	1-214-578-00	METAL FILM 7.5K 1% 1/8W
R11	S	1-214-581-00	METAL FILM 10K 1% 1/8W
R12	S	1-214-581-00	METAL FILM 10K 1% 1/8W
R13	S	1-249-429-11	CARBON 10K 5% 1/4W
R14	S	1-249-437-11	CARBON 47K 5% 1/4W
R15	S	1-249-429-11	CARBON 10K 5% 1/4W
R16	S	1-215-827-11	METAL FILM 75K 1% 1/8W
R17	S	1-214-774-00	METAL FILM 75K 1% 1/4W
R18	S	1-249-426-11	CARBON 5.6K 5% 1/4W
R19	S	1-214-591-00	METAL FILM 27K 1% 1/8W
R20	S	1-214-568-00	METAL FILM 3K 1% 1/8W

Ref. No.	SP	SONY Parts No.	Description
R21	S	1-214-588-00	METAL FILM 20K 1% 1/8W
R22	S	1-214-525-00	METAL FILM 47 1% 1/8W
R23	S	1-214-572-00	METAL FILM 4.3K 1% 1/8W
R24	S	1-214-588-00	METAL FILM 20K 1% 1/8W
R25	S	1-214-581-00	METAL FILM 10K 1% 1/8W
R26	S	1-214-581-00	METAL FILM 10K 1% 1/8W
R27	S	1-214-581-00	METAL FILM 10K 1% 1/8W
R28	S	1-214-581-00	METAL FILM 10K 1% 1/8W
R29	S	1-214-581-00	METAL FILM 10K 1% 1/8W
R30	S	1-249-421-11	CARBON 2.2K 5% 1/4W
R31	S	1-247-887-00	CARBON 220K 5% 1/4W
R32	S	1-247-881-00	CARBON 120K 5% 1/4W
R33	S	1-214-581-00	METAL FILM 10K 1% 1/8W
R34	S	1-214-581-00	METAL FILM 10K 1% 1/8W
R35	S	1-214-581-00	METAL FILM 10K 1% 1/8W
R36	S	1-214-581-00	METAL FILM 10K 1% 1/8W
R37	S	1-214-581-00	METAL FILM 10K 1% 1/8W
R38	S	1-214-581-00	METAL FILM 10K 1% 1/8W
R39	S	1-214-581-00	METAL FILM 10K 1% 1/8W
R40	S	1-249-405-11	CARBON 100 5% 1/4W
R41	S	1-249-405-11	CARBON 100 5% 1/4W
R42	S	1-249-405-11	CARBON 100 5% 1/4W
R43	S	1-249-405-11	CARBON 100 5% 1/4W
R44	S	1-249-426-11	CARBON 5.6K 5% 1/4W
R45	S	1-249-426-11	CARBON 5.6K 5% 1/4W
RN1	S	1-231-409-00	RES,BLOCK 5.6K
RN2	S	1-231-409-00	RES,BLOCK 5.6K
RN3	S	1-231-409-00	RES,BLOCK 5.6K
RV1	S	1-228-110-00	ADJ,CERMET 2K
RV2	S	1-228-120-00	ADJ,CERMET 20K
RV3	S	1-228-120-00	ADJ,CERMET 20K
RV4	S	1-237-521-21	ADJ,METAL FILM 100K

Ref. No.	SP	SONY Parts No.	Description
TTS BOARD			
	O	A-7850-381-A	MOUNTED PCB,TTS (This assembly includes the following parts.)
C1	S	1-126-096-11	ELECT 10MF 20% 25V
C2	S	1-126-096-11	ELECT 10MF 20% 25V
C3	S	1-126-096-11	ELECT 10MF 20% 25V
C6	S	1-162-710-11	CERAMIC 100PF 5% 50V
C7	S	1-162-710-11	CERAMIC 100PF 5% 50V
C8	S	1-161-485-00	CERAMIC 0.1MF 50V
C9	S	1-161-485-00	CERAMIC 0.1MF 50V
CNJ1	O	1-560-302-00	POST HEADER (IL CONNECTOR) 5P
D1	S	8-719-110-22	RD11ES-B2
D2	S	8-719-109-85	RD5.1ES-B2
D3	S	8-719-109-85	RD5.1ES-B2
IC1	S	8-745-211-00	DM-211
IC2	S	8-759-990-04	TL074CN
R1	S	1-249-393-11	CARBON 10 5% 1/4W
R2	S	1-249-393-11	CARBON 10 5% 1/4W
R3	S	1-247-711-11	CARBON 680 5% 1/4W
R4	S	1-247-711-11	CARBON 680 5% 1/4W
R5	S	1-249-433-11	CARBON 22K 5% 1/4W
R6	S	1-249-433-11	CARBON 22K 5% 1/4W
R7	S	1-249-433-11	CARBON 22K 5% 1/4W
R8	S	1-249-433-11	CARBON 22K 5% 1/4W
R9	S	1-249-421-11	CARBON 2.2K 5% 1/4W
R10	S	1-249-421-11	CARBON 2.2K 5% 1/4W
R11	S	1-247-887-00	CARBON 220K 5% 1/4W
R12	S	1-247-887-00	CARBON 220K 5% 1/4W
R13	S	1-249-421-11	CARBON 2.2K 5% 1/4W
R14	S	1-249-421-11	CARBON 2.2K 5% 1/4W
RV1	S	1-237-501-21	ADJ,METAL FILM 2K
RV2	S	1-237-501-21	ADJ,METAL FILM 2K

Ref. No.	SP	SONY Parts No.	Description
VVT BOARD			
	O	A-7850-626-A	COMPLETE PCB, VVT
		(T-9482-436-1)	
		(This assembly includes the following parts.)	
	O	1-565-413-11	RECEPTACLE, CONNECTOR 2P
C1	S	1-161-485-00	CERAMIC 0.1 50V
C2	S	1-161-485-00	CERAMIC 0.1 50V
C3	S	1-123-611-00	ELECT 1 20% 50V
C4	S	1-162-671-11	CERAMIC 22P 5% 50V
C5	S	1-162-671-11	CERAMIC 22P 5% 50V
C6	S	1-162-871-11	CERAMIC 47P 5% 50V
C7	S	1-162-795-21	CERAMIC 0.012 10% 50V
C8	S	1-162-795-21	CERAMIC 0.012 10% 50V
C9	S	1-136-175-00	FILM 0.68 5% 50V
C10	S	1-162-795-21	CERAMIC 0.012 10% 50V
C11	S	1-162-795-21	CERAMIC 0.012 10% 50V
C12	S	1-136-175-00	FILM 0.68 5% 50V
C13	S	1-162-795-21	CERAMIC 0.012 10% 50V
C14	S	1-161-485-00	CERAMIC 0.1 50V
C15	S	1-161-485-00	CERAMIC 0.1 50V
C16	S	1-161-485-00	CERAMIC 0.1 50V
C17	S	1-161-485-00	CERAMIC 0.1 50V
C18	S	1-161-485-00	CERAMIC 0.1 50V
C19	S	1-161-485-00	CERAMIC 0.1 50V
C20	S	1-161-485-00	CERAMIC 0.1 50V
C21	S	1-161-485-00	CERAMIC 0.1 50V
C22	S	1-161-485-00	CERAMIC 0.1 50V
C23	S	1-161-485-00	CERAMIC 0.1 50V
C24	S	1-161-485-00	CERAMIC 0.1 50V
C25	S	1-161-485-00	CERAMIC 0.1 50V
C26	S	1-161-485-00	CERAMIC 0.1 50V
C27	S	1-161-485-00	CERAMIC 0.1 50V
C28	S	1-161-485-00	CERAMIC 0.1 50V
C29	S	1-161-485-00	CERAMIC 0.1 50V
C30	S	1-161-485-00	CERAMIC 0.1 50V
C31	S	1-161-485-00	CERAMIC 0.1 50V
C32	S	1-161-485-00	CERAMIC 0.1 50V
C33	S	1-161-485-00	CERAMIC 0.1 50V
C34	S	1-161-485-00	CERAMIC 0.1 50V
C35	S	1-161-485-00	CERAMIC 0.1 50V
C36	S	1-161-485-00	CERAMIC 0.1 50V
C37	S	1-161-485-00	CERAMIC 0.1 50V
CNJ480	O	1-560-300-00	POST HEADER (IL CONNECTOR) 3P
CNJ481	O	1-564-693-21	CONNECTOR, RIBBON CABLE 10P

Ref. No.	SP	SONY Parts No.	Description
D1	S	8-719-109-85	RD5.1ES-B2
D2	S	8-719-109-85	RD5.1ES-B2
D3	S	8-719-991-40	1N914
D4	S	8-719-109-85	RD5.1ES-B2
D5	S	8-719-109-85	RD5.1ES-B2
D6	S	8-719-991-40	1N914
D7	S	8-719-991-40	1N914
D8	S	8-719-991-40	1N914
DS1	S	8-719-812-43	TLG124A
DS2	S	8-719-812-41	TLR124
IC1A	S	8-759-202-86	TC74HC123P
IC2A	S	8-759-202-86	TC74HC123P
IC3A	S	8-759-202-32	TC74HC163P
IC4A	S	8-759-202-32	TC74HC163P
IC5A	S	8-759-202-93	TC74HC153P
IC6A	S	8-759-045-57	MC14557BCP
IC7A	S	8-759-202-83	TC74HC107P
IC8A	S	8-759-202-93	TC74HC153P
IC9A	S	8-759-202-86	TC74HC123P
IC2B	S	8-759-202-11	TC74HC00P
IC3B	S	8-759-202-32	TC74HC163P
IC4B	S	8-759-202-32	TC74HC163P
IC5B	S	T-9413-794-1	TBP24S10N-VVT, PROM
IC6B	S	8-759-004-64	MC74HC126N
IC7B	S	8-759-901-89	SN74LS189AN
IC8B	S	8-759-202-92	TC74HC151P
IC9B	S	8-759-952-07	SN75207BN
IC1C	S	8-759-007-18	MC74HC4046N
IC2C	S	8-759-202-17	TC74HC14P
IC3C	S	8-759-000-99	MC74HC74N
IC4C	S	8-759-202-86	TC74HC123P
IC5C	S	8-759-000-99	MC74HC74N
IC7C	S	8-759-910-76	CX7913A
IC9C	S	8-759-900-72	NE5532P
JU1	S	1-566-388-11	PIN, CONNECTOR 2P
JU2	S	1-566-388-11	PIN, CONNECTOR 2P
L1	S	1-421-329-00	COIL, CHOKE
Q1	S	8-729-139-04	2N3904
Q2	S	8-729-139-04	2N3904
Q3	S	8-729-139-04	2N3904

Ref. No.	SP	SONY Parts No.	Description			
R1	S	1-214-557-00	METAL	1K	1%	1/8W
R2	S	1-215-829-11	METAL	91K	1%	1/8W
R3	S	1-214-581-00	METAL	10K	1%	1/8W
R4	S	1-214-553-00	METAL	680	1%	1/8W
R5	S	1-214-557-00	METAL	1K	1%	1/8W
R6	S	1-247-903-00	CARBON	1M	5%	1/4W
R7	S	1-249-417-11	CARBON	1K	5%	1/4W
R8	S	1-214-564-00	METAL	2K	1%	1/8W
R9	S	1-214-551-00	METAL	560	1%	1/8W
R10	S	1-249-421-11	CARBON	2.2K	5%	1/4W
R11	S	1-249-441-11	CARBON	100K	5%	1/4W
R12	S	1-249-421-11	CARBON	2.2K	5%	1/4W
R13	S	1-249-441-11	CARBON	100K	5%	1/4W
R14	S	1-249-417-11	CARBON	1K	5%	1/4W
R15	S	1-247-903-00	CARBON	1M	5%	1/4W
R16	S	1-249-426-11	CARBON	5.6K	5%	1/4W
R17	S	1-249-426-11	CARBON	5.6K	5%	1/4W
R18	S	1-249-426-11	CARBON	5.6K	5%	1/4W
R19	S	1-249-417-11	CARBON	1K	5%	1/4W
R20	S	1-249-417-11	CARBON	1K	5%	1/4W
R21	S	1-247-903-00	CARBON	1M	5%	1/4W
R22	S	1-214-584-00	METAL	13K	1%	1/8W
R23	S	1-215-828-11	METAL	82K	1%	1/8W
R24	S	1-249-417-11	CARBON	1K	5%	1/4W
R25	S	1-247-887-00	CARBON	220K	5%	1/4W
R26	S	1-214-580-00	METAL	9.1K	1%	1/8W
R27	S	1-214-593-00	METAL	33K	1%	1/8W
R28	S	1-215-827-11	METAL	75K	1%	1/8W
R29	S	1-215-822-11	METAL	47K	1%	1/8W
R30	S	1-214-588-00	METAL	20K	1%	1/8W
R31	S	1-249-417-11	CARBON	1K	5%	1/4W
R32	S	1-249-426-11	CARBON	5.6K	5%	1/4W
R33	S	1-247-896-11	CARBON	510K	5%	1/4W
R34	S	1-249-426-11	CARBON	5.6K	5%	1/4W
R35	S	1-247-896-11	CARBON	510K	5%	1/4W
R36	S	1-249-426-11	CARBON	5.6K	5%	1/4W
R37	S	1-249-393-11	CARBON	10	5%	1/4W
R38	S	1-249-393-11	CARBON	10	5%	1/4W
R39	S	1-249-441-11	CARBON	100K	5%	1/4W
Y1	S	1-527-977-00	OSCILLATOR, CRYSTAL			
Y2	S	1-527-227-00	OSCILLATOR, CRYSTAL			

Ref. No.	SP	SONY Parts No.	Description

FRAME

FRONT PANEL ASSY

S	T-9413-284-1	HEADPHONE JACK 3FP
O	1-509-988-00	HOUSING (IL CONNECTOR) 8P
S	1-509-991-00	SOCKET,11P
O	1-560-298-00	TERMINAL,SOLDERLESS

HEAD STACK (1/4) SUB ASSY

S	T-9410-181-1	1/4" 2TRK (NAB) REC HEAD
S	T-9412-251-1	CN CONTACT 204351-1
S	1-543-447-11	1/4" 2TRK (NAB) REP 80MH
S	T-9412-410-1	ERASE HEAD (For APR-5002A)
S	1-543-450-11	HEAD,1/4",TC ERASE/TC RP (For APR-5003V)
S	1-543-449-11	HEAD,1/4",2TRK,ERASE, TC FORMAT (For APR-5003V)
O	1-937-559-12	HARNESS (HEAD STACK)
		(This assembly includes the following parts.)
S	1-9412-251-1	CN CONTACT 204351-1

LIFTER & SHIELD ASSY

S	1-454-426-41	SOLENOID,PLUNGER
O	1-937-558-11	HARNESS (EOT-KBD)
		(This assembly includes the following parts.)
O	1-509-985-00	HOUSING (IL CONNECTOR) 4P

MAIN ASSY

O	T-9482-689-1	HARNESS ASSY
O	1-937-527-11	HARNESS (TTS,HES-TIB SUB)
O	1-937-528-11	HARNESS (POWER SUPPLY SUB)
O	1-937-529-11	HARNESS (I/O UNCAL SUB)
O	1-937-530-11	HARNESS (BIAS/ER/REC SUB)
O	1-937-531-11	HARNESS (SYNC SUB)
O	1-937-532-11	HARNESS (RTS-TIB(R))
O	1-937-533-11	HARNESS (RELAY CONTROL)
O	1-937-534-11	HARNESS (PROCESSOR INTRFC)
O	1-937-535-11	HARNESS (CPU-LNT)
O	1-937-536-11	HARNESS (CPU-TIB)
O	1-937-537-11	HARNESS (LOGIC INTERCONNECT)
O	1-937-538-11	HARNESS (METER & CH STATUS)
O	1-937-539-11	HARNESS (RTS-TIB(L))
O	1-937-561-11	HARNESS (HBH)

Ref. No.	SP	SONY Parts No.	Description
		METER MODULE ASSY	
	S	T-9412-212-1	METER,VU WS-250
	S	T-9412-216-1	LAMP ML7352
	S	1-237-945-11	RES, VAR, CARBON 5K
	O	1-564-792-11	WAFER ASSY 5P
		METER MODULE TC ASSY (For APR-5003V)	
	S	T-9412-212-1	METER,VU WS-250
	S	T-9412-216-1	LAMP ML7352
		MONITOR HOUSING (TC) ASSY	
	O	1-937-552-11	HARNESS (MUTE SWITCHING)
		PINCH ROLLER ASSY	
	S	1-454-427-11	SOLENOID,PLUNGER
		POWER CSL SUB ASSY	
	S	1-548-100-31	TIMER
	O	1-937-545-11	HARNESS (LIFE METER)

Ref. No.	SP	SONY Parts No.	Description
		POWER SUPPLY ASSY	
	S	T-9412-405-2	POWER TRANSFORMER
	S	1-125-454-11	ELECT 10000MF 50V
	S	1-125-455-11	ELECT 22000MF 50V
	S	1-125-484-11	ELECT 39000MF 25V
	O	1-535-446-00	TERMINAL,FASTEN
	O	1-535-419-00	TAB,FASTEN (PCB)
	S	1-541-409-21	MOTOR,FAN
	S	1-554-066-00	SWITCH, SEESAW (AC POWER)
	O	1-620-303-11	PC BOARD,SBR
	O	1-937-540-12	HARNESS (POWER SUB)
	O	⚠1-937-541-12	HARNESS (POWER SWITCH)
	O	1-937-543-12	HARNESS (BRIDGE 1) (This assembly includes the following parts.)
	S	⚠8-719-500-27	S15VB60
	O	1-937-921-12	HARNESS (BRIDGE 2) (This assembly includes the following parts.)
	S	⚠8-719-500-27	S15VB60
	O	1-937-922-11	HARNESS (BRIDGE 3) (This assembly includes the following parts.)
	S	⚠8-719-500-27	S15VB60
		(SBR BOARD)	(This board has been deleted from Serial No. 20701 (APR-5002))
D1	S	8-719-940-68	SBD1640T
D2	S	8-719-940-68	SBD1640T

Ref. No.	SP	SONY Parts No.	Description
		REAR PANEL ASSY	
	S	⚠T-9412-524-1	AC INLET
	S	1-161-051-00	CERAMIC 0.01MF 10% 50V
	S	1-214-105-00	METAL FILM 75 1% 1/4W
	S	1-509-176-51	CONNECTOR (RECEPTACLE) 3P
	S	1-509-184-51	CONNECTOR (RECEPTACLE) 3P
	O	1-509-984-00	HOUSING (IL CONNECTOR) 3P
	S	1-516-783-XX	SWITCH, SLIDE
	S	⚠1-533-167-00	HOLDER,FUSE
	S	1-533-169-00	HOLDER,FUSE
	O	1-535-279-11	TERMINAL,SOLDERLESS
	O	1-560-298-00	TERMINAL,SOLDERLESS
	S	1-560-764-21	TERMINAL,SOLDERLESS
	S	1-561-781-21	CONNECTOR,BNC (RECEPTACLE)
	O	1-562-665-11	SOCKET,CONNECTOR (WITH LOCK) 4P
	O	1-937-546-12	HARNESS (REAR PANEL SUB)
	O	1-937-547-11	HARNESS (NOISE REDUCTION)
		SPEAKER MODULE ASSY	
	S	1-237-946-11	RES, VAR, CARBON 5K/5K
	S	1-503-291-00	SPEAKER
	O	1-937-555-11	HARNESS (SPEAKER)
	O	1-937-556-11	HARNESS (MONITOR ATTEN)
		S-REEL BRAKE ASSY	
	S	1-454-426-41	SOLENOID,PLUNGER
		T-REEL BRAKE ASSY	
	S	1-454-426-41	SOLENOID,PLUNGER

10-3 ACCESSORIES SUPPLIED (APR-5002/5003V)

Ref. No.	SP	SONY Parts No.	Description
ACCESSORIES SUPPLIED			
	S	A-7850-380-A	MOUNTED PCB,EXT
	S	T-9412-748-1	FUSE,FAST ACTING 5A
	S	⚠T-9413-261-1	FUSE,FAST ACTING 4A
	S	T-9413-262-1	FUSE,FAST ACTING 2A
	S	T-9450-121-1	NAB REEL LOCK
	S	⚠1-551-812-00	CORD,POWER
	S	3-711-185-01	REEL SHIM
	O	3-711-294-01	COVER,HEAD PLATE
	S	7-682-547-09	SCREW +B 3x6

SECTION 11
RM-5010 REMOTE CONTROLLER INSTALLATION

11.1 INTRODUCTION

The RM-5010 Remote Controller is the optional parallel remote control accessory for the **APR-5000**. This will connect to the 50-pin parallel remote connector on the rear door, providing remote control and status from up to 10 meters away.

11.2 INSTALLATION

The RM-5010 is easily connected and disconnected to or from the **APR-5000** by means of the 50-pin parallel remote connector on the rear door. Always be sure to turn power OFF whenever connecting or disconnecting the RM-5010.

11.3 OPERATIONAL CHECKOUT

When the RM-5010 is first connected to the **APR-5000**, perform this operational checkout to make sure that all of the remote control functions are operational.

STEP 1 Turn the **APR-5000** power switch OFF.

STEP 2 Plug the 50-pin connector from the RM-5010 into the parallel remote connector on the rear door of the **APR-5000**.

STEP 3 Turn the power switch ON and thread a work tape onto the reels. Make sure that the tape breaks the EOT sensor beam.

STEP 4 On the RM-5010, press each of the remote control buttons listed below. Observe that the appropriate actions occur on the **APR-5000**:

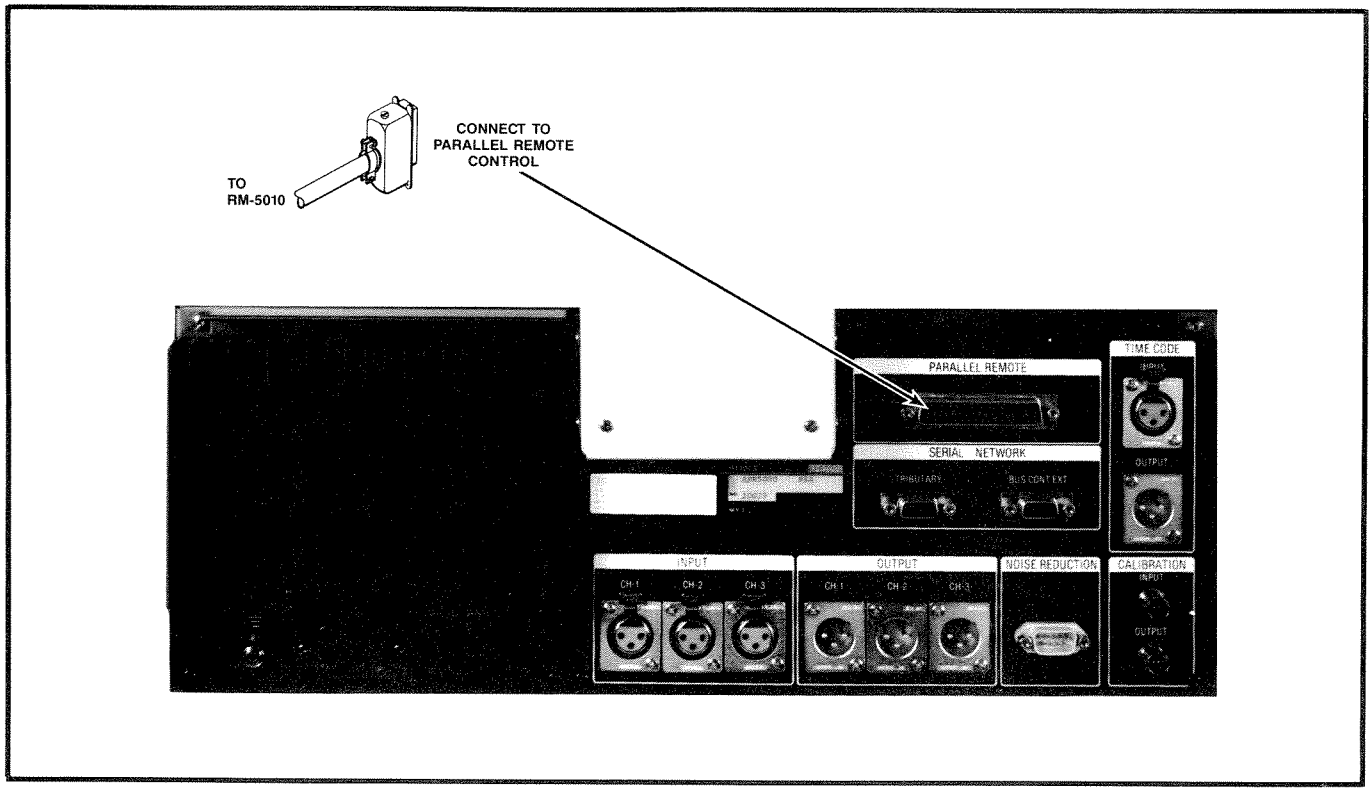

Connection of RM-5010

PLAY	The transport enters PLAY mode and the PLAY button on the RM-5010 illuminates.
FF	The transport enters FAST FORWARD mode with tape shuttling from the supply reel to the take-up reel. The FF button illuminates.
STOP	The transport motion stops and the deck enters STOP mode. The STOP button illuminates.
TAPE TIME RESET	The TAPE TIME display on the Transport Control Panel resets to zero.
REW	The transport enters FAST REWIND mode and the tape shuttles in the rewind direction. The REW button illuminates.
Touch the MVC knob momentarily	The transport enters SPOOL WIND mode and the wind speed becomes slower. The MVC indicator LED illuminates.
LIFTER DEFEAT	The LIFTER DEFEAT button illuminates and the lifters disengage, causing the tape to be shuttled over the heads. All of the audio channels are unmuted.
LOCATE	The REW button extinguishes and the LOCATE and FF buttons illuminate. The transport enters LOCATE mode shuttling tape in the forward direction until the TAPE TIME display reads "0", then the machine enters STOP mode with the STOP button illuminated.

STEP 5 Press the RECORD READY buttons for each of the channels on the machine. If the machine is an APR-5001, then only the leftmost RECORD READY button is operational. If the machine is an APR-5002, then the middle button corresponds to channel 2. The rightmost button is only used on the APR-5003 for setting the Time Code channel Record Ready. As each of the buttons is pressed, its condition (RECORD READY or SAFE) toggles. Leave all channels in the RECORD READY mode with the RECORD READY buttons illuminated.

STEP 6 Press the RECORD button. The transport enters the RECORD RECORD mode and the PLAY and RECORD buttons illuminate. The BIAS and ERASE LEDs for each of the channels on the Meter Housing and the corresponding LEDs on the RM-5010 are all illuminated.

STEP 7 Press the STOP button. The transport exits RECORD MODE ON ALL CHANNELS, then enters STOP mode.

STEP 8 Check the action of the MVC knob. This operates in exactly the same way as the MVC knob on the Transport Control Panel. The MVC indicator LED illuminates as soon as the MVC knob is touched, and the speed and direction of the tape are directly related to the physical position of the knob. When the knob is released, the MVC indicator LED extinguishes and the knob automatically self-centers. The transport returns to STOP mode.

11.4 ENGINEERING DRAWINGS

This section contains the engineering drawings for the RM-5010. For the principles of operation please refer to Section 3.3.

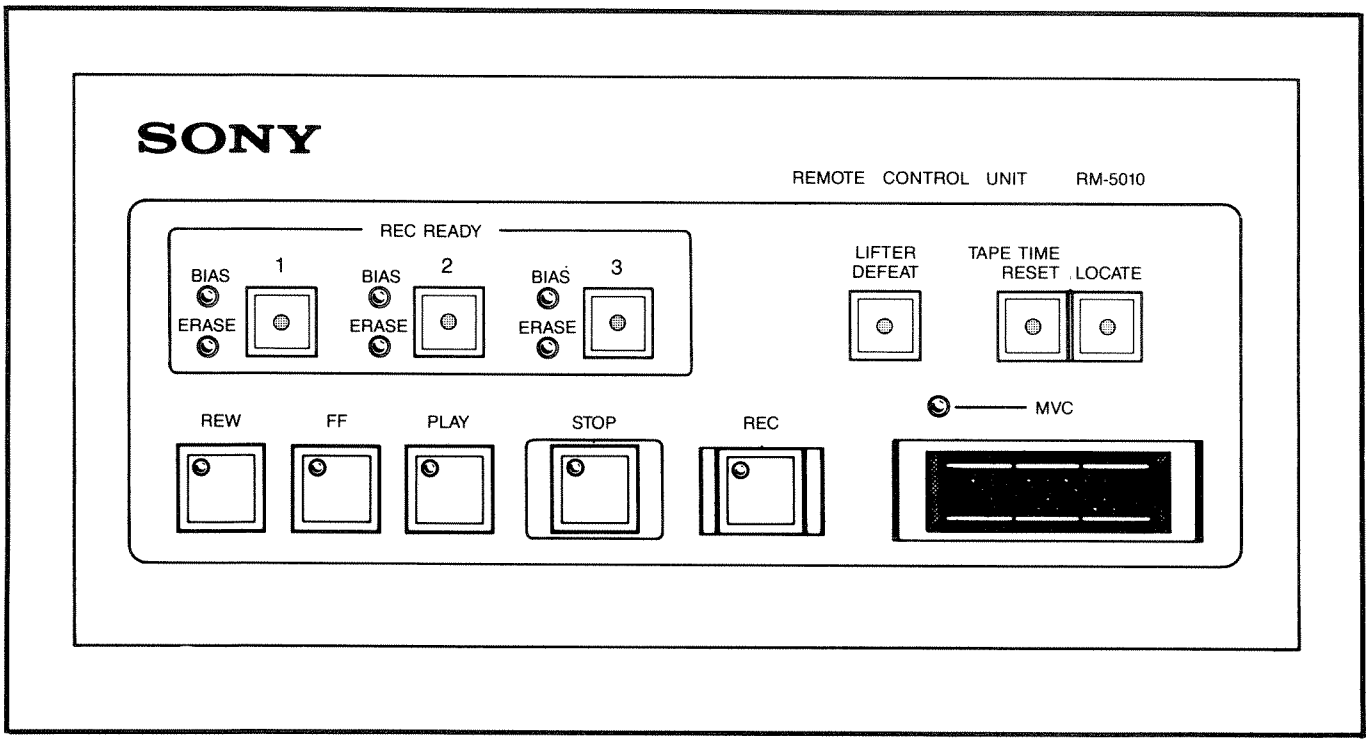

RM-5010 Mechanical Drawing

11-5. SCHEMATIC AND CIRCUIT BUARD DIAGRAMS

RMT COMPONENT LAYOUT

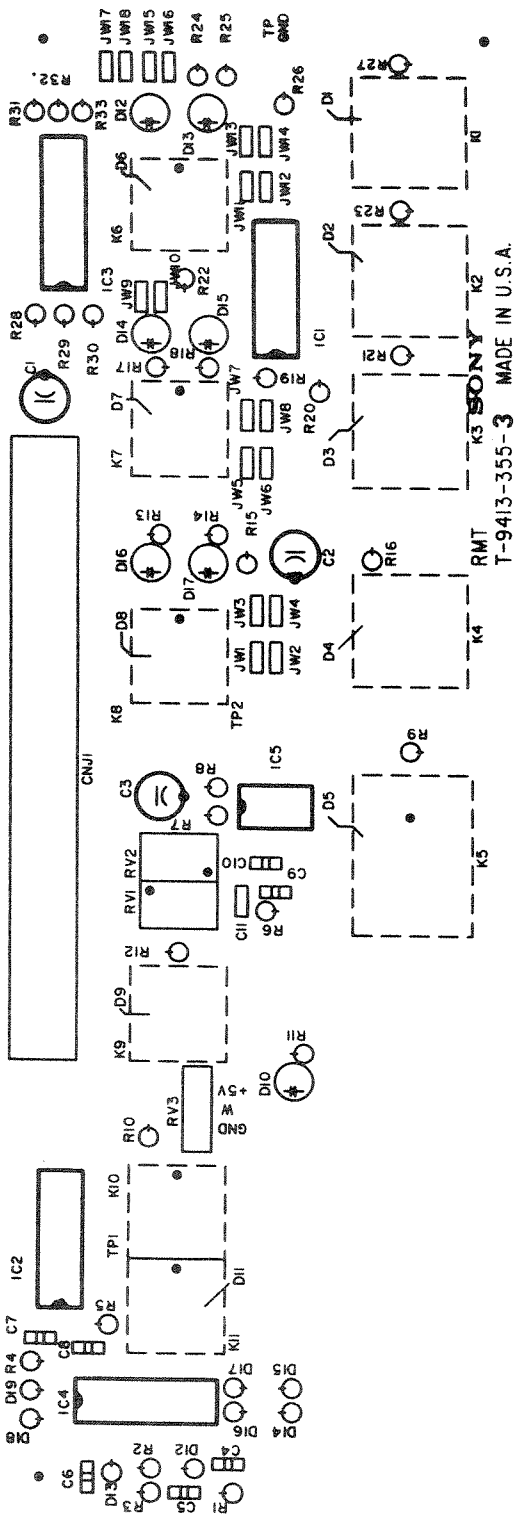

RMT

RMT SCHEMATIC DIAGRAM

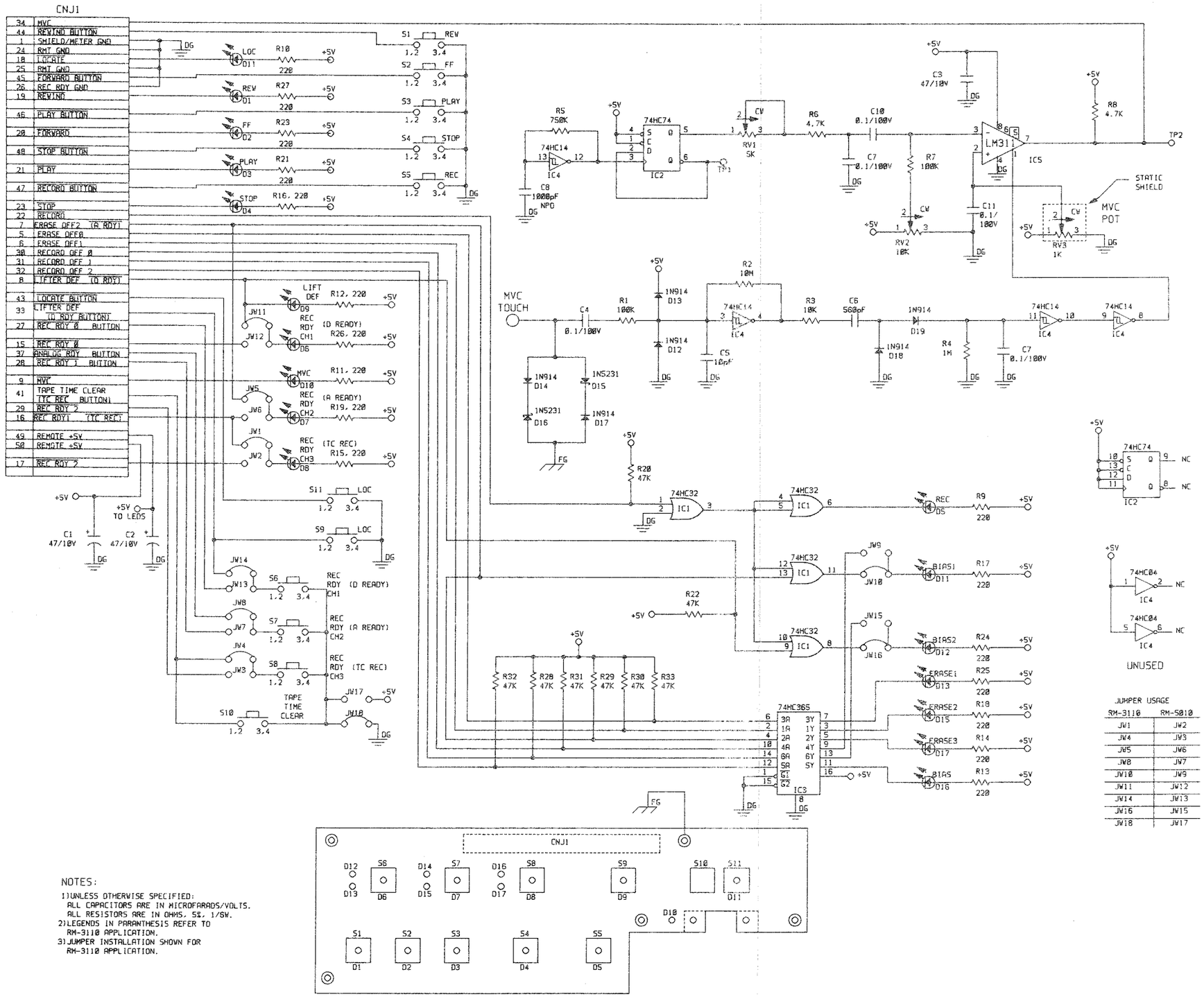

JUMPER USAGE

RM-3110	RM-5010
JW1	JW2
JW4	JW3
JW5	JW6
JW8	JW7
JW10	JW9
JW11	JW12
JW14	JW13
JW16	JW15
JW18	JW17

NOTES:

1) UNLESS OTHERWISE SPECIFIED:
ALL CAPACITORS ARE IN MICROFARADS/VOLTS.
ALL RESISTORS ARE IN OHMS, 5%, 1/5W.
2) LEGENDS IN PARANTHESIS REFER TO RM-3110 APPLICATION.
3) JUMPER INSTALLATION SHOWN FOR RM-3110 APPLICATION.

RM-5010 ASSEMBLY PARTS LIST

REF. NO.	PART NO.	DESCRIPTION	SERVICE CODE
C1 C2 C3	1-123-822-11	47UF/10V R,PO,LYTIC	S
RV1	1-228-763-11	TAPCPOT5K-18T	S
R10 R13 THRU R19 R21 R23 R25 R26 R27 R9 R11 R12 R24	1-247-815-51	220 OHM 1/6W 5% V,C	S
R8 R6	1-247-847-51	4.7K 1/6W 5% V,C	S
R3	1-247-855-51	10K 1/6W 5% V,C	S
R1 R7	1-247-879-51	100K 1/6W 5% V,C	S
R5	1-247-900-51	75OK 1/6W 5% VERT FORMED	S
R4	1-247-903-51	1M 1/6W 5% V,C	S
JW1 THRU JW18	1-560-733-11	JUMPER-PINS	S
	1-561-832-11	JUMPER SOCKET	O
CNJ1	1-564-734-21	CN STRAIGHT HDR 50P	O
	7-621-972-15	PS M2.6 x 5	S
	7-686-527-01	SCREW TOTSU PSW M3x6	S
D12 D13 D14 D17 D18 D19	8-719-991-40	DIODE 1N914	S

REF. NO.	PART NO.	DESCRIPTION	SERVICE CODE
IC2	8-759-000-99	IC 74HC74	S
IC4	8-759-202-17	IC 74HC14	S
IC1	8-759-202-21	IC 74HC32	S
IC3	8-759-203-30	IC 74HC365	S
IC5	8-759-909-33	IC LM311P T.I.	S
D15 D16	T-9410-338-1	DIODE 1N5231B	S
R2	T-9411-045-1	10M 1/4W 5% A,C	S
K9 K11	T-9411-068-1	SW PUSHBUTTON TM201L2	S
K10	T-9411-069-1	SW KEY W/O LED TM1-01	S
K6 THRU K11	T-9411-072-1	SW BEZEL TZ-2110	S
C5	T-9411-274-1	10PF/100V CERAMIC	S
C6	T-9411-295-1	560PF/100V CERAMIC	S
C8	T-9411-298-1	1000PF/100V CERAMIC	S
C4 C7 C9 C10 C11	T-9411-323-1	0.1UF/100V CERAMIC	S
K6 K7 K8	T-9412-170-1	SW PUCH AMBER TM2-01-L8	S
K6 K7 K8 K9 K11	T-9412-171-1	SW CVR SUB MINI TZ0811	S
D12 D13 D14 D15 D16 D17	T-9412-400-1	LED RED LN 29RP	S
D10	T-9412-403-1	LED GREEN LN 39GP	S
	T-9413-355-3	PCB RMT	S

REF. NO.	PART NO.	DESCRIPTION	SERVICE CODE
K1 THRU K5	T-9413-418-1	SWITCH TM4-L2	S
	T-9452-801-1	HOLDER VARIABLE RESISTOR	O
	T-9452-842-1	GUARD SW (LG)	O
K10	T-9452-844-1	SW CAP WHITE W/O WINDOW	S
	T-9452-848-1	SW FRAME, TM-04 (TZ-2210)	S
	T-9481-815-1	MVC ASSY.	S
	T-9481-862-1	ENGRAVED SW CAP SET	0
R20 R22 R28 THRU R33	1-247-871-51	47K, 1/6W, 5% V,C	S
RV2	1-226-698-11	POT 10K, 10T TOP	S

APPENDIX A
ERROR CODES

HE Headstack Error

This indicates that the identifcation code on the headstack is not properly set. Turn power switch OFF and remove the headstack. Make sure the DIP switiches are set to a proper identification code.

HI Headstack Invalid

This indicates that the headstack configuration cannot be used with the machine (i.e., 4 track or 8 track headstack).

HO Headstack Off

Indicates that the headstack connector is not properly mated with the connector on the deck. To correct the error make sure that the headstack is properly installed on the deck.

PE Preset Error

This indicates that the alignment stored in the preset memory location last chosen is invalid. To correct the error, either choose another preset memory location or store a valid alignment into the preset memory location which had the preset error.

APPENDIX B
LIST OF MNEMONICS

A ..... Amperes
AC ..... Alternating Current
ACM ..... Audio Control Motherboard
A/D ..... Analog-to-Digital
ADC..... Analog-to-Digital Converter
ADM ..... Audio Motherboard
ALN..... Aligment Control Panel

BCD..... Binary-coded Decimal
BIT ..... Binary Digit

CAL..... Calibrate or Calibrated
CMOS ..... Complementary Metal Oxide Semiconductor
CNL..... Channel Board
CNX..... Connector Board
CPU..... Central Processing Unit
CSL ..... Capstan Servo Loop
CTM..... Control/Meter Board

D/A ..... Digital-to-Analog
DAC..... Digital-to-Analog Converter
dB ..... Decibels
dBm..... A decibel power ratio measurement based on the standard reference level of 1 milliwatt of power dissipated in a 600 ohm line.
DC ..... Direct Current
DEC..... Decrease or decrement
DSP ..... Display Board

EOT..... End Of Tape
EQ ..... Equalization

FEX..... Front End Transformer Board
FF ..... Fast Forward

HC ..... High Speed CMOS
HES..... Hall Effect Sensor
HFREQ ..... High Frequency
HE ..... Headstack Error (error code)
HI ..... Headstack Invalid (error code)
HO ..... Headstack Off (error code)
Hz ..... Hertz (cycles per second)

IEC ..... International Electro-mechanical Commission
IN ..... Input
INC ..... Increase or increment
IND ..... Individual
I/O ..... Input/Output
ips ..... Inches per second

KBD..... Keyboard
kHz ..... Kilohertz (1000 Hz)

LED..... Light Emitting Diode
LFREQ ..... Low Frequency
LNT..... Local Network Transceiver
LS ..... Low Power Schottky
LVL ..... Level

MAX ..... Maximum
MHz ..... Megahertz
MID ..... Middle Speed
MIN ..... Minimum
MON ..... Monitor
MSB ..... Mute Switching Board
MST ..... Master Board
MVC ..... Manual Velocity Control

NAB ..... National Association of Broadcasters

OUT ..... Output

PDB ..... Power Distribution Board
PE ..... Preset Error

R ..... Reset
RCB ..... Record Feed Back Compensation
RCF ..... Record Feed Forward Compensation
RCL ..... Recall
REP ..... Repeat
REPRO ..... Reproduce or Playback
REW ..... Rewind
RGA ..... Regulator Board A (+5V)
RGB ..... Regulator Board B (+5V)
RGC ..... Regulator Board C (±18V)
RGC ..... Repro Gap Compensation
RGD ..... Regulator Board D (±15V and ±18V)
RMD ..... Reel Motor Driver
RMS ..... Root Mean Square
RTS ..... Reel Tach Sensor
RV ..... Variable Resistor or Potentiometer

SGC ..... Sync Gap Compensation
SMPTE ..... Society of Motion Picture and Television Engineers
STO ..... Store
SYNC ..... Record or Cue Mode

TC ..... Time Code
TC GEN ..... Time Code Generator
TC/DISPL .... Time Code/Display
TIB ..... Transport Interface Board
TK ..... Track or Channel
TP ..... Test Point
TRK ..... Track or Channel
TTS ..... Tape Tachometer Sensor

UNCAL ..... Uncalibrated

V ..... Volts
VRMS ..... AC RMS Volts
VARI ..... Variable Speed Play
VU ..... Volume Units

APPENDIX C
APR-5000 UNIQUE TOOLS

AMP #M24308/18-1 91067-1 Head Connector Pin Ext. Tool

DMC #M22520/2-01, Crimp Tool
#M22520/2-06, Crimp Tool Die Socket
#M22520/2-09, Crimp Tool Die Pin

ADDRESSES OF TOOL MANUFACTURERS

DMC
6103 Anno Avenue
Orlando, FL 32809

OHAUS Scale Corporation
29 Hanover Road
Florham Park, NJ 07932

Tentel Corporation
1506 Dell Avenue
Campbell, CA

APPENDIX D

SERIAL CONTROL WITH SONY BVE-900 and BVE-9000 EDITORS

GENERAL COMMENTS

The general behavior of the **APR-5003V** as a source machine is similar enough to that of a VTR as to be largely transparent to the operator. The machine's handling of time code, manual transport controls, and source selection in an edit appears to be virtually the same as normal VTR operation, but, because of limitations in editor architecture, certain edit types may require Mixer Setup changes.

Operation of the ATR with the editor does not utilize the ATR's CHASE, or other higher order features such as PREVIEW, EDIT or REVIEW. The editor simply instructs the ATR to shuttle and stop at specific points. VARIABLE SPEED PLAY commands provide the means to position the ATR to be synchronous before the IN POINT is reached. Once the correct synchronous operation is attained, the ATR is commanded to RESOLVE to the external video reference. The editor is the sole controlling entity in the process of the edit sequence.

CONNECTIONS AND SETUP

For proper serial control with SONY **BVE-900** and **BVE-9000** Editors, the following conditions must be met.

1. The Editor must be connected to the **APR-5003V** via the **TRIBUTARY** serial port on the rear panel of the machine. (See Figure 1.)

2. The house video reference must be connected to either one of the **VIDEO** ports on the rear panel, and the **TERMINATION** switch must be set as follows:

   a. Where the **APR-5003V** is the video reference terminating link, the switch must be set to **ON**.

   b. Where the video reference is daisy-chained to another device, the switch must be set to **OFF**.

3. Storage Location 37 must be set to 1, thereby selecting video as the resolving reference.

4. The correct tape speed must be selected relative to the Time Code on tape, and a consistent Time Code type must be used throughout the system.

5. The Setup Menus for VTR BLOCK #1 and VTR BLOCK #2 must be in accordance with the data given in the **Recommended Menu Setup for ATR usage as Player** section given later in this document.

It should be noted that, at power-up, the Editor disables the machine's local control with its initial commands. This can be re-established by pressing the **LOCAL** key on the Transport Control Panel. Furthermore, the serial control capability can be disengaged by deselecting the **NETWORK** key on the same panel.

METHODS OF USE

Stand Alone, Audio Only, Source Edits

In this application, the ATR operates as a stand-alone audio source, and programming an edit does not differ from normal VTR operation. Specifically, an audio only Cut or Dissolve from the ATR is programmed in the same manner as it would be for a video source. The ATR is not linked with any other Player. Time Code match frames are listed in the same manner as with VTR applications. Edit data for the ATR is preserved in the EDL.

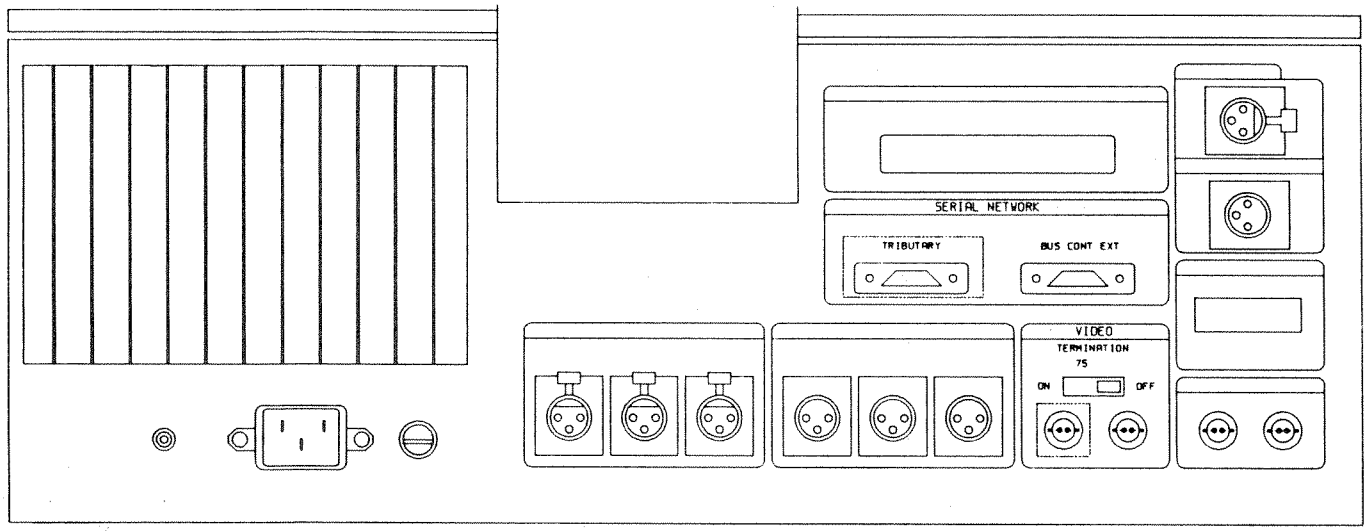

Figure 1. Rear Panel Connectors

Effect Type (Manual)

A Manual effect type allows the operator to choose a background and a foreground source for the edit. Selecting the ATR as the background source and a VTR as the foreground source allows the user to record Video from the VTR while recording audio from the ATR. Edit data relative to each source is preserved in the EDL. This application is most suitable for matching "sync-sound" with previously recorded video material.

CAUTION: Audio from the Foreground (VTR) source also is present in this edit unless the Fader associated with this player is muted or faded down.

ATR as Audio Source in a Cut with Video from another Player

This is an alternate method to the Effect Type (Manual) for combining audio from the ATR with Video from a player ATR. This method requires the manual re-assignment of the Mixer cross-points in the **BVE-900** Setup menu, as follows:

Mixer Block Reassignment

The Mixer Block Setup identifies for the editor the interconnections between mixer inputs and player outputs, i.e. which input channels of the mixer are connected with which output signals of the players. In this application, the user will simply exchange the identities of the audio and video sources so that the editor controls the ATR Fader as if it were the audio from the designated Video source.

Depending upon the mixer and its configuration, each cross-point assignment represents either two Mono Faders or one Stereo Line Input Fader. The SONY **MXP-29** will always provide two Mono channels for each source. The SONY **MXP-2000** can be configured either for dual Mono Fader operation, or can be configured with a single Stereo Line Input channel for each player.

EXAMPLE:

Initial Assignment:

P1 is designated Video Source Byte #2 assigned "01" (hex)

P3 is selected Audio Source (ATR) Byte #4 assigned "03" (hex)

Assignment Exchanged:

P1 is designated Video Source Byte #2 assigned "03" (hex)

P3 is selected Audio Source (ATR) Byte #4 assigned "01" (hex)

In this example, P1 is designated as the source of the edit. P3 should be selected with an asterisk "*" to assign the tandem roll of the ATR with P1. The ATR's Fader should be set to the desired level. The P1 VTR Fader position will have no effect on the audio edit. The P3 (ATR) Fader will be controlled by the editor as if it were the P1 (VTR) Fader.

It is very important to realize that no indication will appear in the EDL to identify P3 as the audio source in this edit.

ATR as Audio Source in a Dissolve or Wipe

The following examples illustrate situations in which one VTR's (P1) sync-sound is located on an ATR (P3).

Two Event Method:

The first event is programmed as a video only transition effect between P1 and P2. This preserves the video edit data in the EDL. The edit data specific to this event needs to be manually brought forward for use in the second event. The second event is programmed as an audio only transition effect between the **P3 (ATR)** and P2. This would register the sync-sound audio edit data in the EDL, thus providing sufficient data for the operator to re-create this edit sequence. The Mixer cross-points need not be reassigned when using this technique.

Single Event Methods:

General Notes

The Single event techniques identified below require that Mixer cross-points be reassigned. Please refer to the section above on "Mixer Block reassignment".

It also is helpful to remember that, in any effect, by selecting the ATR (P3) with an asterisk "*", the ATR is thus selected to perform a tandem roll with the **first** source in the edit process.

Match Frame; ATR in Tandem roll with "From" or "To" Machine

In this example, the P1 VTR is the video source whose sync-sound is located on the P3 ATR. A match frame transition effect from P1 to P2 or from P2 to P1 would be programmed in the customary manner, with the additional requirement that a tandem roll with the ATR be invoked by means of the asterisk "*" selection.

It is important to ensure that P1's mixer block assignment is exchanged with that of the P3 ATR. After the edit is complete, the assignment may be returned to its original settings.

As in any edit where the mixer block is reassigned, this setup information will not appear in the EDL, neither will P3's participation in this edit be preserved.

Delayed Transition; ATR in tandem with "From" Machine

In this example, the P1 VTR is the video source whose sync-sound is located on the P3 ATR. A delayed transition effect from P1 to P2 would be programmed in the customary manner, with the additional requirement that a tandem roll with the ATR be invoked by means of the asterisk "*' selection.

It is important to ensure that P1's mixer block assignment is exchanged with that of the P3 ATR.

After the edit is complete, the assignment may be returned to its original settings.

As in any edit where the mixer block is reassigned, this setup information will not appear in the EDL, neither will P3's participation in this edit be preserved.

Delayed Transition; ATR in tandem with "To" Machine

In this example, the P1 VTR is the video source whose sync-sound is located on the P3 ATR. A delayed transition effect from **P2** to **P1** would be programmed in the customary manner, with two additional requirements.

First, that a tandem roll with the ATR be invoked by means of the asterisk "*" selection.

Second, that the duration of the P2 edit ("From machine") be subtracted from the P3 (ATR) IN POINT. Remember, by selecting the ATR (P3) with an asterisk "*", the ATR is selected to perform a tandem roll with the **first** source in the edit process.

Again, it is important to ensure that the P1 Mixer Block assignment is exchanged with that of the P3 ATR. After the edit, the assignment may be returned to its original settings.

As in any edit where the mixer block is reassigned, this setup information will not appear in the EDL, neither will P3's participation in this edit be preserved.

Other restrictions to the use of the APR-5003V as a Player

The **APR-5003V** will not perform a synchronous DMC edit. The APR cannot provide synchronous and frame accurate operation with video at anything other than normal forward speed. However, if the ATR is assigned a sync grade of "Preroll and Play" (SYC4) the ATR will accept and perform a programmed DMC edit in the forward direction only. The **APR-5003V** will allow audio monitoring at DMC variable speeds in the forward direction without any special Auxiliary Menu changes.

For best results, 15 ips tape speed should be used with SONY **BVE900/9000** Editors. 30 ips has good performance, but program duration is limited by the rapid rate of tape usage. In addition, LOCATE times become longer at 30 ips. At 7.5 ips operation the editor is at somewhat of a disadvantage in that, in pursuit of synchronization, the editor's control actions tend to compromise Time Code read integrity. Thus, while both 7.5 and 30 ips speeds are fully functional, the best combination of fidelity, tape utilization, and locking integrity is realized at 15 ips operation.

Recommended Menu Setup for ATR usage as Player.

"VTR BLOCK #1" SETUP MENU

		NSTC Settings		PAL settings	
Byte 1	(Device Type)	01010000	50	01010000	50
Byte 2	(Device Type)	00000000	00	00000000	00
Byte 3	(Preroll Duration)	00000001	01	00000000	00
Byte 4	(Preroll Duration)	00101100	2C	11111010	FA
Byte 5	(Edit Delay)				
	For 30 ips	00000011	03	00000011	03
	For 15 ips	00000100	04	00000100	04
	For 7.5 ips	00000110	06	00000110	06
Byte 6	(EE Delay)	00000001	01	00000001	01
Byte 7	(Overrun):				
	For 30 ips	00001011	0B	00001010	0A
	For 15 ips	00000111	07	00000110	06
	For 7.5 ips	00001011	0B	00001010	0A
Byte 8	(Trajectory Const)				
	With **BVE-900** Editor				
	For 30 and 15 ips	00111111	3F	00111111	3F
	For 7.5 ips	00010101	15	00010101	15
	With **BVE-9000** Editor				
	For 30 and 15 ips	10111111	BF	10111111	BF
	For 7.5 ips	10010101	95	10010101	95

"VTR BLOCK #2" SETUP MENU

		NSTC Settings		PAL settings	
Byte 1	(TC Read Delay)	00011111	1F	00011010	1A
Byte 2	(Start Delay):				
	For 30 ips	00001101	0D	00001011	0B
	For 7.5 and 15 ips	00001011	0B	00001010	0A
Byte 3	(After Sync Delay −)	11111101	FD	11111101	FD
Byte 4	(After Sync Delay +)	00000010	02	00000010	02
Byte 5	(Max Framing Enable)	00000000	00	00000000	00
Byte 6	(CF Status Enable)	01111000	78	01111000	78
Byte 7	(Pre roll speed)	00001010	0A	00001010	0A
Byte 8	(Quick Preroll)				
	With **BVE-900** Editor	n/a		n/a	
	With **BVE-9000** Editor	00111011	3B	00111011	3B

APPENDIX E

APR-5003V STORAGE/RECALL REGISTER INDEX

Location Number	Location Name	Argument Range
Position Registers 00-29		
00	Synchronization Offset, Frames	time
01	Current IN POINT Preset	time
02	Current OUT POINT Preset	time
03-27	LOCATE Time (Cue Position Data)	time
28	REPEAT Start Time	time
29	REPEAT Stop Time	time
Enables/Disables and Selects 30-49		
30	Auto TC Enable	0/1
31	Time Code Type (SMPTE, EBU, FILM) Select	0/1/2
32	Drop Frame Select (SMPTE only)	0/1/2
33	Remote CHASE Enable	0/1
34	*Reserved*	
35	Burst Time Code Enable	0/1
36	Wind Speed Limit Enable	0/1
37	Establish Lock Reference Select	0/1
38	Maintain Lock Reference Select	0/1/2/3
39	RESOLVE ON PLAY Enable	0/1
40	Auto Shift Down Enable	0/1
41	Ips/Semitone VARI SPEED Display Select	0/1
42	*Reserved*	
43	Triggered EDIT Operation Enable	0/1
44-49	Not Assigned	
Presets 50-59		
50	Acceleration Allowance Preset	time
51	PREROLL DURATION Preset	time
52	POSTROLL DURATION Preset	time
53-59	Not Assigned	
Reserved and non-assigned Registers 60-74		
60-64	*Reserved*	
65-69	Not Assigned	
70-74	*Reserved*	
Special Operations 90-99		
90	Not Assigned	
91	Current IN POINT Bit Delay	00-79
92	Current OUT POINT Bit Delay	00-79
93	FIND Enable	0/1-10
94	Not Assigned	
95	PREVIEW Enable	0/1
96	EDIT Enable	0/1
97	REVIEW Enable	0/1
98	BIT BUMP (Sub-frame Offset)	dial
99	Offset Calculation, Frames	none

APPENDIX F

BAUD RATE SELECTION

For **APR-5003V** operations with all SONY Editor equipments, the baud rate is fixed at 38.4 kilobauds (kbaud). However, the **APR-5003V** may be used at slower baud rates to accomodate other applications. Such other applications could be software created by either the user or by independent developers, this software most likely being run on personal computers. Documentation on the **APR-5003V** serial control facilities will be made at a future date for use by independent developers.

Three baud rates are selectable via the DIP switch S1 on the LNT board, the switch functions being specified as follows:

S1-1	Baud Rate Selection
S1-2	Baud Rate Selection
S1-3	Disable Video/Tone referenced operation*
S1-4	Not Assigned
S1-5	Not Assigned
S1-6	Not Assigned
S1-7	Not Assigned
S1-8	Reserved

* The facility provided by S1-3 is for use with those **APR-5003** models manufactured before the introduction of the **APR-5003V** which have been upgraded to accept **APR-5003V** software. This upgrade does not offer video or tone facilities, all synchronous operations being in reference to external Longitudinal Time Code.

DIP Switch Settings

1. Normal Operation at 38.4 kbaud

S1-1	ON	S1-5	ON
S1-2	ON	S1-6	ON
S1-3	ON	S1-7	ON
S1-4	ON	S1-8	ON

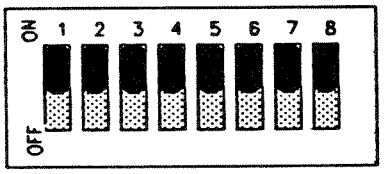

2. Special Operation at 19.2 kbaud

S1-1	OFF	S1-5	ON
S1-2	ON	S1-6	ON
S1-3	ON	S1-7	ON
S1-4	ON	S1-8	ON

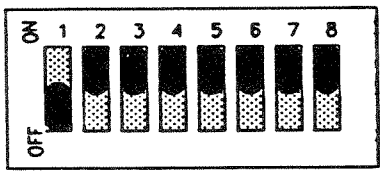

3. Special Operation at 9.6 kbaud

S1-1	ON	S1-5	ON
S1-2	OFF	S1-6	ON
S1-3	ON	S1-7	ON
S1-4	ON	S1-8	ON

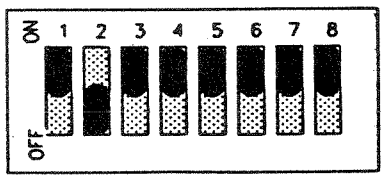

APPENDIX G
GLOSSARY

The following glossary of terms are defined to reflect their use in the **APR-5000** manual.

Alignment — The electronic adjustment of the audio amplifiers and equalization circuitry to conform to specifications.

Azimuth — This is an adjustment of the position of the upper and lower head surfaces relative to the tape entering and leaving the head gap. It performs the phase relationship adjustment on a multiple channel head.

Bias — A high frequency signal that is combined with the audio signal and is recorded on the tape.

Capstan Motor — The capstan motor has a white ceramic shaft which is used to drive the tape in PLAY or RECORD mode. It contains a tachometer which is used for ensuring precise speed.

Captive Screw — These are used on the rear door and on the neck brace assembly. They can be adjusted without tools (with the hands) or with a screwdriver. When they are fully unscrewed, they remain attached to the assembly into which they are screwed.

Center Track Time Code — This is done when a time code data track is inserted between the two tracks of a half track recording. The **APR-5003** is a center track time code machine.

Cue Head — This is another name for the sync head (see "sync head").

De-magnetize — The process of removing stray magnetic flux from the heads. This also referred to as de-gaussing. De-magnetizing of a recorded tape will cause it to be erased.

Dim — The audio output is disconnected (same as mute).

Equalization — The electronic readjustment of the frequency response characteristics of an audio signal (either playback or record). This is generally done to compensate for the irregular frequency response of the playback or record mediums (tape, heads, etc.).

Fast Wind — Whenever the machine is entered into a mode where the tape is shuttled by the reel motors (not the capstan motor). This includes FAST FORWARD, REWIND, SPOOL WIND, LOCATE, and MVC.

Flutter — Describes small variaations of play speed. This fluctuation is measured as a percentage of deviation from standard speed.

Flutter Dampening Arm — This device is mounted between the S-roller and the timer roller. There is a magnetic sensor under the arm which indicates to the computerized tape tension system the position of the arm. Its provides feedback to the supply reel motor which reduces flutter which is caused by motor cogging, out of round tape supply, and improper tape pack.

Full Track Recording — A full track recording is made when one track covers ¼-inch of tape. This can be done with the **APR-5001**.

Half Track Recording — A half track recording is made when two tracks cover ¼-inch of tape. The **APR-5002** can do this in either of the two standard formats: NAB or DIN.

Headstack — The headstack is mounted on the deck. It consists of all the parts mounted to the head block including right and left hand fast guides, all of the heads, the headstack identification code switch, and the headstack connector.

Meter Housing — The portion of the tape machine which contains the audio and time code control/meter boards as well as the monitor speaker assembly. This is mounted on the neck brace assembly.

Monitor — The monitor circuitry in the audio channels provides the signal output at the output connectors on the rear door of the tape machine. The user can select the source of this output from the meter housing.

Nanoweber - A measurement of magnetic flux.

Overbias — Since the level of the bias signal is set so that the high frequency response is attenuated, the process of setting the bias level is often called overbias.

Pinch Roller Puck — The rubber wheel which is used to press the tape against the capstan motor in PLAY or RECORD mode.

Record/Cue Head — This is another name for the sync head (see sync head).

Record/Sync Head — This is another name for the sync head (see sync head).

Reel Motor — The reel motors are used for moving the reels of tape which are mounted on the turntables.

Repro Head — This playback head is specifically designed to receive signals from tape.

Supply Reel — The supply reel is mounted on the left side reel motor. It supplies the tape in forward motion.

Sync Head — This is a multiple purpose head. It can be used for playing back signals or recording them onto tape. Generally this head is not used for playback purposes. However, when it is desired to record one track referencing to the other, it is necessary to do so.

Take-Up Reel — The take-up reel is mounted on the right side reel motor. It takes up the slack tape in forward motion.

Time Code — A digital signal which contains information on hours, minutes, seconds, frames,flag bits, and user bits. It provides a time reference on the magnetic tape for ease in editing purposes.

Tape Pack — The way the tape is deposited into the reel. Ideally, all of the tape on the reel will be evenly centered between the two reel flanges. The best tape pack is achieved in PLAY or SPOOL WIND mode.

Tape Tachometer — The tape tachometer is derived from the magneto-resistive sensor circuity of the Tape Tach Sensor (TTS) board. This is equivalent to a roller guide counter which is used to approximate the tape position and velocity in real time.

Tentelometer — A device used to measure the tension exerted on recording tape.

Transport — The part of the tape machine which is used to handle the tape, shuttling it from one reel to the other and causing it to pass before the heads at a precise velocity for playback or recording.

Wow — Decribes a very slowly changing play speed. This fluctuation can be heard during playback of sustained tones.

SONY®

ANALOG TAPE RECORDER

APR-5003

SUPPLEMENT

This supplement is applicable to APR-5000 Series operation and maintenance manual.

ADDENDUM SHEET

APR-5000 SERIES OPERATION AND MAINTENANCE MANUAL T-9481-766-1

1. START-UP ERROR ROUTINE

In machines with 2TK PROMs P2.01.04.2 or higher, the following start-up error routine is incorporated:

Any failure in start-up diagnostics causes the STOP indicator to flash on and off. As the diagnostic tests are performed, the diagnostic codes are displayed and errors are displayed immediately after the code. Specific failures are displayed in numerical sequence before the LOCATE display is cleared on power-up.

The diagnostic codes, their meanings, and the appropriate corrective actions are listed below.

E.00.1 ROM has failed checksum. Replace the ROM or service the CPU board.

E.00.2 The scratch RAM area has failed read/write test. Replace the RAM or service the CPU board.

E.00.3 The parameter RAM has failed checksum. Replace the RAM or service the CPU board. The locator or user parameter may be incorrect, and, if this error is observed, remove any external connections, such as Time Code or Synchronizer, and retest. External equipment may cause this diagnostic failure. It should be noted that this indication may be normal when the machine is powered up for the first time after PROM replacement.

CAUTION

WHERE A DIAGNOSTIC FAILURE OCCURS, THE MACHINE SHOULD BE USED WITH CAUTION, SINCE ITS OPERATION MAY BE ERRATIC OR UNDEFINED.

2. TAPE TENSION

After power-up or an EOT (end of tape) condition, the APR-5000 series processor defaults to a general purpose tape tension condition. Any small, motor-controlled tape movement allows the processor to derive the necessary information concerning current supply reel and takeup reel radii. This information permits the processor to optimize tape handling, particularly in the area of start-up performance.

In instances where start time is not critical this need be of no concern, since the radius information will be established very quickly through any subsequent commanded tape movement.

In the stopped condition, the establishment of valid radii can be verified by simply touching the MVC wheel without moving it from the center detent. If the MVC indicator becomes illuminated when the wheel is touched, then valid radii have been established. If the indicator does not become illuminated when the wheel is touched, then some tape movement is necessary to establish optimum start-up performance. This is most easily accomplished by setting the MVC wheel to either end of its travel range, and holding it until the indicator becomes illuminated. The tape position then can be set in advance of the desired start-up point.

TABLE OF CONTENTS

PREFACE 1

SECTION 1 INTRODUCTION 1-1

1.1 GENERAL 1-1
1.2 TIME CODE 1-1
1.2.1 Time Reference Precision 1-1
1.2.2 Interchangeability 1-1
1.2.3 Ease of Synchronization 1-1
1.3 TIME CODE FORMATS 1-1
1.4 APR-5003 TIME CODE FEATURES 1-1
1.4.1 Time Code Readers 1-2
1.4.2 Time Code Outputs 1-2
1.4.3 Internal Operation 1-2
1.4.4 External Operation 1-2
1.4.5 Synchronizer 1-4
1.4.5.1 Master/Slave CHASE Operation 1-4
1.4.5.2 Offset Lock in CHASE Mode 1-4
1.5 SPECIFICATIONS 1-6

SECTION 2 OPERATION 2-1

2.1 INTRODUCTION 2-1
2.2 CONTROLS AND INDICATORS 2-1
2.2.1 Transport Control Panel 2-1
2.2.2 Alignment Control Panel 2-2
2.2.3 Meter Housing 2-3
2.3 INPUTS AND OUTPUTS 2-3
2.3.1 TIME CODE Connectors 2-3
2.3.2 CH 3 Connectors 2-3
2.3.3 Output Signals 2-4
2.3.4 Input Signals 2-4
2.4 PARAMETER SELECTION 2-4
2.4.1 CHASE Mode Frame Offset (Memory Location 00) 2-4
2.4.2 Automatic Time Code (Memory Location 30) 2-5
2.4.3 EBU/SMPTE Selection (Memory Location 31) 2-5
2.4.4 DF/NDF Selection (Memory Location 32) 2-5
2.4.5 CHASE Disable/Enable (Memory Location 33) 2-5
2.4.6 Wind Speed Limit (Memory Location 36) 2-5
2.5 DUPLICATING TIME CODES 2-5
2.6 CHASE MODE 2-5
2.6.1 PARK 2-6
2.6.2 Establishing Pre-roll 2-6
2.6.3 Indications 2-6
2.6.4 Effect of Cancelling CHASE 2-6

SECTION 3 TIME CODE STANDARDS 3-1

3.1 INTRODUCTION 3-1
3.2 LONGITUDINAL TIME CODE 3-1
3.2.1 Bit Values and Coding 3-1
3.2.2 Time Code Bit Assignments 3-2
3.2.3 Synchronization Word 3-2

Table of Contents
(Continued)

3.2.4 Drop Frame Bit 3-2
3.2.5 Color Frame Bit 3-2
3.2.6 User Bits 3-2

SECTION 4 ALIGNMENT 4-1

4.1 INTRODUCTION 4-1
4.2 TEST EQUIPMENT 4-1
4.3 ALIGNMENT PROCEDURES 4-1
4.3.1 Head Position Adjustment 4-1
4.3.2 Tape Lifter Adjustment 4-2
4.3.3 Time Code Channel Alignments 4-3
4.3.3.1 Time Code Output and VU Meter 4-3
4.3.3.2 TRK 3 Presets 4-4
4.3.3.3 Sync Level Adjustments 4-4
4.3.4 Record Level Adjustments 4-4
4.3.5 High Speed Reader Test 4-5
4.3.6 Time Code Head Block Longitudinal Offset 4-5
4.3.7 CHASE Mode Verification 4-6
4.4 TIME CODE CHECKOUT TAPE FABRICATION 4-8

LIST OF ILLUSTRATIONS

Number	Title	Page
Figure 1-1	Time Code Longitudinal Offset (Recording)	1-3
Figure 1-2	Time Code Longitudinal Offset (Normal Playback)	1-3
Figure 1-3	Time Code Longitudinal Offset (Synchronous Playback)	1-3
Figure 1-4	Chase Mode Connections	1-5
Figure 2-1	Transport Control Panel	2-2
Figure 2-2	TC Control/Indicator	2-2
Figure 2-3	Meter Housing	2-3
Figure 2-4	Time Code Input and Output Connectors	2-3
Figure 3-1	Time Code Signal Format	3-1
Figure 4-1	Time Code Head Height	4-1
Figure 4-2	Tape Lifter Adjustment	4-3
Figure 4-3	Longitudinal Offset Test Connections	4-6
Figure 4-4	Ink Distribution on Head Surface	4-6
Figure 4-5	Ink Wear Patterns	4-7
Figure 4-6	CHASE Mode Verification Connections	4-7

LIST OF TABLES

Table 2-1	TAPE TIME Displays	2-1
Table 2-2	Time Code Parameter Suimmary	2-4
Table 2-3	Wind Speed Limits	2-5
Table 3-1	Time Code Bit Assignments	3-2
Table 4-1	Track 3 Presets	4-4

SECTION 1
INTRODUCTION

1.1 GENERAL

The APR-5003 Tape Recorder/Reproducer differs from other machines in the APR-5000 Series in that it has provision for recording a third (center) track. The primary purpose of the third track is to record Time Code signals, these being used to provide frame-accurate reference points throughout the length of the tape.

1.2 TIME CODE

Time Code is a digitally derived signal which is recorded on the third track. Time Codes originally were standardized by the Society of Motion Picture and Television Engineers (SMPTE) for use in videotape editing, and they provide a unique identifying address for each frame on the tape. These addresses are expressed in terms of hours, minutes, seconds and frames, and usually are written in the general form HH:MM:SS:FF.

Time Code, whether used for video or other applications, offers the most efficient of all currently available methods of tape editing. In addition to speeding up the editing process, Time Code also provides an extremely accurate method of locating any point on the tape. Further, when under control from a computer, edit points can be identified with Time Code addresses and compiled in memory as edit lists. These can be retrieved later to perform automatic editing.

The major advantages of using Time Codes are described in paragraphs 1.2.1 through 1.2.3 below.

1.2.1 Time Reference Precision

The length of any program interval can be determined to within a fraction of a second (1/30th or 1/25th depending upon Time Code format). This allows a schedule to be blocked out while the program is being recorded so that post-production editing can be carried out with minimum search time.

1.2.2 Interchangeability

The edit in and edit out points selected on one system can be listed, in accordance with their Time Codes, for input to any other system. This allows edits carried out on a remote second system to exactly duplicate those selected on the first system.

1.2.3 Ease of Synchronization

The Time Code provides divisions on magnetic tape similar to those provided by sprocket holes on film. These divisions allow an editing system or synchronization unit to bring any number of tapes into synchronization automatically, offering perfect frame to frame match-up at the edit points.

1.3 TIME CODE FORMATS

The Time Code signal can be in any one of three formats, namely SMPTE non-drop frame (NDF) code, SMPTE drop frame (DF) code and EBU code. The different codes are intended for use in particular video applications, as described below, but any one of them can be used for audio recording applications.

The SMPTE DF code is used in applications associated with color videotapes made at the frame rate of 29.97 frames per second (Fr/s) in accordance with NTSC (National Television Standards Committee) color television standards.

The SMPTE NDF code is used in applications associated with monochrome videotapes made at frame rate of 30 Fr/s.

The EBU code is used in applications associated with videotapes made, in accordance with European standards, at frame rate of 25 Fr/s.

All of the Time Code formats are based on a data stream driven at the frame rate, and each contains a special data block known as the sync word. Occurring once per frame, the sync word denotes the frame ending, and also can be used to determine the direction of tape movement.

For more detailed information on Time Code signal formats, refer to Section 3 of this Supplement.

1.4 APR-5003 TIME CODE FEATURES

The APR-5003 has full provisions for generating and reading Time Code. In addition to generating and reading internal Time Code, the system can accept Time Code from an external source, and also can provide longitudinally corrected Time Code to an exter-

nal device. All readers and generators have SMPTE (DF and NDF) and EBU code capability.

The system also is equipped with an internal synchronizer which allows it to be time-locked to a second machine, making possible the CHASE mode of operation.

1.4.1 Time Code Readers

The APR-5003 incorporates two reader channels, one dedicated to external Time Code, and the other dedicated to playback. Both readers can decipher any of the longitudinal Time Code formats, the required format being selected as required. Alternatively, the machine can be programmed for automatic Time Code selection.

A high speed interpolator is provided as an adjunct to the external reader channel. This uses synchronization pulses to determine tape direction and position information from a high speed Time Code source. These signals are used in the CHASE Mode of operation.

1.4.2 Time Code Outputs

As with the Time Code readers, two output channels are incorporated in the machine, one being dedicated to providing longitudinally corrected Time Code from tape, and the other being used for internal recording operations.

The internal Recording Generator is used primarily for alignment and checkout of the Time Code channel operations. It also functions as a regenerator when an external Time Code is being recorded, deriving its clock from the external signal, and longitudinally offsetting the Time Code.

It is most important to note that internal and external recording operations must NEVER be performed simultaneously, since this will result in a longitudinal offset between the recorded Time Codes.

1.4.3 Internal Operation

For internal machine operations, the generator timing is derived from the CPU clock, and is not related to any external events. The generator starts when the Time Code channel is set into RECORD and normally begins from the time shown on the TAPE TIME display.

1.4.4 External Operation

When an external Time Code is being recorded, the incoming signal is received by the external reader and passed via software to the Recording Generator. The purpose of the software is to introduce the longitudinal offset, i.e. to compensate for the time shift caused by head placement.

Because of the need to play back Time Code tapes that have been recorded on different machines (whose head spacings can vary widely), it is essential that the Time Code track and the corresponding program tracks be recorded in such a manner that the Time Code and the program material are recorded with identical longitudinal positioning on the tracks. This is accomplished by introducing a longitudinal offset.

Longitudinal offset is used to compensate for the distances between the Time Code, recording, and repro heads. When program material is recorded on a tape striped with Time Code, the program material appears on the tape at a point which is longitudinally displaced from the Time Code reference by a distance equal to the spacing between the Time Code head and the recording head. When the tape is played back in the normal mode, the Time Code reference is in error, because the distance between the Time Code head and the repro head differs from that between the Time Code head and the recording head. If the tape be played back on a different machine, whose head spacings could be quite different, this problem is compounded further. To overcome this, the longitudinal offset is introduced.

To illustrate the method used to achieve the required offset, it is convenient to assume that Time Code is recorded on the program track simultaneously with the dedicated Time Code Track. This convention allows the relationship between the two tracks to be more clearly seen.

NOTE: The longitudinal offsets illustrated in Figures 1-1, 1-2 and 1-3 are shown for explanatory purposes only. The actual offsets used in the APR-5003 do not fall on these specific frame boundaries.

Figure 1-1 is a conceptual illustration of the physical arrangement of the various heads, together with the program and Time Code tape tracks. As Time Code frame N+2 arrives at the Time Code input, it is passed directly to the record head and recorded on the program track. At the same time, Time Code frame N+2 is passed through the processor and advanced by two frames, thereby producing future Time Code frame N+4. This signal is impressed upon the Time Code record head and recorded on the Time Code track.

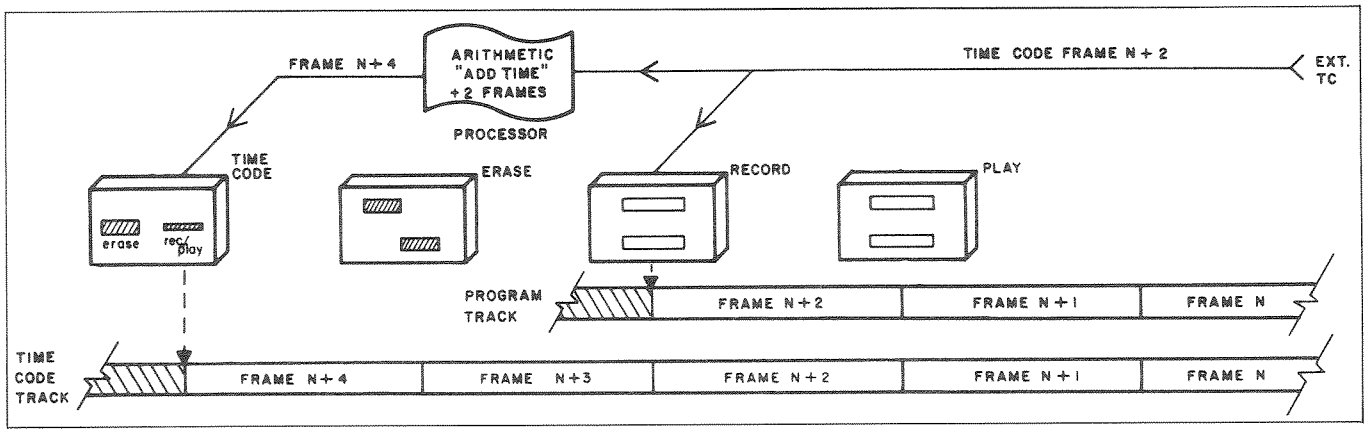

Figure 1-1. Time Code Logitudinal Offset (Recording)

The illustrated track sections show the condition that exists just after frame N+2 has been recorded on the program track. As frame N+2 was recorded on the program track, the future Time Code N+4 was recorded on the Time Code track, frames N+2 and N+3 on this track having been recorded as future Time Codes while frames N and N+1 were being recorded on the program track. As can be seen, this results in similar Time Code frames being recorded at the same longitudinal position on the tape.

The reverse process is performed when playing back tapes striped with Time Code. This is illustrated in Figure 1-2. It should be noted that, in playback mode, the processor delays the Time Code. Further, in normal playback mode, the processor retards the Time Code by a factor of three frames rather than two, because of the different placement of the playback head in relation to the Time Code head.

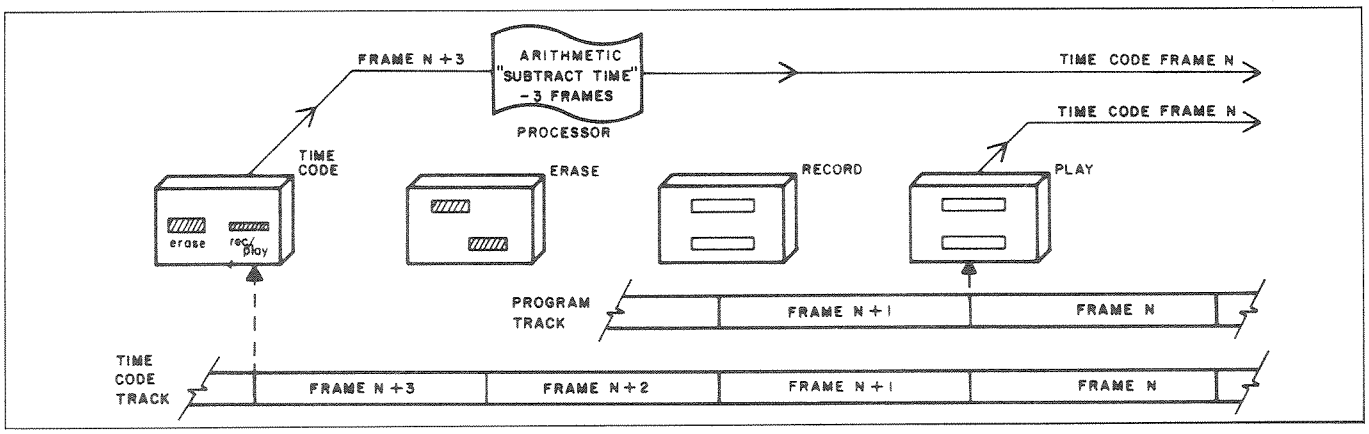

Figure 1-2. Time Code Longitudinal Offset (Normal Playback)

In the synchronous playback mode, when playback is derived from the recording head, the longitudinal offset is made in accordance with the position of that head, and the correction factor is −2, reversing the +2 factor used when recording. This is illustrated in Figure 1-3.

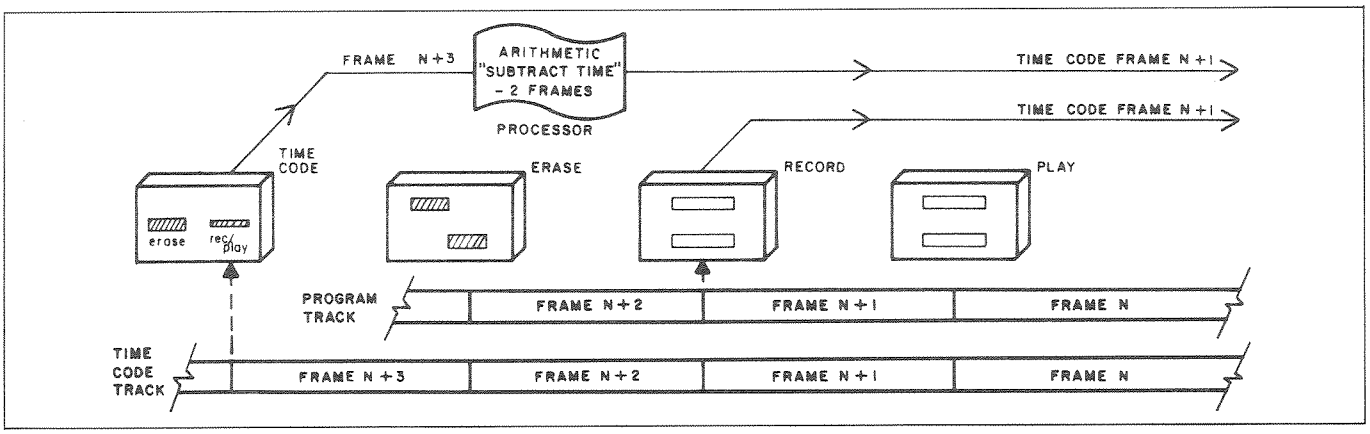

Figure 1-3. Time Code Longitudinal Offset (Synchronous Playback)

The requisite longitudinal offset compensation factors are defined by the physical placement of the record, repro, and Time Code heads, and are not user-adjustable. The offset arithmetic is fixed by firmware, and is adjusted automatically by the machine in accordance with tape speed.

1.4.5 Synchronizer

For CHASE Mode operation, the internal synchronizer is used to slave the APR-5003 to a Master machine. Synchronization can be performed with or without frame offsets, as required.

The APR-5003 can serve as either Master or Slave. When acting as Master, the Time Code signal from the TIME CODE OUT connector provides the reference for the Slave. As the Slave, the external Time Code from the Master is inserted at the TIME CODE IN connector.

In the CHASE Mode, the Slave machine echoes the Master's Time Code on its output. In modes other than CHASE, the Slave provides longitudinally corrected Time Code.

1.4.5.1 Master/Slave CHASE Synchronization

Where two tapes are striped with the same type of Time Code and played on two separate machines, the synchronizer can lock together the Time Code signals from the two tapes, causing them to run at identical speeds, and thereby slaving the two machines together. In this mode (CHASE), the machine providing the Time Code source is called the Master, and the following machine is called the Slave (see Figure 1-4). No external video reference is required for CHASE mode operations.

In CHASE Mode, synchronization can be accomplished with a Master Time Code source with confidence that any reasonable level of flutter which may be present in the Master will not be transmitted to the APR-5003. The following preconditions must be met to ensure proper operation:

1. The Master Time Code signal must be continuous and sequential, OR
2. Any Master Time Code discontinuity must be matched by an identical discontinuity in the APR-5003 Time Code. Where matched discontinuities are allowed, offsets cannot be requested. (See paragraph 1.4.5.2.)
3. No dropouts in the Master Time Code may exceed two seconds duration.

In order to maintain the Master/Slave lock requirement for CHASE Mode, certain limits are applicable to the relative Master and Slave tape speeds. For CHASE operation, both Master and Slave machine speeds must be set so that their Time Codes play back at their correct nominal speeds. For instance, if the Time Code on the Master tape was recorded at 15 IPS, and the Time Code on the Slave tape was recorded at 30 IPS, the Master and Slave machine speeds should be set at 15 IPS and 30 IPS respectively.

If Master is set to FAST FORWARD, MVC, REWIND, or any other high speed mode, the Slave attempts to follow at high speed, and subsequently re-synchronizes when it once again receives a reasonable real time Time Code. For further details of the synchronization limits, refer to the specifications given in paragraph 1.5.

1.4.5.2 Offset Lock in CHASE Mode

In many instances, it is required to synchronize two tapes on which the time relationships between the Time Code and program tracks are not the same, i.e. the program material starts at one Time Code on the first tape, and at a different Time Code on the second. In this situation, an offset value must be added to or subtracted from the Slave Time Code so as to compensate for the differences. The APR-5003 has provisions for such offsets to be implemented.

The CHASE Mode offset may be described as an advance or a retardation of the Slave Time Code in relation to the Master Time Code. Where it is required that the Master Time Code should lead the Slave Time Code, a negative offset value is entered at the Slave machine. For example, assuming that the Master Time Code is required to lead the Slave Time Code, by three minutes, an offset of −3:00:00 is entered at the Slave machine. With this offset entered, the Slave follows the Master in such a manner that the Master Time Code indication is always 00:03:00:00 greater than the Slave Time Code indication.

In the case where it is required that the Slave lead the Master by three minutes, a positive offset of 3:00:00 is entered at the Slave machine, causing the Slave Time Code indication to be always 00:03:00:00 greater than the Master Time Code indication.

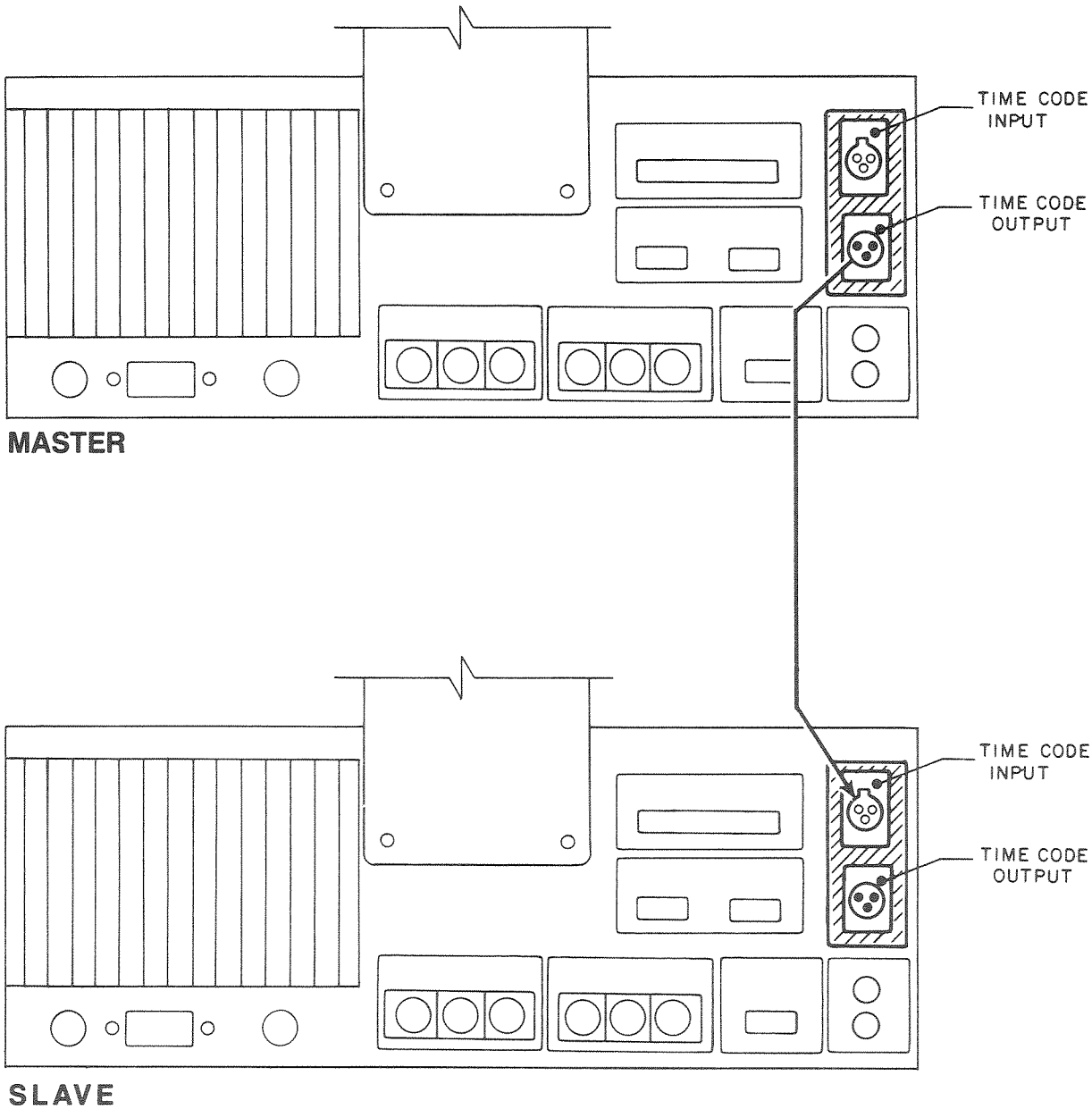

NOTES:

1. Slave machine is set to CHASE mode
2. Master can be any device with Logitudinal Time Code Output

Figure 1-4. CHASE Mode Connections

1.5 SPECIFICATIONS

GENERAL:

IEC center Time Code track width	0.36 mm
Nominal Time Code recording level	700 nWB/m (equivalent to 250 nWB/m measured RMS)

CROSSTALK TO AUDIO:

Residual Time Code on audio tracks	Less than 85 dB at 15 IPS

TAPE TACHOMETER:

Relationship to Time Code	16 pulses/frame SMPTE (at 30 IPS) 19.2 pulses/frame EBU (at 30 IPS)

TIME CODE READING CHARACTERISTICS:*

External Time Code (FWD or REV)	
Min guaranteed reading range (in PLAY mode)	±50% of nominal speed
Interpolated reading range**	Up to transport limit speed
Readable range lower limit	0.05 times nominal speed
Readable range upper limit	70 times nominal speed
Internal Time Code (FWD or REV)	
Min guaranteed reading range	+50% of nominal speed
Interpolated reading range**	Up to transport limit speed

*Specified performance assumes ideal Time Code integrity

**Interpolation reading on external Time Code is performed by means of Sync word detection, and interpolation reading of internal Time Code relies upon roller guide information.

TIME CODE INPUT/OUTPUT:

Balanced Input	
Min level	0.6 V differential p-p
Max level	20 V differential p-p
Common mode rejection	10 V p-p (10 Hz to 100 kHz)
Unbalanced Input	
Min level	0.6 V differential p-p
Max level	20 V differential p-p
Differential analog output (CNX, JU1 & JU3 installed)	
Balanced 600 Ohm load	
Max level	7.5 V differential p-p
Nominal level	4.0 V differential p-p
Unbalanced analog output	
Max level	7.5 V differential p-p
Nominal level	4.0 V differential p-p
RS422 type output (CNX, JU2 and JU4 installed)	
Max "0" level	4.0 V differential p-p
Min "1" level	6V differential p-p

(No damage will result to the above outputs if they become shorted to ground)

OUTPUT SIGNAL SELECTION:

CHASE Mode	Buffered input Time Code
Non-CHASE Mode	
Throughout forward Time Code data reading range (in PLAY mode)	Longitudinally corrected Time Code from tape ± 1/40th frame
Outside Time Code data reading range and in non-PLAY modes	Wide bandwidth Time Code from tape
Recording Generator accuracy	±0.005% SMPTE NDF, EBU
Synchronization accuracy	Less than ±50 uSec at nominal speed

Wind speed limit (Available in TC DISPLAY mode. May be defeated through storage register # 36)

30 IPS	No limit imposed other than max motor rpm (approximately 9 x nominal speed)
15 IPS	225 IPS limit (15 x nominal speed)
7.5 IPS	112.5 IPS limit (15 x nom. speed)

SECTION 2
OPERATION

2.1 INTRODUCTION

This section provides operational information applicable to the APR-5003 system. It includes descriptions of the pertinent controls and indicators, inputs and outputs, basic operations, and other similar information.

For details of the standard APR-5000 Series operations, refer to Sections 4 and 5 of the APR-5000 Series Operation and Maintenance Manual.

2.2 CONTROLS AND INDICATORS

Controls and indicators pertinent to Time Code operations are located in three places: the Transport Control Panel, the Alignment Control Panel, and the Meter Housing. The functions of the various controls are listed in paragraphs 2.2.1 through 2.2.3 below.

2.2.1 Transport Control Panel

Those controls and indicators that are mounted on the Transport Control Panel are illustrated in Figure 2-1. Their functions are as follows:

- **Time Code Display** — Key/Indicator: The key causes the playback Time Code to be displayed on the TAPE TIME indicator. The indicator illuminates when that Time Code is being displayed.

- **TC GEN** — Key/Indicator: The key is used to select internal or external Time Code. The indicator illuminates when the internal Time Code Record Generator is selected for recording.

- **CHASE** — Key/Indicator: The key selects CHASE mode in which the APR-5003 is slaved to a second machine or vice versa. The indicator illuminates when CHASE is selected.

- **LOCATE TIME** — Numeric Display: Indicates the locate target Time Code in HH:MM:SS:FF format, except when:

  1. CHASE Mode is first selected. At this time, the frame offset stored in memory location 00 is displayed. (See paragraph 2.4, Parameter Selection.)

  2. Machine is placed in Vari-Speed program mode. This causes the speed variation percentage to be displayed.

  3. Executing STO (store) or RCL (recall) for non- parameter storage locations. The display then shows the addressed memory location.

- **TAPE TIME** — Numeric Display: Is used to indicate time in the HH:MM:SS:FF format when TC Display is selected. The displayed Time Codes depend upon Time Code source and current mode, as shown in Table 2-1. The frame digits will flash should the interpolated Time Code lose the reference established by a valid Time Code read. A "tape break" condition constitutes a loss of reference. However, it should be noted that the flashing indication is not provided in the TC REC READY mode.

  In the CHASE mode, the M and S decimal points become illuminated to indicate Time Code validity for the Master and Slave respectively.

- **Numeric Keypad** — Ten-key pad containing numeric keys 0 through 9 plus RCL (Recall), STO (Store) and +/− keys: Is used to enter parameters for Time Code operations.

MODE	DISPLAYED TIME CODE	
	INTERNAL TC SOURCE	EXTERNAL TC SOURCE
STOP	TC generator start time or most recent playback TC	External generator TC
PLAY	Playback TC or -- -- -- --	Playback TC or -- -- -- --
FAST MVC	TC from tape transport timer	TC from tape transport timer
TC RECORD	Internal generator TC	External generator TC

TABLE 2-1. TAPE TIME Displays

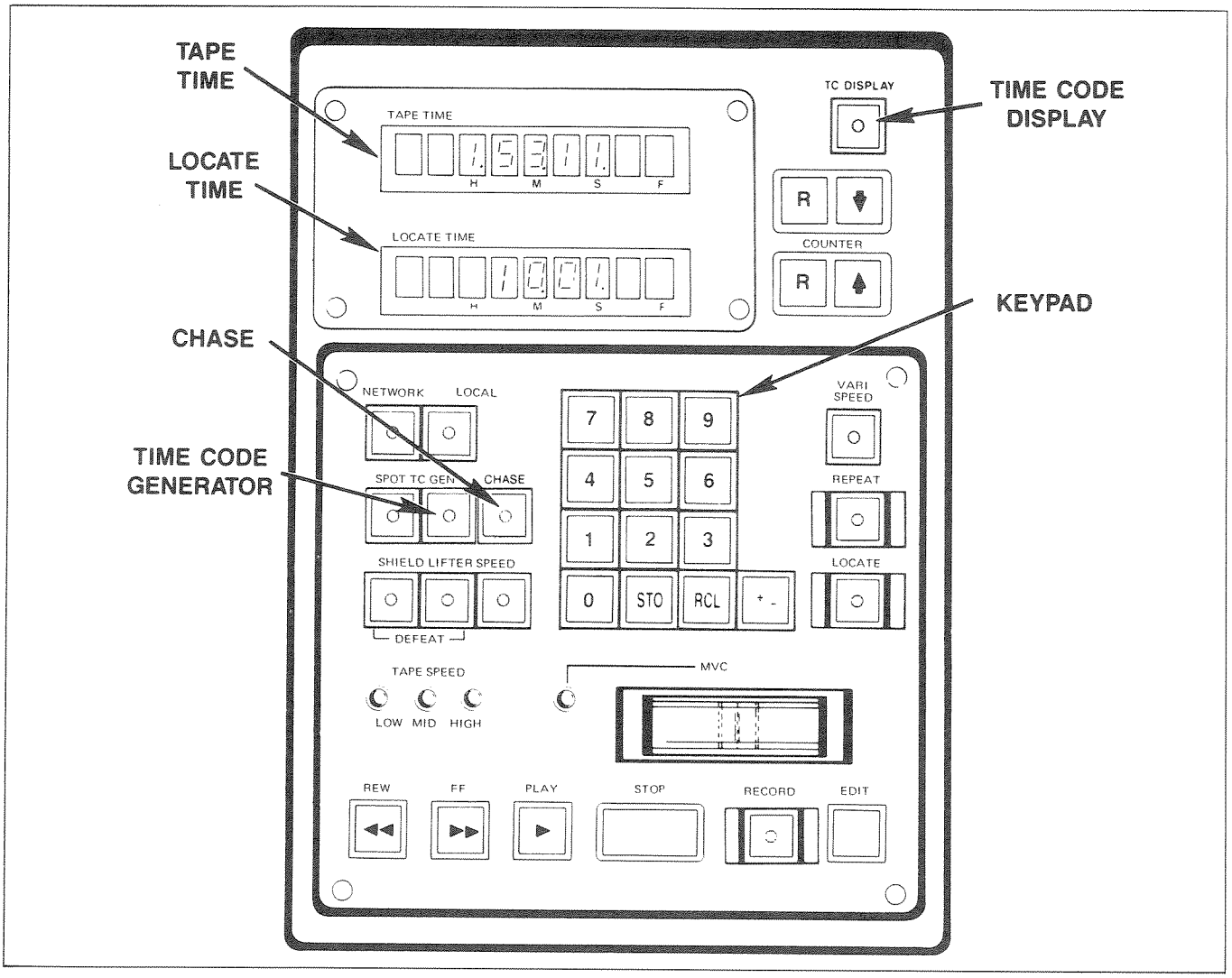

Figure 2-1. Transport Control Panel

2.2.2 Alignment Control Panel

Only one of the controls pertinent to Time Code operations is located on the Alignment Control Panel, namely the TC Control/Indicator in the EQ STD (Equalization Standards) section (see Figure 2-2). The TC control is used to select that special equalization standard which is best suited for digital data transmissions.

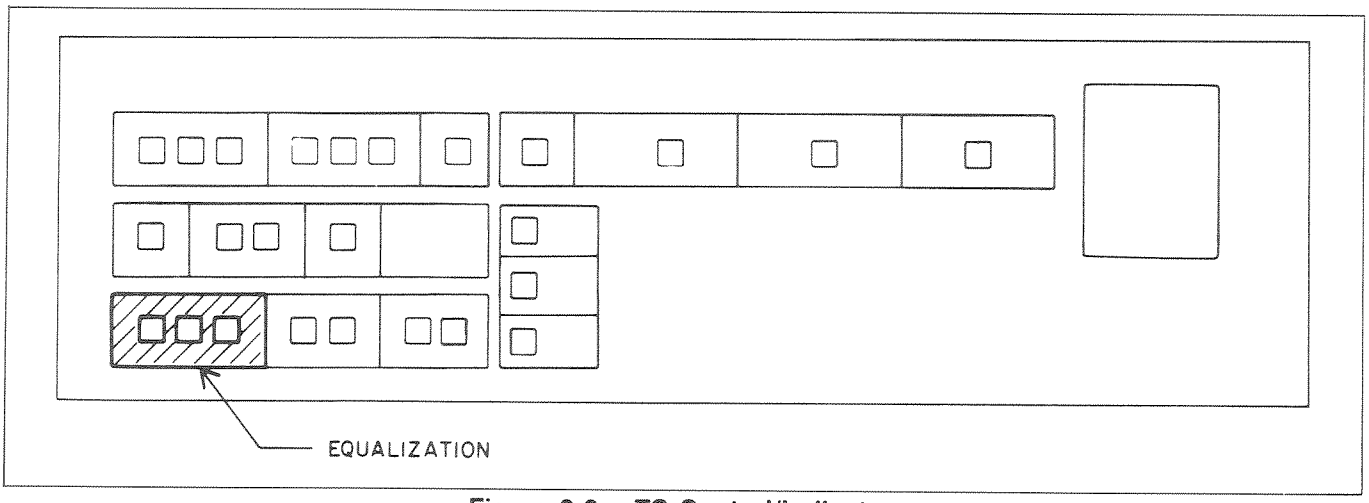

Figure 2-2. TC Control/Indicator

2.2.3 Meter Housing

One control/indicator and three LED indicators are located directly below the Time Code VU meter on the Meter Housing (Figure 2-3). These are described below.

- **ALN SELECTED** — LED Indicator (amber): Illuminates when a Time Code channel has been selected during an alignment procedure.
- **RECORD BIAS** — LED Indicator (red): Illuminates when the BIAS signal is active.
- **RECORD ERASE** — LED Indicator (red): Illuminates when the ERASE signal is active.
- **RECORD READY** — Key/Indicator: the key selects the RECORD READY mode, and the indicator becomes illuminated when that mode is selected.

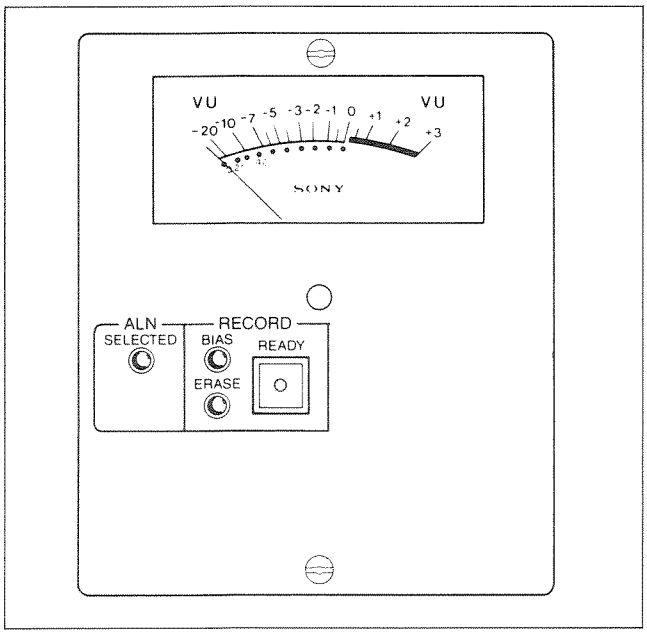

Figure 2-3. Meter Housing

NOTE: Time Code recordings made on the **SONY APR-2003** Analog Tape Recorder are at a higher signal level than those made on **APR-5003.** As a result, when **APR-2003** recordings are reproduced on the **APR-5003**, the VU meter tends to go beyond full-scale deflection. However, this is not detrimental to equipment operation, and need be of no concern to the operator.

2.3 Inputs and Outputs

Two connector pairs are provided for Time Code inputs and outputs, these being labelled TIME CODE IN, TIME CODE OUT, INPUT CH 3 and OUTPUT CH 3. These connectors are located on the rear panel of the machine, and are illustrated in Figure 2-4.

2.3.1 TIME CODE Connectors

The signal on the TIME CODE OUT connector is a real time signal, i.e. is longitudinally offset. This offset also is provided within the machine for signals input to the TIME CODE IN connector.

2.3.2 CH 3 Connectors

The INPUT CH 3 and OUTPUT CH 3 connectors provide direct access to the center track audio channel. The Time Code signals at these connectors are not processed, nor are they longitudinally offset. The primary purpose of these connectors is to serve as monitor points for the Time Code signals.

If so desired, signals other than Time Code can be recorded on the center track. To implement this facility, connector CNP-453 MUST be disconnected from the Connector (CNX) board. Access to the audio channel then can be made via the CH 3 connectors.

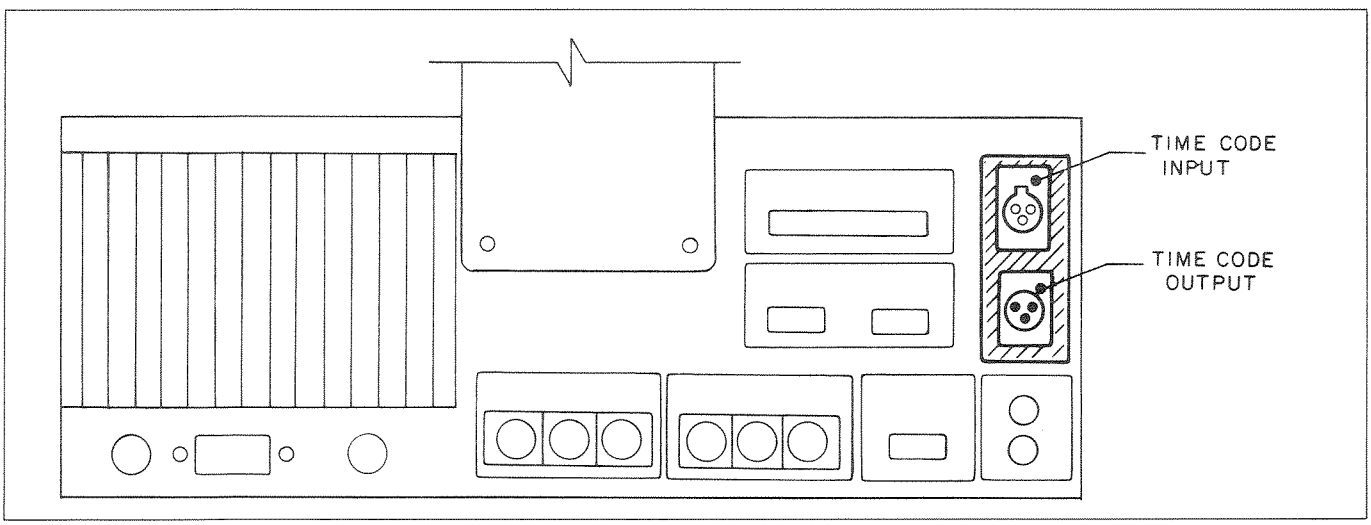

Figure 2-4. Time Code Input and Output Connectors

2.3.3 Output Signals

Time Code outputs are available as standard RS-422 signals or as differential analog signals. Selection of the desired standard is made by means of jumpers on the CNX board. Where an RS-422 output is required, jumpers JU 2 and JU 4 are installed. For differential analog output signals, jumpers JU 1 and JU 3 are installed.

The RS-422 signal is derived from a line driver whose output impedance is 60 ohms. This is a differential signal, and cannot be connected as a single-ended output.

The differential analog signal is derived from a differential line output (DLO) device which is provided with level and balance controls, and whose output impedance is 120 ohms. Either side of the DLO can be tied to ground without loss of signal amplitude, and this characteristic permits a single-ended output connection.

2.3.4 Input Signals

The TIME CODE IN connector accepts both RS-422 and processed signals, either balanced or single-ended. Since the Time Code is insensitive to phase reversal, the single-ended signal can be connected to either the high side (pin 2) or the low side (pin 3). However, it should be noted that the unused line must be connected to shield (pin 1) to ensure correct operation.

2.4 PARAMETER SELECTION

For Time Code operations, five operational parameters are required to be set. In addition, the CHASE mode frame offset may be adjusted as described in paragraph 2.4.1. The operational Parameters are described in paragraphs 2.4.2 through 2.4.6, and summarized in Table 2-2.

Entered parameters are not lost when power is removed from the machine. At next power-up, the previously entered parameters are re-established automatically.

The Operational Parameters are set by entering values into specific memory locations. The value entered for each Operational Parameter is either a one or a zero, these signifying a desired ON or OFF condition for the parameter.

Operational Parameter entries are made on the numeric keypad section of the Transport Control Panel. The method of entry differs from the standard store so as to preclude inadvertent changes in these Operational Parameters. To enter a parameter, the following procedure is used:

1. Press RCL .
2. Type the Memory Location number — the current parameter value in the selected location is displayed on the LOCATE TIME indicator.
3. Type the desired parameter value on the numeric keypad.
4. Press STO .

It should be noted that the Operational Parameter value is displayed for one minute only, and that the new value must be entered during this period. If it is desired to erase the display without entering a new value, this is done by pressing the LOCATE TIME reset switch.

MEMORY LOCATION	OPERATIONAL PARAMETER
30	Automatic Time Code OFF (0) or ON (1)
31	EBU (1) or SMPTE (0) selection
32	Drop frame (1) or Non-drop Frame (0) Selection
33	CHASE Disable (1) or Enable (0)
34	Reserved
35	Reserved
36	Wind Speed Limit for High Speed Reader

Table 2-2. Time Code Parameter Summary

2.4.1 CHASE Mode Frame Offset (Memory Location 00)

In CHASE Mode, in which the APR-5003 follows the Time Code from a Master machine, provision is made for offsetting so that either Slave is ahead of Master of Master is ahead of Slave. The offset must be entered as a valid time, a positive time being entered to set Slave ahead, or a negative time being entered to set Master ahead.

The required offset time is determined by cueing up the tapes to the desired program points and then reading the Time Codes at those points.

The following procedure is used to enter the offset:

1. Reset the LOCATE TIME display
2. Enter the desired offset time (HH:MM:SS:FF) on the keyboard (Press +/- if a negative time is required)
3. Press STO on the keyboard
4. Press 0 0 on the keyboard

The entered offset is displayed (with sign if negative) on the LOCATE TIME display.

2.4.2 Automatic Time Code (Memory Location 30)

Automatic Time Code is turned ON or OFF by storing either a zero (OFF) or a one (ON) in memory location 30. With Automatic Time Code ON, the machine automatically determines the Time Code format. Time Code determined in this manner automatically changes the parameters entered in memory locations 31 and 32 (see paragraphs 2.4.3 and 2.4.4).

2.4.3 EBU/SMPTE Selection (Memory Location 31)

The required Time Code format is entered into memory location 31, a zero being entered for SMPTE, or a one being entered for EBU. It should be noted that where SMPTE is selected, a further entry, selecting DF or NDF, may be entered into memory location 32. The EBU/SMPTE parameter is set automatically for SMPTE when a one (drop frame) is entered in memory location 32 (see paragraph 2.4.4).

2.4.4 DF/NDF Selection (Memory Location 32)

This parameter selection is valid only for SMPTE Time Code operation. An entered "1" selects drop frame code, while a "0" entry selects non-drop frame code.

If memory location 31 is subsequently set for EBU format, memory location 32 will be automatically cleared to zero (non-drop code).

2.4.5 CHASE Disable/Enable (Memory Location 33)

The CHASE control on the Transport Control Panel is enabled "0" or disabled "1" by this parameter selection.

2.4.6 Wind Speed Limit (Memory Location 36)

This parameter is used to limit the fast wind speed in MID (15 IPS) and LOW (7.5 IPS) ranges so as to allow for reliable performance of an external high speed reader in all modes of operation. When a one is entered into memory location 36, the wind speeds are limited to those levels shown in Table 2-3. Normal wind speeds prevail when a zero is entered.

TAPE SPEED	FAST SPEED
7.5 IPS	112 IPS
15 IPS	225 IPS
30 IPS	275 IPS (normal maximum speed)

Table 2-3. Wind Speed Limits

2.5 DUPLICATING TIME CODES

Since each new generation track made by audio copying methods is subject to signal deterioration, and poor quality recording on the center track can lead to misreading of the Time Code, duplicating Time Code tracks by means of audio copying is inadvisable. Because of this, the design of the APR-5003 is such as to mandate against audio copying of Time Code tracks.

To duplicate a Time Code track, the master track should be played back on a second machine whose Time Code output is coupled to the TIME CODE IN connector on the APR-5003. The APR-5003 then reads the incoming Time Code and generates a new signal for recording on its own Time Code track.

2.6 CHASE MODE

For many CHASE operations, it is recommended that the APR-5003 be supplied with an external Time Code and have Time Code recorded on its center track. In addition, the following parameters must be established.

- Time Code Format (or automatic selection)
- CHASE Mode enabled
- Frame offset (where required)
- Network Disabled (see APR-5000 Operation and Maintenance Manual)

When these preconditions have been met, CHASE is pressed to enter the mode. When CHASE is first pressed, its indicator flashes on and off, showing that the mode is selected but that the machines are not yet locked. The indicator illuminates solidly when lock is attained.

It should be noted that VARISPEED mode is disallowed in CHASE and TIME CODE RECORD operations. VARISPEED is cancelled automatically as soon as either one of these modes is selected.

2.6.1 PARK

Before entering CHASE Mode, it is sometimes desirable to set up the tapes on the Master and Slave machines to positions such that both machines are sure to enter synchronism at, or before, some specific time on the Master Time Code track. This is sometimes referred to as "parking" the machines.

Where it is required to park the machines before synchronizing them, the Master is first cued to a pre-roll point earlier than the time at which synchronism is desired. The pre-roll is provided to allow a "run up" time for the Slave to synchronize to Master. The required pre-roll time varies from installation to installation, being dependent on the Master device's starting ballistics and the nominal fixed tape speed. A method of determining a suitable pre-roll time for any installation is given in paragraph 2.6.2.

As the Master is played to the pre-roll point, the Slave (in CHASE Mode) follows Master and is brought up to approximately the same Time Code. When the Master is started after this set-up, Slave has sufficient time to lock to Master and settle down before the required lock position is reached.

2.6.2 Establishing Pre-roll

To establish a suitable pre-roll time for any given installation, the following procedure can be used:

1. Run both machines in CHASE Mode, and ensure that they are fully synchronized
2. Stop the Master machine, and allow the Slave to stop and position itself on the last received Master Time Code
3. Using a stop watch, or other suitable timer, set the Master to PLAY and note the time required for the slave to fully lock to the Master
4. Add 20% to the time noted in step 4. The result provides a reasonably reliable pre-roll time for the installation

2.6.3 Indications

When CHASE Mode is first selected, the Synchronizer Frame Offset value (memory location 00) is shown on the LOCATE TIME numeric display. This provides the user with the opportunity to verify the offset value before continuing with the CHASE Operation.

In most circumstances, the TAPE TIME numeric display shows the internal playback Time Code. The exception to this is where the machine is in STOP Mode, when the displayed Time Code depends upon which Time Code source was selected before entering CHASE Mode. If the previously selected Time Code source were external, the most recent internal Time Code is displayed. This feature is most useful during initial setup.

2.6.4 Effect of Cancelling CHASE

Should the CHASE Mode be cancelled after lock is attained, the machine continues to play at the speed which prevailed at the time CHASE was cancelled.

SECTION 3
TIME CODE STANDARDS

3.1 INTRODUCTION

Before the advent of the SMPTE/EBU Time code, the methods used for keeping track of specific points on audio or video tape were many and varied, each method having its own advantages and drawbacks.

In 1969, the SMPTE Time Code standard was established by the Society of Motion Picture and Television Engineers, and has virtually superseded all of the previous hit-or-miss electronic editing systems. This standard also has been accepted by the European Broadcasting Union (EBU), and is generally referred to as the SMPTE/EBU code.

Time Code offers accuracy and repeatability standards far greater than those attained previously, and is not subject to errors caused by tape slippage, signal dropout, or any of the other problems which detracted from earlier systems.

There are two versions of the SMPTE/EBU code, namely Longitudinal (serial) Time Code, and Vertical Interval Time Code (VITC). The form and content of both codes are essentially similar, the major difference being in their recording methods. Since the APR-5003 uses Longitudinal coding, VITC need not be discussed in this document.

3.2 LONGITUDINAL TIME CODE

In the APR-5003, the Longitudinal Time Code is recorded on the third track in the form of a string of bits (binary digits). For the US television standard of 30 frames per second (Fr/s), the recording frequency is 2400 bits per second. Thus, 80 bits are recorded for each frame of the program material, and each of these bits can have a value assigned so that the 80 bits for any frame represent a specific Time Code. This series of 80 bits is called the Time Code word.

For the European television standard of 25 Fr/s, exactly the same principle is used, the only difference being that to produce a total of 80 bits per frame, the recording frequency is lower, i.e. 2000 bits per second.

3.2.1 Bit Values and Coding

Before any values are assigned, the 80 bits are in the form of a square wave, with 40 positive excursions and 40 negative excursions. In this form, each bit has a value of zero. Figure 3-1A illustrates a sequence of zero-value bits.

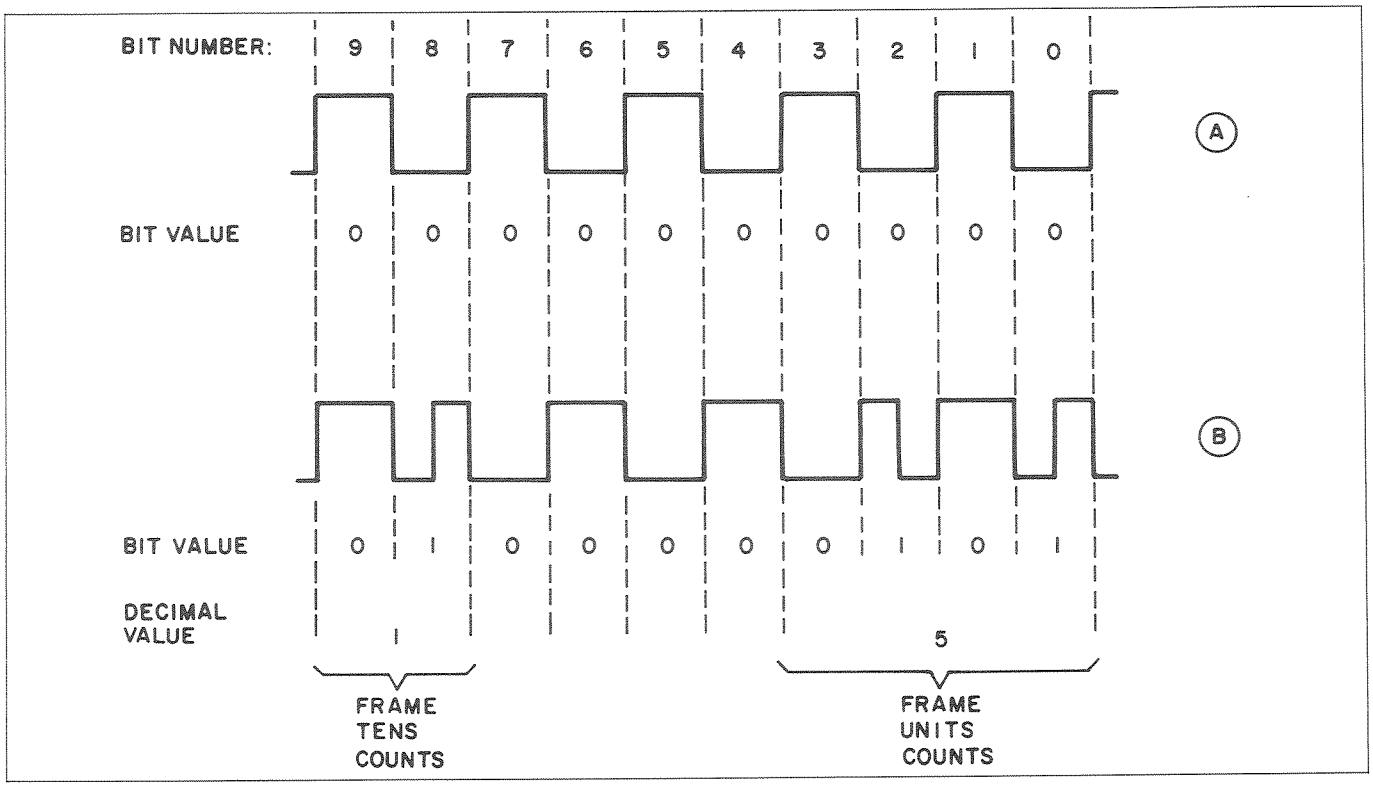

Figure 3-1. Time Code Signal Format

A value of one is assigned to any desired bit by generating a 1/2 bit, i.e. by switching the voltage level at the center of the bit. Figure 3-1B illustrates bits 0 through 9 in the Time Code word. Bits 0 through 3, together with bits 8 and 9 are used for the frame count. (The purpose of bits 4 through 7 will be discussed later.)

The Time Code signal is in BCD (Binary Coded Decimal) format, and the LSB (least significant bit) appears first in the sequence. Thus, referring to Figure 3-1B, bits 0-3, with a binary count of 0101, represent a units count of 5 for the frame number. Similarly, bits 8 and 9, with a binary count of 01, represent a decimal value of 1 for the tens count in the frame number. From this, it is readily seen that the code shown in Figure 3-1B is that for the fifteenth frame in the sequence.

3.2.2 Time Code Bit Assignments

Of the 80 bits generated for each frame, 28 bits are used for counting Time Code. Six bits are assigned for the frame count, seven bits each are assigned for the seconds and minutes counts, and eight bits are assigned for the hours count. The specific bits assigned for each part of the count are setailed in Table 3-1.

BIT NUMBERS	ASSIGNED TO
0-3	Frame Count, Units
8-9	Frame Count, Tens
16-19	Seconds Count, Units
24-26	Seconds Count, Tens
32-35	Minutes Count, Units
40-42	Minutes Count, Tens
48-51	Hours Count, Units
56-59	Hours Count, Tens

Table 3-1. Time Code Bit Assignments

3.2.3 Synchronization Word

The last 16 bits (64 through 79) of the Time Code word are devoted to the sync Word, and are the same in every frame. The sync word is used to notify the machine that the end of the frame has arrived. In addition, the bit pattern is such that it can be used to indicate whether the tape is moving in the forward or reverse direction.

3.2.4 Drop Frame Bit

The SMPTE Time Code is generated at a frame rate of exactly 30 Fr/s, this being compatible with monochrome video recordings. However, for color videotapes, the frame rate is reduced to approximately 29.97 Fr/s, and a reader that counted 30 frames before incrementing each second would introduce a cumulative display error of 3.6 seconds, or 108 frames, every hour. In other words, the Time Code display would not be in agreement with clock time.

To preclude this error, 108 frames counts are dropped from each hour of the Time Code sequence, two frame counts being dropped on every minute except the 10th., 20th., 30th., etc. Each tenth minute is excepted because dropping two frame counts in every minute would result in a total of 120 frames being dropped every hour.

Frame dropping occurs only at the minute changeover points. For example, as the Time Code changes from 01:08:59:29, the next frame number identified (in drop-frame format) becomes 01:09:00:02, frame numbers 00 and 01 having been dropped.

Bit 10 of the Time Code word is used to indicate whether the SMPTE format is DF or NDF, a one in Bit 10 signifying that the format is DF.

Since EBU signals are generated at 25 Fr/s for both color and monochrome video, no drop frame bit is required for the EBU code.

3.2.5 Color Frame Bit

Bit 11 in the Time Code word is used for the color frame bit, since this is required in some systems to indicate adherence to the SMPTE RS 107A standard. This standard prescribes that the Time Code be specifically aligned with (or "framed to") the video signal.

The term "Framing" refers to the specific coding for the frames used in the composition of the video picture. An even code is used to identify the first (A) frame in the Y field color frame sequence, and an odd code is used to identify the second (B) frame in the sequence. In a correctly color framed Time Code, the start of the Time Code coincides with the fifth (+1) line of field 1.

3.2.6 User Bits

Between the Time Code counter bits, the drop frame bit and the color frame bit, are interspersed 32 bits, these being arranged in eight groups of four bits each. These are bits 4-7, 12-15, 20-23, 28-31, 36-39, 44-47, 52-55 and 60-63. These are, in essence, leftover bits, since all of the requirements for time coding are met by those bits described in paragraphs 3.2.1 through 3.2.5.

The leftover bits are generally referred to as "user'bits, and they are available for such auxiliary functions as the user may desire. At this time, the APR-5003 does not support the implementation of the user bits.

SECTION 4
ALIGNMENT

4.1 INTRODUCTION

The information presented in this Section pertains to the Time Code channel and headstack alignments for the APR-5003. It is recommended that all of this material be read and thoroughly understood before any alignment procedures are attempted.

4.2 TEST EQUIPMENT

The equipment required in the performance of these alignment procedures is listed below.

Mono Time Code Checkout Tape	7.5 IPS
(Local fabrication: see paragraph 4.4)	
Dual Trace High Speed Oscilloscope	Tek 545 or eq.
Time Code Generator	Sony BVG-1600.
Time Code Reader	Sony BVG-1500
J2: Zenith Block	J-6105-960-A
AC Voltmeter	HP 400FL or eq.
Standard Alignment Tapes (250 nWB/m)	Mag. Ref. Labs. 7.5, 15 and 30 IPS
J6: Time Code Decoder Box	J-6106-140-A
J7: Center Track Time Code Head Gauge	Sony Part # T-0940-579-(Rev)
Work Tapes	
Dry Erase Marker	Sanford Corp. EXPO or eq.

4.3 ALIGNMENT PROCEDURES

Each of the procedures given below is prefaced with a brief explanation of what is being adjusted and why the adjustment is necessary. It should be noted that the mechanical MUST be completed before the electrical adjustments are carried out. In addition, before the adjustments are carried out, the DIP swithes in the headstack assembly must be set as follows:

S1, S2, S5, S7 and S8 — Closed
S3, S4, and S6 — Open

4.3.1 Head Position Adjustment

The purpose of these adjustments is to optimize Time Code head placement so that the audio and Time Code channels are properly aligned. The Time Code head adjustments are the similar to those for the erase head.

NOTE: Time Code head adjustment is necessary only after a head has been removed and is being replaced, or when the tape is not properly centered on the head surface.

Time Code head height is checked visually, using the center track Time Code head height gauge, as detailed below:

STEP 1 Remove the pinch roller puck and thread the gauge onto the head stack.

STEP 2 Ensure that the gauge is correctly positioned in the left and right fast guides.

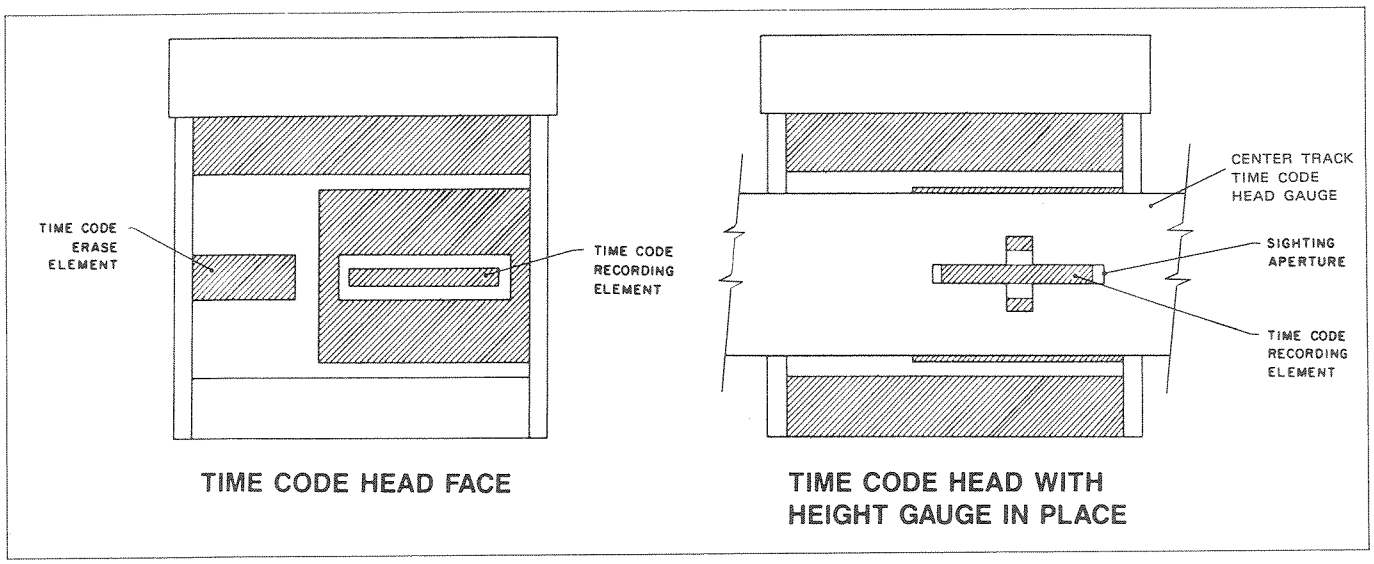

Figure 4-1. Time Code Head Height

STEP 3 Adjust the position of the gauge so that the Time Code recording element is visible through the sighting aperture in the gauge.

STEP 4 Verify that the Time Code recording element is centered exactly along the lateral slot in the sighting aperture, as illustrated in Figure 4-1. If this condition is met, go to STEP 5. Otherwise, go to STEP 6.

STEP 5 Remove the gauge and reinstall the pinch roller puck.

STEP 6 Using the procedure described in paragraphs 6.5.6 (Head Height) and 6.5.7 (Head Zenith Adjustment) in the APR-5000 Operation and Maintenance Manual, adjust the Time Code head height. To verify the adjustment, repeat the procedure given in STEP 1 through STEP 4.

4.3.2 Tape Lifter Adjustment

Tape lifter adjustment is required only if the lifters do not properly move the tape away from the heads when the machine is in a fast wind mode, or if the lifters cause the tape to be mishandled when they are engaged.

To check the lifter operation, the machine is set to a fast wind mode (FFWD or REW), and the tape position and movement is observed. The tape should be in contact with the Time Code head, but not touching any of the other heads, and should move smoothly across the headstack with no tendency toward riding up or down. If these conditions are properly met, lifter adjustment is not necessary.

The lifte spacing should be adjusted with the following procedure:

STEP 1 Unfasten the three mounting screws, and remove the headstack.

STEP 2 Remove the pinch cap and roller.

STEP 3 Unfasten the four mounting screws, and remove the top front overlay panel.

STEP 4 Replace the head stack and the pinch cap and roller. Thread a working tape onto the machine and set the machine power switch to on.

STEP 5 Loosen the tape lifter solenoid mounting screws (Figure 4-2.) and position the solenoid so that the tape is in contact with the Time Code head, but not touching the erase, record or repro heads.

STEP 6 Tighten the solenoid mounting screws, and verify that the adjustment remains unchanged.

STEP 7 Set the machine to FFWD mode. Verify that the tape remains in contact with the Time Code head but does not touch any other head. It should be noted that, when correctly adjusted, the tape is very close to the erase head, but does NOT touch.

STEP 8 Verify that the tape moves smoothly and with no tendency toward riding upward or downward.

STEP 9 Repeat STEP 7 and STEP 8 with the machine in REW mode.

STEP 10 Set the machine power switch to off and unthread the tape. Remove the head stack and the pinch cap and roller.

STEP 11 Replace the top front overlay panel, the pinch cap and roller, and the head stack, ensuring that all parts are properly secured.

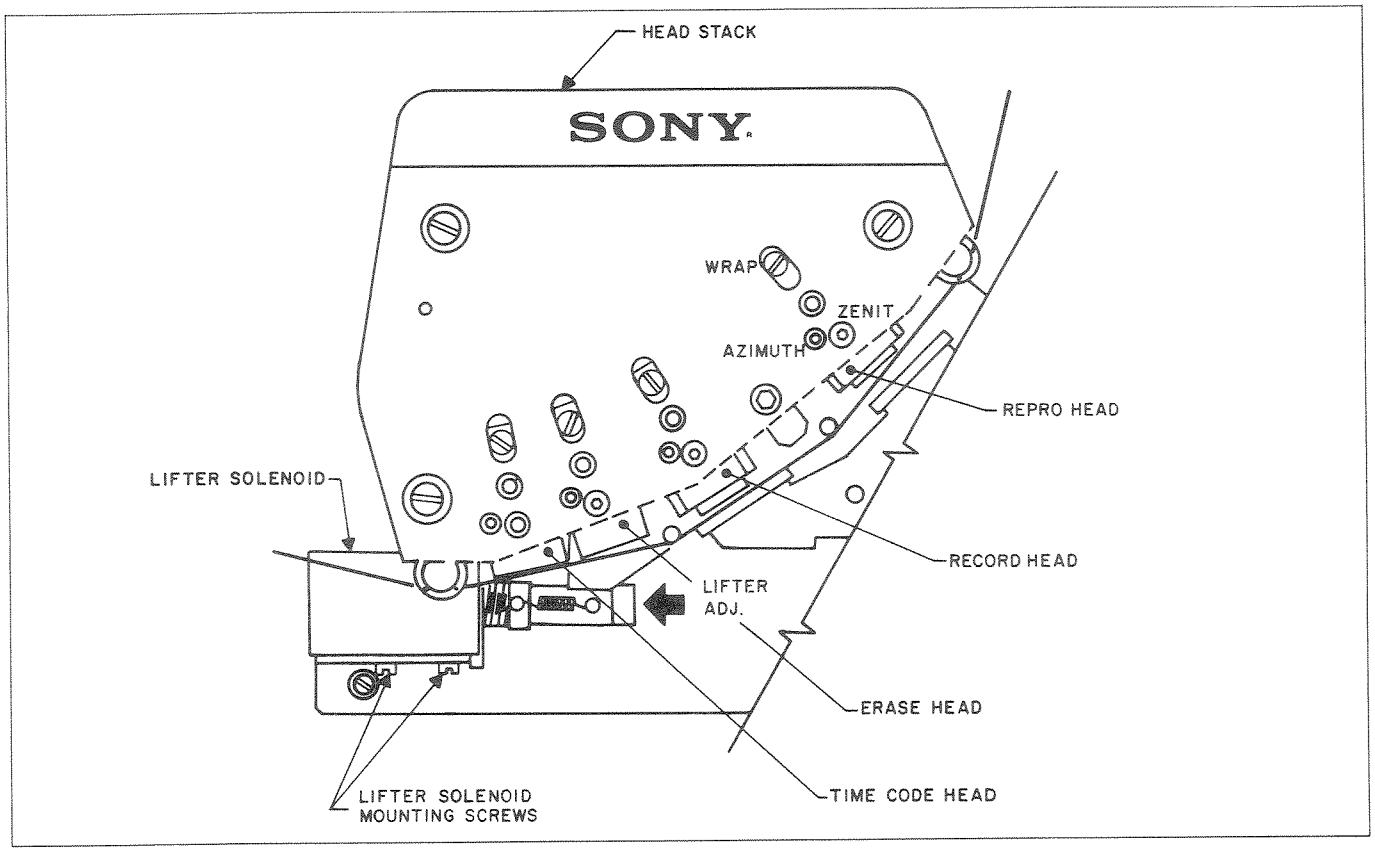

Figure 4-2. Tape Lifter Adjustment

4.3.3 Time Code Channel Alignments

The following paragraphs provide the electrical alignment procedures for the Time Code (SYNC TK 3) Channel. These procedures should not be carried out until all of the mechanical adjustments on the machine have been completed.

It should be noted that the following procedures are for the Time Code channel only, the audio channels being calibrated in accordance with the procedures given in the APR-5000 Operation and Maintenance Manual.

4.3.3.1 Time Code Output and VU Meter

Time Code output level adjustment and VU meter calibration are carried out using the standard audio test tape, as detailed in the procedure given below.

STEP 1 Set the power switch to off and remove the TCC (Time Code Channel) card from the amplifier case. Re-install the TCC card on the PC card extender.

STEP 2 Set the power switch to on, set the tape transport to HIGH (30 IPS) speed, and set all channels to SAFE mode.

STEP 3 Thread the 30 IPS audio test tape on the machine, and connect the AC Voltmeter to the OUTPUT CH-3 connector on the rear door of the machine. (Pin 2 high, pin 3 low.)

STEP 4 Locate the 1 kHz. test tone on the tape, and press IND until the STATUS display indicates "3". Press SYNC LEVEL and observe that the indicator on the switch becomes illuminated.

STEP 5 Press INC (increment) or DEC (decrement) as necessary so that the AC Voltmeter indication becomes +4 dBu.

STEP 6 Adjust RV3 on the TCC card so that the Time Code channel VU meter indication becomes 0 VU.

STEP 7 Set the power switch to off, and remove the TCC card from the extender. Re-install the TCC card in the amplifier case.

4.3.3.2 TRK 3 Presets

Before making INPUT and RECORD adjustments, it is necessary to preset the TRK 3 alignments listed in Table 4-1. These presets establish starting points for the adjustment procedures, as well as setting compensation values to their minimum values. The procedure for entering presets is given in the APR-5000 Operation and Maintenance Manual.

TRK 3	30 IPS	15 IPS	7.5 IPS
Sync Gap Compensation (SGC)	C0	C4	C5
Record Feed Forward	C0	C0	C0
Record Feed Back	C0	C0	C0
Bias Level	30	20	10
Sync Low Frequency	FF	FF	FF
Sync High Frequency	00	00	00
Record High Frequency	FF	FF	FF

Table 4-1. Track 3 Presets

It should be noted that very little bias is required to reproduce Time Code efficiently in high speed wind modes.

4.3.3.3 Sync Level Adjustments

Sync level adjustments are made with separate test tapes for each speed. Before these adjustments are made, the VU meter must be calibrated and the TRK 3 presets must be set in accordance with Table 4-1.

STEP 1 Thread the high speed test tape on the machine, and set the tape transport speed to HIGH (30 IPS).

STEP 2 Locate the 1 kHz. tone on the test tape. Press SYNC LEVEL and observe that the indicator on the switch becomes illuminated.

STEP 3 Press INC or DEC as necessary so that the Time Code channel VU meter indication becomes 0 VU.

STEP 4 Using the appropriate test tapes, repeat STEP 1 through STEP 3. at MED (15 IPS) and LOW (7.5 IPS) speeds.

4.3.3.4 Fine Wrap and Azimuth Adjustments

To achieve optimum positioning of the Time Code head, its azimuth and wrap must be fine tuned. These adjustments are made using the 16 kHz tone on the high speed audio test tape.

The following procedure is used to adjust the Time Code head for optimum performance.

STEP 1 Thread the high speed test tape on the machine, and set the tape transport speed to HIGH (30 IPS).

STEP 2 Locate the 16 kHz. test tone, and adjust the Time Code head azimuth and wrap for maximum output at that frequency.

STEP 3 Manually engage the lifters, and verify that no change occurs in the output level. Should a change occur, repeat the tape lifter adjustment procedure given in paragraph 4.3.2 of this Supplement.

4.3.4 Record Level Adjustments

The Time Code channel automatically switches between INPUT and SYNCHRONOUS REPRO modes as the tape transport is switched between RECORD and PLAY. The Time Code INPUT level is adjusted with the machine in play, and the REPRO level then is adjusted by recording the internal Time Code generator and playing back the result. The setup procedure is given below.

STEP 1 Press CHANNEL 3 READY on the Meter Housing, and then press TC GEN on the Transport Control Panel. Observe that the TC GEN indicator becomes illuminated.

STEP 2 Thread a tape on the transport, and select HIGH (30 IPS) speed.

STEP 3 Press R for both the TAPE TIME and LOCATE TIME indicators.

STEP 4 Press LVL on the INPUT section of the ALN panel.

STEP 5 Press INC or DEC as necessary to set the Time Code VU meter indication to zero.

STEP 6 Press PLAY and RECORD simultaneously, and record at least 30 seconds of Time Code.

STEP 7 Press LOCATE and then PLAY. When the machine enters PLAY mode, observe the Time Code channel VU meter. If the meter indication is zero, no adjustment is required.

STEP 8 If the meter indication is greater than 0 VU, reduce the Channel 3 Record Level parameter. If the meter indication is less than 0 VU, increase that parameter.

STEP 9 If the Record Level parameter has been changed in accordance with STEP 8., repeat STEP 3 through STEP 7 to verify the results of the adjustment.

4.3.5 High Speed Reader Test

This test is performed to verify the results of the preceding alignment procedures, and will show up any errors caused by improper alignment.

NOTE: To allow proper reading of Time Code recorded at MED (15 IPS) or LOW (7.5 IPS) speeds, the wind speed limits must be set. Refer to paragraph 2.4.6 in this Supplement.

STEP 1 Connect the High Speed Time Code Reader (Sony BVG-1500) to the TIME CODE OUTPUT connector on the rear panel.

STEP 2 Set the tape transport speed to HIGH and press TC GEN.

STEP 3 Press R for both the TAPE TIME and LOCATE TIME indicators, then press PLAY and RECORD simultaneously.

STEP 4 When the TAPE TIME becomes 00:05:00:00, press STOP.

STEP 5 Press LOCATE. When the TAPE TIME becomes 00:00:00:00, press PLAY.

STEP 6 Verify that the VALID DATA indicator on the High Speed Time Code Reader remains illuminated while the tape is being played back.

STEP 7 When the TAPE TIME becomes 00:05:00:00, press STOP then REW. Verify that the VALID DATA indicator on the High Speed Time Code Reader remains illuminated in REWIND mode.

STEP 8 Press FFWD and verify that the VALID DATA indicator on the High Speed Time Code Reader remains illuminated in FAST FORWARD mode.

STEP 9 Set the tape speed to MED, and repeat STEP 3 through STEP 8.

STEP 10 Set the tape speed to LOW, and repeat STEP 3 through STEP 8.

4.3.6 Time Code Head Block Longitudinal Offset

Two Time Code longitudinal offsets need to be adjusted for correct operation, one for recording and one for playback, and this is accomplished by fine-tuning the wraps on the record and repro heads.

Before carrying out the following procedures, all of the adjustments given in paragraphs 4.3.1 through 4.3.5 must have been completed.

STEP 1 Connect the equipment as illustrated in Figure 4-3. Set the Time Code Generator to OFF. On the Oscilloscope, set Channel 1 for normal operation, Channel 2 for inverted operation, and the function switch for an algebraic sum display.

STEP 2 Thread the 7.5 IPS mono Time Code test tape on the transport and set the transport speed to LOW. Set the Time Code source to internal (TC GEN indicator illuminated).

STEP 3 For both channels, press REPRO on the MONITOR section of the Meter Housing panel.

STEP 4 Press PLAY and observe the Oscilloscope display. Adjust the repro head wrap so that the two Time Codes are brought into alignment within ±0.5 bit cells. This condition is achieved when the positive and negative excursions on the display are equal in width and of minimum duration.

STEP 5 For both channels, press SYNC on the MONITOR section of the Meter Housing panel.

STEP 6 Press PLAY and observe the Oscilloscope display. Adjust the record head wrap so that the two Time Codes are brought into alignment within ±0.5 bit cells. This condition is achieved when the positive and negative excursions on the display are equal in width and of minimum duration.

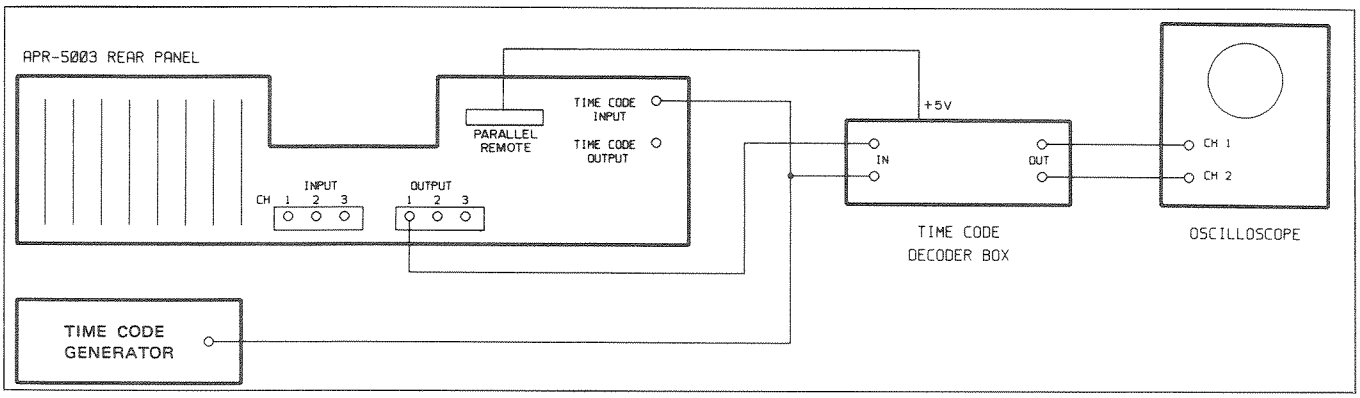

Figure 4-3. Longitudinal Offset Test Connections

NOTE: STEP 7 and STEP 8 are carried out to verify the wrap of the repro and record heads. If the longitudinal offset adjustments cannot be completed without upsetting these head wraps, all heads should be checked for correct parts placement and fore and aft positioning.

STEP 7 Move the tape away from the head stack, and use the dry erase marker to ink the faces of the repro and record heads. Ensure that the marking is symmetrical with respect to the crown of each head, as illustrated in Figure 4-4.

CAUTION

Do not use any marker pen other than the dry erase type. A permanent marker, or one requiring wet erasure can cause damage to the heads.

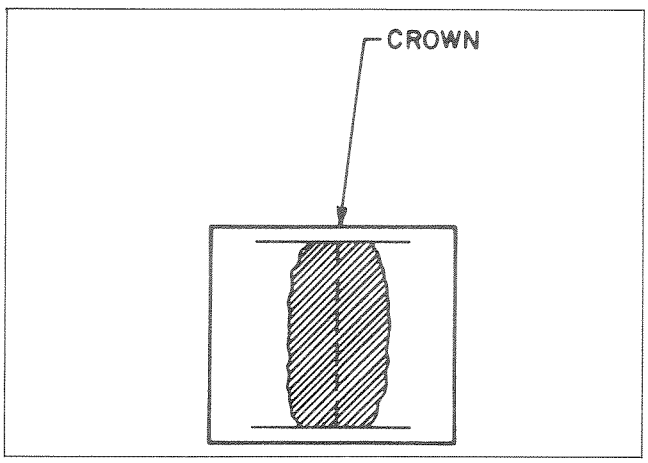

Figure 4-4. Ink Distribution on Head Surface

STEP 8 Set the machine to PLAY mode, and allow it to run for five seconds. Move the tape away from the head stack, and inspect both of the marked heads. Verify that the ink is worn away to an equal distance on either side of the crown, as illustrated in Figure 4-5. If the wear pattern is correct, go to STEP 9. Otherwise, repeat the procedure given in STEP 1. through STEP 6.

STEP 9 Press TC GEN to select external Time Code (TC GEN indicator illuminated), and set the Time Code Generator to ON.

STEP 10 Set the Time Code channel to the RECORD READY mode, then press PLAY and RECORD simultaneously. Record about one minute of Time Code.

STEP 11 Rewind the tape and play back the recorded Time Code while observing the Oscilloscope display. The Time Codes should be aligned within ±1.0 bit cells. This condition is achieved when the positive and negative excursions on the display are of equal width and are less than 41.5 microseconds in duration.

4.3.7 CHASE Mode Verification

The CHASE mode verification test is carried out to check the correct operation of the Time Code synchronizer at all three tape speeds. This test requires the use of a master machine capable of delivering high speed Time Code.

STEP 1 Connect the equipment as illustrated in Figure 4-6. On the Oscilloscope, set Channel 1 for normal operation, set Channel 2 for inverted operation, and set the function switch for an algebraic sum display.

STEP 2 On the APR-5000, set memory location 00 to 0 (see paragraph 2.4.1 in this Supplement).

STEP 3 Thread a 7.5 IPS mono Time Code tape on

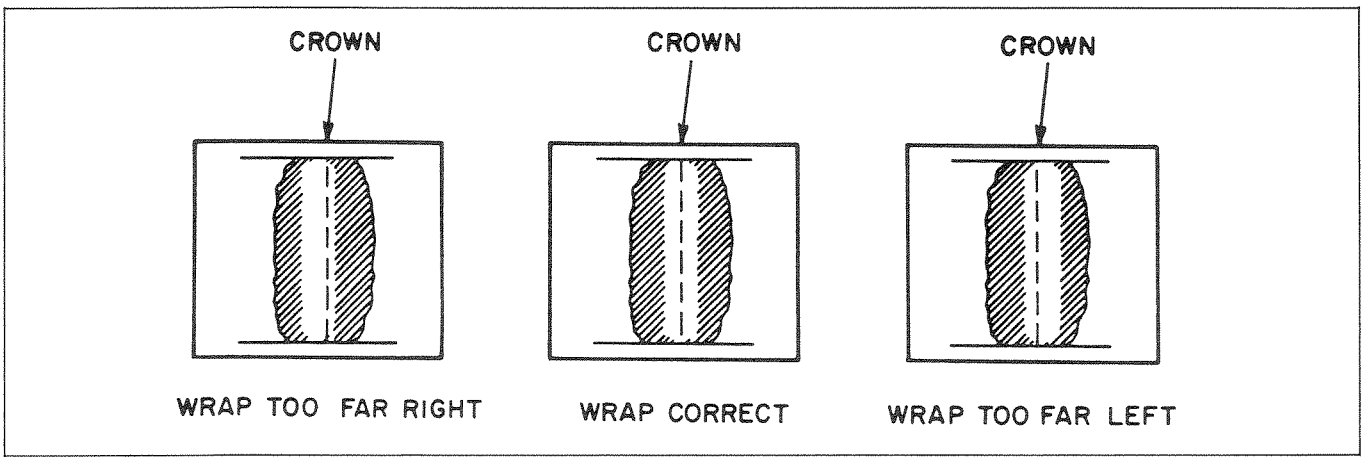

Figure 4-5. Ink Wear Patterns

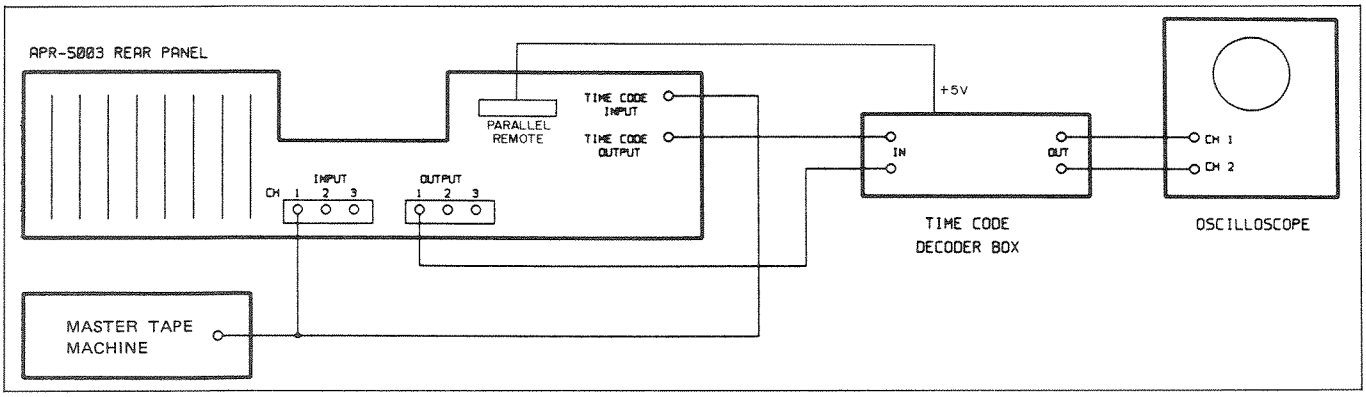

Figure 4-6. CHASE Mode Verification Connections

the APR-5000, and thread a tape striped with a similar Time Code format on the master machine.

STEP 4 For both channels on the APR-5000, press REPRO on the MONITOR section of the Meter Housing panel.

STEP 5 Set the master machine into PLAY mode.

STEP 6 On the APR-5000, press CHASE . Verify that the APR-5000 becomes slaved to the master machine.

STEP 7 Observe the Oscilloscope display. The Time Codes should be aligned within ±1.0 bit cells. This condition is achieved when the positive and negative excursions on the display are of equal width and are less than 41.5 microseconds in duration.

STEP 8 For both channels on the APR-5000, press SYNC on the MONITOR section of the Meter Housing panel. Verify that the APR-5000 is slaved to the master machine.

STEP 9 Observe the Oscilloscope display. The Time Codes should be aligned within ±1.0 bit cells. This condition is achieved when the positive and negative excursions on the display are of equal width and are less than 41.5 microseconds in duration.

STEP 10 Set the master machine to FAST FORWARD mode for three seconds. Verify that the APR-5000 follows into the FAST FORWARD mode.

STEP 11 Set the master machine into REWIND mode for three seconds. Verify that the APR-5000 follows into the REWIND mode.

STEP 12 Repeat STEP 4 through STEP 11 with a 15 IPS Time Code tape on the APR-5000 and an appropriate tape on the master machine.

STEP 13 Repeat STEP 4 through STEP 11 with a 30 IPS Time Code tape on the APR-5000 and an appropriate tape on the master machine.

4.4 TIME CODE CHECKOUT TAPE FABRICATION

A suitable Time Code Checkout Tape can be fabricated using any full track Mono Tape machine and any Time Code source. (The TIME CODE OUT connector on the APR-5003 provides an excellent Time Code source.) The following procedure details the tape fabrication method.

CAUTION

CHECKOUT TAPES FABRICATED AS DETAILED BELOW SHOULD BE USED FOR NO OTHER PURPOSE THAN TIME CODE CHECKOUTS AND SETUPS

STEP 1. Using a 7.5 IPS Standard Alignment Tape, adjust the repro level on the Mono Tape Machine for an indication of 0 VU at 250 nWB/m (nanowebers per meter).

STEP 2. Remove the Alignment Tape from the Mono Tape Machine, and reload the machine with a blank tape.

STEP 3 Connect the Time Code source to the recording input on the Mono Tape Machine.

STEP 4 Set the Mono Tape machine for simultaneous record/repro operation at 7.5 IPS.

STEP 5 Set the Time Code source to supply SMPTE Non-Drop Frame code. (If APR-5003 is used as the Time Code source, refer to paragraphs 2.4.3 and 2.4.4 of this document.

STEP 6 Turn on the Time Code source and set the Mono Tape machine to record mode. On the Mono Tape machine, adjust the recording level so that the VU meter indicates 0 VU.

STEP 7 Record approximately 3-5 minutes of Time Code, then turn off both the Time Code source and the Mono Tape machine.

STEP 8 Remove the completed Time Code Checkout Tape from the Mono Tape machine.

SONY

ANALOG TAPE RECORDER

APR-5003V

SUPPLEMENT

This supplement is applicable to APR-5001/5002/5003V Series operation and maintenance manual.

TABLE OF CONTENTS

SECTION 1 CONTROLS AND INDICATIONS

1.1 OVERVIEW 1-1
1.2 TRANSPORT CONTROL PANEL 1-1
1.2.1 Key and Display Functions 1-2
1.2.2 Numeric Keypad 1-6
1.3 ALIGNMENT CONTROL PANEL 1-7
1.3.1 Alignment Procedures 1-7
1.3.2 STATUS Display 1-7
1.3.3 Track Selection 1-8
1.3.4 Parameter Selection 1-8
1.3.5 Audio Parameter Calibration Adjustment 1-9
1.3.6 Equalization Standards 1-9
1.3.7 Alignment Presets 1-9
1.3.8 User Label 1-10
1.3.9 Speed Select Keys 1-10
1.3.10 Secondary Functions 1-10
1.4 METER HOUSING CONTROLS 1-11
1.4.1 Audio Channel Functions 1-11
1.4.2 Monitor Speaker 1-12
1.5 STORAGE LOCATION RELATED OPERATIONS 1-12
1.5.1 Resolve on Play 1-12
1.5.1.1 Resolve Capabilities 1-13
1.5.2 PREVIEW, EDIT and REVIEW 1-13
1.5.2.1 PREVIEW 1-14
1.5.2.2 IN POINT and OUT POINT Bit Delays 1-14
1.5.2.3 EDIT 1-14
1.5.2.4 REVIEW 1-14
1.5.3 Triggered Edit Synchronization 1-14
1.5.4 FIND 1-16
1.5.4.1 FIND Operation 1-16
1.6 STORE/RECALL Sequence Operations 1-16
1.6.1 Locations 00 through 29—Position Registers
Location 50 —Acceleration Allowance Preset
Location 51—PREROLL DURATION Preset
Location 52—POSTROLL DURATION Preset 1-16
1.6.1.1 RECALL Procedure 1-16
1.6.1.2 STORE Procedure 1-16
1.6.2 Locations 30 through 49—Enables and Selects
Location 91—IN POINT Bit Delay
Location 93—FIND Enable
Location 95—PREVIEW Enable
Location 96—EDIT Enable
Location 97—REVIEW Enable 1-17
1.6.2.1 RECALL and/or STORE Procedure 1-17
1.6.3 Location 98—BIT BUMP 1-17
1.6.3.1 Adjustment Procedure 1-17
1.6.4 Location 99—Offset Calculation 1-17
1.6.4.1 Offset Capture and Display 1-17
1.6.4.2 Offset Capture, Display and Store 1-17

SECTION 2 OPERATION

2.1 MACHINE OPERATION 2-1
2.1.1 Mounting the Reels 2-1
2.1.2 Threading the Tape 2-1
2.1.3 Transport Control 2-2
2.1.3.1 Fast Wind Modes 2-2
2.1.3.2 MVC Operation 2-3
2.1.4 PLAY 2-3
2.1.4.1 Initial Setup 2-3
2.1.4.2 PLAY Operation 2-3
2.1.5 Recording 2-3
2.1.5.1 Initial Setup 2-3
2.1.5.2 RECORD Operation 2-3
2.1.5.3 Monitoring During Record 2-3
2.1.6 Other Operations 2-4
2.1.6.1 SPOT ERASE 2-4
2.1.6.2 REPEAT 2-4

SECTION 1
CONTROLS AND INDICATORS

1.1 OVERVIEW

In this section of the manual, the functions of all control keys and indicators on the Tape Transport, the Alignment Control Panel, and the Meter Housing are described, together with the basic operating sequences.

1.2 TRANSPORT CONTROL PANEL

The functions of all the keys and indicators on the tape transport control panel are described in the following paragraphs. Refer to Figure 4-1 for all key and indicator locations.

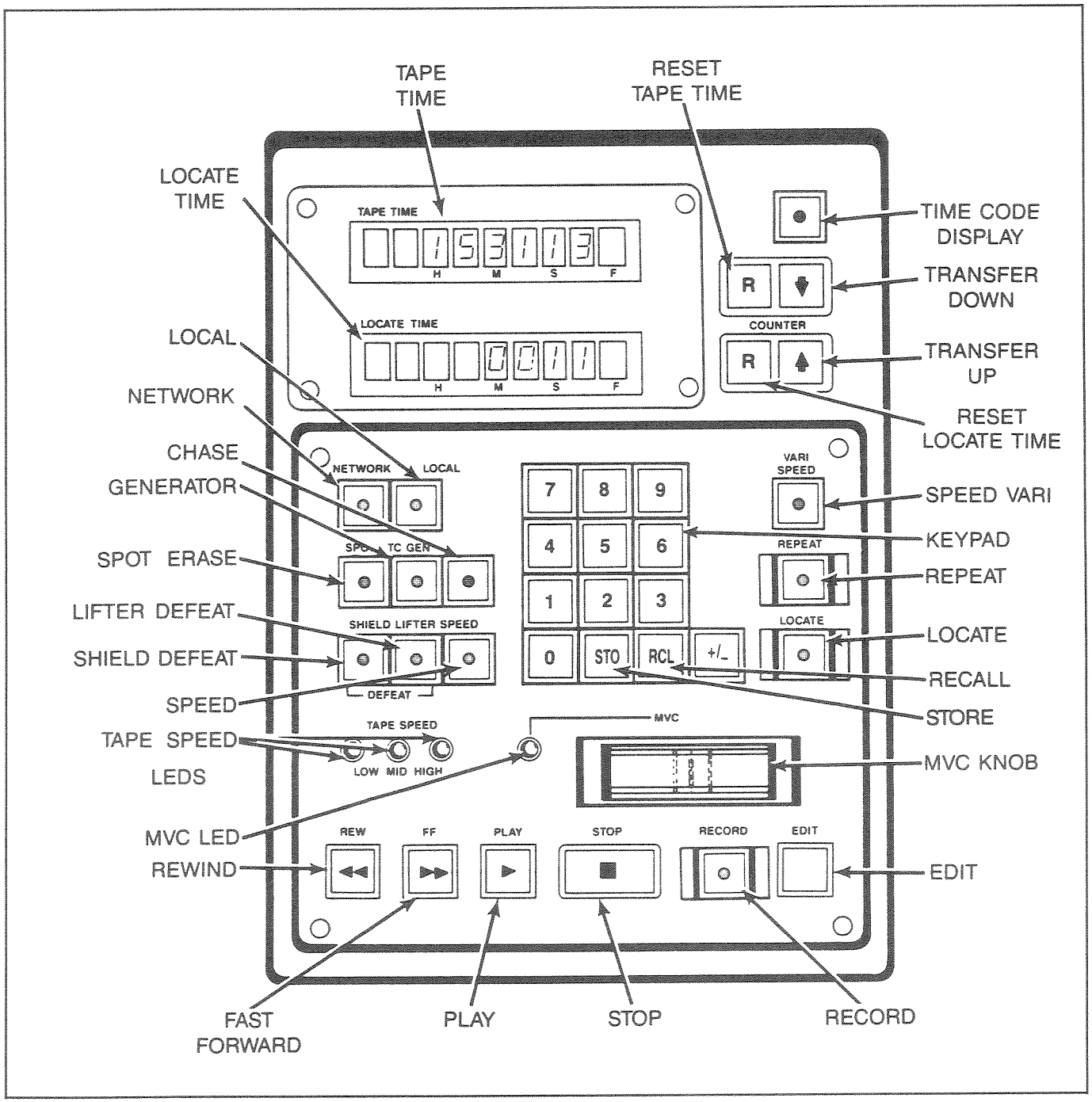

Figure 1-1. Transport Control Panel

1.2.1 Key and Display Functions

REW

Pressing REW (REWIND) causes the transport to go into fast rewind mode. This operation cancels any previous motion command such as FAST FORWARD, PLAY or RECORD. Except when used in conjunction with SHIELD DEFEAT, REW also causes the audio channels to be muted.

Touching the MVC control during FAST REWIND causes the transport to enter SPOOL mode. In this mode, the wind speed is reduced to about 75 ips (inches per second) so as to allow more uniform packing of the tape.

FF

Pressing FF (FAST FORWARD) causes the transport to enter the FAST FORWARD mode, this overriding any previously selected motion command such as REWIND, PLAY or RECORD. Except when used in conjunction with SHIELD DEFEAT, FF also causes the audio channels to be muted.

As with REWIND mode, touching the MVC control during FAST REWIND causes the transport to enter SPOOL mode.

STOP

Pressing STOP cancels any previously selected motion command and stops the tape. This causes the STOP key to illuminate (so long as there is tape across the End of Tape sensor). The audio channels will be muted unless either LIFTER DEFEAT or SHIELD DEFEAT is selected.

PLAY

Pressing PLAY initiates the PLAY mode, causing the tape to shuttle across the heads at the selected play speed. PLAY also is used to trigger RESOLVE ON PLAY operation (paragraph 1.5.1), to manually trigger PREVIEW/EDIT/REVIEW operations, or to exit the RECORD operation.

Unless SHIELD DEFEAT is selected, the audio channels are muted during the period between start-up and the time that play speed is achieved.

RECORD

Pressing RECORD together with PLAY sets those channels that are in RECORD READY (see paragraph 1.4.1 — **RECORD** section) into RECORD Mode, which can be entered from the STOP, FAST FORWARD or REWIND modes. To enter RECORD from the PLAY mode, it is necessary only to press RECORD . If no channels are in RECORD READY (all channels in SAFE) the transport will not enter RECORD mode.

Once the transport is in RECORD mode, the recording status of any channel can be changed by first pressing the channel's **RECORD** READY key (see paragraph 1.4.1 — **RECORD** section), and then pressing RECORD . For instance, let it be assumed that the transport has been set into RECORD with only Channel 1 actually recording. Channel 2 can be set into RECORD at any time by simply pressing the CH 2 READY key, and then pressing RECORD . Conversely, given the same situation, Channel 1 can be taken out of RECORD by pressing CH 1 READY and then pressing RECORD .

SPEED

This key is used to set the desired PLAY speed. Each time the key is pressed the speed advances to the next higher speed, which then is shown on the **HIGH**, **MID**, or **LOW TAPE SPEED** indicator. The range of these speeds is set by the headstack identification code. At machine power-up, the most recently used speed will be automatically selected.

LIFTER

Pressing LIFTER (LIFTER DEFEAT) causes the lifters to be defeated, allowing them to remain disengaged when in any FAST WIND mode, i.e. FAST FORWARD, REWIND, LOCATE or SPOOL.

SHIELD

The SHIELD (SHIELD DEFEAT) key is used to deactivate the shields. When this key is pressed, it illuminates to indicate that the shield will stay down during PLAY or RECORD, and that the audio channels will stay unmuted.

EDIT

The EDIT mode is used to facilitate the splicing and edit-assembly operations, and offers two different methods, as follows:

EDIT — In EDIT, all tape tensions are relaxed, making it possible to use the splicing block.

DUMP EDIT — In this mode, the tape is played across the heads, but the take-up reel is turned off so that the tape runs off the machine into a suitable waste container.

EDIT is entered from the STOP position by pressing EDIT, this key becoming illuminated to show that EDIT mode has been entered and that all tape tensions are relaxed. EDIT mode can be cancelled either by pressing EDIT again, or by pressing STOP.

DUMP EDIT is entered from the EDIT mode by pressing PLAY. Before entering this mode, the tape should first be cut, and have its leading edge dressed off the machine to the right. From DUMP EDIT, pressing STOP causes the transport to revert to EDIT mode, which then can be cancelled by pressing either EDIT or STOP.

LOCATE

Selecting LOCATE causes the transport to fast wind from the current location shown in the **TAPE TIME** display to the location shown in the **LOCATE TIME** display, the direction of wind being determined by the relative values in the two displays. If so desired, the SPOOL Mode can be entered by momentarily touching MVC after entering LOCATE Mode.

REPEAT

In the REPEAT mode, the tape transport repeatedly plays the same tape segment. The mode can be cancelled by pressing STOP.

To program the REPEAT function, the START time is entered into Storage Location 28 and the END time is entered into Storage Location 29. In order for the REPEAT function to operate, the specified END time must be later than the START time. Negative numbers are permissible so long as a positive number results when the value in Storage Location 28 is subtracted algebraically from that in Location 29.

MVC

The MVC (MANUAL VELOCITY CONTROL) knob provides a number of functions, depending upon the current mode of operation.

In the STOP mode, MVC can be used to shuttle the tape backward or forward at a selectable winding speed, the direction and speed depending upon the way the control is operated. With the control pushed to the right, the tape winds in the forward direction. Conversely, with the control pushed to the left, the tape rewinds. In either case, the wind speed depends upon the distance from center that the control is moved. With the control pushed fully left or fully right, the tape shuttles at a speed somewhat greater than that of the SPOOL mode. MVC operation in the STOP mode is summarized in Figure 1-2.

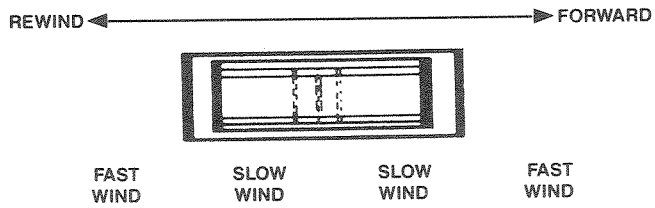

Figure 1-2. MVC Operation

In the LOCATE, FAST FORWARD and REWIND modes, simply touching the MVC control causes transport to enter SPOOL mode, with the wind speed reduced to 75 ips.

In PLAY mode, the MVC control is disabled, except when VARI SPEED EXECUTE mode also is selected. In the VARI SPEED EXECUTE mode, the MVC control can be moved to the right to increase the play speed or to the left to reduce the play speed.

VARI SPEED

The VARI SPEED key is used to enable the VARIABLE SPEED mode which allows the selected play speed to be either increased or reduced by up to 50% of its nominal rate. Desired VARIABLE SPEED values are entered in terms of percentage, positive values leading to an increase in speed, and negative values leading to a reduction in speed. Where any value greater than 50% is entered, it becomes automatically truncated to 50%.

VARIABLE SPEED entries can be made via either one of two modes, as illustrated in Figure 1-3 and described below:

To enter the DIRECT SPEED ENTRY mode, VARI SPEED is pressed once. At this time, the key indicator flashes on and off, and any VARI SPEED value that may have been previously entered is shown on the **LOCATE TIME** display. In this mode, the desired percentage is entered via the numeric keypad.

Once the VARISPEED value has been entered in this manner, the transport can be made to play at the modified speed by simply pressing VARI SPEED again. (It should be noted that this automatically sets the transport into the MANUAL SPEED ENTRY mode described below.)

The MANUAL SPEED ENTRY mode can be entered by pressing VARI SPEED twice. In this mode, any existing VARI SPEED value also is shown in the **LOCATE TIME** display, but the key indicator is solidly illuminated. The desired VARI SPEED percentage now can be entered by means of the MVC control.

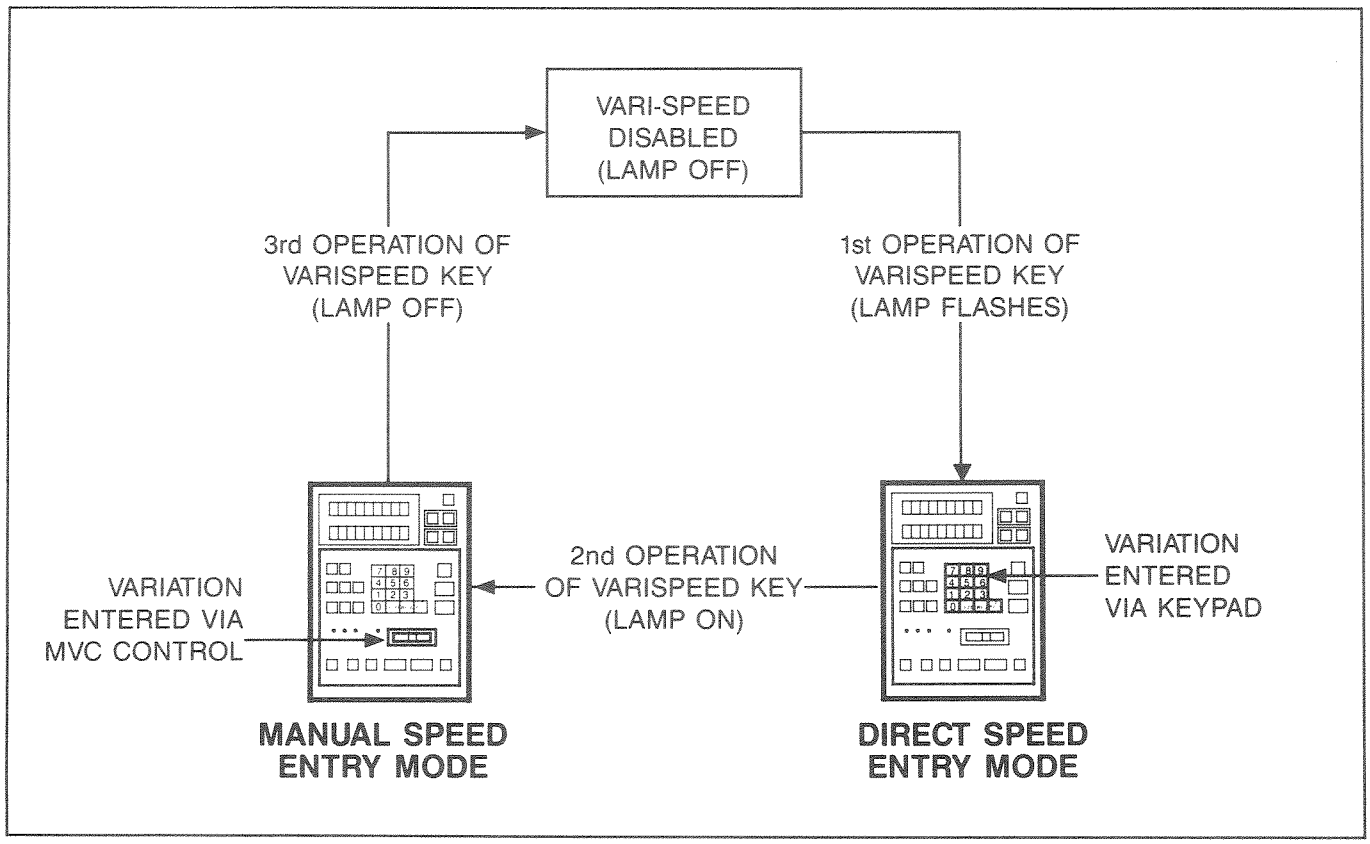

Figure 1-3. VARIABLE SPEED Modes

Moving this control to the right causes the percentage to increase (become more positive), while moving it to the left causes the percentage to decrease.

In MANUAL SPEED ENTRY mode, the VARI SPEED value can be displayed, if so desired, in terms of semitones up or down and inches per second. This display can be invoked by presetting Storage Location 41 to a value of 1. It should be noted that the semitone values are displayed only in increments of 0.25 semitones.

When the VARISPEED value is entered in MANUAL SPEED ENTRY mode, the transport automatically plays at the modified speed, no further action being necessary. To exit VARI SPEED, the VARI SPEED key should be pressed.

TC GEN

Time Code can be recorded from either an internal or an external reference. Further, the Time Code data can be either VITC (Vertical Interval Time Code) or LTC (Longitudinal Time Code). The TC GEN (TIME CODE GENERATOR) key is used to select the desired reference and data options for the Time Code Generator by cycling through three mutually exclusive modes, each of which is identified by the condition of the key indicator.

At power-up, the TC GEN indicator is not illuminated, and this condition indicates that, when activated, the generator will record Time Code in accordance with external reference and data. It should be noted that Storage Location 37 must be preset in accordance with the external reference, i.e.:

LOCATION 37	0 = LTC data
	1 = VITC data

From the state described above, pressing TC GEN causes the key indicator to flash on and off, showing that the recorded Time Code will be in step with the external reference (selected in accordance with Location 37), but can be started from a preset internal start time.

NOTE: The Time Code Channel must be in RECORD READY before the entered Time Code can be transferred in the manner described below.

The desired start time can be preset by entering the time into the LOCATE TIME display via the numeric keypad, and then moving it into the TAPE TIME display by pressing the TRANSFER UP key.

From the flashing-key mode, the next operation of the TC GEN key causes the key indicator to become

TC GEN INDICATOR	TIME CODE REFERENCE	TIME CODE DATA
OFF (Power-up default)	EXTERNAL As selected in Storage Location 37 0 = LTC DATA 1 = VITC DATA	EXTERNAL
FLASHING	EXTERNAL As selected in Storage Location 37 0 = LTC CLOCK 1 = VITC CLOCK	INTERNAL START POINT
ON	INTERNAL	INTERNAL START POINT

Table 1-1. Time Code Options

solidly illuminated, showing that the generated Time Code will be in accordance with internal reference and start point. In this mode, Storage Location 37 has no bearing, but Storage Locations 31 and 32 must be preset in accordance with the desired Time Code type, as follows:

NOTE: Where EBU or FILM Time Code types are selected, Storage Location 32 is automatically set to a value of 0.

Storage Location 31: 0 = SMPTE
1 = EBU
2 = FILM

Storage Location 32: 0 = Non-Drop Frame
1 = Drop Frame

CAUTION: The internal crystal references for SMPTE NDF, EBU, and FILM Time Code types is accurate to ± 50 ppm. Where SMPTE DF Time Code generation is required, it is advisable to use an external reference (house video). All SMPTE Time Code produced by the internal generator is at 30 Frames/sec.

Once the Time Code parameters have been set, as described above, the generator is activated by pressing PLAY and RECORD simultaneously.

TAPE TIME

The **TAPE TIME** display provides tape time information in either one of two formats, the format depending upon whether or not the TC DISPLAY key is selected.

Where TC DISPLAY is not selected, the key is extinguished, and the **TAPE TIME** display shows a real time representation of tape position. The format for this display is:

Hh Mm Ss n

in which: H = tens of hours
h = hours
M = tens of minutes
m = minutes
S = tens of seconds
s = seconds
n = tenths of seconds

Where TC DISPLAY is enabled, TC DISPLAY is illuminated, and the **TAPE TIME** display shows either the external Time Code presented to the machine (STOP mode) or the internal Time Code from tape (modes other than STOP), the format in this case being:

Hh. Mm. Ss. Ff.

in which Hh, Mm, and Ss remain as defined above, but F = tens of frames and f= frames.

LOCATE TIME

This display is used for all generalized data entry and recall procedures. The machine will LOCATE to the time presented in this display. In addition, other information which may be monitored on this display are STO (STORE) and RCL (RECLAIM) setup/confirmation and VARI SPEED percentage, inches per second, and semitones

TC DISPLAY

This key is used to toggle the **TAPE TIME** display between TIME CODE DISPLAY and TAPE TIME, becoming illuminated when TC DISPLAY is selected.

R

Each of the time displays has an associated **R** (RESET) key. When pressed, the upper **R** key clears the **TAPE TIME** display down to 00.00. Similarly, the lower **R** key clears the **LOCATE TIME** display.

↑ and ↓

The Up/Down arrow keys allow location and time data to be transferred between displays. Pressing ↓ transfers the contents of the **TAPE TIME** display down to the **LOCATE TIME** display, and can be used to capture tape time or Time Code information. Pressing ↑ transfers the contents of the **LOCATE TIME** display up to the **TAPE TIME** display, allowing the Time Code recording start point or the tape time position to be preset.

CHASE

The CHASE (follow and lock) facility provides for synchronization of the machine to an external Time Code reference, a necessary pre-requisite being that the external Time Code reference be of the same type as that on the tape. Provision is made for offsetting so that either Slave is ahead of Master or vice versa. Refer to Storage Locations 00 and 98 for Frame and Bit offsets respectively.

The external Time Code reference can be either LTC or VITC, and the External Lock Reference must be entered into Storage Location 37, as follows:

LOCATION 37 0 = Longitudinal Time Code
1 = Vertical Interval Time Code

Once the desired offset and External Lock Reference have been entered, **CHASE** is pressed to enable the facility. When **CHASE** is first pressed, the indicator flashes on and off to show that the mode is selected but that the Master and Slave machines are not locked. Once lock is attained, the indicator becomes solidly illuminated.

SPOT

The **SPOT** (SPOT ERASE) key disables the record head but leaves the erase head on so that tape can be erased (with no bias frequency from the record circuitry). When **SPOT** is pressed, the key flashes to indicate that this mode is armed.

Once armed, the SPOT ERASE mode can be entered by pressing **RECORD**, so long as at least one channel is in RECORD READY. The erase head will turn on, this being indicated by the Meter Housing **ERASE** indicators for all active channels becoming illuminated. At this time, the desired section of tape can be erased by passing it manually over the erase head. To cancel SPOT ERASE, **STOP** should be pressed.

LOCAL and NETWORK

The **LOCAL** and **NETWORK** keys are used to select the transport control source. Each of these keys becomes illuminated when selected.

When **LOCAL** is selected, all transport control is derived from the panel keys or from a parallel remote control.

When **NETWORK** is selected, machine control originates from the network (serial remote control), and the machine transport and audio controls are all disabled.

If both **LOCAL** and **NETWORK** are selected (BOTH mode), parallel control is available from either the serial remote control or from the machine panel keys on a first come, first served basis.

1.2.2 Numeric Keypad

The Numeric Keypad section of the Transport Control Panel is used to make numeric entries, to store data, and to reclaim data. The functions of all of the keypad controls are described briefly below.

+/−

Pressing **+/−** reverses the sign of the contents of the **LOCATE TIME** display. Where it is desired to change the sign of the **TAPE TIME** display value, it can be transferred down into the **LOCATE TIME** display, changed, and then transferred back up to **TAPE TIME**.

0 through 9

These keys provide the means of entering specific values into the **LOCATE TIME** display. They also are used in conjunction with **STO** and **RCL** to store and reclaim data to and from Memory and Storage locations.

STO and RCL

The **STO** (STORE) and **RCL** (RECALL) keys are used in conjunction with the numeric keys to store and reclaim data to and from Memory and Storage locations.

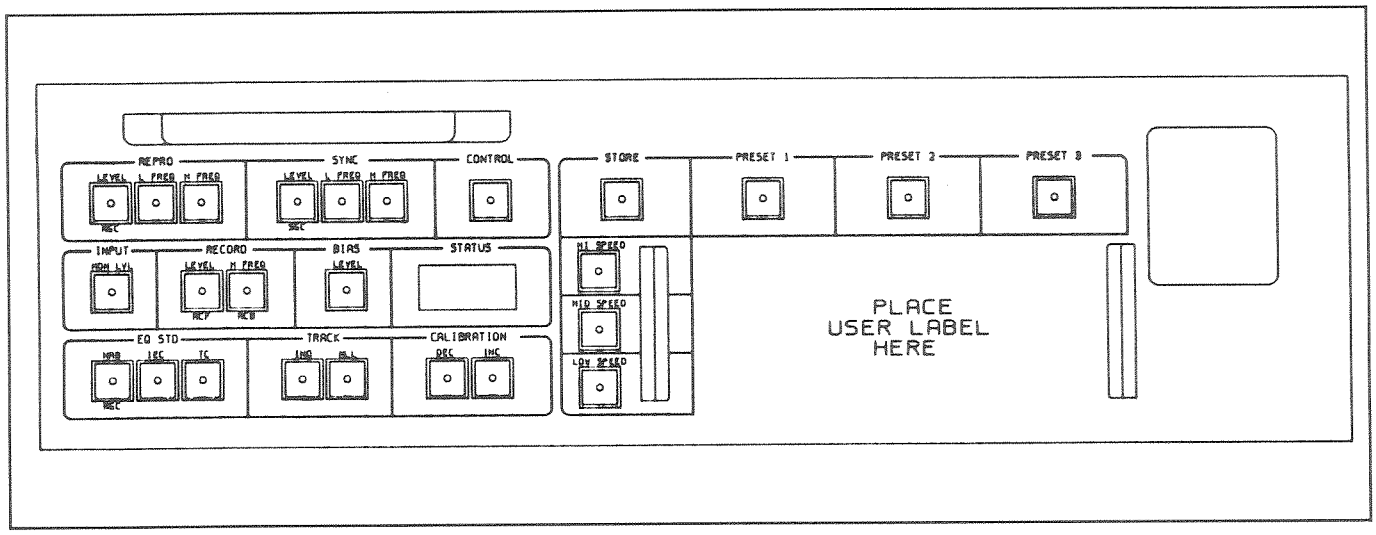

Figure 1-4. Alignment Control Panel

1.3 ALIGNMENT CONTROL PANEL

This section describes the operations associated with the Alignment Control Panel (Figure 1-4). It should be noted that four of the keys on this panel have secondary functions, these being indicated by means of blue markings below the keys.

1.3.1 Alignment Procedures

In general, the machine's alignment procedure is much the same as that for the traditional professional analog recorder. However, it differs in that it does not require manual adjustments, all parameter selection and calibration being performed by keystroke operations. In general, the alignment procedure follows the sequence shown in Figure 1-5.

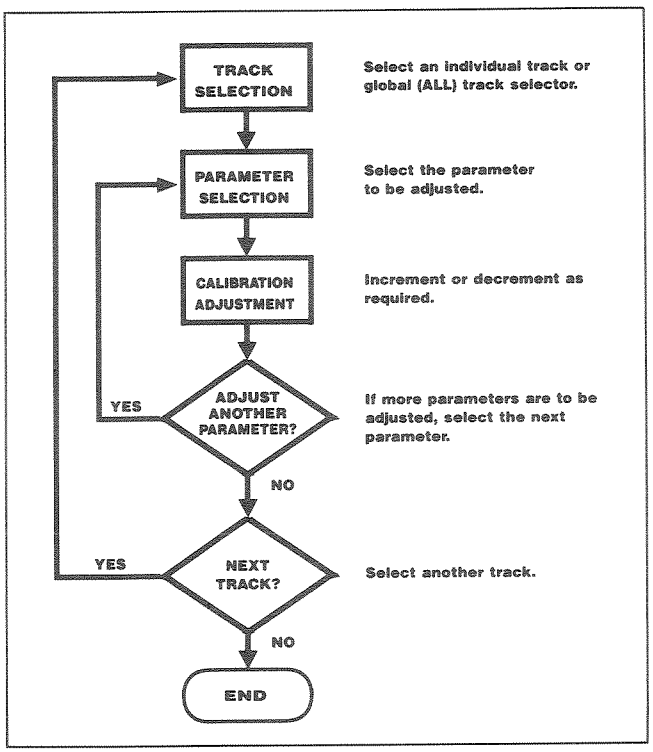

Figure 1-5. Alignment Procedure Flow Chart

1.3.2 STATUS Display

This two-digit display indicates either the track that is selected for calibration or a specific parameter value, a single digit indication denoting the track being adjusted. When any parameter is selected, both decimal points become illuminated and the display shows a two-digit hexadecimal number which is representative of the parameter value.

00 to FF	Indicate the hex value of a specific alignment function
ALL	Selects all tracks to be active
1	Track 1 active
2	Track 2 active
3	Track 3 active
PE	Preset Error
HI	Headstack Invalid
HE	Headstack Error
HO	Headstack Off

Table 1-2. Status Display Codes

It should be noted that the hexadecimal values shown in the display are not intended for use in setting absolute parameter values. Parameters should be adjusted in accordance with the appropriate meter indications, the hexadecimal values being used primarily for storage purposes.

As well as performing the functions described on the preceding page, the **STATUS** Display is used to show error codes. Table 1-2 lists all of the possible display indications, and Appendix A to the **APR-5000** Series Operation and Maintenance Manual further describes the error codes.

1.3.3 Track Selection

Track selection is made by means of the IND and ALL keys on that section of the panel labelled **TRACK**.

IND

Selects an individual track for adjustment. The first operation of the key selects Track 1, and each subsequent operation advances the selection to the next track. When pressed while CONTROL is held down (in the same manner as a typewriter shift key), IND moves the selection back to the preceding track.

ALL

This key selects both audio tracks for calibration. It does NOT select the time code track.

1.3.4 Parameter Selection

The ten parameter selection keys are located on the **REPRO** (3 keys), **SYNC** (3 keys), **INPUT** (1 key), **RECORD** (2 keys) and **BIAS** (1 key) sections in the upper left corner of the panel. These sections are discussed below.

REPRO

The three keys in this section are used in calibrating the reproduction circuitry.

LEVEL

This key selects the **REPRO** output level for calibration. A secondary function is associated with this key, this being **RGC** (REPRO GAP COMPENSATION).

L. FREQ

Selects **REPRO** Low Frequency Equalization adjustment.

H. FREQ

Selects **REPRO** High Frequency Equalization adjustment.

SYNC

The three keys in this section are used in calibrating the **SYNC** circuitry.

LEVEL

This key selects the **SYNC** output level for calibration. The secondary function for this key is **SGC** (SYNC GAP COMPENSATION).

L. FREQ

Selects **SYNC** Low Frequency Equalization adjustment.

H. FREQ

Selects **SYNC** High Frequency Equalization adjustment.

INPUT

The **INPUT** section has only one key.

MON LVL

With this key selected, the **INPUT** level is chosen for adjustment.

RECORD

The two keys in this section are used in calibrating the RECORD circuitry.

LEVEL

Selects RECORD level for calibration. Pressing this key also causes the selected track(s) to enter the RECORD READY Mode. This key also controls the secondary function **RCF** (RECORD FEED FORWARD).

H. FREQ

Selects the record circuitry High Frequency gain for calibration. Also controls the secondary function **RCB** (RECORD FEED BACK).

BIAS

The **BIAS** section also has only one key.

LEVEL

When this key is selected the bias signal amplitude is selected for adjustment.

1.3.5 Audio Parameter Calibration Adjustment

The **CALIBRATION** section of the panel has two keys which are used to make the desired adjustments after both the track and the parameter have been defined.

DEC

The first operation of this key causes the selected parameter to start decrementing at a rate of about 1 dB per second. Decrementation continues until either the end of the range (00) is reached or until DEC is pressed again. Rapid decrementing can be performed by holding down the CONTROL key and pressing DEC .

INC

The first operation of this key causes the selected parameter to start incrementing at a rate of about 1 dB per second. Incrementation continues until either the end of the range (FF) is reached or until INC is pressed again. Rapid incrementing can be performed by holding down the CONTROL key and pressing INC .

NOTE: When incrementing the parameters **RECORD** H. FREQ , **REPRO** L. FREQ , or **SYNC** L. FREQ , the value displayed on the **STATUS** Display becomes lower, even though the audio level is increasing. Similarly, decrementing these three parameters causes the displayed value to become greater as the audio level becomes lower. This is true only for these three adjustments. All others will show increasing values when incremented and reducing values when decremented.

1.3.6 Equalization Standards

The three Equalization Standard keys are located on the **EQ STD** section of the panel. The Equalization Standard for the audio tracks can be changed only when ALL is selected on the **TRACK** Section of the panel, and that for the Time Code track can be changed only when the Time Code track is selected.

NAB

This key selects NAB equalization for the audio tracks. NAB cannot be selected for a transport operating at 30 ips, because no NAB equalization standard exists for this speed.

IEC

This key selects **IEC**, and is the default value for 30 ips operation.

TC

This key selects a special equalization standard which is best suited for digital data stream transmissions such as Time Code or automation data. This equalization is totally unsuitable for the audio channels and should be used only for the Time Code track.

1.3.7 Alignment Presets

The three PRESET keys are located along the upper right edge of the panel, and these are used for storing alignment-related data into memory for later recall. These memory functions are used to allow for multiple tape formulation, alternative reference fluxivities, alternative over-bias settings, alternative equalization standards, or any desired combinations of the above.

In addition to the PRESET keys, the CONTROL and STORE keys also are used in the storage process.

Nine memory locations are provided for any given headstack, this allowing three locations for each of the three tape speeds, and the User Label provides a means of recording the parameters stored for a specific headstack.

CONTROL

This key calls up the secondary functions for those keys marked with blue silkscreen labels. These secondary functions become valid only when ALL channels are selected and CONTROL is pressed.

CONTROL also is used to arm the STORE function. When CONTROL is pressed simultaneously with STORE (in the same manner as the shift key on a typewriter), it causes the STORE function to become armed, this being indicated by the illumination of the STORE key.

STORE

This key is used to store the current adjusted values into one of the three PRESET memory locations.

As a safety feature, this key can be activated only in conjunction with CONTROL . When the function is armed, (CONTROL and STORE pressed simultaneously) the STORE key becomes illuminated, and pressing any PRESET key erases the previously stored data and replaces it with the current adjusted value.

PRESET 1 , PRESET 2 and PRESET 3

These PRESET keys are used to either store new data into memory (**STORE** function is armed) or recall previously stored data from memory (**STORE** function

	TAPE TYPE _____ FLUXIVITY _____ nWb/m EQ STD _____ OVERBIAS _____ dB@ _____ kHz	TAPE TYPE _____ FLUXIVITY _____ nWb/m EQ STD _____ OVERBIAS _____ dB@ _____ kHz	TAPE TYPE _____ FLUXIVITY _____ nWb/m EQ STD _____ OVERBIAS _____ dB@ _____ kHz
	TAPE TYPE _____ FLUXIVITY _____ nWb/m EQ STD _____ OVERBIAS _____ dB@ _____ kHz	TAPE TYPE _____ FLUXIVITY _____ nWb/m EQ STD _____ OVERBIAS _____ dB@ _____ kHz	TAPE TYPE _____ FLUXIVITY _____ nWb/m EQ STD _____ OVERBIAS _____ dB@ _____ kHz
	TAPE TYPE _____ FLUXIVITY _____ nWb/m EQ STD _____ OVERBIAS _____ dB@ _____ kHz	TAPE TYPE _____ FLUXIVITY _____ nWb/m EQ STD _____ OVERBIAS _____ dB@ _____ kHz	TAPE TYPE _____ FLUXIVITY _____ nWb/m EQ STD _____ OVERBIAS _____ dB@ _____ kHz

Figure 1-6. User Label

NOT armed). Where PRESET data is being used, this is indicated by the appropriate PRESET key remaining illuminated.

NOTE: If any PRESET key for which there is no previously stored value is pressed, the **STATUS** Display will indicate "PE" (Preset Error).

1.3.8 User Label

The User Label (Figure 1-6) provides a pre-formatted writing surface which can be used to record the results of a particular calibration. Nine alternative alignments are available, three for each tape speed. Since these software calibrations are unique to each headstack, this user card travels with its corresponding headstack. When tape format, head and guide changes are required, the label changes accordingly. Once calibrated for a particular headstack these calibrations need not be repeated each time a format change is required. The headstack identification code allows the machine to call up the correct grouping of alignment presets.

1.3.9 Speed Select Keys

The Speed Select keys, HI SPEED, MID SPEED and LOW SPEED, are located directly to the left of the User Label. These keys offer an alternative to the SPEED key as a means of entering the desired transport speed. However, unlike SPEED (which is used to cycle through all of the available speeds), each of these keys selects a separate transport speed. As an indication of the selected speed, the appropriate Speed Select key becomes illuminated, together with the appropriate **TAPE SPEED** indicator on the Transport Control Panel.

It should be noted that, as a different speed is selected (either at the Alignment Control Panel or with the SPEED key), the stored PRESET and EQ STD parameters are selected automatically to agree with the new speed.

1.3.10 Secondary Functions

As has been previously stated, four of the keys on the Alignment Control Panel have secondary functions, these being denoted by their blue labels. Although not used in normal alignment procedures, these secondary functions allow for adjustments which provide a flexibility rarely encountered in traditional analog recorders.

The secondary functions are activated by holding down CONTROL while pressing the appropriate key. Where a secondary function is selected, both CONTROL and the secondary function key become illuminated to indicate that the secondary function is in effect.

Of the four secondary functions, **RGC** and **SGC** are concerned with adjustments necessitated by differing head gaps. Adjustment of the gap compensation setting normally becomes necessary if heads of significantly different gap-width are used. Further, should extensive relapping of tape heads cause a change in high frequency performance, the gap compensation setting should be adjusted.

The remaining secondary functions, **RCF** and **RCB** are related to the type of tape being used. These alignments are used to adjust the RECORD frequency response so that the playback will be flat over a wide range of diverse tape formulations.

Table 1-3 lists the appropriate settings for various tapes at three different speeds, these settings being given in terms of the hex values shown on the **STATUS** Display.

RGC

REPRO GAP COMPENSATION (**RGC**)is the secondary function associated with the **REPRO** LEVEL key. When RGC is selected, compensation can be made for the high frequency loss caused by the Repro head gap. This is a useful alignment, because it allows headstacks of differing construction and gap widths to be adjusted for optimum performance with a variety of different tape types. For **RGC** settings, refer to the appropriate headstack specifications.

SGC

SYNC GAP COMPENSATION (**SGC**) is the secondary function for the **RECORD** LEVEL key. When SGC is selected, the high frequency loss caused by the Sync head gap can be adjusted out. For **SGC** settings, refer to the appropriate headstack specifications.

TAPE TYPE		30 IPS	15 IPS	7.5 IPS
3M Scotch 226	RCF	C0	CB	C4
	RCB	C1	C7	C4
3M Scotch 250	RCF	C0	CB	C4
	RCB	C2	C7	C4
AGFA 469	RCF	C0	CB	C4
	RCB	C1	C7	C4
Ampex 456	RCF	C0	CB	C4
	RCB	C1	C7	C4
BASF LGR50	RCF	C0	CB	C4
	RCB	C1	C7	C1
AGFA PER528	RCF	C0	CB	C6
	RCB	C2	C7	C2
AGFA LGR30	RCF	C0	CB	C6
	RCB	C2	C7	C2
3M Scotch 176	RCF	C0	C8	C4
	RCB	C2	C7	C4

Table 1-3. RCB and RCF Settings

RCB

RECORD FEED BACK (RCB) is the secondary function for **RECORD** HI-FREQ . This selects the RECORD FEED BACK compensation adjustment.

RCF

RECORD FEED FORWARD (**RCF**) is the secondary function for **RECORD** LEVEL . This selects the RECORD FEED FORWARD compensation adjustment.

1.4 METER HOUSING CONTROLS

This section describes all of the Audio channel and Monitor speaker controls and indicators. These controls, used in conjunction with those on the Transport Control and Alignment Control Panels, comprise all of the audio controls for the **APR-5000**.

1.4.1 Audio Channel Functions

As illustrated in Figure 1-7 , each audio channel is subdivided into six major sections, these being: **ALN** (Alignment Select Indicator), **RECORD**, **MONITOR**, **RECORD LEVEL**, **OUTPUT LEVEL** and **VU** Meter.

ALN

The **ALN** section contains a single, amber **SELECTED** indicator which becomes illuminated to show that this particular audio channel is selected during any adjustment at the Alignment Control Panel. When **ALN** is selected for any channel, all of the controls for that channel, except for **RECORD** READY , become disabled.

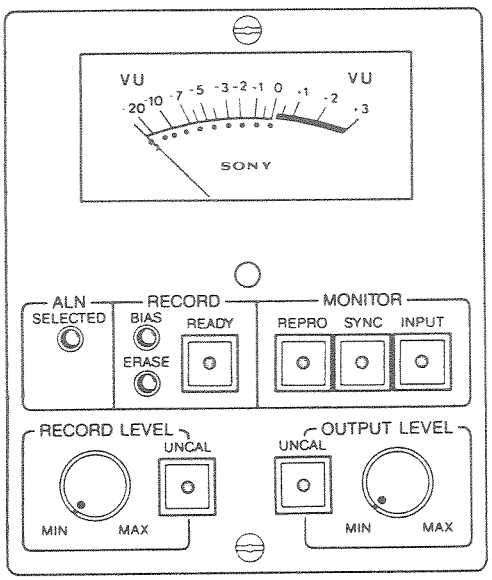

Figure 1-7. Audio Channel Controls

RECORD

The **RECORD** block contains two status indicators and one key. The **BIAS** and **ERASE** indicators become illuminated to show which, if any, of these functions is currently active. During a normal recording operation, both of these indicators become illuminated. During **SPOT ERASE**, the **BIAS** indicator is extinguished to show that the record head bias is turned off, and the **ERASE** indicator is illuminated to show that the erase head is active.

The READY key is used to set the channel into RECORD READY before the transport is placed in RECORD mode. When READY is selected, the key becomes illuminated to indicate that the channel is ready to record.

MONITOR

The MONITOR block contains three keys which are used to select the source of the audio channel output.

REPRO

When REPRO is pressed, it becomes illuminated to indicate that the audio channel output is being derived from the reproduce head.

SYNC

When SYNC is selected, it illuminates to indicate that the audio channel output is being derived from the sync (or cue) head. During a RECORD operation, this will be the same as INPUT. During a PLAY operation, the playback signal will come from the sync head instead of the repro head.

INPUT

When INPUT is selected, the key illuminates to indicate that the audio channel output is derived directly from the audio channel input.

RECORD LEVEL

The recording level can be either internally preset or controlled from the rotary level control on the **RECORD LEVEL** section of the panel, selection between these options being made by means of the UNCAL (UNCALIBRATED) key on the same panel section.

UNCAL

When this key is selected, it becomes illuminated to show that the recording level is UNCALIBRATED, i.e. it can be controlled by adjustment of the **RECORD LEVEL** rotary control. When the UNCAL key is extinguished, the control is ineffective, and the recording level is adjusted by the internal preset level.

OUTPUT LEVEL

The **OUTPUT LEVEL** section is similiar to the **RECORD LEVEL** section, differing only in that it controls the channel's audio output level rather than its recording level.

VU Meter

Each audio channel incorporates a **VU** Meter with a range of −20VU to +3VU. The meters are preset at the factory so that an indication of 0 VU corresponds to a level of +4 dBu. (0dBu = 0.775 vrms). If so desired, this reference can be changed by an adjustment on the CNL (channel) board, the procedure being as given in the **APR-5000** Operation and Maintenance Manual.

The **VU** Meter monitors the signals selected at the **MONITOR** section, i.e. when INPUT is selected, the **VU** Meter indicates the audio channel input level, etc.

1.4.2 Monitor Speaker

The machine is fitted with a Monitor Speaker whose output is derived from the signal(s) displayed on the **VU** Meter(s). Track 1, Track 2, or both tracks can be selected by pressing the appropriate key(s), these keys becoming illuminated to indicate the track(s) being monitored. When both keys are selected, the input signals are summed in the monitor amp. The **LEVEL** control is used to adjust the volume of the monitored signal.

1.5 STORAGE LOCATION RELATED OPERATIONS

Paragraphs 1.5.1 through 1.5.4 describe various Storage Location related operations, these being RESOLVE ON PLAY, PREVIEW/EDIT/REVIEW, TRIGGERED EDIT SYNCHRONIZATION and FIND. All of these operations require argument or time entries into various Storage Locations. Paragraphs 1.6 through 1.6.4 give the specific procedures used for making these entries.

1.5.1 RESOLVE ON PLAY

The PLAY operation can be preset to RESOLVE, which establishes and maintains data independent synchronism between between the Time Code from tape and some external reference. Being data independent, this occurs in a manner which is independent of any offset. The external reference can be either Longitudinal Time Code (LTC) or a video signal or ex-

INPUT SIGNAL	TIME CODE ON TAPE			
	SMPTE NDF	SMPTE DF	EBU	FILM
LTC @ 30 f/s	Resolve	+0.1%	n/a	n/a
60 Hz NTSC B¿W Video	Resolve	+0.1%	n/a	Resolve*
LTC @ 29.97 f/s	−0.1%	Resolve	n/a	n/a
59.54 Hz NTS Color Video	−0.1%	Resolve	n/a	−0.1%*
LTC @ 25 f/s	n/a	n/a	Resolve	n/a
50 Hz PAL/SECAM Video	n/a	n/a	Resolve	n/a
LTC @ 24 f/s	n/a	n/a	n/a	Resolve

***NOTE:** One of the most interesting applications of RESOLVE ON PLAY is the ability to resolve 60 Hz input reference signals to the 24 f/s Film Time Code, by maintaining a 4:5 Time Code to reference signal resolving ratio.

Table 1-4. Resolve Capabilities

ternal tone. RESOLVE ON PLAY is initiated by presetting Storage Locations 37 and 39 as follows:

Storage Location 39	Set to 1 to initiate the mode
Storage Location 37	Set to 0 for Longitudinal Time Code reference Set to 1 for Video signal or Tone reference

1.5.1.1 Resolve Capabilities

Table 1-4 shows the resolve capabilities of the machine. The percentage values in the table indicate the deviation from the nominal recorded tape speed at which the transport will operate in Play-Resolve mode. The non-applicable (n/a) pairings shown in the table are those with more substantially mis-matched clock rates. These pairings do not provide reliable or repeatable results.

1.5.2 PREVIEW, EDIT AND REVIEW

These facilities provide a series of editing operations, as follows:

PREVIEW — Allows the user to rehearse the edit, without actually recording the changes.

EDIT — Performs the edit and records the results.

REVIEW — Allows the user to monitor the results of the edit.

In any of the editing modes, IN POINT, OUT POINT, PREROLL DURATION and POSTROLL DURATION must be defined:

IN POINT	— Start of edit
OUT POINT	— End of edit
PREROLL DURATION	— Time that tape rolls before the IN POINT is reached.
POSTROLL DURATION	— Time that tape continues to roll after the OUT POINT is passed.

It should be noted that, where no IN POINT, OUT POINT, PREROLL DURATION and/or POSTROLL DURATION values are entered, these parameters will default to the most recent values entered into the appropriate Storage Locations.

Initiating PREVIEW, EDIT or REVIEW causes the following events to occur:

PREVIEW and EDIT causes both audio channels to monitor the Sync head.

REVIEW causes both audio channels to monitor the Repro head.

In PREVIEW and REVIEW, the PLAY key flashes to indicate that the operation is cued and ready to perform the remainder of the process.

In EDIT, the PLAY and RECORD keys flash to indicate that the operation is cued and ready to perform the remainder of the process, which may include a RECORD operation.

1.5.2.1 PREVIEW

The PREVIEW facility provides a rehearsal mode in which the user can adjust the IN POINT, OUT POINT, PREROLL DURATION and POSTROLL DURATION for an edit. In PREVIEW, the recording facility is inhibited globally, and the Record-Readied tracks do not enter RECORD.

The following procedure is used to initiate PREVIEW. Additional steps relating to fine adjustment of the IN POINT and OUT POINT are given in paragraph 1.5.2.1.1

STEP 1 Set the desired audio channel(s) into RECORD READY.

STEP 2 Enter the desired IN POINT time into Storage Location 01.

STEP 3 Enter the desired OUT POINT time into Storage Location 02.

STEP 4 Enter the PREROLL DURATION time into Storage Location 51.

STEP 5 Enter the POSTROLL DURATION time into Storage Location 52.

STEP 6 Set Storage Location 95 to 1 to enable PREVIEW. At this time the machine automatically cues to the appropriate preroll position ahead of the IN POINT. Once the machine is cued, the PLAY key flashes on and off to indicate that the machine is ready.

NOTE: The machine is preprogrammed with an Acceleration Allowance which allows time for the transport to reach the selected speed. Because of this, the machine always cues to a position slightly ahead of the nominal preroll point.

STEP 7 Press PLAY to start the PREVIEW operation. It should be noted that the operation can be cancelled at any time by pressing STOP .

NOTE: The PREVIEW, EDIT AND REVIEW operations can be actuated by an external Time Code trigger. This method of operation is described in paragraph 4.5.3.

1.5.2.2 IN POINT and OUT POINT Bit Delays

To allow for very precise settings, the IN POINT and OUT POINT times can be delayed for up to one frame in one-bit (1/80th frame) increments. A number (up to 79) entered into Storage Location 91 causes the IN POINT to be delayed by that number of bits. Similarly, a number (up to 79) entered into Storage Location 92 delays the OUT POINT.

1.5.2.3 EDIT

The EDIT operation is similar to PREVIEW in that IN POINT, OUT POINT, PREROLL DURATION, and POSTROLL DURATION are set in the same manner, but differs in that the results of the EDIT become recorded.

The procedure for initiating EDIT remains the same as for PREVIEW, except that STEP 6 becomes:

STEP 6 Set Storage Location 96 to 1 to enable EDIT. At this time the machine automatically cues to the appropriate preroll position ahead of the IN POINT. Once the machine is cued, the PLAY and RECORD keys flash on and off to indicate that the machine is ready.

1.5.2.4 REVIEW

REVIEW allows the user to listen to the results of the edit after it is completed. To initiate the review, the IN POINT, OUT POINT, PREROLL DURATION and POSTROLL DURATION parameters are left unchanged after the edit. All that is required is to set Storage Location 97 to 1 and then, when the PLAY key begins to flash, press PLAY .

1.5.3 TRIGGERED EDIT SYNCHRONIZATION

Any of the three Edit sequences can be actuated automatically by being triggered from the external reference. In this mode, it it not necessary to set the audio tracks into RECORD READY, and the IN POINT and OUT POINT only define the duration of the synchronous operation.

It is most important to note that, for successful operation in this mode, the external reference must be presented to the machine in a reasonably accurate real time manner during the preroll time period.

The procedure used to enter TRIGGERED EDIT SYNCHRONIZATION is as follows:

STEP 1 Enter the desired OFFSET, IN POINT, OUT POINT, PREROLL DURATION and POSTROLL DURATION times into storage Locations 00, 01, 02, 51 and 52 respectively.

STEP 2 Set Storage Location 43 to 1 to enable TRIGGERED EDIT SYNCHRONIZATION.

STEP 3 Set Storage Location 37 to the appropriate ESTABLISH LOCK reference.

0 = Longitudinal Time Code
1 = Vertical Interval Time Code

(This selects the source from which the machine establishes synchronism ahead of the IN POINT.)

STEP 4 Set Storage Location 38 to the appropriate MAINTAIN LOCK reference. (This selects the source from which the machine maintains lock after the IN POINT.)

0 = External LTC, Data Independent
1 = External LTC, Data Dependent
2 = Video signal or external Tone, Data Independent
3 = VITC, Data Dependent

STEP 5 Set the appropriate Storage Location to 1 to actuate the desired facility.

Storage Location 95 = PREVIEW
Storage Location 96 = EDIT
Storage Location 97 = REVIEW

As STEP 5 is completed, the machine automatically cues to the appropriate position ahead of the IN POINT. Once the machine is cued, the PLAY key flashes on and off, and the machine begins to monitor the ascending Time Code reference (Establish Lock Reference). At Lock Actuation Time the controlled device is triggered automatically to synchronize its own internal LTC from tape with the selected External Time Code reference. Figure 1-8 illustrates the TRIGGERED EDIT SYNCHRONIZATION operation.

The Lock Actuation Time is defined as follows:

Lock Actuation Time = IN POINT
– (PREROLL DURATION + SYNC OFFSET)

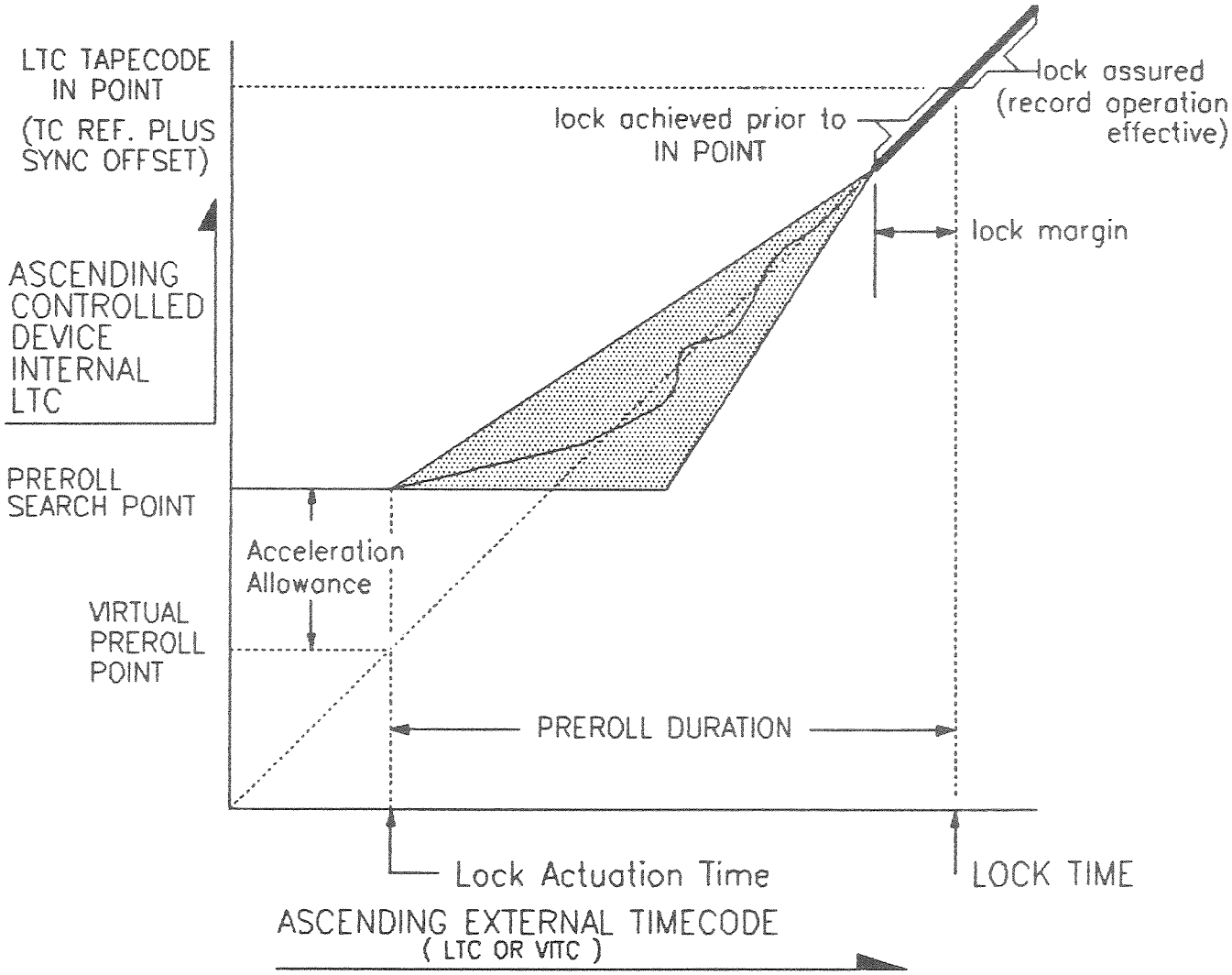

Figure 1-8. Triggered Edit Synchronization

1.5.4 FIND

Some tapes may include a number of live action audio sequences, each starting with a different Longitudinal Time Code. This is frequently the case where audio for Film is recorded, each Take starting with with a Time Code which corresponds to the time of day at which it was recorded. Consequently, these sequences begin at widely separated time-of-day start points.

FIND is a feature that aids in the LOCATE process, allowing speedy access to a Time Code location among any number of discontiguous Takes.

At full speed wind, the **APR-5003V** does not read Time Code, but interpolates Time Code from the counter roller. When performing a LOCATE, FIND enables the machine to slow down periodically, sample the tape Time Code, and update it's interpolated position. Each time the transport is required to change LOCATE direction, the distance between samples is halved, and, in this manner, the transport can approach its target location quickly and accurately.

FIND can be activated by setting Storage Location 93 to any value other than 0. For speediest operation, it is desirable to set the Storage Location to a value roughly equal to the length (in minutes) of the Take durations on the tape. (Values greater than 10 will be truncated internally to a value of 10.) The preset value is not critical in any way, since the FIND process itself is not critical, but presetting the duration between the Time Code updates allows the process to be performed in a shorter time.

1.5.4.1 FIND Operation

The following procedure presupposes a situation in which the user wishes to find the audio corresponding to the film starting at 15:12:02:00, on a tape which has many Takes of about 3:20 minutes each. Intermixed with these Takes, there are several which were cut to be significantly shorter.

The procedure to be used in this instance would be:

STEP 1 Set Storage Location 93 to 3 to enable FIND.

STEP 2 Enter the desired LOCATE time of 15:12:02:00.

STEP 3 Press LOCATE . This causes the machine to locate to the desired tape position, regardless of the breaks in the Time Code data.

1.6 STORE/RECALL SEQUENCE OPERATIONS

The following paragraphs define the procedures to be used for STORE and RECALL operations. It should be noted that procedures differ somewhat for different Storage Locations, but that all procedures have these two things in common when entering the two-digit Storage Location codes

a. If the first digit is entered incorrectly, RCL (or STO) can be pressed and the entry can be started again.

b. If more than three seconds elapses between entering the first and second digits, **LOCATE TIME** will revert to is former display.

A complete index of Storage/Recall Registers is given in Appendix A to this Supplement.

1.6.1 Locations 00 through 29 — Position Registers
Location 50 — Acceleration Allowance Preset
Location 51 — PREROLL DURATION Preset
Location 52 — POSTROLL DURATION Preset

For these Storage Locations, the STORE and RECALL functions are separate entities and can be invoked independently.

1.6.1.1 RECALL Procedure

STEP 1 Press RCL .

STEP 2 At the Numeric Keypad, enter the two digits representing the desired Storage Location. The two-digit code becomes displayed for a short time, then the display shows the value currently stored in the selected Storage Location.

1.6.1.2 STORE Procedure

STEP 1 Verify that the time data to be stored is shown in the **LOCATE TIME** display. (This may be recalled data or newly entered data.)

STEP 2 Press STO . Note that the time data remains displayed.

STEP 3 At the Numeric Keypad, enter the two digits representing the desired Storage Location. The two-digit code becomes displayed for a short time, then the display shows the time data which has been stored in the selected Storage Location.

It should be noted that this data is non-volatile, and remains in memory, even when machine power is removed.

1.6.2 Locations 30 through 49 — Enables and Selects

Location 91 — IN POINT Bit Delay
Location 92 — OUT POINT Bit Delay
Location 93 — FIND Enable
Location 95 — PREVIEW Enable
Location 96 — EDIT Enable
Location 97 — REVIEW Enable

For any of these locations, a new argument can be entered only after the current stored value has been reclaimed.

1.6.2.1 RECALL and/or STORE Procedure

STEP 1 Press RCL .

STEP 2 At the Numeric Keypad, enter the two-digit number for the desired Storage Location. The **LOCATE TIME** display shows the entered number, then immediately changes so as to show both the Storage Location number and the previously stored argument.

STEP 3 Within ten seconds, enter the new argument on the Numeric Keypad, then press STO .

STEP 4 If it is desired to retain the previously stored argument in the Storage Location, no action should be taken for STEP 3. In this event, the **LOCATE TIME** display reverts to its original indication after ten seconds, and the previously stored value is retained in the Storage Location.

1.6.3 Location 98 — BIT BUMP

BIT BUMP is a special operation that allows Synchronization Offsets to be set with an accuracy of 1/80th of a Frame. This facility is adjusted by means of the MVC control rather than by entry at the Numeric Keypad.

1.6.3.1 Adjustment Procedure

To adjust the BIT BUMP value, first press RCL and enter 9 8 on the Numeric Keypad. This recalls the contents of Storage Location 98 in the format:

Ss.Ff -Bb-

Where: S = Tens of seconds
s = seconds
F = Tens of frames
f = Frames
— = Dash
B = Tens of bits] (Modulo 80)
b = bits]
(preceded by a minus sign for negative values).

The seconds and frames in this display represent the seconds and frames portion of the Synchronization Offset, and any change made to this value results in a concomitant change in the contents of Storage Location 00.

NOTE: Within the machine, the Bit Offset resolution is considerably finer than 1/80th of a frame, and the displayed frame count is a rounded-off number.

To change the contents of the display, press MVC to the right for an increment or to the left for a decrement. Changes that overflow the modulo 80 bit count upward increment the frame count, and changes that overflow downward decrement the frame count. If it is desired to clear the sub-frame offsets, this can be accomplished quickly by pressing 0 on the Numeric Keypad.

Once the desired offset is displayed, press STO and enter 9 8 on the Numeric Keypad to store the new offset into Storage Location 98. It is important to note that, even where the BIT BUMP value remains unchanged, STO 9 8 must be entered to escape the display.

NOTE: All sub-frame offsets become cleared automatically when RESOLVE ON PLAY (paragraph 1.5.1) is actuated. This is a safety feature which ensures that the important Video to tape LTC framing relationship is preserved.

1.6.4 Location 99 — Offset Calculation

Offset Calculation is a special operation that allows the offset between the Master Time Code and the tape Time Code to be captured. This data can be displayed for identification and/or subsequent storage in any of those Storage Locations whose contents are time values.

1.6.4.1 Offset Capture and Display

To capture and display the offset, first press RCL , then enter 9 9 on the Numeric Keypad. The **LOCATE TIME** display now shows the offset between the Master and tape Time Codes.

1.6.4.2 Offset Capture, Display and Store

To capture and display the offset, and then store it into Location 00 (Synchronization Offset), all that is required is to capture, as described in paragraph 4.6.4.1, then press STO and enter 9 9 on the Numeric Keypad.

SECTION 2
OPERATION

2.1 MACHINE OPERATIONS

2.1.1 Mounting the Reels

The machine can accomodate plastic or metal reels with diameters ranging from 3 inches to 12.5 inches. Depending upon the size of the reel flange, which varies between reels of different manufacture, some reels may require the use of rubber reel platter shims (supplied accessory), these being inserted between the reel and the reel platter to center the tape between the reel flanges.

Reels with diameters ranging from 3 inches to 7 inches are mounted directly on the reel transport spindle (see Figure 2-1), and the reel hubs are installed to secure the reel to the platter. For the larger 10.5-inch to 12.5-inch NAB type reels, the reel hubs are installed first, and the reels then are seated directly on the hubs.

2.1.2 Threading the Tape

Figure 4-10 illustrates the tape path through the transport. When correctly installed, the tape should ride smoothly across the various rollers, the headstack, and the flutter damping arm.

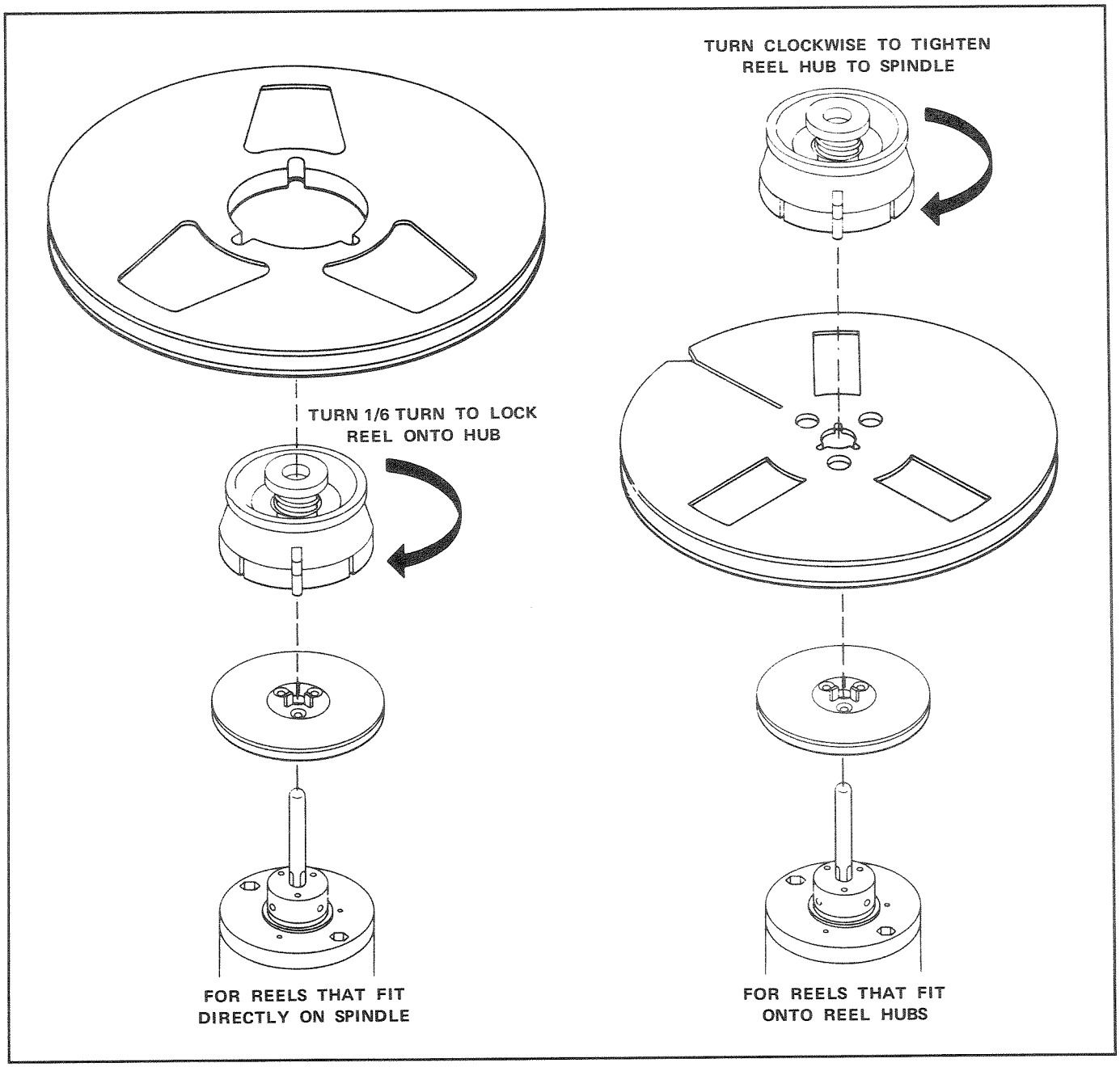

Figure 2-1. Mounting the Reels

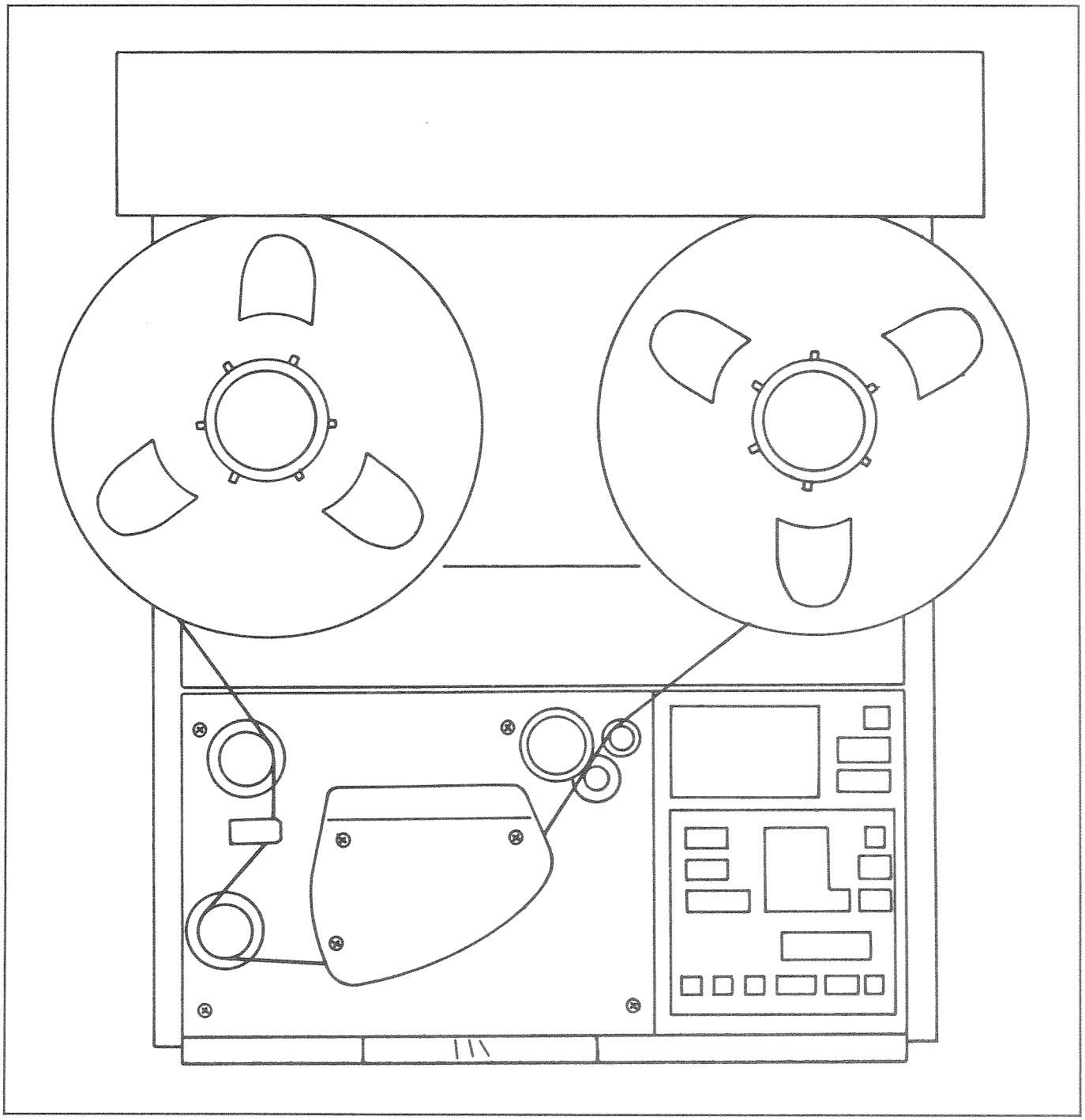

Figure 2-2. Tape Path

2.1.3 Transport Control

2.1.3.1 Fast Wind Modes

This paragraphs describes the modes in which the tape is moved from reel to reel at high speed. All of the mentioned controls and indicators are illustrated in Figure 1-1.

FAST FORWARD — To advance the tape to a forward position, press FF . This causes the tape to fast wind from the supply reel to the takeup reel.

REWIND — To move the tape in the reverse direction, press REW . This causes the tape to fast wind back from the takeup reel to the supply reel.

LOCATE — To wind to a specific position on the tape, enter the time for that position into the **LOCATE TIME** display via the Numeric Keypad, and then press LOCATE . This causes the tape to fast wind to the desired position. During the LOCATE operation, depending upon the direction of wind, either FF or REW becomes illuminated.

During any fast winding mode, the lifters automatically come forward to lift the tape off the heads, this being done to avoid subjecting the tape to unnecessary wear and tear. If so desired, the LIFTER key can be pressed during fast wind to allow the tape to ride across the heads.

Where it is desired to ensure that the tape be packed more evenly on the reel, SPOOL mode can be entered from any of the fast wind modes by simply touching the MVC control while the tape is winding.

2.1.3.2 MVC Operation

The MVC control can be used to shuttle the tape back and forth while the transport is in STOP mode. Tilting MVC to the left causes the tape to rewind, and tilting it to the right causes the tape to wind forward, the speed of the wind depending upon the distance through which the control is tilted. It should be noted that the lifters cannot be defeated while winding or rewinding in MVC mode.

2.1.4 PLAY

The various requirements of a PLAY operation are given in paragraphs 2.1.4.1 and 2.1.4.2. Unless otherwise stated, all of the mentioned controls and indicators are illustrated in Figures 1-1 and 1-7.

2.1.4.1 Initial Setup

STEP 1 Connect the inputs to the mixing console, audio amplifier, or other playback device to the **OUTPUT CH-1** and **OUTPUT CH-2** connectors on the rear panel of the machine.

STEP 2 Set the **POWER** switch to ON and set the audio channels for the desired playback source. This can be either the repro head (select REPRO on the **MONITOR** section) or the sync head (select SYNC on the **MONITOR** section). It should be noted that the repro head gives the better frequency response.

2.1.4.2 PLAY Operation

Before entering PLAY mode, the machine should be cued to the point where RECORD was started. Once the machine is cued, pressing PLAY on the Transport Control Panel initiates the playback, during which the PLAY key is illuminated.

If so desired, the playback level can be adjusted by selecting UNCAL on the **OUTPUT LEVEL** section of the Audio Channel Control Panel. In the UNCALIBRATED mode, the rotary control can be used to set the desired playback volume.

2.1.5 Recording

The various requirements of a RECORD operation are given in paragraphs 2.1.5.1 through 2.1.5.3. All of the mentioned controls and indicators are illustrated in Figures 1-1 and 1-7.

2.1.5.1 Initial Setup

STEP 1 Connect the sources of the material to be recorded to the **INPUT CH-1** and **INPUT CH-2** connectors on the rear panel of the machine.

STEP 2 Set the **POWER** switch to ON and verify that no error message is shown on the **STATUS** Display on the Alignment Control Panel.

STEP 3 Select READY on the **RECORD** section of the Audio Channel Control Panel(s) to set the desired channel(s) into RECORD READY. Verify that the appropriate READY keys become illuminated.

STEP 4 Select INPUT on the **MONITOR** section of the appropriate Audio Channel Control Panel(s).

STEP 5 While watching the **VU** meter, play a section of the material to be recorded and adjust the input level so that the audio peaks cause meter deflections of about 0 VU. The input peaks should never be allowed to cause meter deflections greater than +3 dB. (It is recommended that this adjustment be done using that part of the audio input that has the greatest volume.)

STEP 6 Cue the machine to the desired tape starting position.

2.1.5.2 RECORD Operation

At the Transport Control Panel, press PLAY and RECORD simultaneously. This causes the record-readied channels to enter RECORD mode, as indicated by their **BIAS** and **ERASE** indicators becoming illuminated, together with the PLAY and RECORD keys.

2.1.5.3 Monitoring During Record

During the RECORD operation the user has the option of monitoring either the input material or the repro signal that is being recorded.

To monitor the input signal, either INPUT or SYNC can be selected on the **MONITOR** section of the Audio Channel Control Panel. To monitor the repro signal,

the REPRO key should be selected. The selected function is indicated by the illumination of the appropriate key.

2.1.6 Other Operations

2.1.6.1 SPOT ERASE

The SPOT ERASE operation provides a method of erasing a section of tape with the transport under manual control. Use the following procedure:

STEP 1 Set the **POWER** switch to **ON**.

STEP 2 Select READY on the Audio Channel Control Panel for the track to be erased.

STEP 3 At the Numeric Keypad, enter the time for the tape position where the erasure is to be made into the **LOCATE TIME** display, and then press LOCATE on the Transport Control Panel to wind the tape to that position.

STEP 4 Press SPOT on the Transport Control Panel to arm the SPOT ERASE mode. Verify that the SPOT key is flashing.

STEP 5 Press RECORD on the Transport Control Panel. Verify that the SPOT key becomes solidly illuminated, together with the **ERASE** indicator for the selected channel.

STEP 6 Upon completion of STEP 5, the tape tension is released, and the reels can be turned by hand to move the desired section of the tape over the erase head.

STEP 7 When the erasure is completed, press STOP on the Transport Control Panel.

2.1.6.2 REPEAT

The REPEAT function is used to create a "looping mode" in which the same section of the tape is played back repeatedly. The tape section to be repeated is programmed by entering START and STOP times into Storage Locations 28 and 29, respectively. Note that the STOP time must be later than the START time.

The procedure used to enter REPEAT mode is detailed below.

STEP 1 Set up the machine for PLAY mode.

STEP 2 Enter the START time into the **LOCATE TIME** Display.

STEP 3 Press STO 2 8 on the numeric keypad to enter the START time into memory.

STEP 4 Enter the STOP time into the **LOCATE TIME** Display.

STEP 5 Press STO 2 9 on the numeric keypad to enter the STOP time into memory.

STEP 6 Press REPEAT to enter the mode.

STEP 7 Upon completion of the REPEAT operation, press STOP to escape the mode.

Where the START and STOP locations are not known in terms of their Time Codes, the following procedure can be used:

STEP 1 Set up the machine for PLAY mode.

STEP 2 Cue the tape to the desired START point.

STEP 3 Press the DOWN ARROW to transfer **TAPE TIME** into **LOCATE TIME**.

STEP 4 Press STO 2 8 on the numeric keypad to enter the START time into memory.

STEP 5 Cue the tape to the desired STOP point.

STEP 6 Press the DOWN ARROW to transfer **TAPE TIME** into **LOCATE TIME**.

STEP 7 Press STO 2 9 on the numeric keypad to enter the STOP time into memory.

STEP 8 Press REPEAT to enter the mode.

STEP 9 Upon completion of the REPEAT operation, press STOP to escape the mode.

このマニュアルに記載されている事柄の著作権は当社にあり，説明内容は機器購入者の使用を目的としています。
従って，当社の許可なしに無断で複写したり，説明内容（操作，保守等）と異なる目的で本マニュアルを使用することを禁止します。

The material contained in this manual consists of information that is the property of Sony Corporation and is intended solely for use by the purchasers of the equipment described in this manual.
Sony Corporation expressly prohibits the duplication of any portion of this manual or the use thereof for any purpose other than the operation or maintenance of the equipment described in this manual without the express written permission of Sony Corporation.

Le matériel contenu dans ce manuel consiste en informations qui sont la propriété de Sony Corporation et sont destinées exclusivement à l'usage des acquéreurs de l'équipement décrit dans ce manuel.
Sony Corporation interdit formellement la copie de quelque partie que ce soit de ce manuel ou son emploi pour tout autre but que des opérations ou entretiens de l'équipement à moins d'une permission écrite de Sony Corporation.

Das in dieser Anleitung enthaltene Material besteht aus Informationen, die Eigentum der Sony Corporation sind, und ausschließlich zum Gebrauch durch den Käufer der in dieser Anleitung beschriebenen Ausrüstung bestimmt sind.
Die Sony Corporation untersagt ausdrücklich die Vervielfältigung jeglicher Teile dieser Anleitung oder den Gebrauch derselben für irgendeinen anderen Zweck als die Bedienung oder Wartung der in dieser Anleitung beschriebenen Ausrüstung ohne ausdrückliche schriftliche Erlaubnis der Sony Corporation.

APR-5001/5002/5003V
3-711-352-02

Sony Corporation
© 1989

Printed in Japan
1989. 4 11