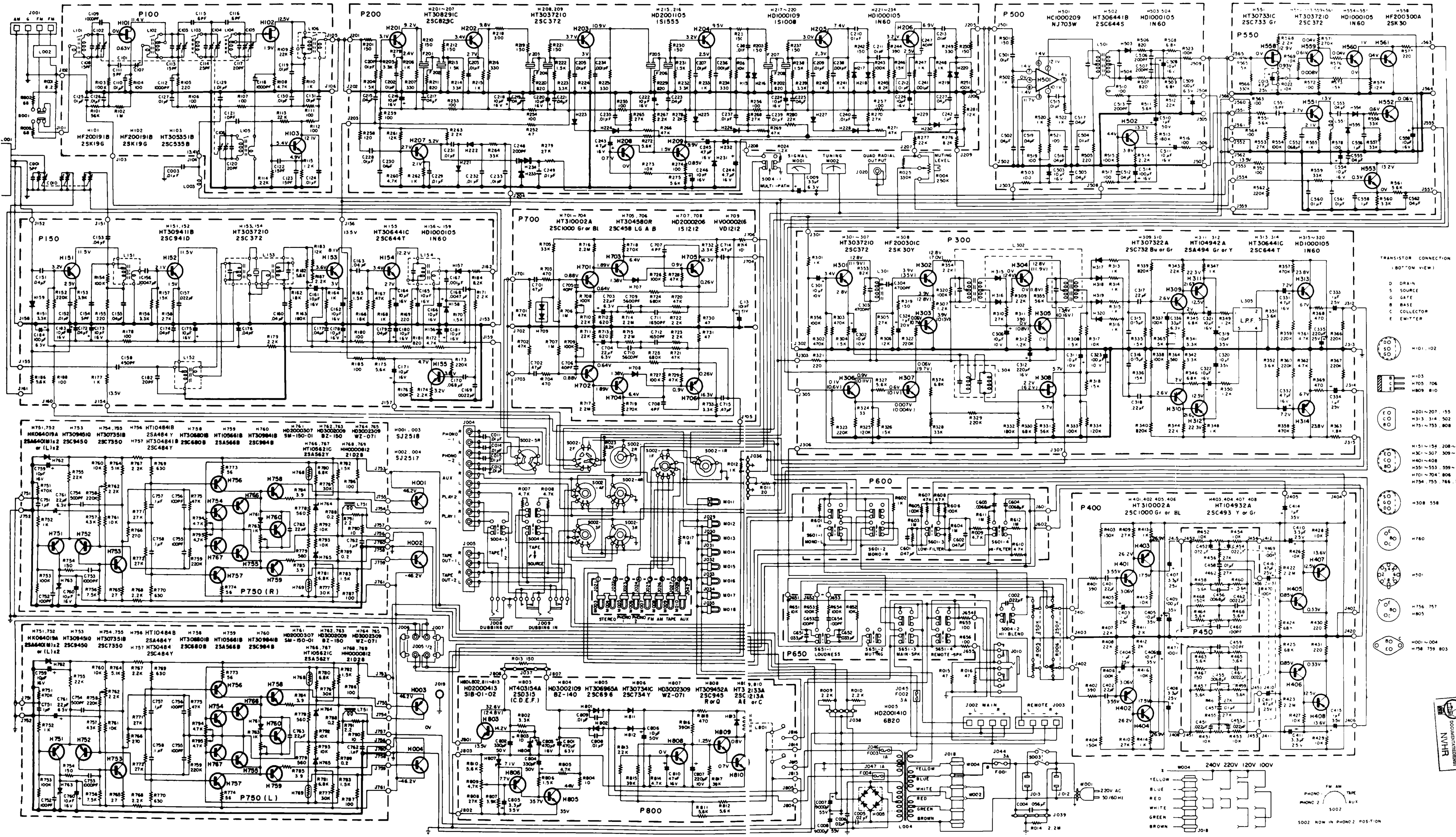

ARCHIEF DOCUMENTATIECENTRUM NVHR

Ned. Ver. v. Historie v/d Radio

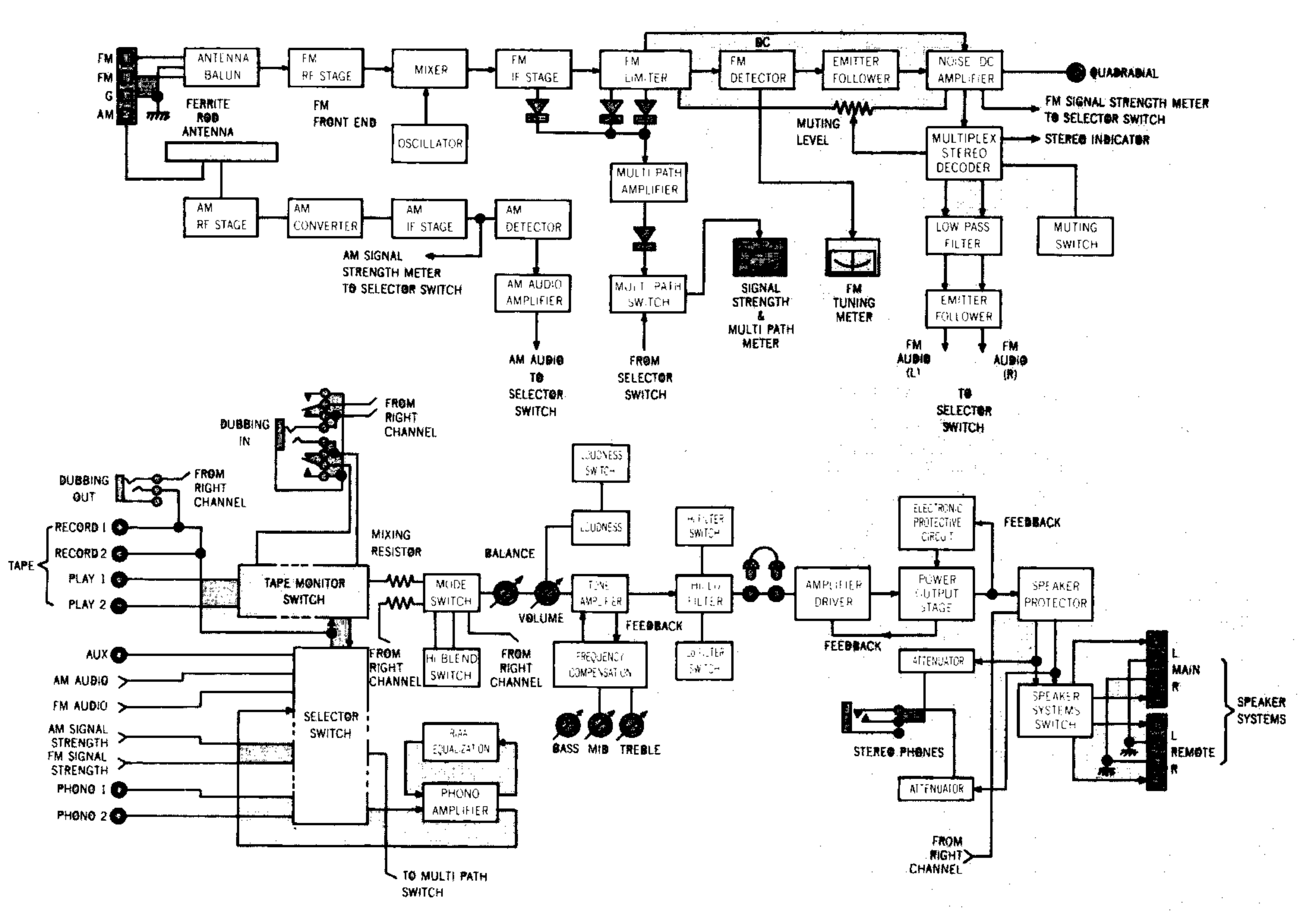
FM
FM
G
AM
ANTENNA BALUN
FERRITE ROD ANTENNA
FM RF STAGE
FM FRONT END
MIXER
OSCILLATOR
FM IF STAGE
FM LIMITER
DC
FM DETECTOR
EMITTER FOLLOWER
NOISE DC AMPLIFIER
QUADRADIAL
FM SIGNAL STRENGTH METER TO SELECTOR SWITCH
MUTING LEVEL
MULTIPLEX STEREO DECODER
STEREO INDICATOR
MULTI PATH AMPLIFIER
AM RF STAGE
AM CONVERTER
AM IF STAGE
AM DETECTOR
AM SIGNAL STRENGTH METER TO SELECTOR SWITCH
AM AUDIO AMPLIFIER
AM AUDIO TO SELECTOR SWITCH
MULTI PATH SWITCH
FROM SELECTOR SWITCH
SIGNAL STRENGTH & MULTI PATH METER
FM TUNING METER
LOW PASS FILTER
MUTING SWITCH
EMITTER FOLLOWER
FM AUDIO (L)
FM AUDIO (R)
TO SELECTOR SWITCH
DUBBING IN
FROM RIGHT CHANNEL
DUBBING OUT
FROM RIGHT CHANNEL
TAPE
RECORD 1
RECORD 2
PLAY 1
PLAY 2
TAPE MONITOR SWITCH
MIXING RESISTOR
MODE SWITCH
BALANCE
VOLUME
LOUDNESS SWITCH
LOUDNESS
TONE AMPLIFIER
FEEDBACK
FREQUENCY COMPENSATION
BASS
MID
TREBLE
HI FILTER SWITCH
HI FILTER
LO FILTER SWITCH
ELECTRONIC PROTECTIVE CIRCUIT
FEEDBACK
AMPLIFIER DRIVER
FEEDBACK
POWER OUTPUT STAGE
SPEAKER PROTECTOR
ATTENUATOR
STEREO PHONES
ATTENUATOR
FROM RIGHT CHANNEL
SPEAKER SYSTEMS SWITCH
L MAIN
R
L REMOTE
R
SPEAKER SYSTEMS
AUX
AM AUDIO
FM AUDIO
AM SIGNAL STRENGTH
FM SIGNAL STRENGTH
PHONO 1
PHONO 2
SELECTOR SWITCH
FROM RIGHT CHANNEL
HI BLEND SWITCH
FROM RIGHT CHANNEL
RIAA EQUALIZATION
PHONO AMPLIFIER
TO MULTI PATH SWITCH