HITACHI
SERVICE MANUAL

TY	No. 587E

TRK-3D60
W,W(UN),AU

TN-21H-982

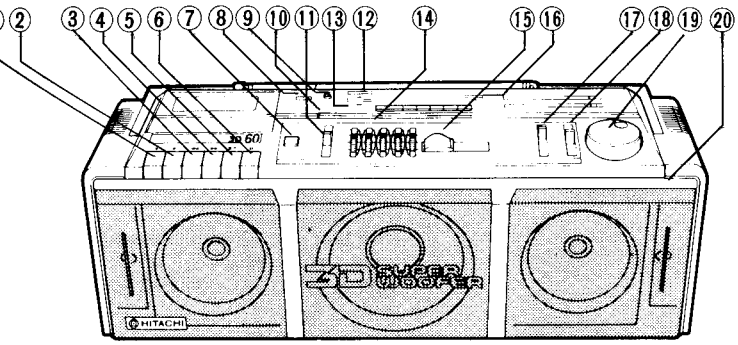

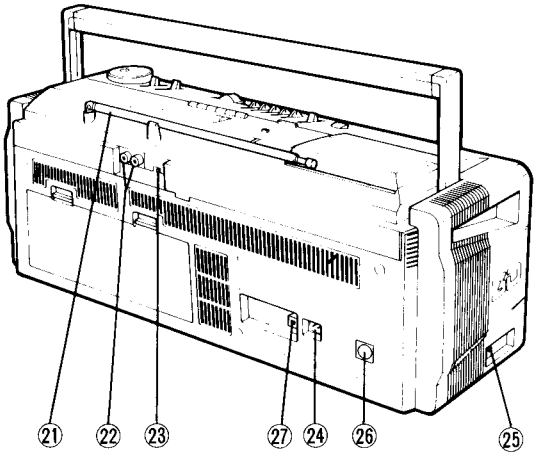

CONTENTS

KEY TO ILLUSTRATIONS 1
SPECIFICATIONS 2
DISASSEMBLY 2
ADJUSTMENT 4
INSPECTION OF MECHANISM 6
LUBRICATION 7
DIAL CORD STRINGING 7
BLOCK DIAGRAM 8
CIRCUIT DIAGRAM 9
PRINTED WIRING BOARD 11
EXPLODED VIEW 13
REPLACEMENT PARTS LIST 15

KEY TO ILLUSTRATIONS

① RECORD BUTTON
② PLAYBACK BUTTON
③ REWIND BUTTON
④ FAST FORWARD BUTTON
⑤ EJECT/STOP BUTTON
⑥ PAUSE BUTTON
⑦ OPERATE SWITCH
⑧ TAPE COUNTER
⑨ RESET BUTTON
⑩ 3D SYSTEM SWITCH
⑪ TAPE SELECTOR
⑫ OPERATION INDICATOR
⑬ 3D SYSTEM INDICATOR
⑭ GRAPHIC EQUALIZER CONTROLS
⑮ VOLUME CONTROL (MAIN)
⑯ FM STEREO INDICATOR
⑰ FUNCTION SELECTOR
⑱ BAND SELECTOR
⑲ TUNING CONTROL
⑳ INNER MICROPHONE (MONAURAL)
㉑ ROD ANTENNA
㉒ CD/LINE IN SOCKET
㉓ FM MODE/RIF/AFC SELECTOR
㉔ AC SOCKET
㉕ HEADPHONES SOCKET
㉖ VOLTAGE SELECTOR [For W]
㉗ DC JACK [For W]

SPECIFICATIONS AND PARTS ARE SUBJECT TO CHANGE FOR IMPROVEMENT.

FM/SW$_2$/SW$_1$/MW RADIO CASSETTE TAPE RECORDER

June 1988 YOKOHAMA WORKS

SAFETY PRECAUTION

The following precautions should be observed when servicing.

1. Since many parts in the unit have special safety-related characteristics, always use genuine Hitachi's replacement parts.
   Especially critical parts in the power circuit block should not be replaced with other makers. Critical parts are marked with ⚠ in the circuit diagram and printed wiring board.
2. Before returning a repaired unit to the customer, the service technician must thoroughly test the unit to ascertain that it is completely safe to operate without danger of electrical shock.

SPECIFICATIONS

General Section

Power supply	110-127/200-220/230-250V, 50/60Hz [W, W(UN)] 240V, 50Hz [AU]
Batteries	DC 15V (IEC R20 x 10 or equivalent)
Power (mains) Consumption	25W
Power output	22W (5W x 2 + 12W) (DC 10%THD)
Dimensions (WxHxD)	562 x 208 x 180 mm
Weight	6.4 kg (including battery)
Semiconductors	ICs: 6 Transistors: 13 Diodes: 18 LEDs: 3

Radio Section

Circuit System	FM/SW_1/SW_2/MW 4-band superheterodyne
Tuning Range	FM: 88 to 108 MHz SW_2: 7.0 to 22.0 MHz SW_1: 2.3 to 7.0 MHz MW: 530 to 1,605 kHz
Sensitivity	FM: 13 dB (pra.), 5 dB (max) SW_2: 30 dB (pra.), 20 dB (max) SW_1: 48 dB (pra.), 35 dB (max) MW: 50 dB (pra.), 35 dB (max)
Intermediate Frequency	FM: 10.7 MHz AM: 455 kHz
Antennas (Aerials)	FM/SW_2: Rod antenna SW_1/MW: Built-in Ferrite-core antenna

Tape Recorder Section

Tape	Compact Cassette (C30, C60, C90)
Tracks system	4-track (2-channel stereo)
Tape Speed	4.75 cm/sec
Recording System	AC bias 57 kHz
Erasing System	Magnet
Playback Frequency Response	Metal tape: 50 to 14,000 Hz (HITACHI ME 90) High bias tape (Chromium tape): 50 to 13,000 Hz (HITACHI SX90, HITACHI EX90) Normal tape: 50 to 12,000 Hz
Signal to Noise Ratio	45 dB
Wow and Flutter	0.25% (WRMS)
Crosstalk	
Between Tracks	55 dB
Between Channels	30 dB
Erasing Ratio	60 dB
Distortion	3%
Head	Permalloy
Motor	Electrical DC micro motor
Input Sensitivity and Impedance	CD/Line in 600 mV, 25 kohms
Output Level and Load Impedance	Headphones 8 ohms to 300 ohms

DISASSEMBLY

1. Cassette Lid (For Only Cassette Lid Assembly) (Fig. 1)

Push the cassette lid arm in the direction of the arrow using a flat-tip screwdriver and pull the cassette lid towards the from to remove it.

2. Installing the Cassette Lid (For Only Cassette Lid Assembly) (Fig. 2)

(1) Securely hook the boss of the cassette lid at the spring as shown in Fig. 2.

3. Top Panel (Fig. 3, 4, 5)

(1) Remove the Ⓐ fixing screws (6) shown in Fig. 3, 4, 5.
(2) Press the EJECT button to open the cassette lid and lift the top panel holding the rod antenna side to remove it.

4. Front Case (Fig. 3, 4, 5, 7)

Remove the Ⓑ fixing screws (11), pull the front case slightly towards you and remove the Ⓐ connector linking the speaker to the PA P.W.B.

5. Cassette Chassis (Fig. 6)

After removing the top panel, remove the Ⓒ fixing screws (4) and connectors and Ⓑ and Ⓒ.

6. MA P.W.B. (Fig. 6)

After removing the top panel, remove the Ⓓ fixing screws (5) and the connectors Ⓑ and Ⓓ.

7. PA P.W.B. (Fig. 7)

After removing the front case, remove the Ⓔ (6), Ⓕ (1) and Ⓖ (2) fixing screws, and connectors Ⓐ, Ⓒ and Ⓔ.

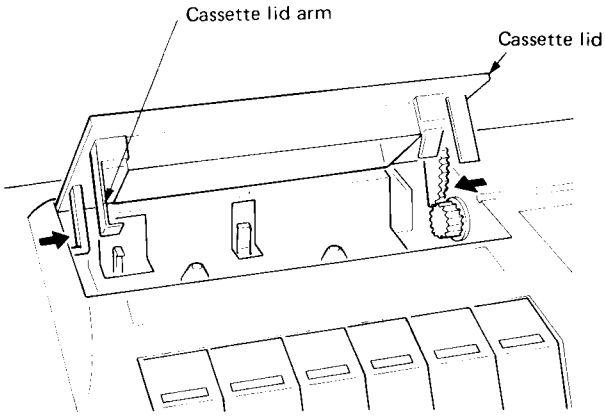

Fig. 1

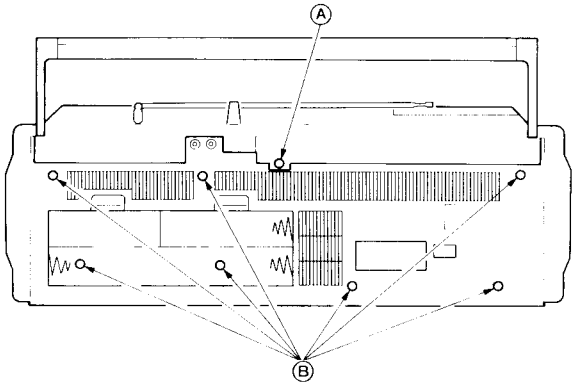

Fig. 5

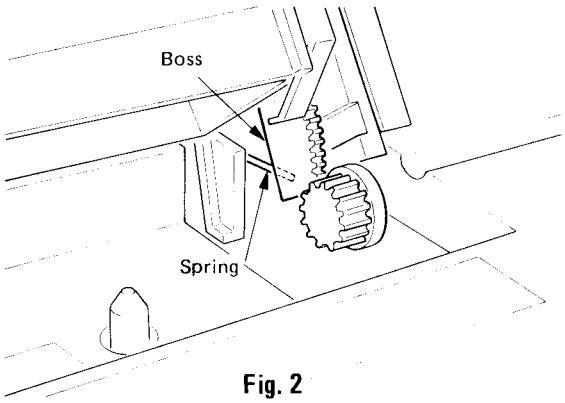

Fig. 2

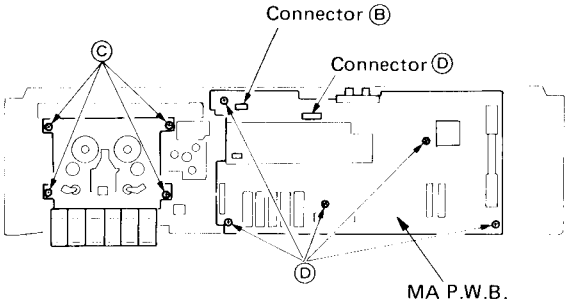

Fig. 6

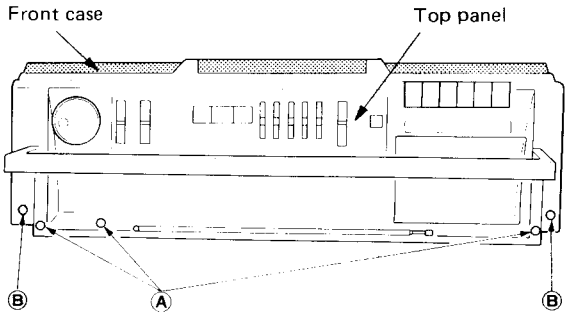

Fig. 3

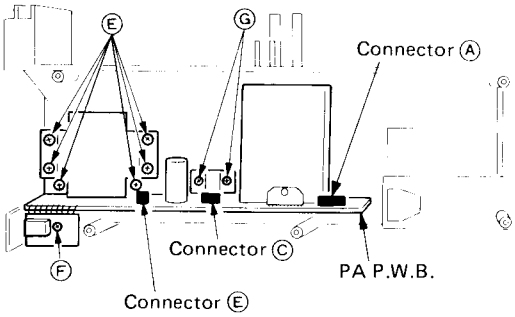

Fig. 7

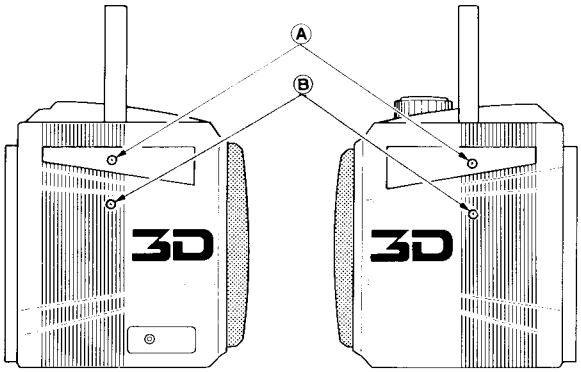

Fig. 4

ADJUSTMENT

ADJUSTMENT PARTS LOCATION

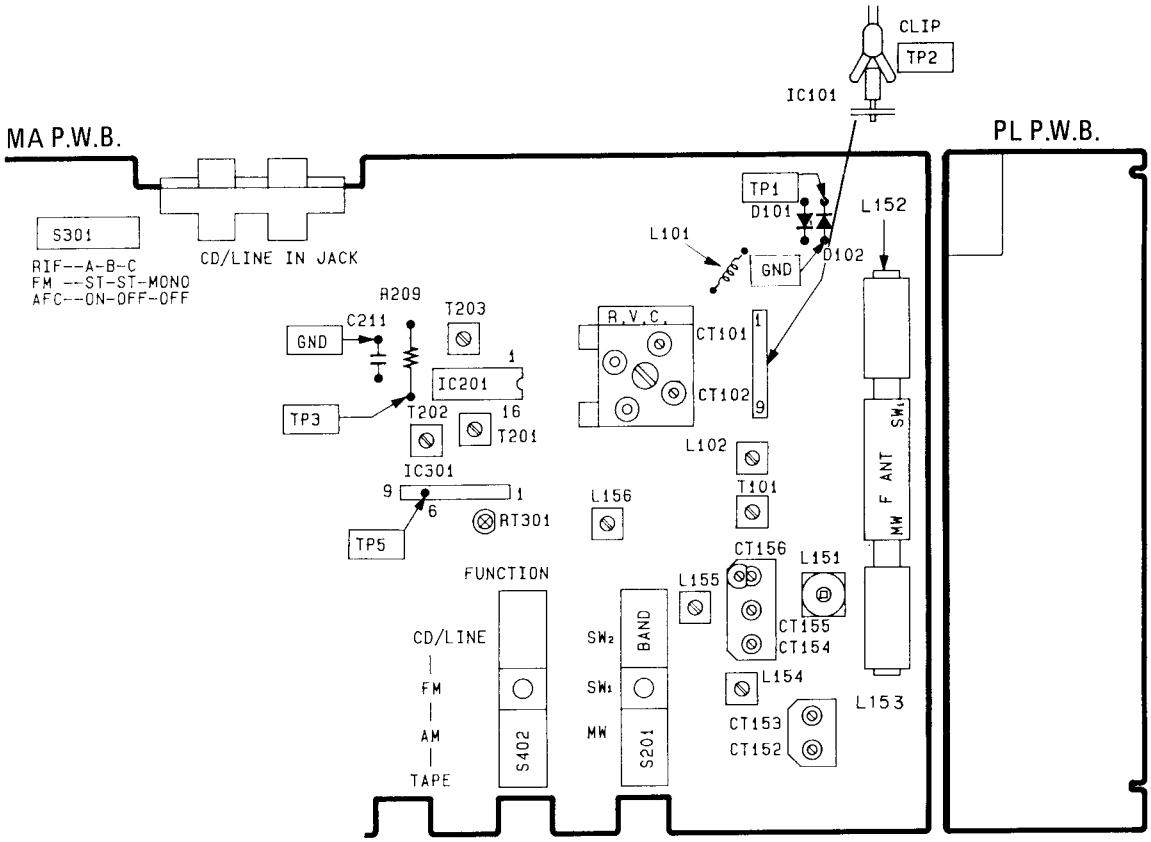

1. Radio Section

FM Section

Step		Adjustment Item	Measuring Instrument and Connection: Measuring Instrument	Input Terminal	Output Terminal	Genescope or Signal Generator Frequency	Dial Pointer Position	Adjust	Reading
1	(1)	FM IF	Turn T202 fully counterclockwise.						
			● Genescope (10.7 MHz)	TP2	TP3	10.7 MHz	Highest	T101	Note 1
	(2)	S-Curve						T202	Note 2
2	(1)	FM OSC (Covering)	● FM signal generator (400 Hz, 30% dev.) ● Oscilloscope ● VTVM	TP1 (thru FM dummy antenna) (Note 3)	TP 3	87 MHz	Lowest	L102	Max
	(2)					109 MHz	Highest	CT102	
	(3)					Repeat steps (1) and (2)			
3	(1)	FM ANT. (Tracking)				90 MHz	90 MHz	L101	Max
	(2)					106 MHz	106 MHz	CT101	
	(3)					Repeat steps (1) and (2)			
4	(1)	FM MPX (Multiplex) free run	● Frequency counter	Connect a 10μF 25V electrolytic capacitor between the No. 1 pin of IC301 and the ground	TP5	—	—	RT301	38 kHz ± 50 Hz (Note 4)

AM Section

Step		Adjustment Item	Measuring Instrument and Connection: Measuring Instrument	Input Terminal	Output Terminal	Genescope or Signal Generator Frequency	Dial Pointer Position	Adjust	Reading
5	(1)	AM IF	● Genescope (455 kHz)	Ferrite-core antenna (Note 5)	TP3	455 kHz	Highest	T201 T203	Note 6
	(2)					Repeat step (1)			
6	(1)	MW OSC (Covering)	● AM signal generator (400 Hz, 30 % mod.) ● VTVM ● Oscilloscope	Ferrite-core antenna (Note 5)	TP3	515 kHz	Lowest	L156	Max.
	(2)					1,650 kHz	Highest	CT156	
	(3)					Repeat steps (1) and (2)			
7	(1)	MW ANT (Tracking)				600 kHz	600 kHz	L153	Max.
	(2)					1,400 kHz	1400 kHz	CT153	
	(3)					Repeat steps (1) and (2)			
8	(1)	SW1 OSC (Covering)	● AM signal generator (400 Hz, 30 % mod.) ● VTVM ● Oscilloscope	Ferrite-core antenna (Note 5)	TP3	2.2 MHz	Lowest	L155	Max.
	(2)					7.3 MHz	Highest	CT155	
	(3)					Repeat steps (1) and (2)			
9	(1)	SW1 ANT (Tracking)				2.7 MHz	2.7 MHz	L152	Max.
	(2)					6.3 MHz	6.3 MHz	CT152	
	(3)					Repeat steps (1) and (2)			
10	(1)	SW2 OSC (Covering)	● AM signal generator (400 Hz, 30 % mod.) ● VTVM ● Oscilloscope	TP1 (thru SW dummy antenna) (Note 7)	TP3	6.7 MHz	Lowest	L154	Max.
	(2)					23 MHz	Highest	CT154	
	(3)					Repeat steps (1) and (2)			
11	(1)	SW2 ANT (Tracking)				8 MHz	8 MHz	L151	Max.

Note:

1. Feed in a weak signal to TP2 from the genescope. Adjust T101 for maximum gain and the waveform indicated in Fig. 8 If the center of the waveform cannot be lined up on the marker, adjust the right/left balance.
2. Use the T202 core to form the S-curve shown in Fig. 9. Adjust the symmetry of A and B about point C for linearity.
3. FM dummy antenna is shown in Fig. 11.
4. Connect the frequency counter to TP5 and connect a 330 kohms resistor TP5 to GND.
5. Connect the output of AM signal generator to the loop antenna, and put it near to the ferrite-core antenna.
6. Feed in a weak signal from the genescope. Adjust T201, T203 for maximum gain and the waveform of Fig. 10.
7. SW. dummy antenna is shown in Fig. 12.

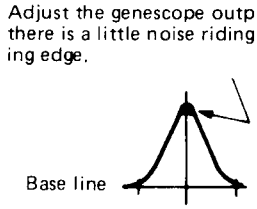

Fig. 8

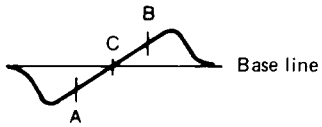

Fig. 9

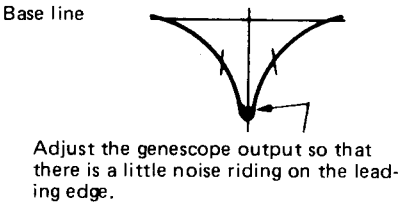

Fig. 10

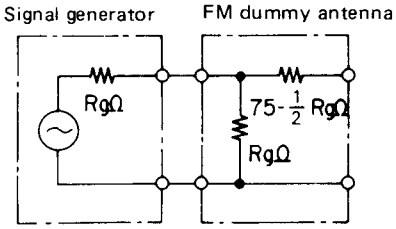

Rg: SG's output impedance

Fig. 11

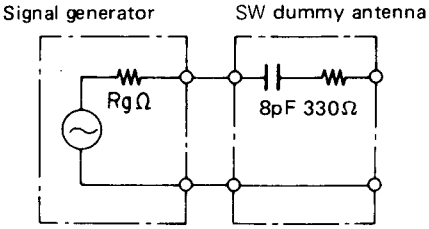

Rg: SG's output impedance

Fig. 12

2. Tape Recorder Section

Perform the following adjustments in the sequence stated after cleaning the head, pressure roller, and capstan with a head cleaning stick moistened in alcohol.

Step	Adjustment Item	Measuring Instrument and Connection			Check Tape	Mode	Adjusted Position	Adjusted Value	Remarks
		Measuring Instrument	Input Terminal	Output Terminal					
1	Tape speed	● Frequency counter	—	Speaker terminal (4Ω load)	Tape speed adjustment tape (3 kHz)	Playback	Semivariable resistor in the motor (Fig. 13)	3 kHz ± 20 Hz	Note 1, 3
2	Head azimuth	● VTVM	—	Speaker terminal (4Ω load)	Head azimuth adjustment tape (10 kHz)	Playback	Azimuth adjusting screw	Output max.	Note 2, 4

Note:

1. Adjsut within 30 sec. after heat-running for more than 20 minutes.
2. When the maximum values of both channels are different, adjust to the maximum value of the L channel. In this case, the difference between the maximum values of both channels should be within 2 dB.
3. Playback the tape in the reverse direction and check if the reading is 3 kHz ± 20 Hz.
   If the reading is outside the range of adjustment value, make readjustment so that the reading would be 2,980 Hz to 3,025 Hz both in the forward and reverse directions.
4. Check that the adjustment value is also satisfied in the reverse direction.

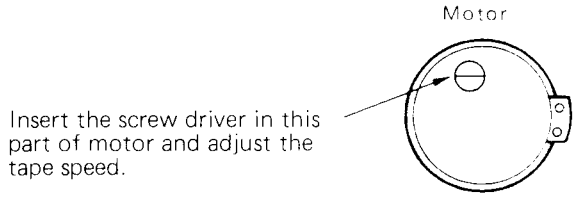

Fig. 13

INSPECTION OF MECHANISM

Item	Checking item		Reference value	Remarks
1	Pressure of pressure roller		300 – 500g	Note
2	Take-up torque		30 – 60 g· cm	
3	Fast forward/Rewind torque		50g·cm or more	
4	Auto-Stop sensor operation force		40 – 75 g	
5	Brake torque		15 g·cm or more	Measured in stop mode
6	Back tension torque	Take-up	1 – 6 g·cm	
		Supply	1 – 4 g·cm	
7	Flywheel thrust gap		0.05 – 0.5 mm	
8	Button operation force	Play button	1.1 kg or less	
		FF button	0.8 kg or less	
		Rewind button	1.1 kg or less	
		Eject button	0.6 kg or less	
		Record button	1.0 kg or less	
		Pause button	1.0 kg or less	

Note:
Set this unit in the playback mode and press the pressure roller in the direction of the arrow using a fan type tension gauge, and measure the pressure when the pressure roller is released form the capstan.

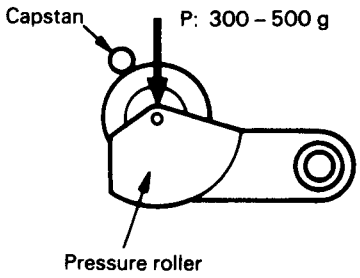

Fig. 14

LUBRICATION

Lubricate one or two drops of oil to rotating point or lubricate grease to sliding point.
Lubricate the respective parts listed once every 1000 hours or once a year under normal conditions of use.
Avoid oiling them excessively, or rotation may become irregular because of oil splashes.

Lubrication point		Oil or Grease
Rotary section	Metal and metal	Pan motor oil (10W-40)
	Mold and metal	Sonic slider oil (# 1600)
Sliding section	Metal and metal	Hitasol (MO-138)
	Mold and mold Mold and metal	White grease (FL-LUBE-A)
Spring resonance prevention		Floil (GB-TS-1)

DIAL CORD STRINGING

Stringing method

1. Turn the pulley fully clockwise.
2. String the dial cord in the direction of the arrow (Nos. 1-9).
3. Set the dial pointer to settting position.

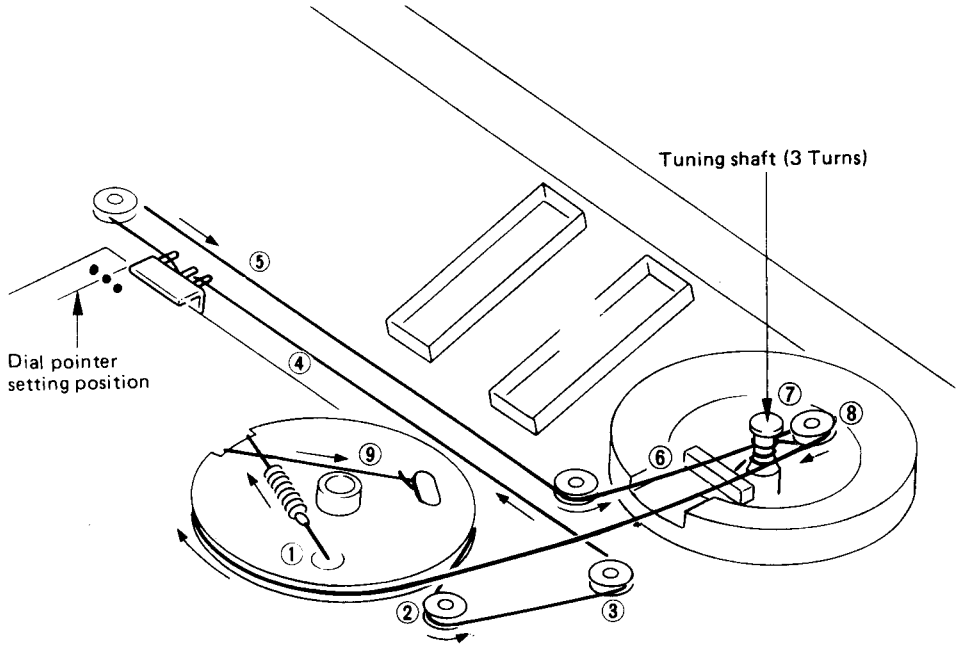

BLOCK DIAGRAM

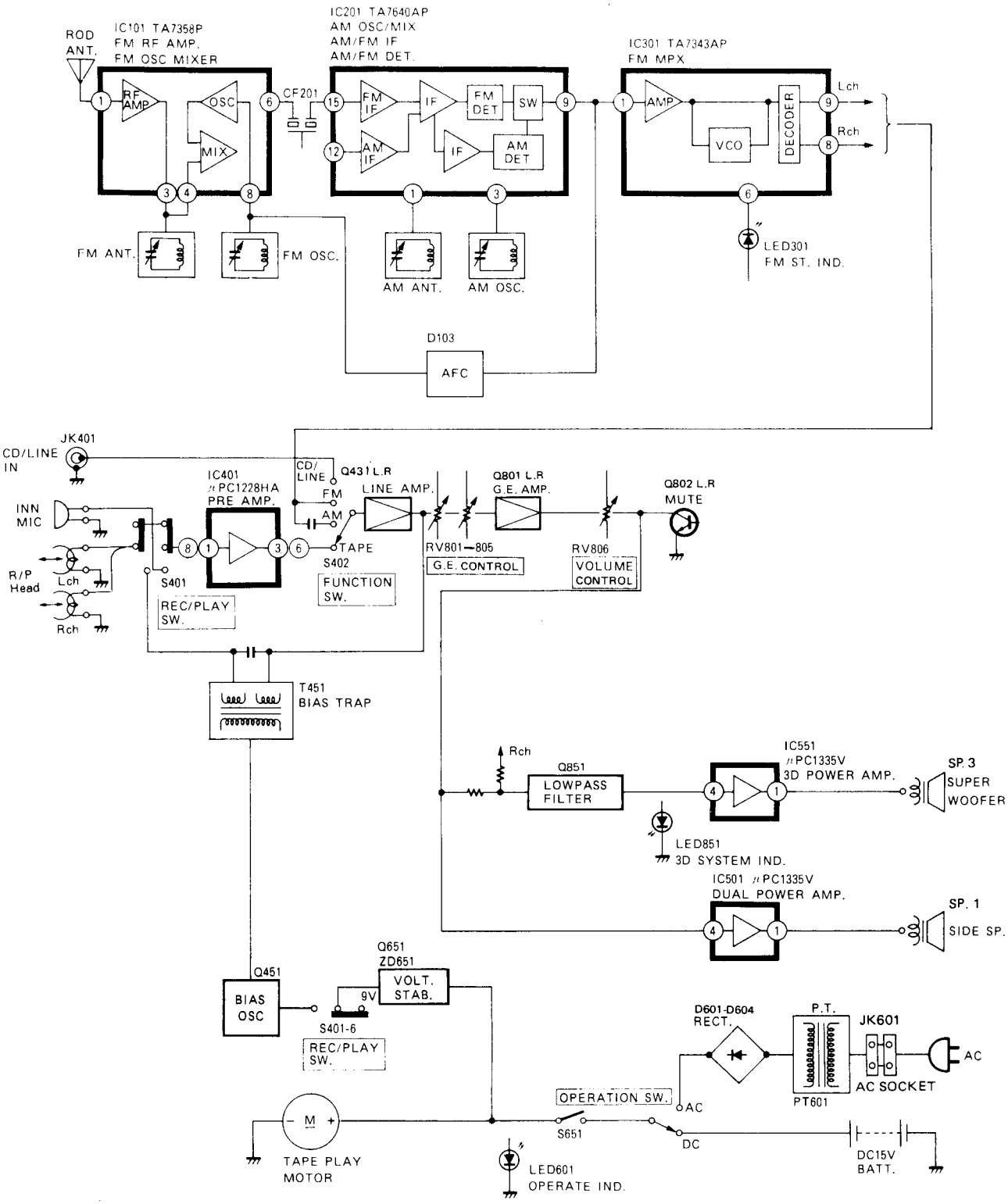

UIT DIAGRAM

※: Ax
※: Co

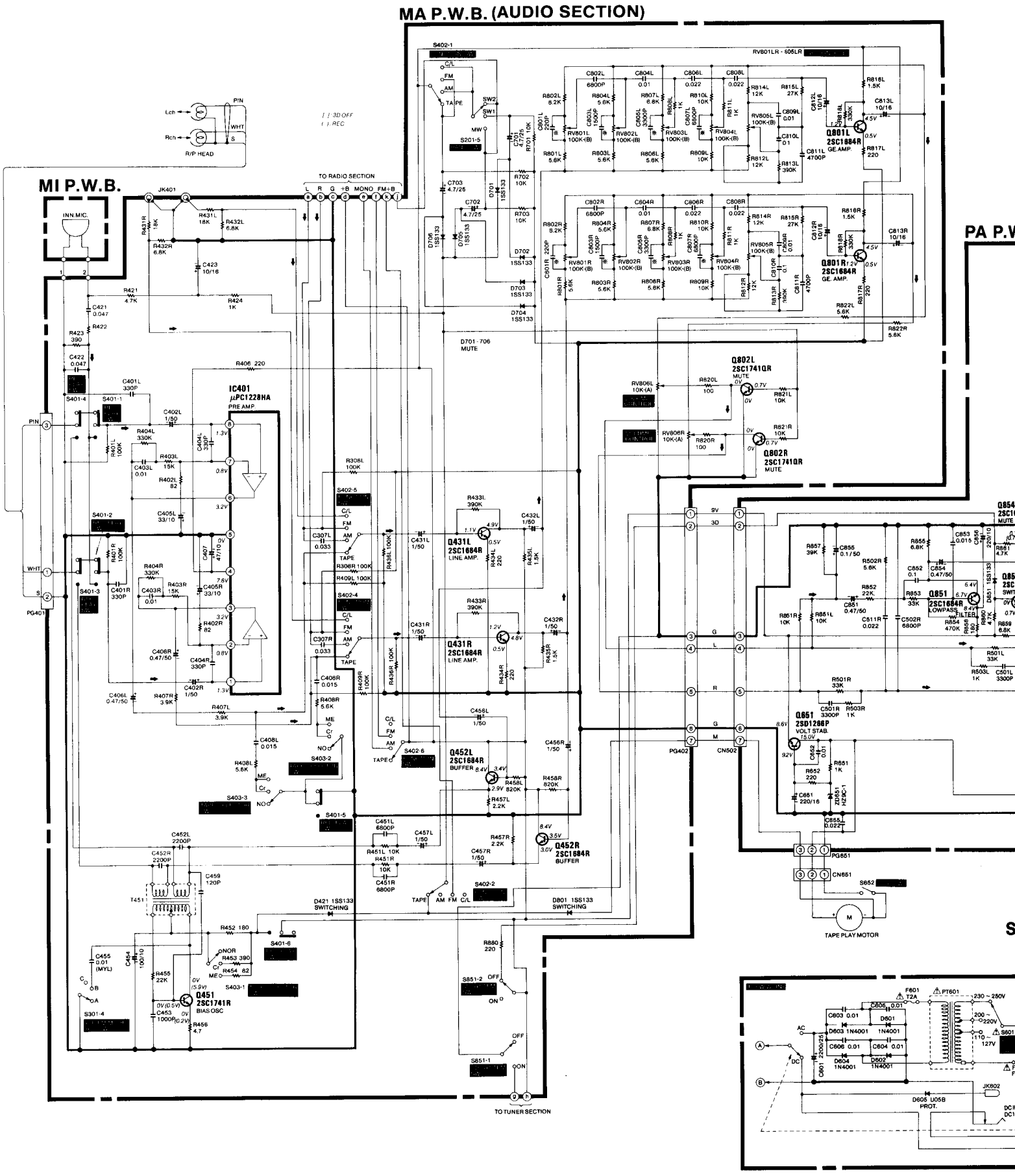

※: Axial lead cylindrical ceramic capacitor
※: Condensateur céramique cylindrique à conducteur axial

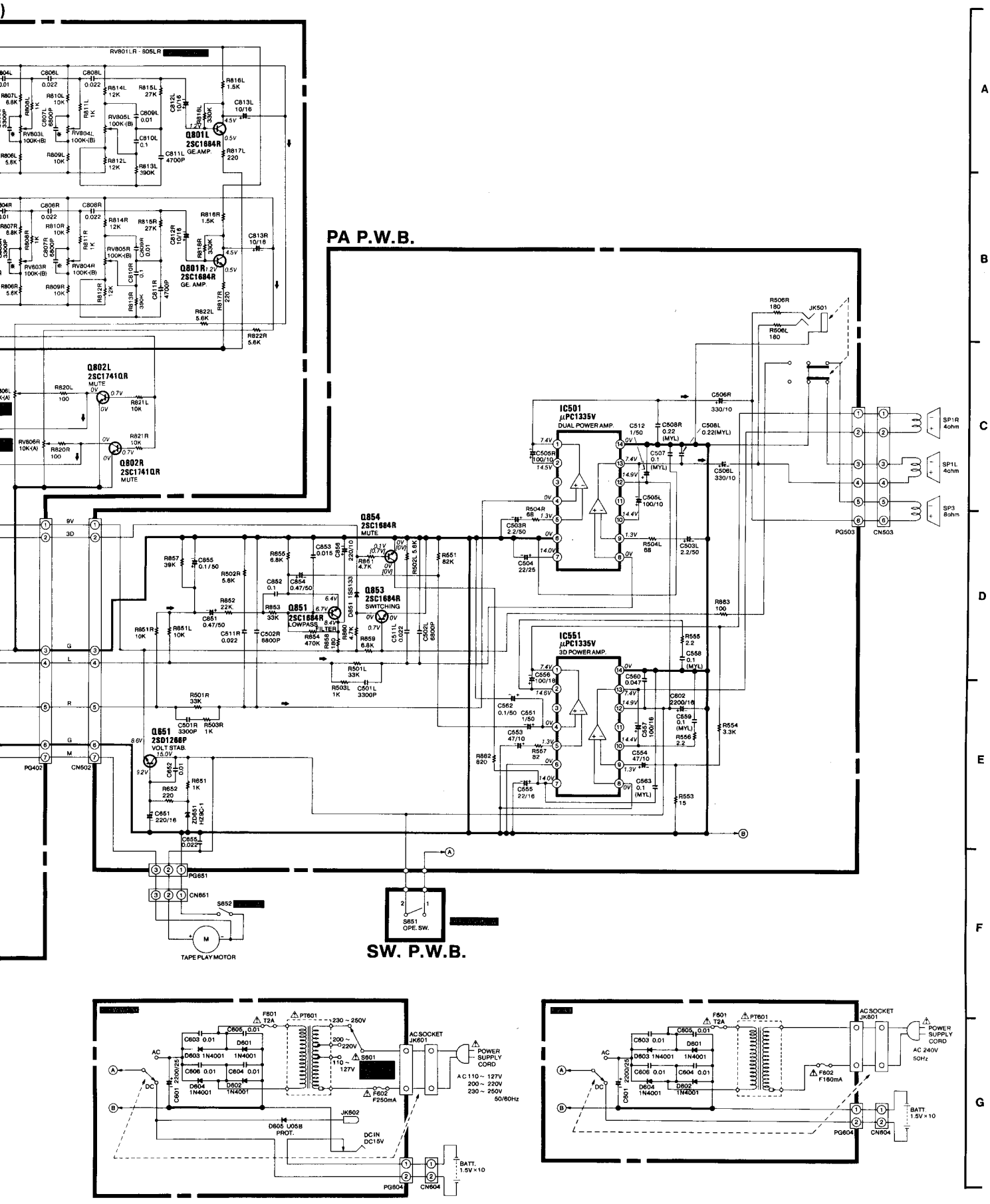

CIRCUIT DIAGRAM

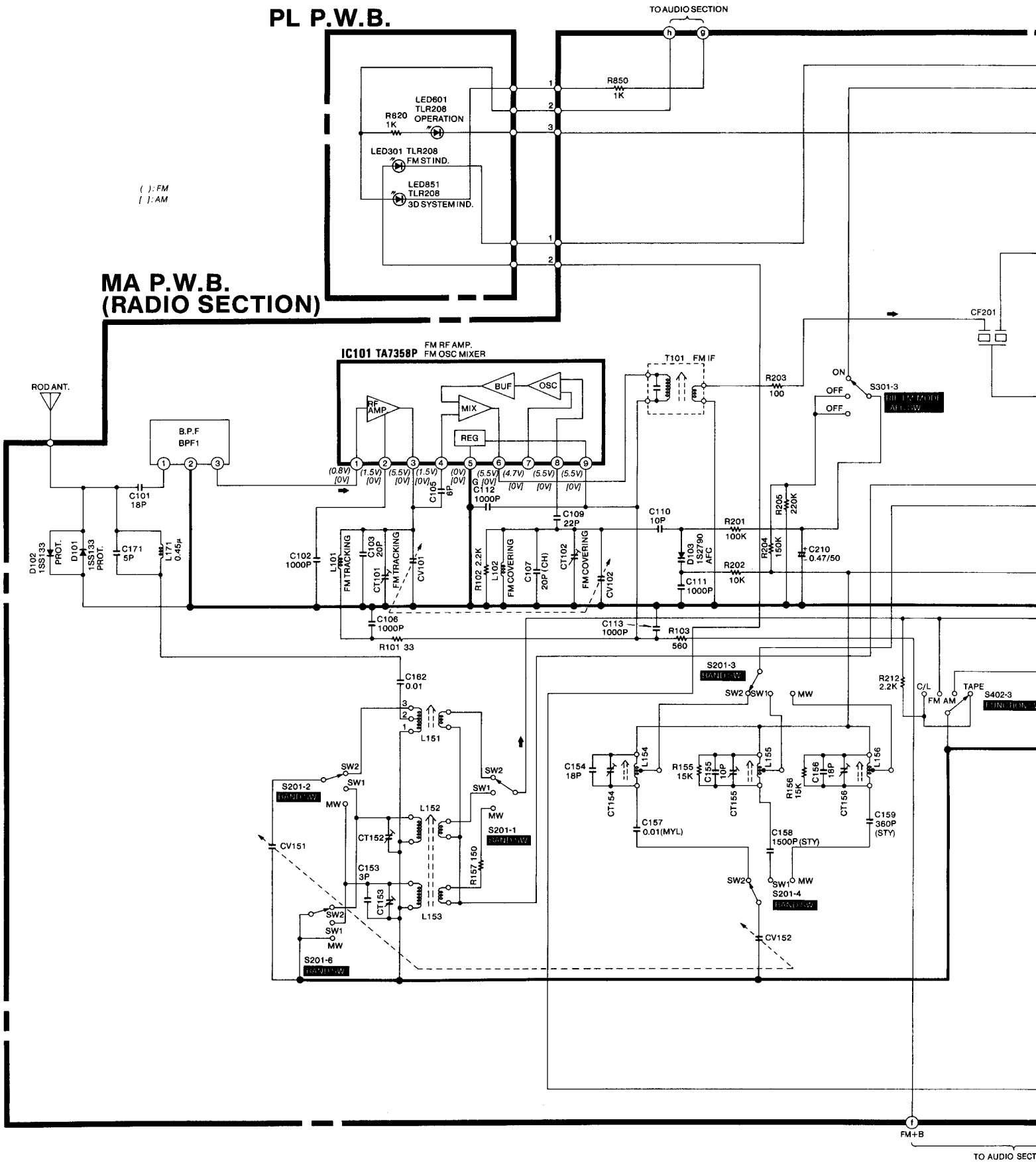

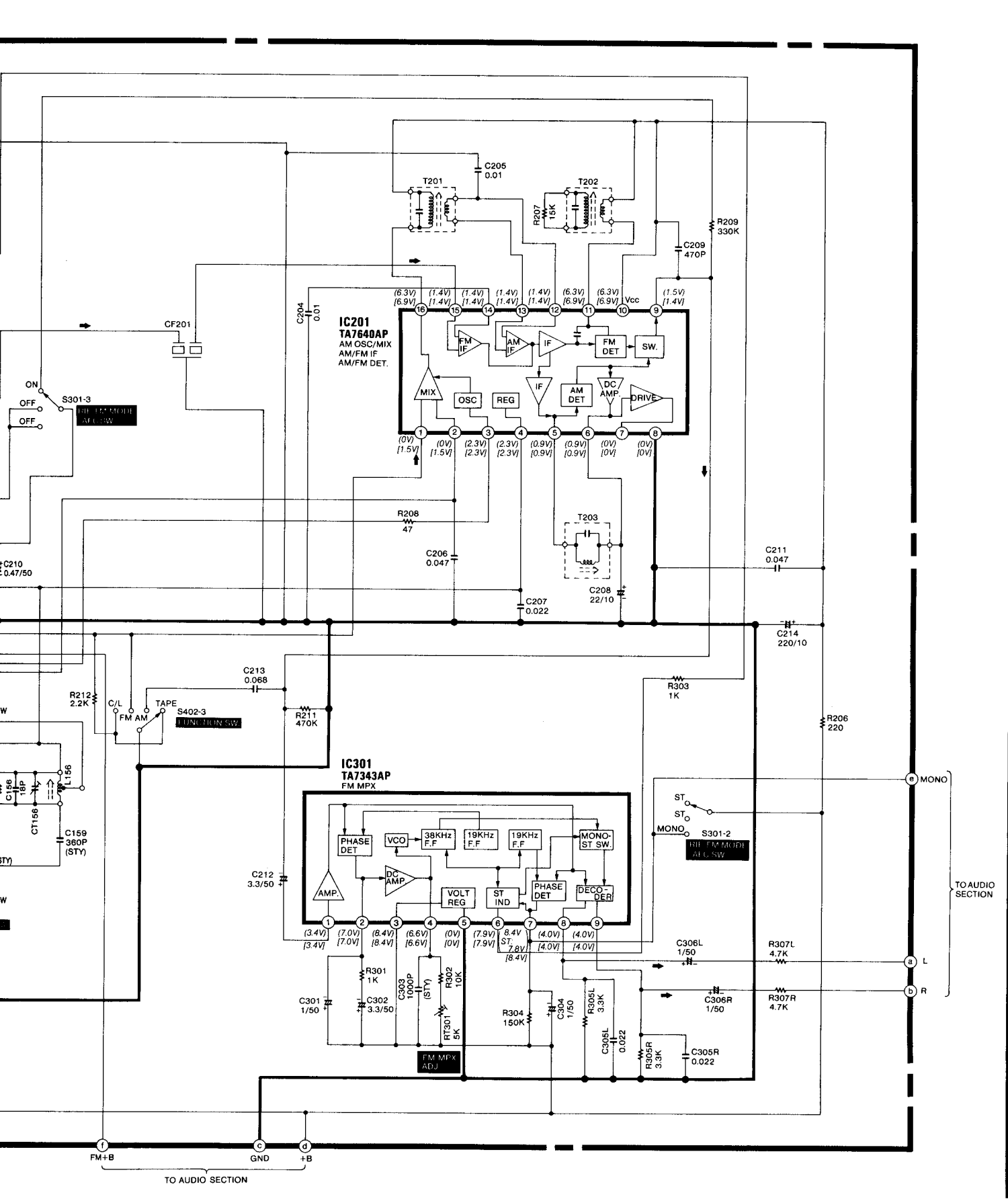
IC201
TA7640AP
AM OSC/MIX
AM/FM IF
AM/FM DET.
FM IF
AM IF
IF
FM DET
SW.
MIX
OSC
REG
IF
AM DET
DC AMP.
DRIVE
T201
T202
T203
C205 0.01
R207 15K
R209 330K
C209 470P
C204 0.01
CF201
ON
OFF
OFF
S301-3
R208 47
C206 0.047
C207 0.022
C208 22/10
C211 0.047
C214 220/10
C210 0.47/50
C213 0.068
R212 2.2K
C/L
FM AM
TAPE
S402-3
FUNCTION SW.
R211 470K
R303 1K
R206 220
IC301
TA7343AP
FM MPX
PHASE DET
VCO
38KHz F.F
19KHz F.F
19KHz F.F
MONO-ST SW.
AMP.
DC AMP.
VOLT REG
ST IND
PHASE DET
DECO-DER
C212 3.3/50
ST
MONO
S301-2
MONO
L156
C156 18P
CT156
C159 360P (STY)
R301 1K
C301 1/50
C302 3.3/50
C303 1000P (STY)
R302 10K
RT301 5K
R304 150K
C304 1/50
R305L 3.3K
C305L 0.022
R305R 3.3K
C305R 0.022
C306L 1/50
C306R 1/50
R307L 4.7K
R307R 4.7K
FM MPX ADJ.
MONO
L
R
TO AUDIO SECTION
FM+B
GND
+B
TO AUDIO SECTION

PRINTED WIRING BOARD

IC101		
	FM	AM
1	0.8V	0V
2	1.5V	0V
3	5.5V	0V
4	1.5V	0V
5	0V	0V
6	5.5V	0V
7	4.7V	0V
8	5.5V	0V
9	5.5V	0V

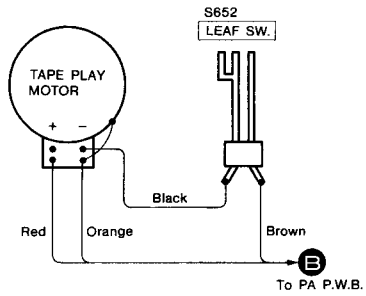

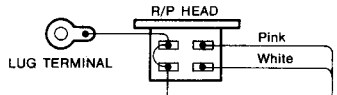

To PA P.W.B.
A

MA P.W.B.

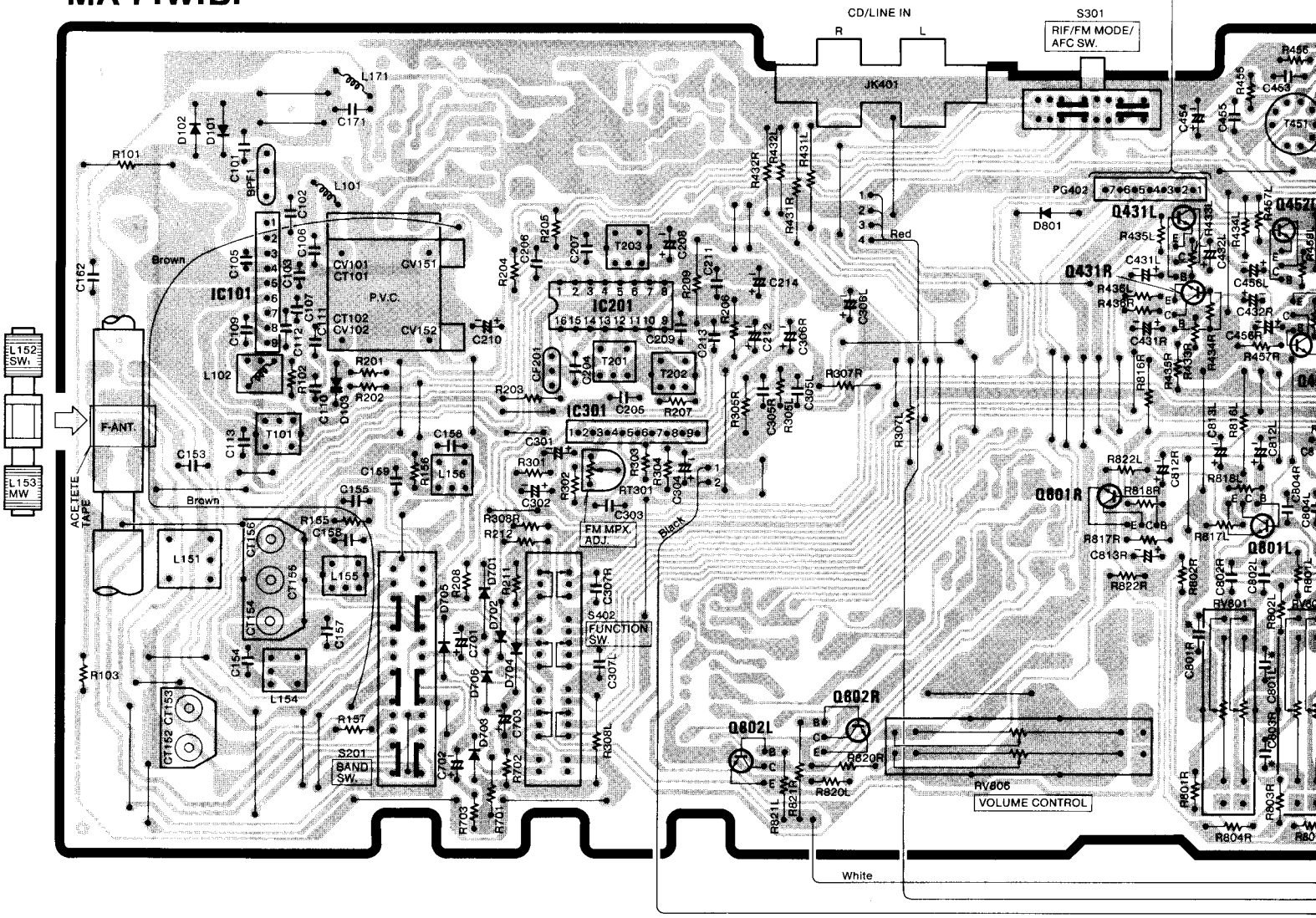

※: Axial lead cylindrical ceramic capacitor
※: Condensateur céramique cylindrique à conducteur axial

IC101	FM	AM
1	0.8V	0V
2	1.5V	0V
3	5.5V	0V
4	1.5V	0V
5	0V	0V
6	5.5V	0V
7	4.7V	0V
8	5.5V	0V
9	5.5V	0V

IC201	FM	AM
1	0V	1.5V
2	0V	1.5V
3	2.3V	2.3V
4	2.3V	2.3V
5	0.9V	0.9V
6	0.9V	0.9V
7	0V	0V
8	0V	0V
9	1.5V	1.4V
10	6.3V	6.9V
11	6.3V	6.9V
12	1.4V	1.4V
13	1.4V	1.4V
14	1.4V	1.4V
15	1.4V	1.4V
16	6.3V	6.9V

IC301	FM	AM
1	3.4V	3.4V
2	7.0V	7.0V
3	8.4V	8.4V
4	6.6V	6.6V
5	0V	0V
6	7.9V	7.9V
7	8.4V (ST:7.8V)	8.4V
8	4.0V	4.0V
9	4.0V	4.0V

IC401	
1	1.3V
2	0.8V
3	3.2V
4	7.8V
5	0V
6	3.2V
7	0.8V
8	1.3V

Q431L	
E	0.5V
C	4.9V
B	1.1V

Q431R	
E	0.5V
C	4.8V
B	1.2V

Q451		
E	0V	[0.2V]
C	0V	[5.9V]
B	0V	[0.5V]

[ ]:REC

Q452L	
E	2.9V
C	8.4V
B	3.4V

Q452R	
E	3.0V
C	8.4V
B	3.5V

Q801L	
E	0.5V
C	4.5V
B	1.2V

Q801R	
E	0.5V
C	4.5V
B	1.2V

Q802L	
E	0V
C	0V
B	0.7V

Q802R	
E	0V
C	0V
B	0.7V

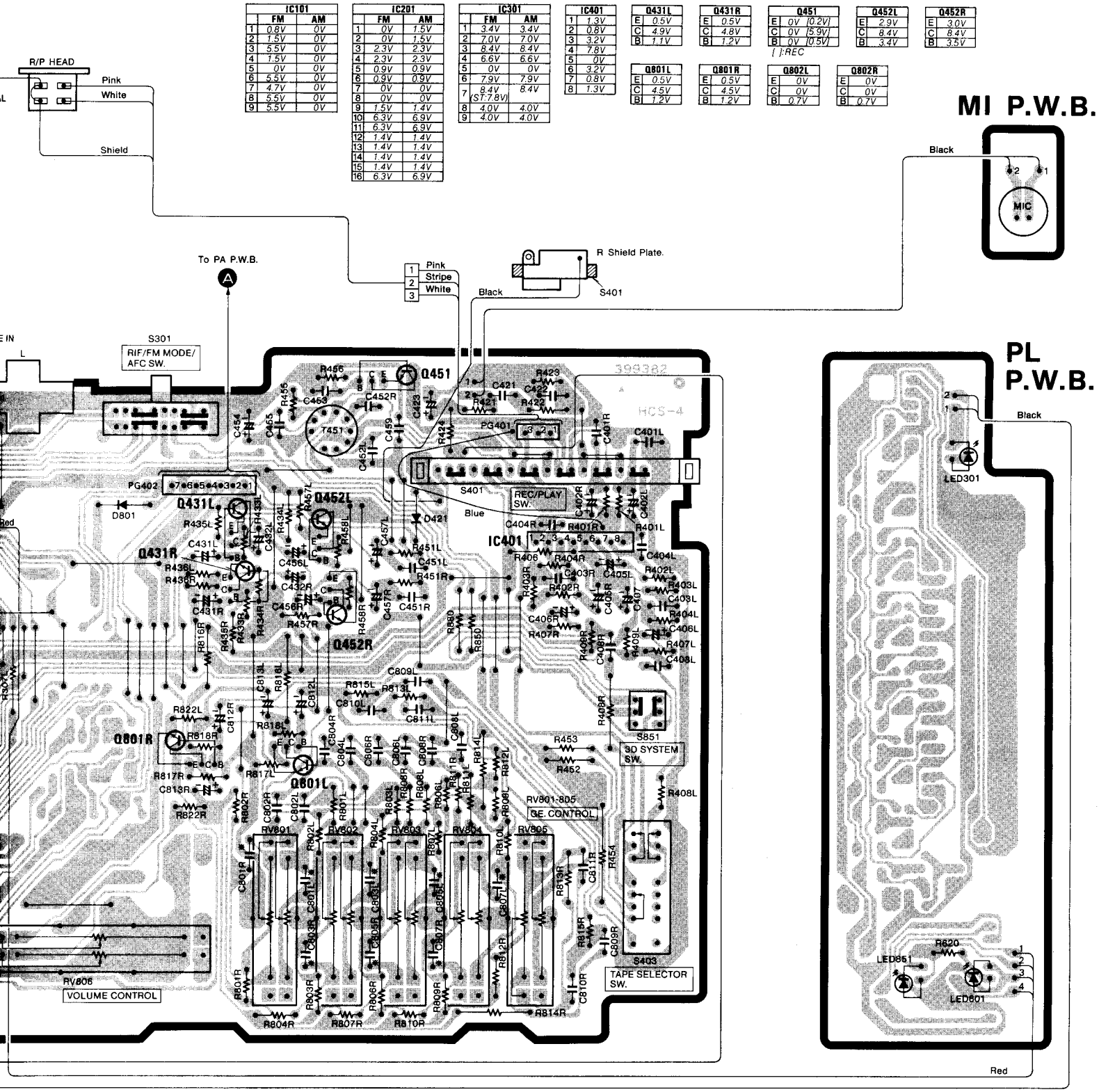

PRINTED WIRING BOARD

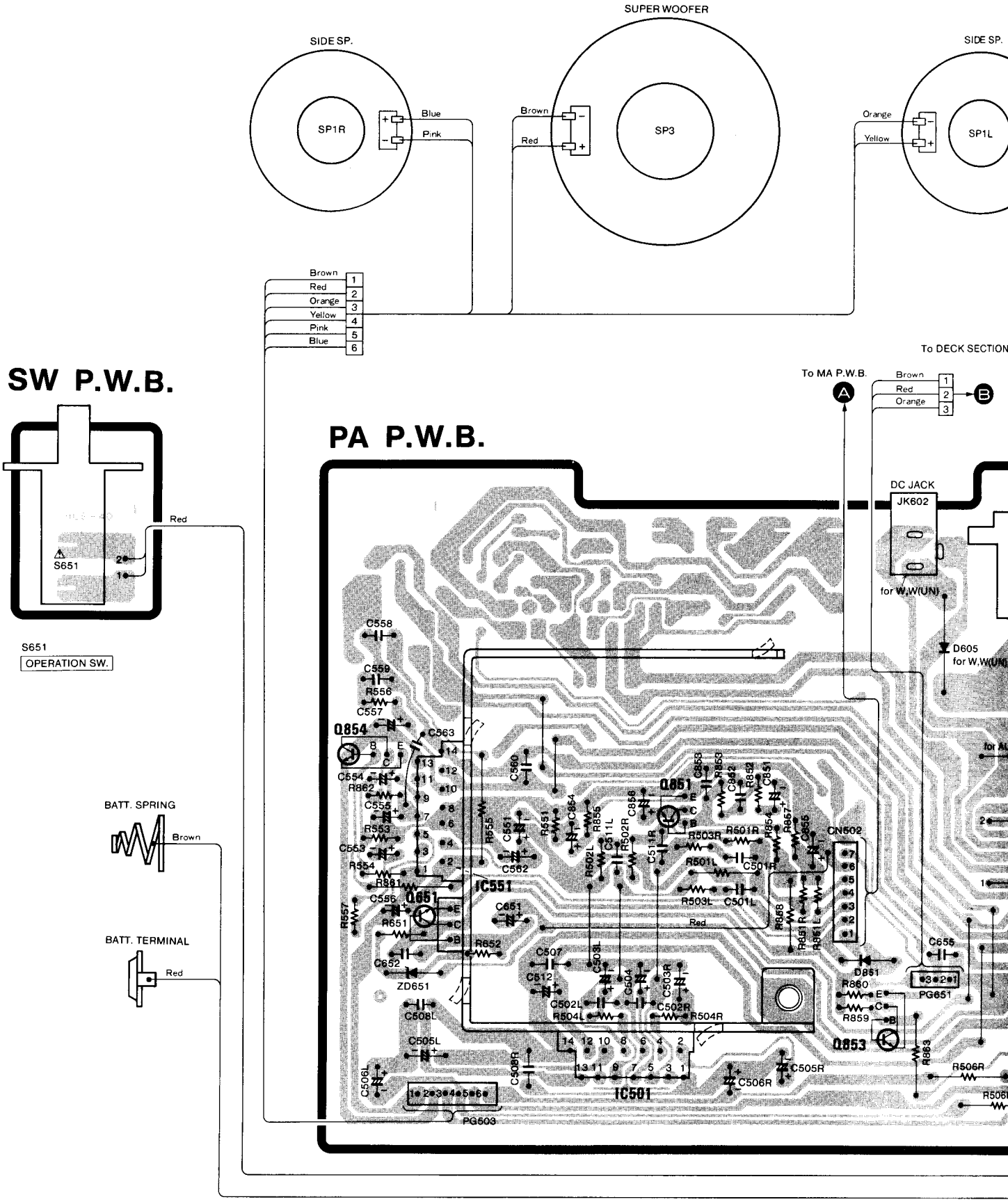

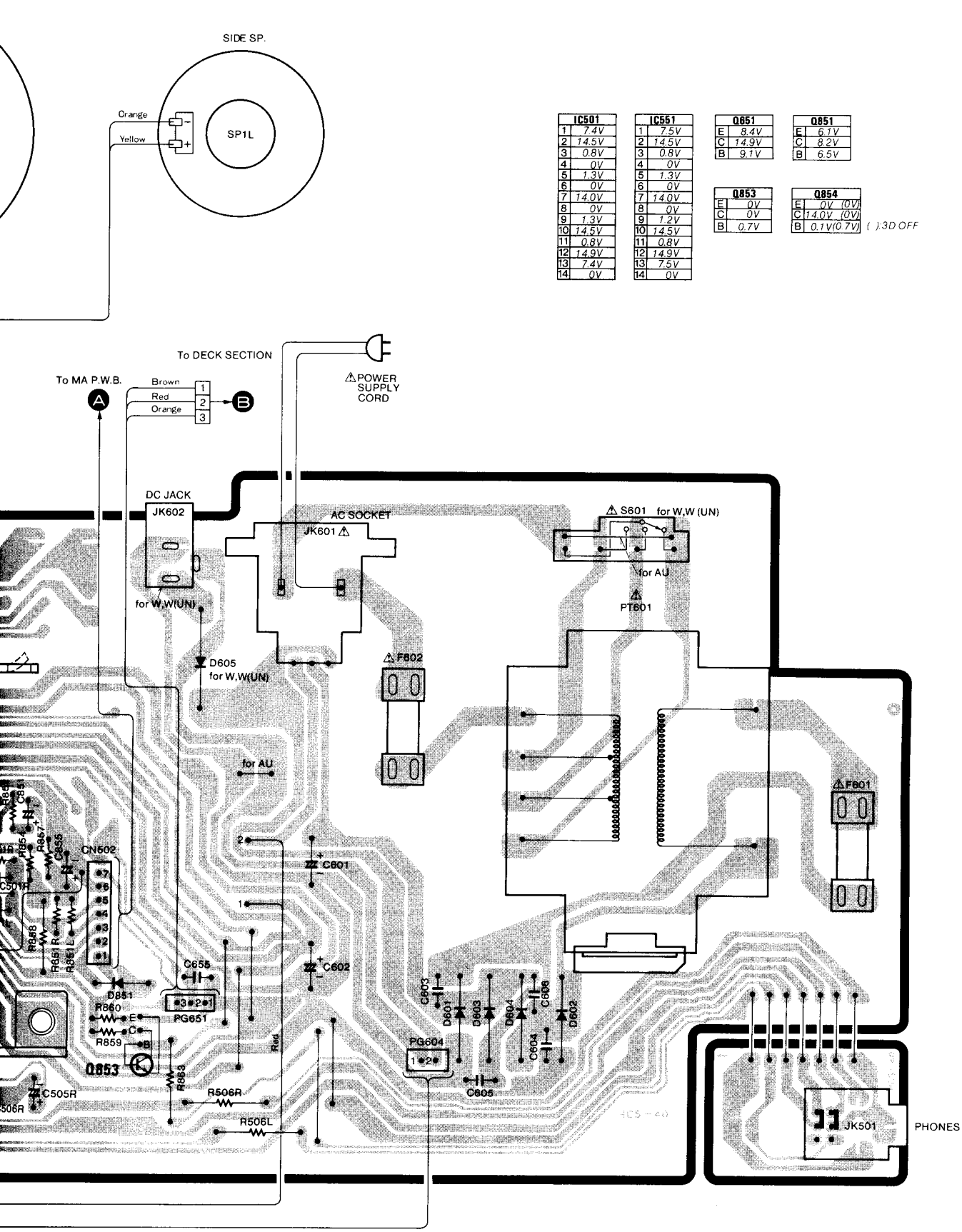

IC501	
1	7.4V
2	14.5V
3	0.8V
4	0V
5	1.3V
6	0V
7	14.0V
8	0V
9	1.3V
10	14.5V
11	0.8V
12	14.9V
13	7.4V
14	0V

IC551	
1	7.5V
2	14.5V
3	0.8V
4	0V
5	1.3V
6	0V
7	14.0V
8	0V
9	1.2V
10	14.5V
11	0.8V
12	14.9V
13	7.5V
14	0V

Q651	
E	8.4V
C	14.9V
B	9.1V

Q851	
E	6.1V
C	8.2V
B	6.5V

Q853	
E	0V
C	0V
B	0.7V

Q854	
E	0V (0V)
C	14.0V (0V)
B	0.1V(0.7V)

( ):3D OFF

EXPLODED VIEW (Nos. are reference Nos. of parts list)

● Cabinet chassis assembly

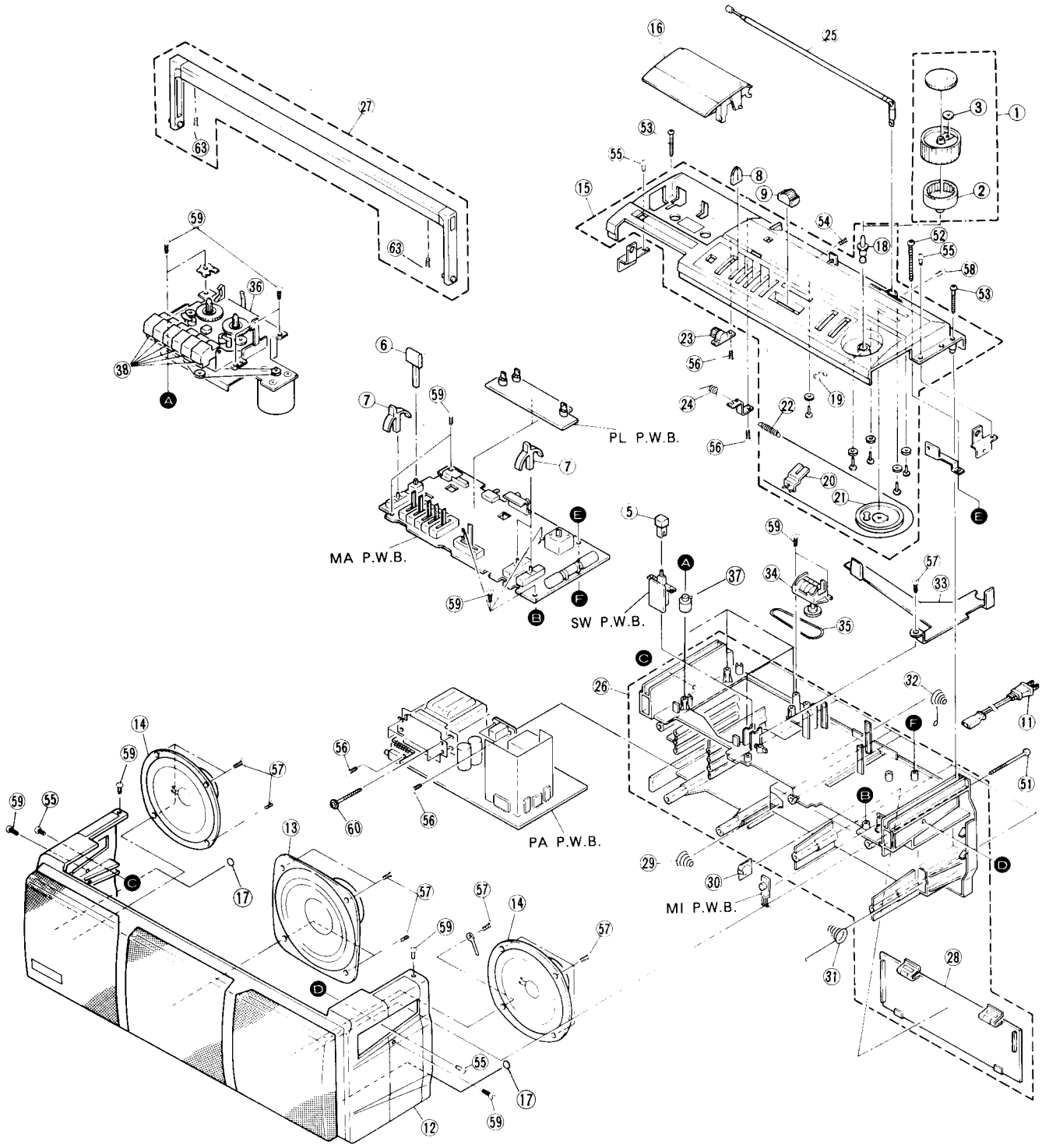

● Cassette chassis (TN-21H-982)

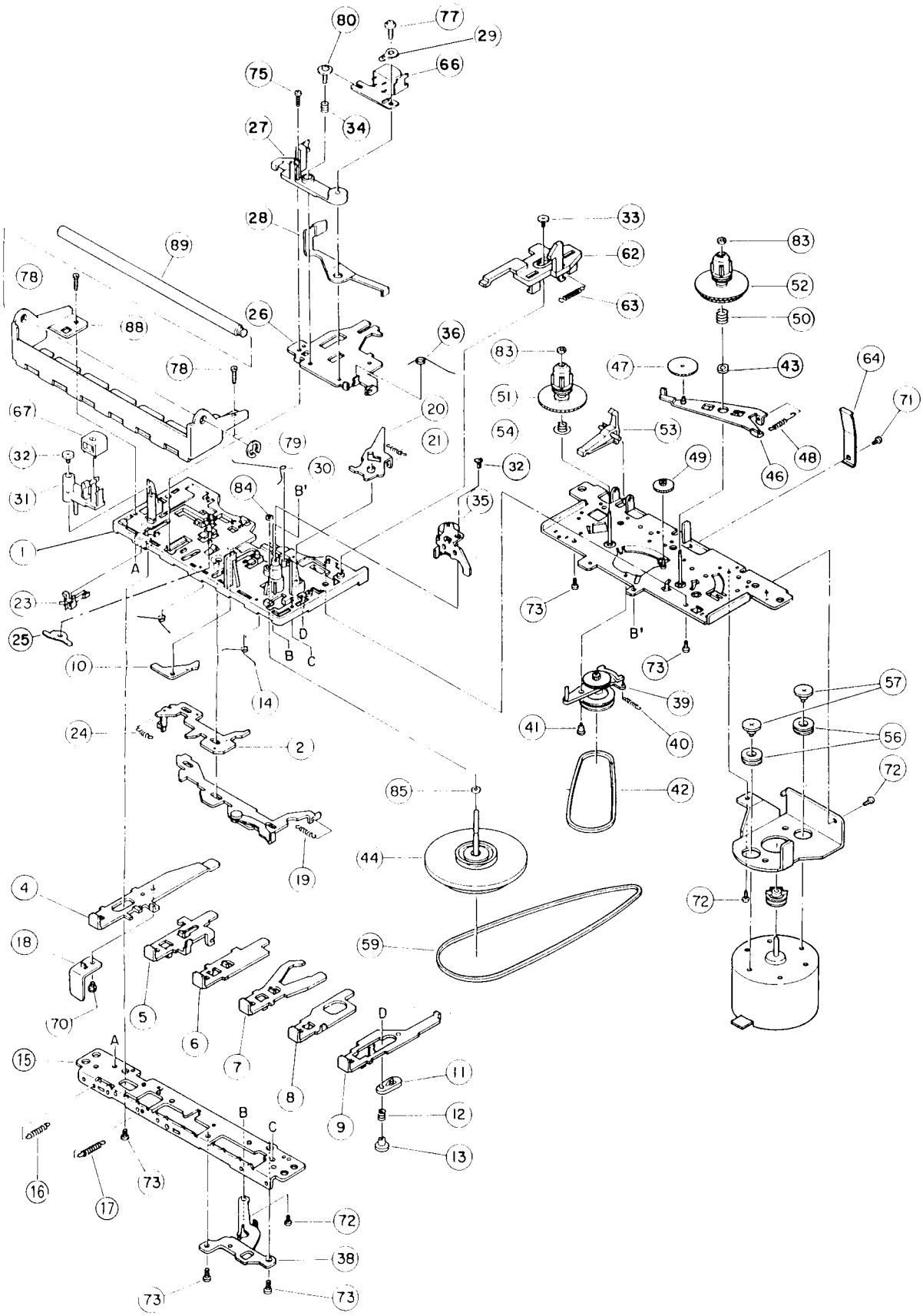

REPLACEMENT PARTS LIST

CD.....Ceramic discal
CC.....Cylindrical ceramic
EL.....Electrolytic
MF.....Mylar. film
ST.....Styrol
CF.....Carbon film
ME.....Metal
MO.....Metal, oxide
CO.....Composition
FR.....Fuse resistor

CAPACITORS

SYMBOL NO.	PART NO.	DESCRIPTION
C101	0208666	CD 18pF ±5% 50V
C102	0209731	CD 1000pF ±10% 50V
C103	0246447	CD 20pF ±5% 50V
C105	0248646	CD 6pF ±0.5pF 50V
C106	02441012	CD1000pF ±10% 50V
C107	0246447	CD 20pF ±5% 50V
C109	0248038	CD 22pF ±5% 50V
C110	0248020	CD 10pF ±0.5pF 50V
C111	0209731	CD 1000pF ±10% 50V
C112	02441012	CD 1000pF ±10% 50V
C113	0209731	CD 1000pF ±10% 50V
C153	0208633	CD 3pF ±0.5pF 50V
C154	0246446	CD 18pF ±5% 50V
C155	0208662	CD 12pF 0.5pF 50V
C156	0208666	CD 18pF ±5% 50V
C157	02750112	MF 0.01μF ±10% 50V
C158	1221396	ST 1500pF ±5% 50V
C159	1221393	ST 360pF ±5% 50V
C162	0244171	CD 0.01μF +80% -20 50V
C171	0208635	CD 5pF ±0.25pF 50V
C204	0244171	CD 0.01μF +80 -20% 50V
C205	0244171	CD 0.01μF +80% -20 50V
C206	0209175	CD 0.047μF +80 -20% 50V
C207	0244173	CD 0.022μF +80% -20 50V
C208	02523222	EL 22μF 10V
C209	0209723	CD 470pF ±10% 50V
C210	02528052	EL 0.47μF 50V
C211	0209175	CD 0.047μF +80% -20 50V
C212	02528132	EL 3.3μF 50V
C213	0240222	CD 0.068μF ±10% 25V
C214	02523322	EL 220μF 10V
C301	02528112	EL 1μF 50V
C302	02528132	EL 3.3μF 50V
C303	1221395	ST 1000pF ±5% 50V
C304	02528112	EL 1μF 50V
C305L,R	0240216	CD 0.022μF ±10% 25V
C306L,R	02528112	EL 1μF 50V
C307L,R	0240218	CD 0.033μF ±10% 25V
C401L,R	0209721	CD 330pF ±10% 50V
C402L,R	02528112	EL 1μF 50V
C403L,R	0240212	CD 0.01μF ±10% 25V
C404L,R	0209721	CD 330pF ±10% 50V
C405L,R	0252323	EL 33μF 10V
C406L,R	02528052	EL 0.47μF 50V
C407	02523252	EL 47μF 10V
C408L,R	0240214	CD 0.015μF ±10% 25V
C421	0240220	CD 0.047μF ±10% 25V
C422	0240220	CD 0.047μF ±10% 25V
C423	02525212	EL 10μF 16V
C431L,R	02528112	EL 1μF 50V
C432L,R	02528112	EL 1μF 50V
C451L,R	0240210	CD 6800pF ±10% 25V
C452L,R	0240204	CD 2200pF ±10% 25V
C453	0240200	CD 1000pF ±10% 25V
C454	02523312	EL 100μF 10V
C455	02750112	MF 0.01μF ±10% 50V
C456L,R	02528112	EL 1μF 50V
C457L,R	02528112	EL 1μF 50V
C459	0208686	EL 120pF ±5% 50V
C501L,R	0209734	CD 3300pF ±10% 50V
C502L,R	0244111	CD 6800pF ±10% 50V
C503L,R	02528122	EL 2.2μF 50V
C504	02526222	EL 22μF 25V
C505L,R	02423312	EL 100μF 10V
C506L,R	02525332	EL 330μF 10V
C507	02760112	MF 0.1μF ±10% 50V
C508L,R	02760132	MF 0.22μF ±10% 50V
C511L,R	0240216	CD 0.022μF ±10% 25V
C512	02528112	EL 1μF 50V
C551	02528112	EL 1μF 50V
C553	02523252	EL 47μF 10V
C554	02523252	EL 47μF 10V
C555	0252522	EL 22μF 16V
C556	0252531	EL 100μF 16V
C557	0252531	EL 100μF 16V
C558	02760112	MF 0.1μF ±10% 50V
C559	02760112	MF 0.1μF ±10% 50V
C560	0244175	CD 0.047μF +80% -20 50V
C562	02528012	EL 0.1μF 50V
C563	02760112	MF 0.1μF ±10% 50V
C601	02526422	EL 2200μF 25V
C602	02525422	EL 2200μF 16V
C603	0245405	CD 0.01μF ±20% 500V
C604	0245408	CD 0.01μF ±20% 500V
C605	0245408	CD 0.01μF ±20% 500V
C606	0245408	CD 0.01μF ±20% 500V
C651	02525322	EL 220μF 16V
C652	0240212	CD 0.01μF ±10% 25V
C655	0244173	CD 0.022μF +80% -20 50V
C701	0252615	EL 4.7μF 25V
C702	0252615	EL 4.7μF 25V
C703	0252615	EL 4.7μF 25V
C801L,R	0240037	CC 220pF ±10% 50V
C802L,R	0240210	CD 6800pF ±10% 25V
C803L,R	0240051	CC 1500pF ±20% 16V
C804L,R	0240212	CD 0.01μF ±10% 25V
C805L,R	0240055	CC 3300pF ±20% 16V
C806L,R	0240216	CD 0.022μF ±10% 25V
C807L,R	0240059	CC 6800pF ±30% 16V
C808L,R	0240216	CD 0.022μF ±10% 25V
C809L,R	0240212	CD 0.01μF ±10% 25V
C810L,R	0240224	CD 0.1μF ±10% 25V
C811L,R	0240208	CD 4700pF ±10% 25V
C812L,R	02525212	EL 10μF 16V
C813L,R	02525212	EL 10μF 16V
C851	02528052	EL 0.47μF 50V
C852	0240224	CD 0.1μF ±10% 25V
C853	0240214	CD 0.015μF ±10% 25V
C854	02528052	EL 0.47μF 50V
C855	02528012	EL 0.1μF 50V
C856	02523322	EL 220μF 10V

RESISTORS

SYMBOL NO.	PART NO.	DESCRIPTION
R101	0113579	CF 33Ω ±5% SRD1/6P
R102	0113623	CF 2.2kΩ ±5% SRD1/6P
R103	0113609	CF 560Ω ±5% SRD1/6P
R155	0113643	CF 15kΩ ±5% SRD1/6P
R156	0113643	CF 15kΩ ±5% SRD1/6P
R157	0113595	CF 150Ω ±5% SRD1/6P
R201	0113663	CF 100kΩ ±5% SRD1/6P
R202	0113639	CF 10kΩ ±5% SRD1/6P
R203	0113591	CF 100Ω ±5% SRD1/6P
R204	0113667	CF 150kΩ ±5% SRD1/6P
R205	0113671	CF 220kΩ ±5% SRD1/6P
R206	0113599	CF 220Ω ±5% SRD1/6P
R207	0113643	CF 15kΩ ±5% SRD1/6P
R208	0113583	CF 47Ω ±5% SRD1/6P
R209	0113675	CF 330kΩ ±5% SRD1/6P
R211	0113679	CF 470kΩ ±5% SRD1/6P
R212	0113623	CF 2.2kΩ ±5% SRD1/6P
R301	0113615	CF 1kΩ ±5% SRD1/6P
R302	0113639	CF 10kΩ ±5% SRD1/6P
R303	0113615	CF 1kΩ ±5% SRD1/6P
R304	0113667	CF 150kΩ ±5% SRD1/6P
R305L,R	0113627	CF 3.3kΩ ±5% SRD1/6P
R307L,R	0113631	CF 4.7kΩ ±5% SRD1/6P
R308L,R	0113663	CF 100kΩ ±5% SRD1/6P
R401L,R	0113663	CF 100kΩ ±5% SRD1/6P
R402L,R	0113589	CF 82Ω ±5F SRD1/6P
R403L,R	0113643	CF 15kΩ ±5% SRD1/6P
R404L,R	0113675	CF 330kΩ ±5% SRD1/6P
R406	0113599	CF 220Ω ±5% SRD1/6P
R407L,R	0113629	CF 3.9kΩ ±5% SRD1/6P
R408L,R	0113633	CF 5.6kΩ ±5% SRD1/6P
R409L,R	0113663	CF 100kΩ ±5% SRD1/6P
R421	0113631	CF 4.7kΩ ±5% SRD1/6P
R422	0113615	CF 1kΩ ±5% SRD1/6P
R423	0113605	CF 390Ω ±5% SRD1/6P
R424	0113615	CF 1kΩ ±5% SRD1/6P
R431L,R	0113645	CF 18kΩ ±5% SRD1/6P
R432L,R	0113635	CF 6.8kΩ ±5% SRD1/6P
R433L,R	0113677	CF 390kΩ ±5% SRD1/6P
R434L,R	0113599	CF 220Ω ±5% SRD1/6P
R435L,R	0113619	CF 1.5kΩ ±5% SRD1/6P
R436L,R	0113663	CF 100kΩ ±5% SRD1/6P
R451L,R	0113639	CF 10kΩ ±5% SRD1/6P
R452	0129567	CF 180Ω ±5% SRD1/4P
R453	0113605	CF 390Ω ±5% SRD1/6P
R454	1119412	MO 82Ω ±10% RS1B
R455	0113647	CF 22kΩ ±5% SRD1/6P
R456	0113559	CF 4.7Ω ±5% SRD1/6P
R457L,R	0113623	CF 2.2kΩ ±5% SRD1/6P
R458L,R	0113685	CF 820kΩ ±5% SRD1/6P
R501L,R	0113651	CF 33kΩ ±5% SRD1/6P
R502L,R	0113633	CF 5.6kΩ ±5% SRD1/6P
R503L,R	0113615	CF 1kΩ ±5% SRD1/6P
R504L,R	0113587	CF 68Ω ±5% SRD1/6P
R506L,R	0113290	CF 180Ω ±5% SRD1/2P
R551	0113661	CF 82kΩ ±5% SRD1/6P
R553	0113571	CF 15Ω ±5% SRD1/6P
R554	0113627	CF 3.3kΩ ±5% SRD1/6P
R555	0113551	CF 2.2Ω ±5% SRD1/6P
R556	0113551	CF 2.2Ω ±5% SRD1/6P
R557	0113589	CF 82Ω ±5% SRD1/6P
R620	0113615	CF 1kΩ ±5% SRD1/6P
R651	0129601	CF 1kΩ ±5% SRD1/4P
R652	0113599	CF 220Ω ±5% SRD1/6P
R701	0113639	CF 10kΩ ±5% SRD1/6P
R702	0113639	CF 10kΩ ±5% SRD1/6P

SYMBOL NO.	PART NO.	DESCRIPTION
R703	0113639	CF 10kΩ ±5% SRD1/6P
R801L,R	0113633	CF 5.6kΩ ±5% RN1/4B
R802L,R	0113637	CF 8.2kΩ ±5% SRD1/6P
R803L,R	0113633	CF 5.6kΩ ±5% SRD1/6P
R804L,R	0113633	CF 5.6kΩ ±5% SRD1/6P
R806L,R	0113633	CF 5.6kΩ ±5% SRD1/6P
R807L,R	0113635	CF 6.8kΩ ±5% SRD1/6P
R808L,R	0113615	CF 1kΩ ±5% SRD1/6P
R809L,R	0113639	CF 10kΩ ±5% SRD1/6P
R810L,R	0113639	CF 10kΩ ±5% SRD1/6P
R811L,R	0113615	CF 1kΩ ±5% SRD1/6P
R812L,R	0113641	CF 12kΩ ±5% SRD1/6P
R813L,R	0113677	CF 390kΩ ±5% SRD1/6P
R814L,R	0113641	CF 12kΩ ±5% SRD1/6P
R815L,R	0113649	CF 27kΩ ±5% SRD1/6P
R816L,R	0113619	CF 1.5kΩ ±5% SRD1/6P
R817L,R	0113599	CF 220Ω ±5% SRD1/6P
R818L,R	0113675	CF 330kΩ ±5% SRD1/6P
R820L,R	0113591	CF 100Ω ±5% SRD1/6P
R821L,R	0113639	CF 10kΩ ±5% SRD1/6P
R822L,R	0113633	CF 5.6kΩ ±5% SRD1/6P
R850	0113615	CF 1kΩ ±5% SRD1/6P
R851L,R	0113639	CF 10kΩ ±5% SRD1/6P
R852	0113647	CF 22kΩ ±5% SRD1/6P
R853	0113651	CF 33kΩ ±5% SRD1/6P
R854	0113679	CF 470kΩ ±5% SRD1/6P
R855	0113635	CF 6.8kΩ ±5% SRD1/6P
R857	0113653	CF 39kΩ ±5% SRD1/6P
R858	0129567	CF 180Ω ±5% SRD1/4P
R859	0113635	CF 6.8kΩ ±5% SRD1/6P
R860	0113631	CF 4.7kΩ ±5% SRD1/6P
R861	0113631	CF 4.7kΩ ±5% SRD1/6P
R862	0113613	CF 820Ω ±5% SRD1/6P
R863	0113591	CF 100Ω ±5% SRD1/6P
R880	0113599	CF 220Ω ±5% SRD1/6P

ICs & TRANSISTORS

SYMBOL NO.	PART NO.	DESCRIPTION
IC101	2398201	TA7358P
IC201	2389511	TA7640AP
IC301	2301041	TA7343AP
IC401	2387022	μPC1228HA
IC501	2300872	μPC1335V
IC551	2300872	μPC1335V
Q431L,R	2319101	2SC1684 Ⓡ
Q451	2329313	2SC1741 Ⓡ
Q452L,R	2319101	2SC1684 Ⓡ
Q651	2317803	2SD1266 Ⓟ
Q801L,R	2319101	2SC1684 Ⓡ
Q802L,R	2329316	2SC1741 (QR)
Q851	2319101	2SC1684 Ⓡ
Q853	2319101	2SC1684 Ⓡ
Q854	2319101	2SC1684 Ⓡ

DIODES

SYMBOL NO.	PART NO.	DESCRIPTION
D101	2397421	1SS133
D102	2397421	1SS133
D103	2338031	1S2790
D421	2397421	1SS133
D601	2398062	1N4001
D602	2398062	1N4001
D603	2398062	1N4001
D604	2398062	1N4001
D605	23391412	U05B [for W(UN), W]
D701	2397421	1SS133
D702	2397421	1SS133
D703	2397421	1SS133
D704	2397421	1SS133
D705	2397421	1SS133
D706	2397421	1SS133
D801	2397421	1SS133
D851	2397421	1SS133
ZD651	23375272	HZ9C1
LED301	2397311	TLR208
LED601	2397311	TLR208
LED851	2397311	TLR208

VARIABLE RESISTORS

SYMBOL NO.	PART NO.	DESCRIPTION
RT301	0189331	5kΩ FM MPX
RV801	0189161	100kΩ–(B) GE.
RV802	0189161	100kΩ–(B) GE.
RV803	0189161	100kΩ–(B) GE.
RV804	0189161	100kΩ–(B) GE.
RV805	0189161	100kΩ–(B) GE.
RV806	0189322	10kΩ–(A) VOLUME

COILS & TRANSFORMERS

SYMBOL NO.	PART NO.	DESCRIPTION
L101	2137683	FM RF coil
L102	2135274	FM OSC coil
L151	2137821	SW antenna coil
L152	2757982	Ferrite antenna
L153	2757982	Ferrite antenna
L154	2137672	SW OSC coil
L155	2137633	SW OSC coil
L156	2137631	MW OSC coil
L171	2137684	Choke coil
T101	2154962	FM IF transformer
T201	2154952	AM IF transformer
T202	2154964	FM IF transformer
T203	2154951	AM IF transformer
T451	2137651	REC OSC transformer

MISCELLANEOUS

SYMBOL NO.	PART NO.	DESCRIPTION
JK401	2678201	2P Pin jack
JK501	2678761	Stereo jack
JK601	26592722	2P socket
JK602	2677931	DC jack [for W(UN), W]
BPF1	2137191	FM band pass filter
CV101	0282441	Capacitor variable
CV102		
CV151		
CV152		
CT101		
CT102		
CT152	0283557	Capacitor semi variable
CT153	0283557	Capacitor semi variable
CT154	0283130	Capacitor semi variable
CT155	0283130	Capacitor semi variable
CT156	0283130	Capacitor semi variable
CF201	2135321	Ceramic filter
⚠F601	2728076	Fuse T2A
⚠F602	2727726	Fuse F250mA [for W(UN), W]
⚠F602	2728075	Fuse F160mA [for AU]
S201	2629366	Lever switch BAND
S301	2628691	Slide switch FM MODE/ AFC/RIF
S401	2628522	Slide switch REC/PLAY
S402	2628531	Lever switch FUNCTION
S403	2629365	Lever switch TAPE SELECTOR
⚠S601	2618472	Switch VOLT SELECTOR [for W(UN), W]
⚠S651	2639869	Push switch OPERATION
S851	2600321	Push switch 3D SYSTEM
⚠PT601	2249452	Power Transformer [for AU]
⚠PT601	2249453	Power transformer [for W, W(UN)]
	2737441	MIC
	2527164	A PWB assy
	2528051	B PWB assy
	8691408	BT screw (3 x 8)Z

Cabinet

SYMBOL NO.	PART NO.	DESCRIPTION
1	4044311	Tuning knob assy
2	3806231	Gear
3	3348612	Gear
5	3805771	Power button
6	3805791	3D button
7	3805781	Switch knob
8	3805601	Slide knob
9	3805851	Volume knob
⚠ 11	2717464	Power supply cord [for W, W (UN)]
⚠	2704542	Power supply cord [for AU]
12	40449512	Front case
13	2403992	16 Speaker
14	2403981	12 Speaker (SIDE SP.)
15	4005512	Top panel assy
16	40443012	Cassette lid assy
17	4469352	Tweeter mirror
18	4597131	Tuning shaft
19	4418013	E ring
20	3806201	Pointer

SYMBOL NO.	PART NO.	DESCRIPTION
21	3348702	Pulley
22	3340321	Spring
23	3950382	Damper
24	3391962	Lid spring
25	2758141	Rod antenna
26	4005533	Rear case assy [for W]
	4005534	Rear case assy [for W(UN)]
	4005535	Rear case assy [for AU]
27	4005541	Handle sub-assy
28	3805801	Battery lid
29	3369849	Spring A
30	4436666	Terminal
31	3369941	Spring
32	3367062	Spring
33	4476622	REC lever
34	27803112	Counter
35	46919112	Counter belt
36	33269812	Mechanism assy
37	3807401	4.5 Bushing
38	3805581	Cassette button

SYMBOL NO.	PART NO.	DESCRIPTION
51	4577818	BT screw (3x50)
52	4577817	BT screw (3x30)
53	4577816	BT screw (3x20)
54	8699414	BT bind head screw (3x14)
55	4567432	DT screw (3 x 8)
56	8691410	BT bind head screw (3x10)
57	4578973	BT flange screw (3x8)
58	8744410	Bind head screw (3x10)
59	8699412	BT screw (3 x 12) B
60	4578976	BT flange screw (3x20)
63	4578032	Screw (3 x 10)

Cassette chassis(TN-21H-982)

SYMBOL NO.	PART NO.	DESCRIPTION
1	48189912	Main base assy
2	48189922	Switch plate
4	4823651	REC button lever
5	4823661	PLAY button lever
6	4823671	RWD button lever
7	4823681	FF button lever
8	4823691	STOP button lever
9	4823701	PAUSE button lever
10	4818990	RWD lever
11	48191312	PAUSE lever
12	48191322	PAUSE lever spring
13	4819133	PAUSE stopper
14	48191002	Button lever spring
15	48202152	Sub chassis
16	48190072	Button lever spring
17	48202172	Play button lever spring
18	4833452	RECORD plate
19	48190082	Actuator spring
20	48190092	AUTO lever
21	48190002	AUTO lever spring
23	4848951	Leaf switch
24	48202182	Switch actuator spring
25	48190062	PR stopper
26	48202192	Head panel
27	48190142	Head base
28	4832412	Sensing plate assy
29	48190622	Lug plate 3B
30	48202212	Head panel spring
31	48190182	MG arm

SYMBOL NO.	PART NO.	DESCRIPTION
32	4832522	Screw
33	48190452	Screw
34	4819017	Spring
35	4839372	Pinch roller arm assy
36	4848082	Pinch roller spring
38	4831610	Metal guide
39	4850091	RF pulley arm assy (REWIND/FORWARD)
40	48202252	RF pulley arm spring
41	28202262	RF arm coller screw
42	48202272	Belt
43	4848081	Collar
44	4850092	Flywheel
46	4850093	T gear plate assy
47	4839378	Take-up roller Gear
48	48190202	TG plate spring
49	4832417	FF gear
50	4839382	Back tension spring
51	4842431	Supply reel assy
52	4839381	Take up reel assy
53	4832421	Record safety lever
54	4839379	Back tension spring
56	48190392	Motor rubber
57	48195332	Motor collar screw
59	48202522	Main belt
62	48190432	Eject slide lever
63	48190442	Eject slide lever spring
64	48202422	Pack spring
66	4848041	Record playback head
67	4848051	Erase head

SYMBOL NO.	PART NO.	DESCRIPTION
70	48191862	Screw (2 x 3)
71	48196072	Bind tapping screw(2 x 5)
72	48190682	Tapping screw (2 x 4)
73	48190632	Tapping screw (2 x 3)
75	48196112	Screw (2 x 6)
77	48190602	Screw (2 x 7)
78	48190722	Screw (2 x 7)
79	4833471	E type ring (3.2)
80	48196002	Azimuth screw
83	4848953	Washer (1.2)
84	48190782	Washer (1.55)
85	4832432	Washer (2.05)
88	4474661	Frame
89	4596071	Button lever shaft

HITACHI

HITACHI SALES EUROPA GmbH
Rungedamm 2, 2050 Hamburg 80, West Germany
Tel. 040-734 11-0

HITACHI SALES (U.K.) Ltd.
Hitachi House, Station Road, Hayes, Middlesex UB3 4DR, England
Tel. 01-848-8787

HITACHI SALES SCANDINAVIA AB
Rissneleden 8, Box 7138, 172-07 Sundbyberg, Sweden
Tel. 08-98 52 80

HITACHI SALES NORWAY A/S
P.O. Box 503, Oerebekk, 1620, Gressvik, Norway
Tel. 032-28255

SUOMEN HITACHI OY
Takojankatsu 5, 15800 Lahti 80, Finland
Tel. (918) 44 241

HITACHI SALES A/S
Kuldyssen 13, DK-2630, Taastrup, Denmark
Tel. 02-999200

HITACHI SALES A.G.
Bahnhofstrasse, 19, 5600 Lenzburg, Switzerland
Tel. 064-513621

HITACHI SALES WARENHANDELS GMBH
A-1180/Wien, Kreuzgasse 27, Austria
Tel. 0222-421670

HITACHI SALES ITALIANA, S.P.A.
Via Ludovico di Breme, 9-20156 Milano Italy
Tel. (02) 30231

HITACHI SALES BELGIUM S.A./N.V.
Chaussee de Namur, 56, B-1400 Nivelles, Belgium
Tel. (3267) 21-71-81, (3267) 21-79-81

HITACHI SALES IBERICA, S.A.
Gran Via Carlos Tercero, 101, 1-1, Barcelona 08028 Spain
Tel. 330-8652

HITACHI PRODUCTIONS MAROC ELECTRONIQUES DOMESTIQUES S.A.
Rue du Havre, Casablanca, Morocco
Tel. 30-73-68, 30-73-57

HITACHI CANARIAS S.A.
Calle San-Francisco No. 19, 38002, Santa Cruz de Tenerife Canary Islands
Tel. 24-64-98

HITACHI SALES (HELLAS), S.A.
110 Syngrou St., Athens, Greece
Tel. 9219082, 9233469

HITACHI SALES (MALAYSIA) SDN, BHD.
Wisma Hitachi No. 2 Lorong 13/6A. 46200 Petaling Jaya, Malaysia
Tel. 7573455

HITACHI (SINGAPORE) PTE., LTD.
18 Pasir Panjang Road #01-03 PSA Multi-Storey Complex, Singapore 0511
Tel. 2738102

HITACHI SALES (THAILAND) LTD.
2240-46, New Petchburi Road, Bangkapi, Hueykuang Bangkok, Thailand
Tel. 314-2741

HITACHI ELECTRIC SERVICE CO., (HONG KONG) LTD
4th Floor Leun Tai Industrial Bldg., 72-76 Kwai Cheong Road Kwai Chung N.T., Hong Kong
Tel. 0-242976, 0-240126

HITACHI SALES AUSTRALIA PTY LTD.
153 Keys Road, Moorabbin, Victoria 3189 Australia
Tel. 555-8722

HITACHI SALES CORPORATION OF AMERICA
Eastern Regional Office
1290 Wall Street West, Lyndhurst, New Jersey 07071, U.S.A.
Tel. 201-935-8980

Mid-Western Regional Office
1400 Morse Ave., Elk Grove Village, Illinois 60007, U.S.A.
Tel. 312-593-1550

Southern Regional Office
510 Plaza Drive, College Park, Georgia 30349, U.S.A.
Tel. 404-763-0360

Headquarters Western Regional Office
401 West Artesia Boulevard, Compton, California 90220 U.S.A.
Tel. 213-537-8383

HITACHI SALES CORPORATION OF HAWAII. INC.
3219 Koapaka Street. Honolulu, Hawaii 96819, U.S.A.
Tel. 808-836-3621

HITACHI (HSC) CANADA INC.
3300 Trans-Canada Highway, Pointe Claire, Quebec, H9R 1B1, Canada
Tel. 514-697-9150

Hitachi Sales Centroamericana, S.A.
HITACHI ELECTRONICA CENTROAMERICANA, S.A.
San Rafael de Escazu, (Apartado 10272), San Jose, Costa Rica
Tel. 28-20-11, 28-00-37

Hitachi Sales Corporation de Panama, S.A.
INTERNATIONAL HITACHI SALES PANAMA, LTD.
PRODUCTOS HITACHI, S.A.
Apartado 7657 Panama 5 Panama City, Rep. of Panama
Tel. 61-3100, 61-4305

HITACHI-FRANCE
(RADIO-TV ELECTRO-MENAGER) S.A.
95-101 Rue Charles Michels,
93200 SAINT-DENIS,
France
Tel. 4821 6015

HITACHI LTD. TOKYO JAPAN
Head Office: THE HITACHI ATAGO BLDG.
No. 15-12, 2-Chome Nishi-Shinbashi
Minato-ku, Tokyo 105, Japan
Tel. Tokyo (03) 502-2111

Printed in Japan (G