SERVICE MANUAL

FISHER®

INTEGRATED STEREO AMPLIFIER

CA-862A
(U.S.A.)

132 299 38

SPECIFICATIONS

Remote Control (REM-862)	14-function, wireless remote control
POWER AMPLIFIER SECTION	
Minimum RMS sine wave power per channel within stated bandwidth at no more than stated distortion and with 8-ohm load	120 Watts
Power Bandwidth	20 Hz – 20 kHz
Total Harmonic Distortion	0.09 %
I.M. Distortion	0.09 %
Speaker Damping	> 20
PREAMPLIFIER SECTION	
Frequency Response	
Phono (RIAA)	±1 dB
Aux (20 Hz – 20 kHz)	±1 dB
Input Sensitivity and Impedance	
Phono	2.5 mV/50 kΩ
Tape Monitor	150 mV/50 kΩ
Tuner/Video/CD	150 mV/50 kΩ
Phono Max. Input Capability	150 mV
Graphic Equalizer	
63Hz	±10 dB
250Hz	±10 dB
1KHz	±10 dB
4KHz	±10 dB
16KHz	±10 dB
Loudness Contour (100 Hz/10 kHz)	+8 dB/+4 dB
Hum & Noise (IHF Short Circuit, A Network)	
Phono	65 dB
Tape Monitor	85 dB
Tuner/Video/CD	85 dB
GENERAL	
Power Requirements (50/60 Hz)	120 VAC ±10 %
Power Consumption	550 Watts
AC Outlets	2
Dimensions (W x H x D)	17.33" x 4.25" x 12.4"
Weight (approx.)	17.9 lbs.

– Specifications and design are subject to change without notice.–

REFERENCE No. WM-19385

FISHER CORPORATION, 21314 LASSEN STREET • CHATSWORTH • CALIFORNIA 91311

www.hifiengine.com

CABINET & CHASSIS EXPLODED VIEW

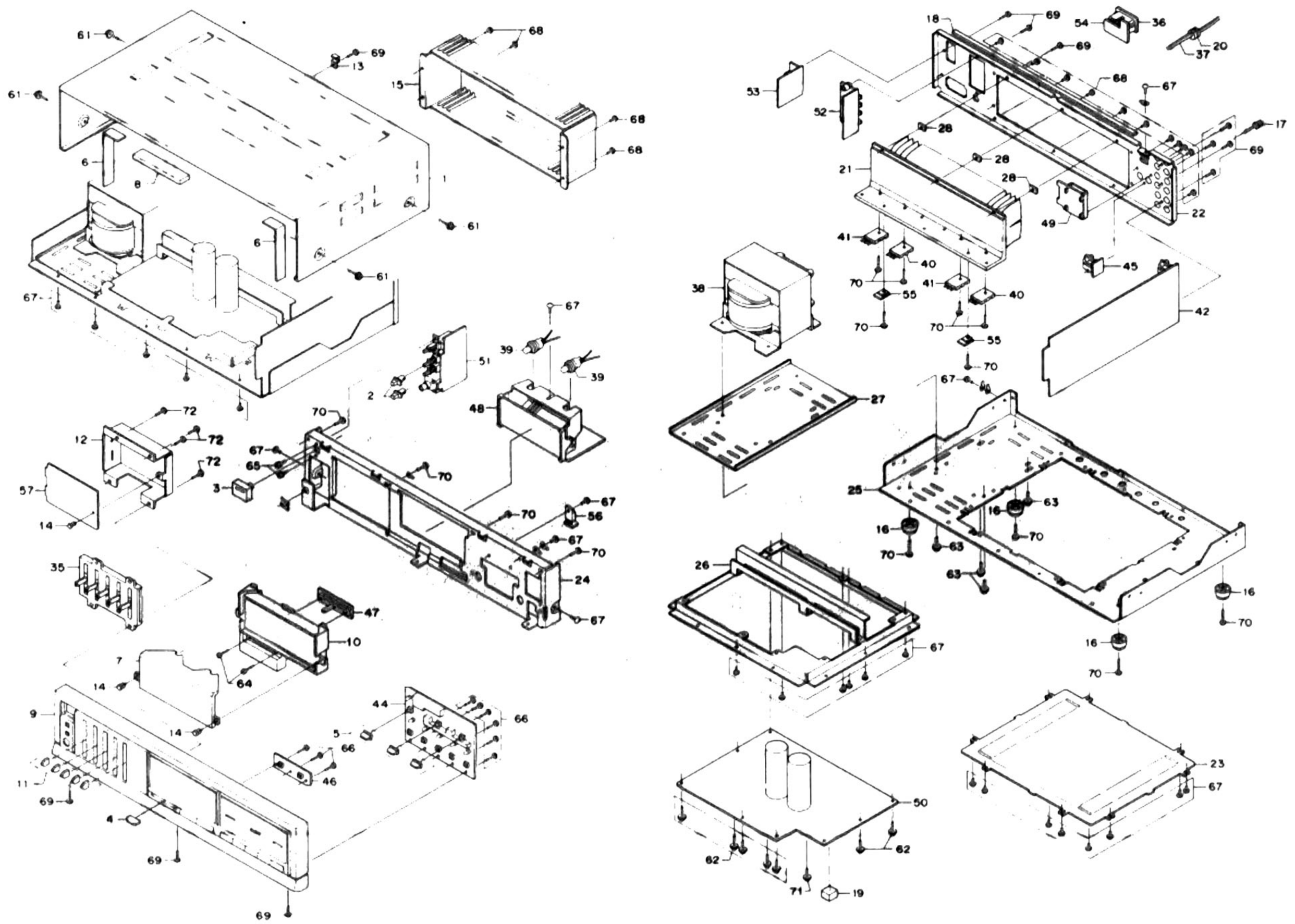

POWER AMPLIFIER ADJUSTMENT

BEFORE ADJUSTMENT

Unplug the AC power cord and set the front panel controls as follows:

- Power switch to OFF position.
- Set the SPEAKERS switch to the OFF position.
- Set the volume level to minimum level by Pressing the VOLUME DOWN button.
- IDLING CURRENT ADJUSTMENT VR501/VR502 (on the Main Amplifier P.C.Board) setting to mechanical center position.
- Connect the AC power cord and Power Switch to the ON position.

IDLING CURRENT ADJUSTMENT

This adjustment is very sensitive to changes in ambient temperature. Allow set to operate for 2 minutes before attempting this alignment.

LEFT AMPLIFIER

1) Connect the DC Voltmeter between Pins 19 and 21 on the Main Amplifier P.C.Board.
2) Adjust the VR501 for an indication of 9mV (7mV ~15mV) on the DC Voltmeter.

RIGHT AMPLIFIER

1) Connect the DC Voltmeter between Pins 20 and 22 on the Main Amplifier P.C.Board.
2) Adjust the VR502 for an indication of 9mV (7mV ~15mV) on the DC Voltmeter.

www.hifiengine.com

CABINET & CHASSIS PARTS LIST

PRODUCT SAFETY NOTICE

Each precaution in this manual should be followed during servicing. Components identified with the IEC symbol ⚠ in the parts list and the schematic diagram designate components in which safety can be of special significance. When replacing a component identified with ⚠, use only the replacement parts designated, or parts with the same ratings of resistance, wattage or voltage that are designated in the parts list in this manual.
Leakage-current or resistance measurements must be made to determine that exposed parts are acceptably insulated from the supply circuit before returning the product to the customer.

Ref. No.	Part No.	Description	Q'ty
	PACKAGE		
	3-9415-10300	Bag Polyethylene	1
	131-6-3009-36090	Pad (Bottom)	1
	131-6-3009-36420	Pad (Rear)	1
	131-6-3069-16350	Patching Sheet	1
	131-6-9459-00300	Rubber Band	1
	141-6-1189-12925	Box Corrugate-Exp.	1
	141-6-1469-11700	Pad (Front)	1
	141-6-1469-11800	Pad (Rear)	1
	141-6-2519-22290	Sheet Polyethylene	1
	ACCESSORIES		
	4-1929-70260	REM-862 (Remote Control)	1
	4-6614-00040	Dry Cell Pack	1
	131-2-7103-40811	Label (120W)	1
	131-6-2719-10401	Bag Fan	1
	131-6-3069-17100	Patching Sheet	1
	131-6-4159-31000	Note	1
	131-6-4159-34100	Notes	1
	131-6-4159-40600	Catalog (VTR)	1
	131-6-4319-10802	Service Station List	1
	131-6-4519-14400	Warranty Card	1
	131-6-4939-00200	Customer Card	1
	141-6-4419-23947	Label Bar Code	1
	142-6-4119-33394	Explanatory Booklet	1
	CABINET & CHASSIS		
	4-2379-21520	Terminal Lug	1
	131-2-7103-26100	Label	1
	131-2-7103-46700	Label (UL Caution)	1
1	131-2-1410-35400	Cover	1
2	131-2-1601-69601	Knob (Speaker Selector)	2
3	131-2-1601-93300	Knob (Power Switch)	1
4	131-2-1601-93400	Knob (Balance)	1
5	131-2-1601-99800	Knob Tact	3
6	131-2-3202-13400	Metal Reinforce	2
7	131-2-3608-16409	Filter	1
8	131-2-5205-33300	Cushion	1
9	141-0-1129-29305	Cabinet Front Assy	1
	141-2-1129-56902	Cabinet Front	1
	141-2-1449-61295	Plate Front	1
	141-2-1319-52300	Window	1
	131-2-3608-16600	Filter	1
	141-2-1449-65010	Plate Decorate	1
	131-2-1601-99700	Knob Volume	1
	131-2-1601-91800	Knob Function	1
	4-2359-78079	Connector 1P Assy	1
	4-2352-02721	Connector 1P Assy	1
	411 020 5508	SCR S-TPG BRZ 2.6X6	1
10	141-0-3519-27100	Mount P.C.B. Assy	1
	141-2-3519-86100	Mount P.C.B.	1
	141-2-1449-65110	Screen LCD	1
	141-2-3229-62500	Plate Shield	1
	4-2359-79034	Connector 1P Assy	1
11	141-2-1659-46200	Knob Slide (Equalizer)	5
12	141-2-3889-04800	Bracket Mount PCB	1
13	141-2-3159-03300	Bracket Cover	1
14	131-2-4221-00600	Rivet	2
15	131-2-1410-34833	Cover Heat Sink	1
16	131-2-1801-14100	Leg	4
17	131-2-4201-17800	Screw Ground	1
18	131-2-5205-15800	Cushion	1
19	131-2-5205-35900	Cushion	1
20	131-2-6111-14200	Bushing (4N-4)	1
21	131-2-6201-38500	Heat Sink	1
22	141-2-1219-40903	Panel Rear	1
23	141-2-1259-11200	Bottom Cover	1
24	141-2-2149-33100	Panel Front	1
25	141-2-3119-31600	Chassis	1
26	141-2-3129-06600	Sub Chassis	1
27	141-2-3159-05800	Metal Reinforce	1
28	141-2-4359-41200	Plate Sever	3
35	4-2229-76231	Slide Volume Unit	1
36	⚠ 4-2359-78640	AC Socket With/pola (AC Outlet)	1
37	⚠ 4-2432-00422	Power Cord	1
38	⚠ 4-2512-25001	Power Trans (Main)	1
39	4-6129-70721	Lamp	2
40	405 017 7903	TR 2SC3281-R [Q515, Q516]	2
or	405 060 2603	TR 2SD1975-Q [Q515, Q516]	2
41	405 031 2205	TR 2SA1302-R [Q517, Q518]	2
or	405 031 9105	TR 2SB1163-Q [Q517, Q518]	2
42	141-0-1939-22980	Input P.C.B. Assy	1
43	141-0-1939-22990	Graphic EQ. P.C.B. Assy	1
44	141-0-1939-23000	Control P.C.B. Assy	1
45	141-0-1939-23010	Pin Jack P.C.B. Assy	1
46	141-0-1939-23020	Volume SW. P.C.B. Assy	1
47	141-0-1939-23030	Balance P.C.B. Assy	1
48	141-0-1939-23040	Display P.C.B. Assy	1
49	141-0-1939-23050	Remote Control P.C.B. Asssy	1
50	141-0-1939-20406	Main Amp. P.C.B. Assy	1
51	141-0-1939-20410	Power SW. P.C.B. Assy	1
52	141-0-1939-20420	Speaker Terminal P.C.B. Assy	1
53	141-0-1939-20430	AC Supply P.C.B. Assy	1
54	141-0-1939-20440	AC Outlet P.C.B. Assy	1
55	141-0-1939-20450	Bias P.C.B. Assy	2
56	141-0-1939-22260	Transistor P.C.B. Assy	1
57	141-0-1939-23060	Volume P.C.B. Assy	1
61	141-2-4219-38400	Screw, Bind Hd. Tapping-B, +M4.0x8 Sems BLK	4
62	131-2-4201-25201	Screw, Brazier Hd. Tapping-B, +M3.0x8 Sems	7
63	141-2-4219-43300	Screw, Bind Hd. Tapping-C, +M4.0x10 Sems	4
64	411 002 4901	SCR PAN 2X4	2
65	411 003 8908	SCR PAN+SW 3X6	2
66	411 020 5706	SCR S-TPG BRZ 2.6X8	9
67	411 020 7700	SCR S-TPG BRZ 3X6	26
68	411 020 7908	SCR S-TPG BRZ 3X6	15
69	411 020 8202	SCR S-TPG BRZ 3X8	11
70	411 020 5904	SCR S-TPG BRZ 3X10	14
71	411 020 8004	SCR S-TPG BRZ 3X8	1
72	411 020 5201	SCR S-TPG BRZ 2.6X10	4

NOTES:

1. Parts order must contain Model Number, Part Number and Description.
2. Ordering quantity of screws and resistors must be multiple of 10 pcs.

www.hifiengine.com

P.C.BOARD PARTS LIST

Ref. No.	Part No.	Description	Q'ty
	INPUT P.C.B. ASSY		
42	141-0-1939-22980	Input P.C.B. Assy	1
	4-2259-71080	Crystal 4.194304MHz	1
	4-2352-01700	Pin Jack 4P (PHONO, TUNER)	1
	4-2352-01700	Pin Jack 4P (CD, VIDEO)	1
	4-2352-01700	Pin Jack 4P (TAPE)	1
	4-2359-79240	Connector 8P Assy	1
CN101	4-2369-75580	Plug 5P	1
CN102	4-2352-02650	Socket Jumper 4P	1
CN103	4-2369-73150	Plug 5P	1
CN104	4-2369-73980	Plug 4P	1
CN105	4-2369-73140	Plug 4P	1
CN106	4-2369-73160	Plug 6P	1
D106	407 004 9105	DIODE DSF10C-BT	1
D107	407 004 9105	DIODE DSF10C-BT	1
D108	407 004 9105	DIODE DSF10C-BT	1
D109	407 005 3805	DIODE DS442-BT	1
D110	407 008 7206	DIODE MA700	1
IC101	409 070 4800	IC NJM2068DD	1
or	409 057 4601	IC UPC4570HA	1
IC102	409 072 0909	IC TC9163N	1
IC103	410 014 9805	IC TMP47C460AN-1	1
Q101	405 004 5004	TR 2SA608-G-NP	1
Q102	405 019 3804	TR 2SC536-G-NP	1
or	405 032 8008	TR 2SC1740-LNS	1
Q103	405 004 5004	TR 2SA608-G-NP	1
Q104	405 019 3804	TR 2SC536-G-NP	1
or	405 032 8008	TR 2SC1740-LNS	1
Q105	405 008 8001	TR 2SB822-R	1
or	405 032 3102	TR 2SB911-M	1
Q106	405 008 8001	TR 2SB822-R	1
or	405 032 3102	TR 2SB911-M	1
Q107	405 008 8001	TR 2SB822-R	1
or	405 032 3102	TR 2SB911-M	1
Q108	405 008 8001	TR 2SB822-R	1
or	405 032 3102	TR 2SB911-M	1
Q109	405 008 8001	TR 2SB822-R	1
or	405 032 3102	TR 2SB911-M	1
Q110	405 008 8001	TR 2SB822-R	1
or	405 032 3102	TR 2SB911-M	1
Q211	405 032 8008	TR 2SC1740-LNS	1
Q212	405 032 8008	TR 2SC1740-LNS	1
C103	403 018 8509	CERAMIC 220P K 50V	1
C104	403 018 8509	CERAMIC 220P K 50V	1
C105	403 047 1502	ELECT 4.7U M 25V	1
C106	403 047 1502	ELECT 4.7U M 25V	1
C107	403 018 8509	CERAMIC 220P K 50V	1
C108	403 018 8509	CERAMIC 220P K 50V	1
C109	403 039 2906	ELECT 47U M 6.3V	1
C110	403 039 2906	ELECT 47U M 6.3V	1
C111	403 059 0401	POLYESTER 0.018U K 50V	1
C112	403 059 0401	POLYESTER 0.018U K 50V	1
C113	403 061 8709	POLYESTER 4700P K 50V	1
C114	403 061 8709	POLYESTER 4700P K 50V	1
C115	403 047 1502	ELECT 4.7U M 25V	1
C116	403 047 1502	ELECT 4.7U M 25V	1
C119	403 045 0507	ELECT 100U M 25V	1
C120	403 045 0507	ELECT 100U M 25V	1
C141	403 069 8404	CERAMIC 0.01U Z 50V	1
C143	403 042 0302	ELECT 10U M 16V	1
C144	403 069 8404	CERAMIC 0.01U Z 50V	1
C145	403 043 3104	ELECT 2200U M 16V	1
C146	403 048 7602	ELECT 0.47U M 50V	1
C147	403 049 1609	ELECT 1U M 50V	1
C148	403 018 4204	CERAMIC 22P K 50V	1
C149	403 018 4204	CERAMIC 22P K 50V	1

Ref. No.	Part No.	Description	Q'ty
C150	403 057 0908	POLYESTER 0.01U K 50V	1
C151	403 073 6502	CERAMIC 470P K 50V	1
C152	403 073 6502	CERAMIC 470P K 50V	1
C153	403 073 6502	CERAMIC 470P K 50V	1
C154	403 073 7202	CERAMIC 470P K 50V	1
C160	403 074 2701	CERAMIC 0.047U Z 50V	1
C211	403 047 1502	ELECT 4.7U M 25V	1
C212	403 047 1502	ELECT 4.7U M 25V	1
C213	403 047 1502	ELECT 4.7U M 25V	1
C214	403 047 1502	ELECT 4.7U M 25V	1
RB101	4-2219-71760	Resistor 10K-6	1
R101	401 024 7707	CARBON 100K JA 1/6W	1
R102	401 024 7707	CARBON 100K JA 1/6W	1
R103	401 024 7707	CARBON 100K JA 1/6W	1
R104	401 024 7707	CARBON 100K JA 1/6W	1
R105	401 026 3905	CARBON 330 JA 1/6W	1
R106	401 026 3905	CARBON 330 JA 1/6W	1
R107	401 025 8703	CARBON 220K JA 1/6W	1
R108	401 025 8703	CARBON 220K JA 1/6W	1
R109	401 025 1902	CARBON 15K JA 1/6W	1
R110	401 025 1902	CARBON 15K JA 1/6W	1
R111	401 024 7707	CARBON 100K JA 1/6W	1
R112	401 024 7707	CARBON 100K JA 1/6W	1
R113	401 024 7004	CARBON 1K JA 1/6W	1
R114	401 024 7004	CARBON 1K JA 1/6W	1
R115	401 024 7004	CARBON 1K JA 1/6W	1
R116	401 024 7004	CARBON 1K JA 1/6W	1
R117	401 027 6103	CARBON 680K JA 1/6W	1
R118	401 027 6103	CARBON 680K JA 1/6W	1
R119	401 024 7004	CARBON 1K JA 1/6W	1
R120	401 024 7004	CARBON 1K JA 1/6W	1
R121	401 027 6103	CARBON 680K JA 1/6W	1
R122	401 027 6103	CARBON 680K JA 1/6W	1
R123	401 024 7004	CARBON 1K JA 1/6W	1
R124	401 024 7004	CARBON 1K JA 1/6W	1
R125	401 026 4902	CARBON 330K JA 1/6W	1
R126	401 026 4902	CARBON 330K JA 1/6W	1
R127	401 024 7004	CARBON 1K JA 1/6W	1
R128	401 024 7004	CARBON 1K JA 1/6W	1
R129	401 025 8703	CARBON 220K JA 1/6W	1
R130	401 025 8703	CARBON 220K JA 1/6W	1
R131	401 024 7004	CARBON 1K JA 1/6W	1
R132	401 024 7004	CARBON 1K JA 1/6W	1
R133	401 027 9005	CARBON 82K JA 1/6W	1
R134	401 027 9005	CARBON 82K JA 1/6W	1
R135	401 016 2604	CARBON 220 JA 1/4W	1
R136	401 016 2604	CARBON 220 JA 1/4W	1
R137	401 024 7004	CARBON 1K JA 1/6W	1
R138	401 024 7004	CARBON 1K JA 1/6W	1
R141	401 024 7400	CARBON 10K JA 1/6W	1
R142	401 024 7400	CARBON 10K JA 1/6W	1
R143	401 024 7400	CARBON 10K JA 1/6W	1
R144	401 024 7400	CARBON 10K JA 1/6W	1
R145	401 024 7400	CARBON 10K JA 1/6W	1
R146	401 024 7400	CARBON 10K JA 1/6W	1
R153	401 024 7400	CARBON 10K JA 1/6W	1
R154	401 024 7400	CARBON 10K JA 1/6W	1
R155	401 024 7400	CARBON 10K JA 1/6W	1
R156	401 024 7400	CARBON 10K JA 1/6W	1
R157	401 024 7400	CARBON 10K JA 1/6W	1
R158	401 024 7400	CARBON 10K JA 1/6W	1
R159	401 025 1605	CARBON 1.5K JA 1/6W	1
R160	401 025 1605	CARBON 1.5K JA 1/6W	1
R161	401 025 1605	CARBON 1.5K JA 1/6W	1
R162	401 025 1605	CARBON 1.5K JA 1/6W	1
R163	401 025 1605	CARBON 1.5K JA 1/6W	1

www.hifiengine.com

P.C.BOARD PARTS LIST (Continued)

Ref. No.	Part No.	Description	Q'ty
R164	401 025 1605	CARBON 1.5K JA 1/6W	1
R165	401 094 1209	OXIDE-MT 390 JB 1W	1
R166	401 094 1209	OXIDE-MT 390 JB 1W	1
R167	401 094 1308	OXIDE-MT 820 JB 2W	1
R168	401 094 1308	OXIDE-MT 820 JB 2W	1
R169	401 094 1308	OXIDE-MT 820 JB 2W	1
R170	401 094 1308	OXIDE-MT 820 JB 2W	1
R171	401 027 0507	CARBON 470K JA 1/6W	1
R172	401 024 7707	CARBON 100K JA 1/6W	1
R173	401 024 6700	CARBON 100 JA 1/6W	1
R174	401 024 7400	CARBON 10K JA 1/6W	1
R175	401 018 3807	CARBON 3.3K JA 1/4W	1
R176	401 025 0608	CARBON 1.3K JA 1/6W	1
R177	401 025 7805	CARBON 2.2K JA 1/6W	1
R178	401 026 9600	CARBON 470 JA 1/6W	1
R179	401 024 7400	CARBON 10K JA 1/6W	1
R180	401 024 7400	CARBON 10K JA 1/6W	1
R181	401 024 7400	CARBON 10K JA 1/6W	1
R182	401 024 7400	CARBON 10K JA 1/6W	1
R193	401 024 7707	CARBON 100K JA 1/6W	1
R194	401 024 7400	CARBON 10K JA 1/6W	1
R195	401 024 7400	CARBON 10K JA 1/6W	1
R231	401 020 0801	CARBON 470 JA 1/4W	1
R232	401 020 0801	CARBON 470 JA 1/4W	1
R233	401 025 2305	CARBON 150K JA 1/6W	1
R234	401 025 2305	CARBON 150K JA 1/6W	1
R235	401 026 9907	CARBON 4.7K JA 1/6W	1
R236	401 026 9907	CARBON 4.7K JA 1/6W	1
R237	401 024 7707	CARBON 100K JA 1/6W	1
R238	401 024 7707	CARBON 100K JA 1/6W	1
	GRAPHIC EQ. P.C.B. ASSY		
43	141-0-1939-22990	Graphic EQ. P.C.B. Assy	1
	4-2359-78820	Socket Jumper 8P	2
CN301	4-2369-73670	Plug 3P	1
IC301	409 036 7906	IC M5227P	1
IC302	409 036 7906	IC M5227P	1
PC301	4-2352-02859	Connector 5P Assy	1
PC302	4-2359-76472	Connector 5P Assy	1
C301	403 068 9402	CERAMIC 100P K 50V	1
C302	403 068 9402	CERAMIC 100P K 50V	1
C303	403 047 1502	ELECT 4.7U M 25V	1
C304	403 047 1502	ELECT 4.7U M 25V	1
C307	403 049 3900	ELECT 1.5U M 50V	1
C308	403 049 3900	ELECT 1.5U M 50V	1
C309	403 048 5400	ELECT 0.33U M 50V	1
C310	403 048 5400	ELECT 0.33U M 50V	1
C311	403 063 8301	POLYESTER 0.082U K 50V	1
C312	403 063 8301	POLYESTER 0.082U K 50V	1
C313	403 059 6809	POLYESTER 0.022U K 50V	1
C314	403 059 6809	POLYESTER 0.022U K 50V	1
C315	403 061 8907	POLYESTER 4700P K 50V	1
C316	403 061 8907	POLYESTER 4700P K 50V	1
C317	403 111 7607	POLYESTER 0.068U K 50V	1
C318	403 111 7607	POLYESTER 0.068U K 50V	1
C319	403 059 0609	POLYESTER 0.018U K 50V	1
C320	403 059 0609	POLYESTER 0.018U K 50V	1
C321	403 061 2806	POLYESTER 3900P K 50V	1
C322	403 061 2806	POLYESTER 3900P K 50V	1
C323	403 056 8806	POLYESTER 1000P K 50V	1
C324	403 056 8806	POLYESTER 1000P K 50V	1
C325	403 072 8200	CERAMIC 330P K 50V	1
C326	403 072 8200	CERAMIC 330P K 50V	1
C327	403 045 0606	ELECT 100U M 25V	1
C328	403 045 0606	ELECT 100U M 25V	1

Ref. No.	Part No.	Description	Q'ty
C329	403 069 8404	CERAMIC 0.01U Z 50V	1
C330	403 069 8404	CERAMIC 0.01U Z 50V	1
R301	401 026 9907	CARBON 4.7K JA 1/6W	1
R302	401 026 9907	CARBON 4.7K JA 1/6W	1
R303	401 026 9907	CARBON 4.7K JA 1/6W	1
R304	401 026 9907	CARBON 4.7K JA 1/6W	1
R305	401 024 7004	CARBON 1K JA 1/6W	1
R306	401 024 7004	CARBON 1K JA 1/6W	1
R307	401 024 7004	CARBON 1K JA 1/6W	1
R308	401 024 7004	CARBON 1K JA 1/6W	1
R309	401 024 7004	CARBON 1K JA 1/6W	1
R310	401 024 7004	CARBON 1K JA 1/6W	1
R311	401 024 7004	CARBON 1K JA 1/6W	1
R312	401 024 7004	CARBON 1K JA 1/6W	1
R313	401 024 7004	CARBON 1K JA 1/6W	1
R314	401 024 7004	CARBON 1K JA 1/6W	1
R315	401 026 4308	CARBON 3.3K JA 1/6W	1
R316	401 026 4308	CARBON 3.3K JA 1/6W	1
R317	401 024 7707	CARBON 100K JA 1/6W	1
R318	401 024 7707	CARBON 100K JA 1/6W	1
R319	401 024 6700	CARBON 100 JA 1/6W	1
R320	401 024 6700	CARBON 100 JA 1/6W	1
R321	401 026 4308	CARBON 3.3K JA 1/6W	1
R322	401 027 5205	CARBON 680 JA 1/6W	1
R323	401 022 1905	CARBON 680 JA 1/4W	1
	CONTROL P.C.B. ASSY		
44	141-0-1939-23000	Control P.C.B. Assy	1
	131-2-4208-28000	Spacer	6
	131-2-4208-49500	Spacer	1
	131-2-4208-50900	Spacer (LED)	1
	141-2-3229-62000	Cover Shield	1
	141-2-3229-63400	Plate Shield	1
CN203	4-2359-76472	Connector 5P Assy	1
CN204	4-2359-76745	Connector 4P Assy	1
CN205	4-2359-77800	Connector 4P Assy	1
CN206	4-2352-02209	Connector 6P Assy	1
S201	4-2319-78471	Tact Switch (Power Standby)	1
S202	4-2319-78471	Tact Switch (Muting)	1
S203	4-2319-78471	Tact Switch (Loudness)	1
S204	4-2312-05300	Keyboard Switch 6mm (Tape Monitor)	1
S205	4-2312-05300	Keyboard Switch 6mm (Video/Aux)	1
S206	4-2312-05300	Keyboard Switch 6mm (CD)	1
S207	4-2312-05300	Keyboard Switch 6mm (Tuner)	1
S208	4-2312-05300	Keyboard Switch 6mm (Phono)	1
D201	407 065 0905	PHOTO DIODE SPS-501C-1	1
D202	407 063 2109	LED SLR-54VT3 (Power Standby)	1
D203	407 005 3805	DIODE DS442-BT	1
D204	407 005 3805	DIODE DS442-BT	1
D205	407 005 3805	DIODE DS442-BT	1
D206	407 035 3400	LED SLP-673B-51 (Volume Level)	1
D207	407 035 3400	LED SLP-673B-51 (Volume Level)	1
D208	407 035 3400	LED SLP-673B-51 (Volume Level)	1
D209	407 035 3400	LED SLP-673B-51 (Volume Level)	1
D210	407 035 3400	LED SLP-673B-51 (Volume Level)	1
D211	407 035 3400	LED SLP-673B-51 (Volume Level)	1
D212	407 035 3400	LED SLP-673B-51 (Volume Level)	1
D213	407 035 3400	LED SLP-673B-51 (Volume Level)	1
D214	407 028 8900	LED SLP-173B-01 (Muting)	1
D215	407 028 8900	LED SLP-173B-01 (Loudness)	1
D216	407 063 2109	LED SLR-54VT3 (Tape Monitor)	1
D217	407 063 1805	LED SLR-54PT3 (Phono)	1
D218	407 063 1805	LED SLR-54PT3 (Tuner)	1
D219	407 063 1805	LED SLR-54PT3 (CD)	1
D220	407 063 1805	LED SLR-54PT3 (Video/Aux)	1

www.hifiengine.com

P.C.BOARD PARTS LIST (Continued)

Ref. No.	Part No.	Description	Q'ty
IC201	409 056 9409	IC UPC1490HA	1
Q201	405 012 8608	TR 2SC2021-S	1
Q202	405 012 8608	TR 2SC2021-S	1
Q203	405 008 8001	TR 2SB822-R	1
or	405 032 3102	TR 2SB911-M	1
Q204	405 008 8001	TR 2SB822-R	1
or	405 032 3102	TR 2SB911-M	1
Q205	405 008 8001	TR 2SB822-R	1
or	405 032 3102	TR 2SB911-M	1
Q206	405 008 8001	TR 2SB822-R	1
or	405 032 3102	TR 2SB911-M	1
C201	403 048 3406	ELECT 0.22U M 50V	1
C202	403 046 3101	ELECT 3.3U M 25V	1
C203	403 072 8200	CERAMIC 330P K 50V	1
C204	403 038 2709	ELECT 100U M 6.3V	1
C205	403 038 2709	ELECT 100U M 6.3V	1
R201	401 026 8108	CARBON 4.7 JA 1/6W	1
R202	401 025 3500	CARBON 160K JA 1/6W	1
R203	401 024 7400	CARBON 10K JA 1/6W	1
R204	401 012 4503	CARBON 100 JA 1/4W	1
R205	401 020 0801	CARBON 470 JA 1/4W	1
R206	401 013 7305	CARBON 120K JA 1/4W	1
R207	401 027 0309	CARBON 47K JA 1/6W	1
R208	401 012 7009	CARBON 10K JA 1/4W	1
R209	401 024 7707	CARBON 100K JA 1/6W	1
R210	401 024 7707	CARBON 100K JA 1/6W	1
R211	401 024 7707	CARBON 100K JA 1/6W	1
R212	401 012 8105	CARBON 100K JA 1/4W	1
R213	401 012 7009	CARBON 10K JA 1/4W	1
R214	401 024 7400	CARBON 10K JA 1/6W	1
R215	401 024 7400	CARBON 10K JA 1/6W	1
R216	401 024 7400	CARBON 10K JA 1/6W	1
R217	401 012 7009	CARBON 10K JA 1/4W	1
R218	401 012 7009	CARBON 10K JA 1/4W	1
R219	401 012 7009	CARBON 10K JA 1/4W	1
R220	401 014 4105	CARBON 1.5K JA 1/4W	1
R221	401 014 4105	CARBON 1.5K JA 1/4W	1
R222	401 014 4105	CARBON 1.5K JA 1/4W	1
R223	401 014 4105	CARBON 1.5K JA 1/4W	1
	PIN JACK P.C.B. ASSY		
45	141-0-1939-23010	Pin Jack P.C.B. Assy	1
	4-2352-02680	Pin Jack 2P (Video Rec Out)	1
R801	401 024 7004	CARBON 1K JA 1/6W	1
R802	401 024 7004	CARBON 1K JA 1/6W	1
R803	401 027 6103	CARBON 680K JA 1/6W	1
R804	401 027 6103	CARBON 680K JA 1/6W	1
	VOLUME SW. P.C.B. ASSY		
46	141-0-1939-23020	Volume SW. P.C.B. Assy	1
S801	4-2312-05300	Keyboard Switch 6mm (Volume Up)	1
S802	4-2312-05300	Keyboard Switch 6mm (Volume Down)	1
	BALANCE P.C.B. ASSY		
47	141-0-1939-23030	Balance P.C.B. Assy	1
	4-2229-75980	Slide VR (W-200kΩ, Balance)	1
PC304	4-2359-77390	Connector 3P Assy	1
	DISPLAY P.C.B. ASSY		
48	141-0-1939-23040	Display P.C.B. Assy	1
	131-2-6306-12100	Reflector	1
	131-2-6308-25800	Filter LCD	1
CN401	4-2352-02650	Socket Jumper 4P	1
LCD1	4-9549-70120	Lcd, Ftd6497	1
D401	407 008 0405	DIODE GMB01-BT	1
D403	407 008 0405	DIODE GMB01-BT	1

Ref. No.	Part No.	Description	Q'ty
D404	407 008 0405	DIODE GMB01-BT	1
D405	407 008 0405	DIODE GMB01-BT	1
D406	407 008 0405	DIODE GMB01-BT	1
D407	407 008 0405	DIODE GMB01-BT	1
IC401	409 018 5104	IC LA6458SS	1
IC403	409 018 5104	IC LA6458SS	1
IC404	409 018 5104	IC LA6458SS	1
IC405	409 074 1102	IC LC7561	1
C401	403 049 1609	ELECT 1U M 50V	1
C402	403 039 3200	ELECT 47U M 6.3V	1
C403	403 049 1609	ELECT 1U M 50V	1
C407	403 061 2608	POLYESTER 3900P K 50V	1
C408	403 061 2608	POLYESTER 3900P K 50V	1
C409	403 049 2002	ELECT 1U M 50V	1
C410	403 058 3700	POLYESTER 0.015U K 50V	1
C411	403 058 3700	POLYESTER 0.015U K 50V	1
C412	403 049 1609	ELECT 1U M 50V	1
C413	403 056 8608	POLYESTER 1000P K 50V	1
C414	403 056 8608	POLYESTER 1000P K 50V	1
C415	403 049 1609	ELECT 1U M 50V	1
C416	403 060 1008	POLYESTER 2700P K 50V	1
C417	403 060 1008	POLYESTER 2700P K 50V	1
C418	403 049 1609	ELECT 1U M 50V	1
C419	403 056 8608	POLYESTER 1000P K 50V	1
C420	403 056 8608	POLYESTER 1000P K 50V	1
C421	403 049 1609	ELECT 1U M 50V	1
C425	403 047 4206	ELECT 47U M 25V	1
C426	403 047 4206	ELECT 47U M 25V	1
C427	403 047 9607	ELECT 0.1U M 50V	1
C428	403 047 9904	ELECT 0.1U M 50V	1
C429	403 060 6607	POLYESTER 3300P K 50V	1
R401	401 024 7707	CARBON 100K JA 1/6W	1
R402	401 027 5908	CARBON 68K JA 1/6W	1
R403	401 027 5205	CARBON 680 JA 1/6W	1
R404	401 025 8703	CARBON 220K JA 1/6W	1
R409	401 025 4903	CARBON 180K JA 1/6W	1
R410	401 026 1307	CARBON 27K JA 1/6W	1
R411	401 024 8001	CARBON 1M JA 1/6W	1
R412	401 025 8703	CARBON 220K JA 1/6W	1
R413	401 025 4903	CARBON 180K JA 1/6W	1
R414	401 026 1307	CARBON 27K JA 1/6W	1
R415	401 024 8001	CARBON 1M JA 1/6W	1
R416	401 025 8703	CARBON 220K JA 1/6W	1
R417	401 025 4903	CARBON 180K JA 1/6W	1
R418	401 026 1307	CARBON 27K JA 1/6W	1
R419	401 024 8001	CARBON 1M JA 1/6W	1
R420	401 025 8703	CARBON 220K JA 1/6W	1
R421	401 025 4606	CARBON 18K JA 1/6W	1
R422	401 026 1000	CARBON 2.7K JA 1/6W	1
R423	401 024 7707	CARBON 100K JA 1/6W	1
R424	401 025 8703	CARBON 220K JA 1/6W	1
R425	401 024 7400	CARBON 10K JA 1/6W	1
R426	401 025 7805	CARBON 2.2K JA 1/6W	1
R427	401 027 3003	CARBON 56K JA 1/6W	1
R428	401 025 8703	CARBON 220K JA 1/6W	1
R433	401 019 1000	CARBON 390 JA 1/4W	1
R434	401 019 1000	CARBON 390 JA 1/4W	1
R437	401 027 5205	CARBON 680 JA 1/6W	1
R438	401 027 5908	CARBON 68K JA 1/6W	1
	REMOTE CONTROL P.C.B. ASSY		
49	141-0-1939-23050	Remote Control P.C.B. Assy	1
	4-2369-73140	Plug 4P (CD)	1
	4-2369-73150	Plug 5P (Tuner)	1
	141-2-3889-05900	Brkt Connect PCB	1

www.hifiengine.com

P.C.BOARD PARTS LIST (Continued)

Ref. No.	Part No.	Description	Q'ty
	MAIN P.C.B. ASSY		
50	141-0-1939-20406	Main P.C.B. Assy	1
	4-2359-23000	Fuse Holder	10
	⚠ 4-2512-23700	Power Trans (Sub)	1
	111-2-6220-11100	Wire Wrap Terminal	16
	131-2-6114-00200	Cover Safety (for C557)	1
	4-2439-73064	Wire 3 Parallel	1
F501	⚠ 4-2349-20912	Fuse ST6 5.0A	1
F502	⚠ 4-2342-00010	Fuse 1.0A	1
F503	⚠ 4-2342-00010	Fuse 1.0A	1
F504	⚠ 4-2342-00360	Fuse SS6 6.3A	1
F505	⚠ 4-2342-00360	Fuse SS6 6.3A	1
L501	4-2552-00650	AF Coil (2μH)	1
L502	4-2552-00650	AF Coil (2μH)	1
VR501	4-2222-01280	Potentiometer (B-100Ω)	1
VR502	4-2222-01280	Potentiometer (B-100Ω)	1
XH502	4-2362-00900	Plug 8P	1
RE501	4-2329-70430	Relay	1
RE502	4-2329-70441	Relay	1
D501	407 008 0405	DIODE GMB01-BT	1
D502	407 008 0405	DIODE GMB01-BT	1
D503	407 008 0405	DIODE GMB01-BT	1
D504	407 008 0405	DIODE GMB01-BT	1
D505	407 008 0405	DIODE GMB01-BT	1
D506	407 008 0405	DIODE GMB01-BT	1
D507	407 008 0405	DIODE GMB01-BT	1
D508	407 008 0405	DIODE GMB01-BT	1
D509	407 049 8507	ZENER DIODE GZA2.2X	1
D510	407 049 8507	ZENER DIODE GZA2.2X	1
D511	407 008 0405	DIODE GMB01-BT	1
D512	407 050 6103	ZENER DIODE GZA6.2X	1
D513	407 049 7807	ZENER DIODE GZA18Y	1
D514	407 049 7807	ZENER DIODE GZA18Y	1
D515	407 060 9606	DIODE 11E2	1
or	407 004 9105	DIODE DSF10C-BT	1
D516	407 060 9606	DIODE 11E2	1
or	407 004 9105	DIODE DSF10C-BT	1
D517	407 060 9606	DIODE 11E2	1
or	407 004 9105	DIODE DSF10C-BT	1
D518	407 060 9606	DIODE 11E2	1
or	407 004 9105	DIODE DSF10C-BT	1
D519	407 060 9606	DIODE 11E2	1
or	407 004 9105	DIODE DSF10C-BT	1
D520	407 050 4802	ZENER DIODE GZA5.1Y	1
D521	407 014 2509	DIODE 30DC1S	1
D522	407 014 2400	DIODE 30DC1RS	1
D523	407 060 9606	DIODE 11E2	1
or	407 004 9105	DIODE DSF10C-BT	1
D524	407 049 7708	ZENER DIODE GZA18X	1
D525	407 050 5502	ZENER DIODE GZA5.6Y	1
D526	407 008 0405	DIODE GMB01-BT	1
D527	407 060 9606	DIODE 11E2	1
or	407 004 9105	DIODE DSF10C-BT	1
Q501	405 011 0306	TR 2SC1583-F	1
Q502	405 011 0306	TR 2SC1583-F	1
Q503	405 004 4502	TR 2SA608-F-NP	1
Q504	405 004 4502	TR 2SA608-F-NP	1
Q505	405 013 7600	TR 2SC2291-F	1
Q506	405 013 7600	TR 2SC2291-F	1
Q507	405 002 9103	TR 2SA1209-S	1
Q508	405 002 9103	TR 2SA1209-S	1
Q509	405 016 3906	TR 2SC2911-S	1
Q510	405 016 3906	TR 2SC2911-S	1
Q511	405 017 2502	TR 2SC3117-R	1
Q512	405 017 2502	TR 2SC3117-R	1
Q513	405 003 1502	TR 2SA1249-R	1

Ref. No.	Part No.	Description	Q'ty
Q514	405 003 1502	TR 2SA1249-R	1
Q519	405 019 2708	TR 2SC536-F-NP	1
Q520	405 019 2708	TR 2SC536-F-NP	1
Q521	405 034 6804	TR DTA114-ES	1
or	405 003 7900	TR 2SA1348	1
Q522	405 004 4502	TR 2SA608-F-NP	1
Q523	405 019 2708	TR 2SC536-F-NP	1
Q525	405 022 1101	TR 2SD1266-P	1
Q526	405 007 5100	TR 2SB560-E-MP	1
Q527	405 019 2708	TR 2SC536-F-NP	1
Q528	405 019 2708	TR 2SC536-F-NP	1
Q529	405 016 2206	TR 2SC2878-A	1
Q530	405 016 2206	TR 2SC2878-A	1
Q531	405 019 2708	TR 2SC536-F-NP	1
C501	403 071 6207	CERAMIC 220P K 50V	1
C502	403 071 6207	CERAMIC 220P K 50V	1
C503	403 047 1502	ELECT 4.7U M 25V	1
C504	403 047 1502	ELECT 4.7U M 25V	1
C505	403 009 8105	CERAMIC 100P K 50V	1
C506	403 009 8105	CERAMIC 100P K 50V	1
C507	403 009 8105	CERAMIC 100P K 50V	1
C508	403 009 8105	CERAMIC 100P K 50V	1
C509	403 039 2906	ELECT 47U M 6.3V	1
C510	403 039 2906	ELECT 47U M 6.3V	1
C511	4-2239-71190	Capacitor 27PF 500V	1
C512	4-2239-71190	Capacitor 27PF 500V	1
C513	4-2239-72020	Ceram 3 PF 500V	1
C514	4-2239-72020	Ceram 3 PF 500V	1
C515	403 067 5603	MT-COMPO 0.1U J 50V	1
C516	403 067 5603	MT-COMPO 0.1U J 50V	1
C517	4-2239-71120	Capacitor 18PF 500V	1
C518	4-2239-71120	Capacitor 18PF 500V	1
C519	403 054 9706	ELECT 47U M 100V	1
C520	403 054 9706	ELECT 47U M 100V	1
C521	403 054 9706	ELECT 47U M 100V	1
C522	403 054 9706	ELECT 47U M 100V	1
C523	403 049 1609	ELECT 1U M 50V	1
C524	403 049 1609	ELECT 1U M 50V	1
C527	4-2239-72120	Ceram 220PF 500V K	1
C528	4-2239-72120	Ceram 220PF 500V K	1
C529	4-2239-72120	Ceram 220PF 500V K	1
C530	4-2239-72120	Ceram 220PF 500V K	1
C531	403 061 4404	POLYESTER 0.039U K 50V	1
C532	403 061 4404	POLYESTER 0.039U K 50V	1
C533	403 039 2906	ELECT 47U M 6.3V	1
C534	403 044 8207	ELECT 10U M 25V	1
C535	403 051 3905	ELECT 47U M 50V	1
C536	403 042 0302	ELECT 10U M 16V	1
C537	403 041 3304	ELECT 47U M 10V	1
C538	403 039 4504	ELECT 470U M 6.3V	1
C539	403 043 7102	ELECT 330U M 16V	1
C540	403 069 8404	CERAMIC 0.01U Z 50V	1
C541	403 044 8207	ELECT 10U M 25V	1
C542	403 044 8207	ELECT 10U M 25V	1
C543	403 044 8207	ELECT 10U M 25V	1
C544	403 044 8207	ELECT 10U M 25V	1
C545	403 045 0507	ELECT 100U M 25V	1
C546	403 045 0507	ELECT 100U M 25V	1
C547	403 052 9500	ELECT 1000U M 35V	1
C548	403 052 9500	ELECT 1000U M 35V	1
C549	404 012 7000	CERAMIC 0.01U P 500V	1
C550	404 012 7000	CERAMIC 0.01U P 500V	1
C551	404 012 7000	CERAMIC 0.01U P 500V	1
C552	404 012 7000	CERAMIC 0.01U P 500V	1
C553	404 012 7000	CERAMIC 0.01U P 500V	1
C554	404 012 7000	CERAMIC 0.01U P 500V	1

www.hifiengine.com

P.C.BOARD PARTS LIST (Continued)

Ref. No.	Part No.	Description	Q'ty
C555	404 012 7000	CERAMIC 0.01U P 500V	1
C556	404 012 7000	CERAMIC 0.01U P 500V	1
C557	4-2239-72340	Capacitor 0.01MF250V	1
C558	403 043 4903	ELECT 33U M 16V	1
C559	4-2239-72430	Elect 8200MF 75V	1
C560	4-2239-72430	Elect 8200MF 75V	1
C561	403 054 1304	ELECT 47U M 35V	1
C562	403 049 1609	ELECT 1U M 50V	1
C567	403 067 5603	MT-COMPO 0.1U J 50V	1
C568	403 067 5603	MT-COMPO 0.1U J 50V	1
R501	401 024 7004	CARBON 1K JA 1/6W	1
R502	401 024 7004	CARBON 1K JA 1/6W	1
R503	401 024 7707	CARBON 100K JA 1/6W	1
R504	401 024 7707	CARBON 100K JA 1/6W	1
R505	401 027 2600	CARBON 5.6K JA 1/6W	1
R506	401 027 2600	CARBON 5.6K JA 1/6W	1
R507	401 027 5908	CARBON 68K JA 1/6W	1
R508	401 027 5908	CARBON 68K JA 1/6W	1
R509	401 025 4200	CARBON 1.8K JA 1/6W	1
R510	401 025 4200	CARBON 1.8K JA 1/6W	1
R511	401 027 8602	CARBON 8.2K JA 1/6W	1
R512	401 027 8602	CARBON 8.2K JA 1/6W	1
R513	401 027 2105	CARBON 56 JA 1/6W	1
R514	401 027 2105	CARBON 56 JA 1/6W	1
R515	401 026 7408	CARBON 39K JA 1/6W	1
R516	401 026 7408	CARBON 39K JA 1/6W	1
R517	401 027 8602	CARBON 8.2K JA 1/6W	1
R518	401 027 8602	CARBON 8.2K JA 1/6W	1
R519	401 027 2105	CARBON 56 JA 1/6W	1
R520	401 027 2105	CARBON 56 JA 1/6W	1
R521	401 026 4605	CARBON 33K JA 1/6W	1
R522	401 026 4605	CARBON 33K JA 1/6W	1
R523	402 015 5603	FUSIBLE RES 82 J- 1/4W	1
R524	402 015 5603	FUSIBLE RES 82 J- 1/4W	1
R525	402 015 5603	FUSIBLE RES 82 J- 1/4W	1
R526	402 015 5603	FUSIBLE RES 82 J- 1/4W	1
R527	402 015 3005	FUSIBLE RES 10 J- 1/4W	1
R528	402 015 3005	FUSIBLE RES 10 J- 1/4W	1
R529	402 015 3005	FUSIBLE RES 10 J- 1/4W	1
R530	402 015 3005	FUSIBLE RES 10 J- 1/4W	1
R531	402 015 4705	FUSIBLE RES 47 J- 1/4W	1
R532	402 015 4705	FUSIBLE RES 47 J- 1/4W	1
R533	402 015 4705	FUSIBLE RES 47 J- 1/4W	1
R534	402 015 4705	FUSIBLE RES 47 J- 1/4W	1
R535	402 015 3708	FUSIBLE RES 2.2 J- 1/4W	1
R536	402 015 3708	FUSIBLE RES 2.2 J- 1/4W	1
R537	402 015 3708	FUSIBLE RES 2.2 J- 1/4W	1
R538	402 015 3708	FUSIBLE RES 2.2 J- 1/4W	1
R539	401 027 5908	CARBON 68K JA 1/6W	1
R540	401 027 5908	CARBON 68K JA 1/6W	1
R541	402 016 5107	FUSIBLE RES 330 J- 1/2W	1
R542	402 016 5107	FUSIBLE RES 330 J- 1/2W	1
R543	4-2219-70370	Cement 0.22X2 5W	1
R544	4-2219-70370	Cement 0.22X2 5W	1
R545	401 019 6203	CARBON 4.7 JA 1/4W	1
R546	401 019 6203	CARBON 4.7 JA 1/4W	1
R547	401 058 1207	OXIDE-MT 10 JB 1W	1
R548	401 058 1207	OXIDE-MT 10 JB 1W	1
R549	401 024 7707	CARBON 100K JA 1/6W	1
R550	401 024 7707	CARBON 100K JA 1/6W	1
R551	401 025 4606	CARBON 18K JA 1/6W	1
R553	401 024 7400	CARBON 10K JA 1/6W	1
R554	401 020 2904	CARBON 47K JA 1/4W	1
R557	401 015 2704	CARBON 1.8K JA 1/4W	1
R558	401 017 0807	CARBON 270 JA 1/4W	1
R559	401 018 2800	CARBON 330 JA 1/4W	1
R560	401 018 2800	CARBON 330 JA 1/4W	1
R561	401 012 5708	CARBON 1K JA 1/4W	1
R562	401 012 5708	CARBON 1K JA 1/4W	1
R563	402 015 3401	FUSIBLE RES 120 J- 1/4W	1
R564	401 025 8703	CARBON 220K JA 1/6W	1
R565	401 016 4806	CARBON 22K JA 1/4W	1
R566	401 024 7400	CARBON 10K JA 1/6W	1
R567	401 062 2405	OXIDE-MT 4.7K JB 1W	1
R587	401 062 5208	OXIDE-MT 56 JB 1W	1
R590	401 056 7409	OXIDE-MT 68 JB 1/2W	1

POWER SW. P.C.B. ASSY

51	141-0-1939-20410	Power SW. P.C.B. Assy	1
	4-2439-73063	Wire 6 Parallel	1
	4-2352-00970	Headphone Jack 3P (Headphones)	1
	4-2372-00830	EC Terminal 1P	2
	111-2-6220-11100	Wire Wrap Terminal	3
	131-2-6114-00200	Cover Safety (for C701)	1
S701	⚠ 4-2312-05710	Switch Push Power (Power)	1
S702	4-2319-77341	Switch Push 1Key (Speaker A)	1
S703	4-2319-77341	Switch Push 1Key (Speaker B)	1
C701	⚠ 4-2239-72340	Capacitor 0.01MF250V	1
R701	401 069 3009	OXIDE-MT 680 JA 2W	1
R702	401 069 3009	OXIDE-MT 680 JA 2W	1
R703	401 017 0807	CARBON 270 JA 1/4W	1
R704	401 017 0807	CARBON 270 JA 1/4W	1
R705	401 017 0807	CARBON 270 JA 1/4W	1
R706	401 017 0807	CARBON 270 JA 1/4W	1

SPEAKER TERMINAL P.C.B. ASSY

52	141-0-1939-20420	Speaker Terminal P.C.B. Assy	1
	4-2372-01160	Speaker 8P Terminal (Speaker)	1
	4-2439-73065	Wire 2 Parallel	1

AC SUPPLY P.C.B. ASSY

53	141-0-1939-20430	AC Supply P.C.B. Assy	1
	4-2359-23000	Fuse Holder	4
	⚠ 4-2359-79090	Socket 2P-2 (Power Supply)	1
	111-2-6220-11100	Wire Wrap Terminal	6
F701	⚠ 4-2342-00010	Fuse 1.0A	1
F702	⚠ 4-2342-00010	Fuse 1.0A	1
R708	402 024 9104	CARBON 2.2M J- 1/2W	1
R709	401 095 1307	OXIDE-MT 5.6 JB 1W	1

AC OUTLET P.C.B. ASSY

54	141-0-1939-20440	AC Outlet P.C.B. Assy	1
R707	402 023 3905	CARBON 3.9M JA 1/2W	1

BIAS P.C.B. ASSY

55	141-0-1939-20450	Bias P.C.B. Assy	2
D601	407 008 0405	DIODE GMB01-BT	1
Q601	405 026 0803	TR 2SD947	1

TRANSISTOR P.C.B. ASSY

56	141-0-1939-22260	Transistor (5V) P.C.B. Assy	1
Q524	405 022 1101	TR 2SD1266-P	1

www.hifiengine.com

P.C.BOARD PARTS LIST (Continued)

Ref. No.	Part No.	Description	Q'ty
	VOLUME P.C.B. ASSY		
57	141-0-1939-23060	Volume P.C.B. Assy	1
CN302	4-2369-73150	Plug 5P	1
CN303	4-2369-75880	Plug 6P L	1
IC303	409 053 1901	IC TC9177P	1
IC304	409 057 4601	IC UPC4570HA	1
C331	403 071 2001	CERAMIC 180P K 50V	1
C332	403 071 2001	CERAMIC 180P K 50V	1
C333	403 117 7700	POLYESTER 0.033U K 50V	1
C334	403 117 7700	POLYESTER 0.033U K 50V	1
C335	403 047 1502	ELECT 4.7U M 25V	1
C336	403 047 1502	ELECT 4.7U M 25V	1
C337	403 072 8200	CERAMIC 330P K 50V	1
C338	403 072 8200	CERAMIC 330P K 50V	1
C339	403 047 1502	ELECT 4.7U M 25V	1
C340	403 047 1502	ELECT 4.7U M 25V	1
C341	403 044 8207	ELECT 10U M 25V	1
C342	403 044 8207	ELECT 10U M 25V	1
C343	403 073 3204	CERAMIC 390P K 50V	1
C344	403 072 2703	CERAMIC 0.022U Z 50V	1
C345	403 072 2703	CERAMIC 0.022U Z 50V	1
C347	403 026 5408	CERAMIC 47P K 50V	1
C348	403 026 5408	CERAMIC 47P K 50V	1
R351	401 027 3003	CARBON 56K JA 1/6W	1
R352	401 027 3003	CARBON 56K JA 1/6W	1
R353	401 025 8703	CARBON 220K JA 1/6W	1
R354	401 025 8703	CARBON 220K JA 1/6W	1
R355	401 025 8703	CARBON 220K JA 1/6W	1
R356	401 025 8703	CARBON 220K JA 1/6W	1
R357	401 024 7004	CARBON 1K JA 1/6W	1
R358	401 024 7004	CARBON 1K JA 1/6W	1
R359	401 027 2600	CARBON 5.6K JA 1/6W	1
R360	401 027 2600	CARBON 5.6K JA 1/6W	1
R361	401 025 7409	CARBON 220 JA 1/6W	1
R362	401 025 7409	CARBON 220 JA 1/6W	1

NOTES:

1. Parts order must contain Model Number, Part Number and Description.
2. Ordering quantity of screws and resistors must be multiple of 10 pcs.

www.hifiengine.com

INTEGRATED CIRCUIT BLOCK DIAGRAM

PHONO EQ. AMP IC NJM 2068 DD / GRAPHIC EQ. AMP IC μPC 4570 HA

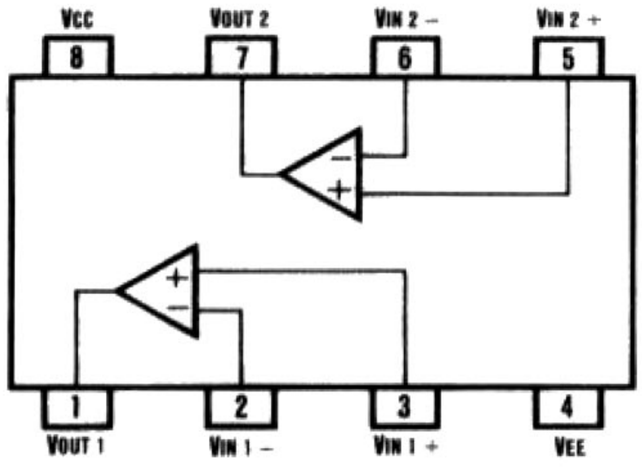

REMOTE CONTROL PRE AMP IC μPC 1490 HA

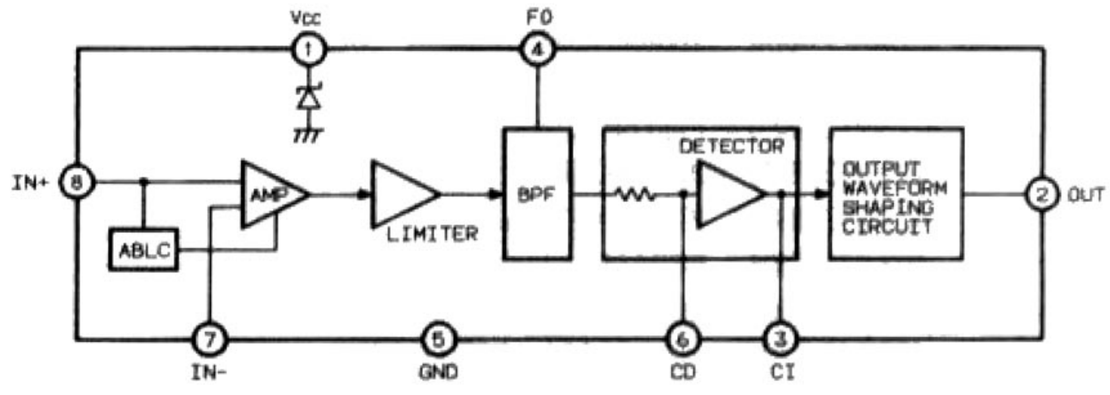

FUNCTION ANALOG SWITCH IC TC 9163 N

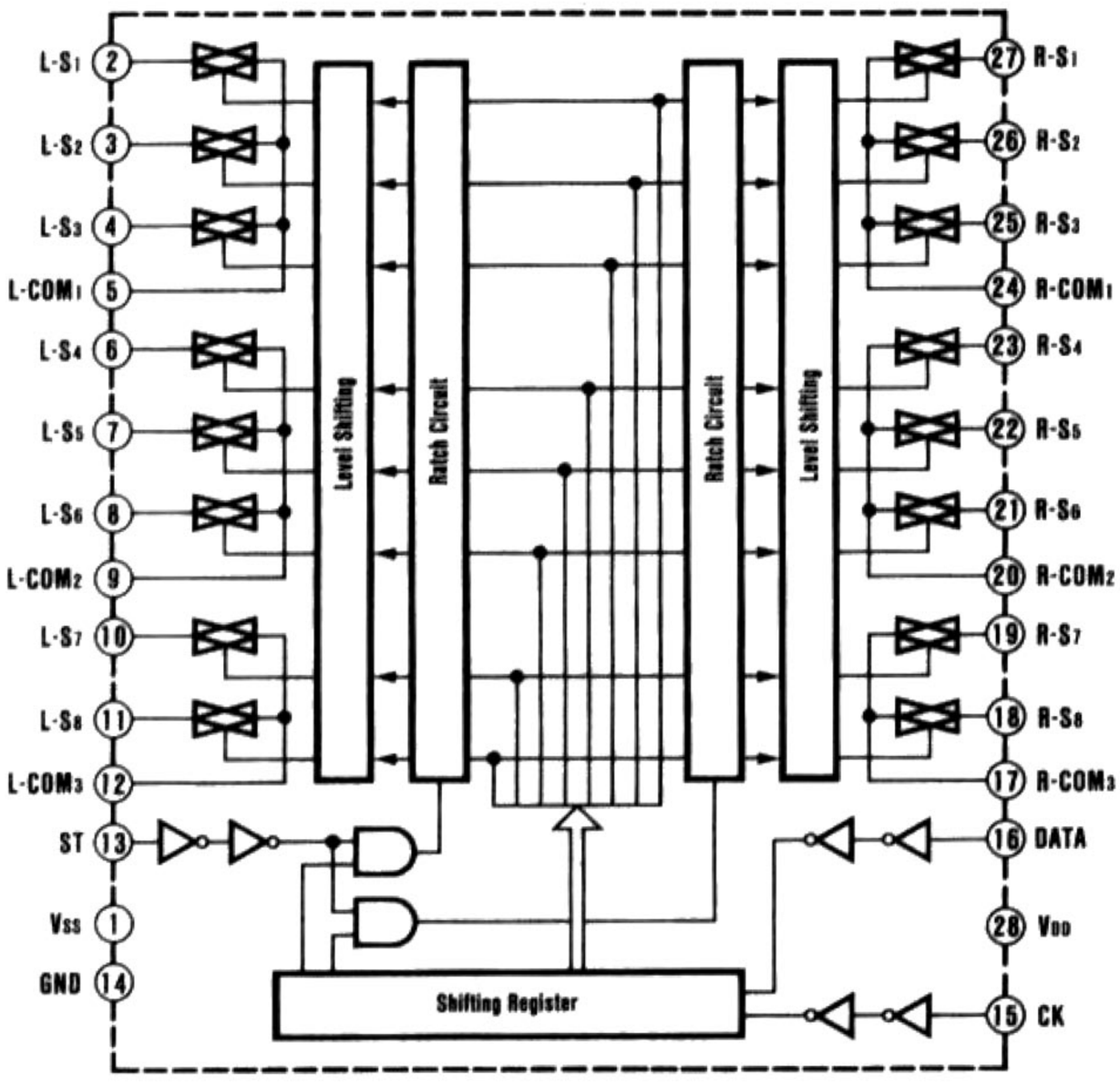

BAND PASS FILTER IC LA 6458 SS

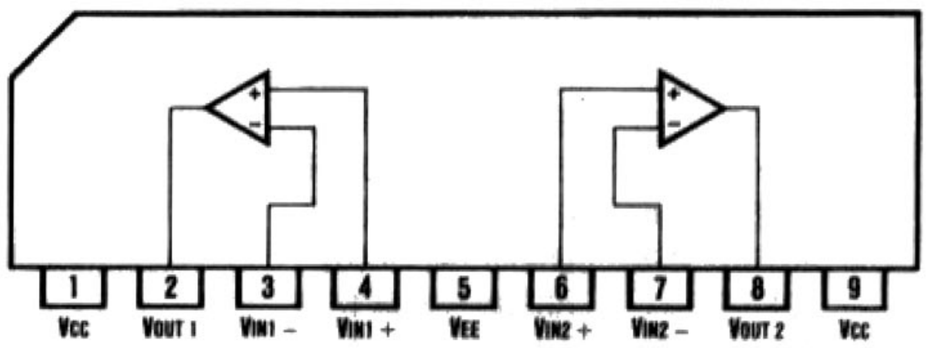

LCD DISPLAY DRIVER IC LC 7561

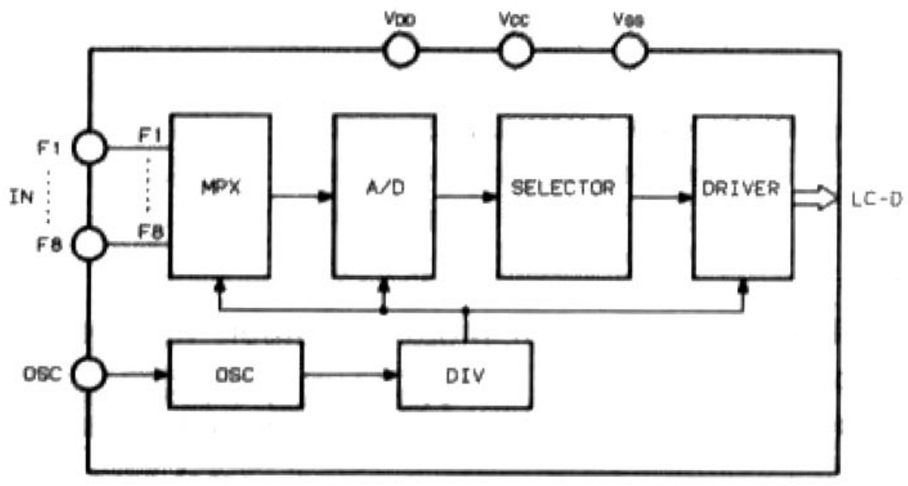

REMOTE CONTROL RECEIVER IC TMP 47C460AN-1

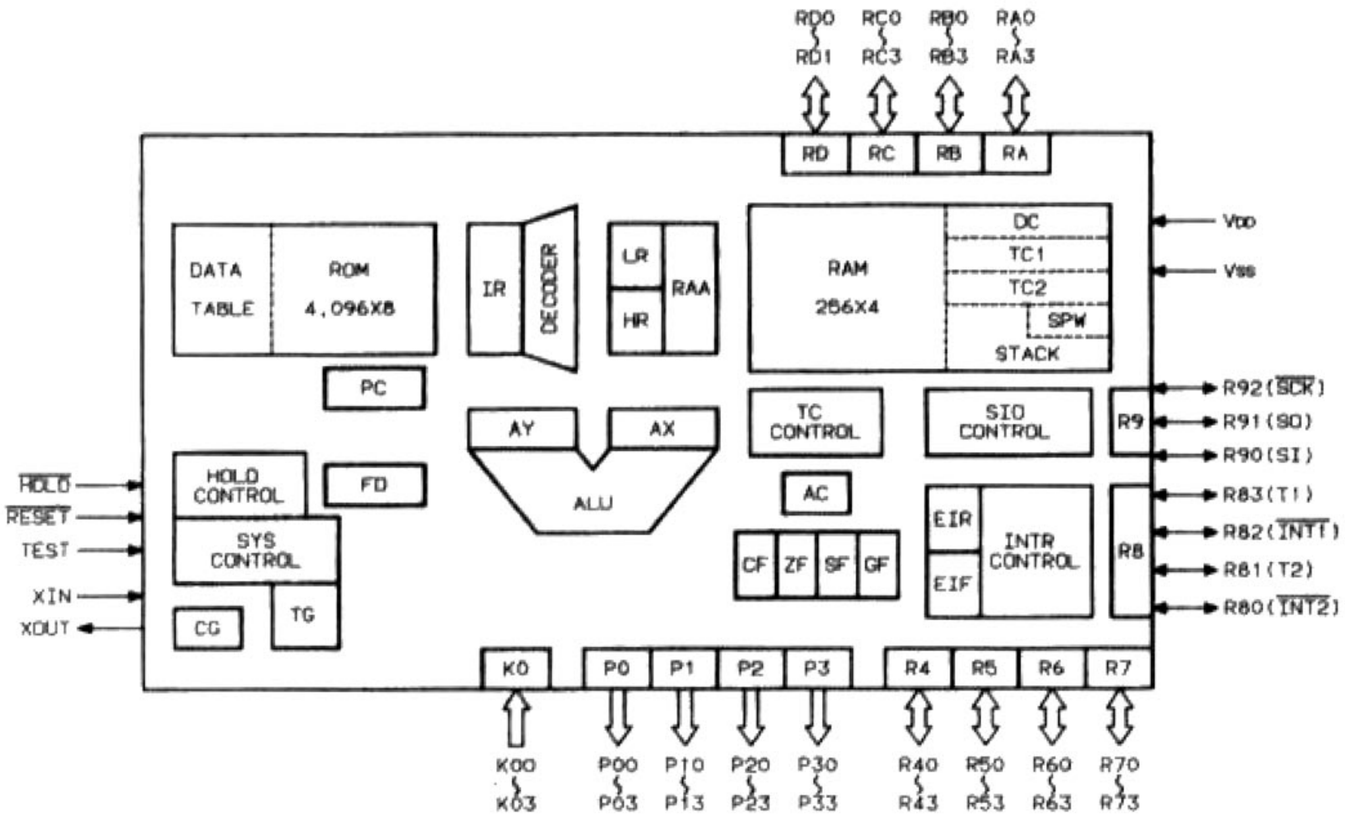

GRAPHIC EQ. AMP IC M 5227 P

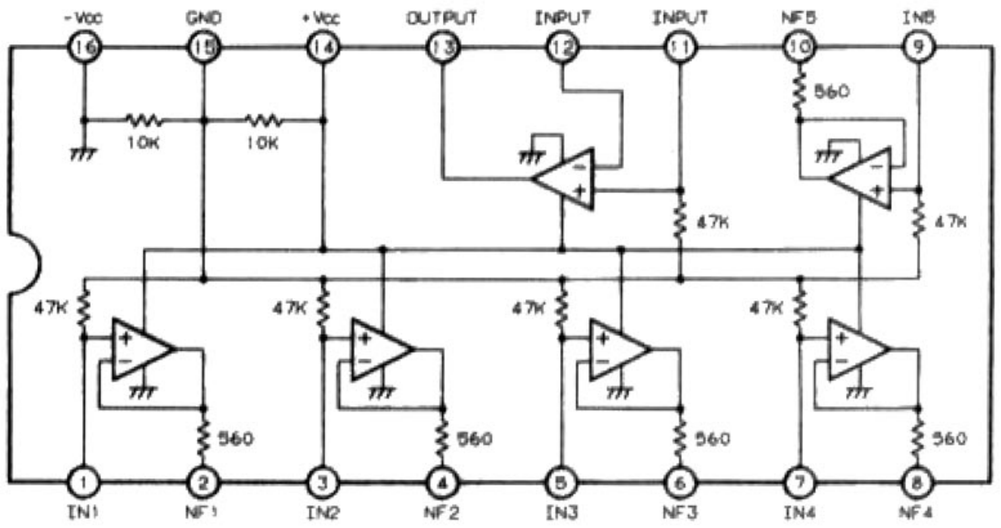

www.hifiengine.com

INTEGRATED CIRCUIT BLOCK DIAGRAM(Continued)

ELECTRONIC VOLUME (with Loudness) IC TC 9177P

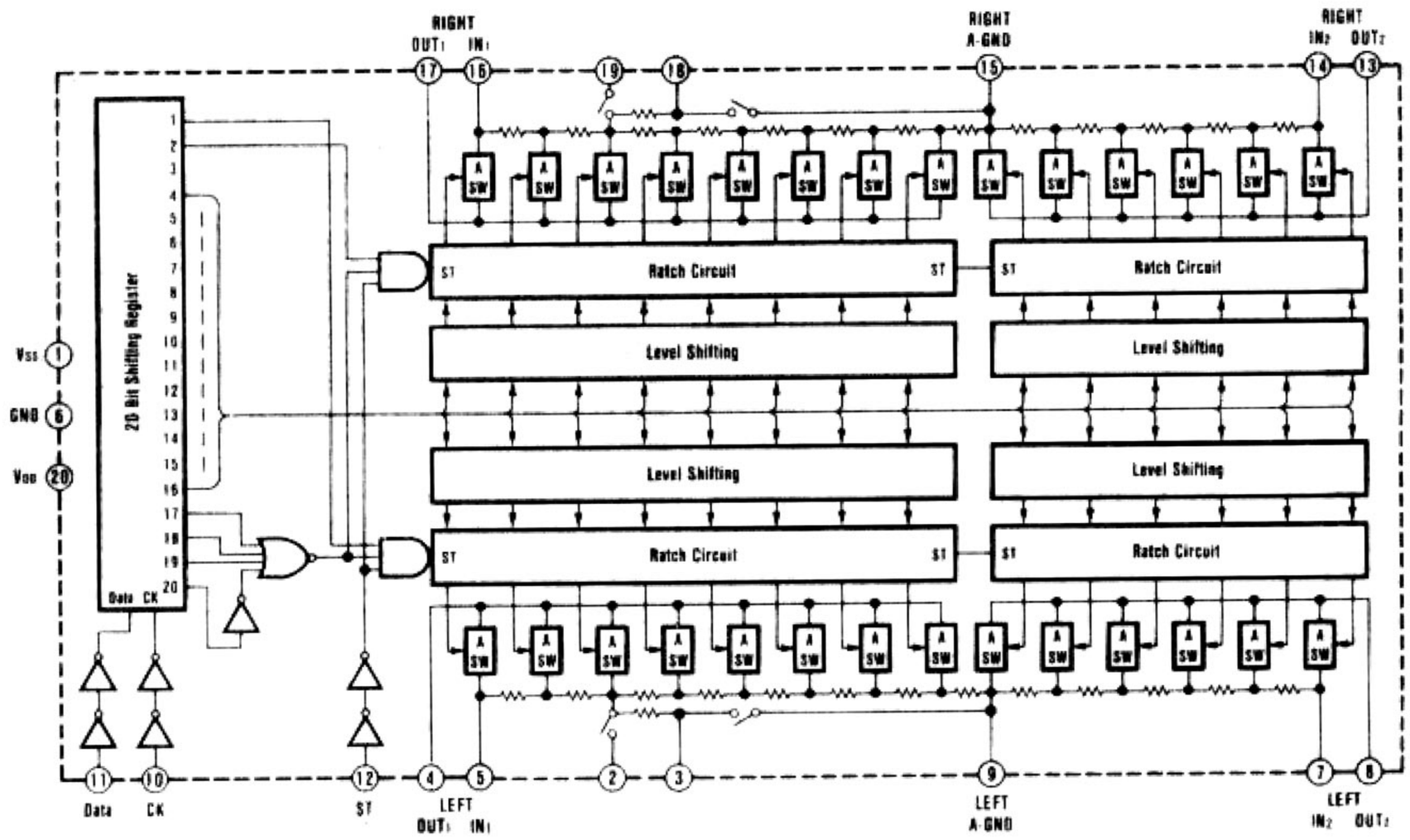

SCHEMATIC DIAGRAM (REMOTE CONTROL)

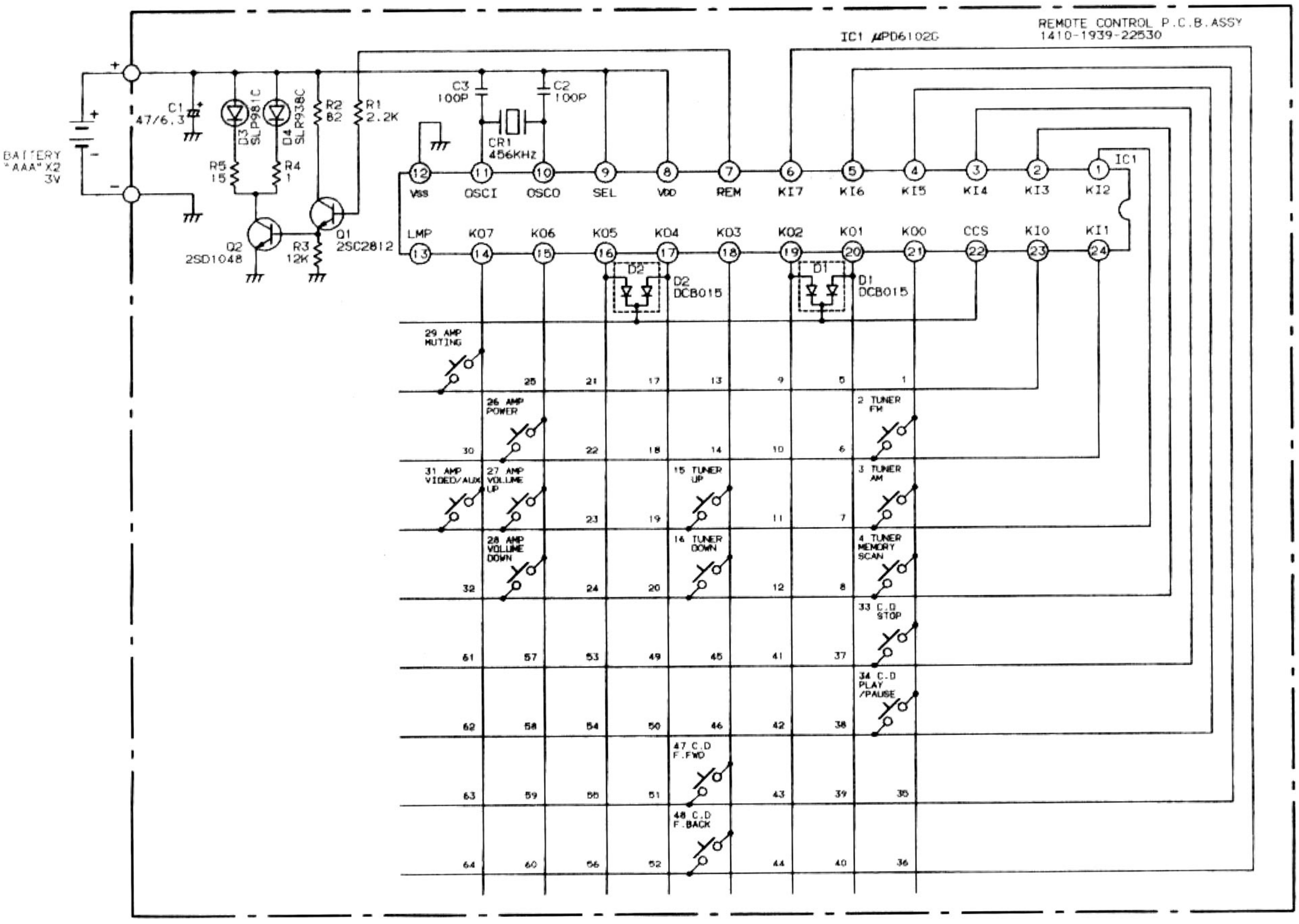

PARTS LIST & EXPLODED VIEW (REMOTE CONTROL)

Ref. No.	Part No.	Description	Q'ty
	REMOTE CONTROL CABINET		
	4-1929-70260	REM-862 (Remote Control)	1
	131-6-2119-02580	Bag Polyethylene-Exp.	1
1	131-2-1101-53100	Cabinet Top	1
2	131-2-1101-53200	Cabinet Bottom	1
3	131-2-1107-27700	Lid Battery	1
4	131-2-1110-42902	Plate Decorate	1
5	131-2-6308-26600	Filter	1
6	141-2-1659-94201	Knob Rubber (10Key)	1
7	141-2-1659-94300	Knob Rubber (4Key)	1
8	141-2-3829-49500	Spring Battery	1
9	141-0-1939-22530	Remote Control P.C.B. Assy	1
	REMOTE CONTROL P.C.B. ASSY		
9	141-0-1939-22530	Remote Control P.C.B. Assy	1
	141-2-3829-49600	Terminal Anode (+)	1
	141-2-3829-49601	Terminal Anode (−)	1
CR1	4-2279-70101	Ceramic OSC 456kHz	1
D1	407 004 0706	DIODE DCB015-TA	1
D2	407 004 0706	DIODE DCB015-TA	1
D3	407 036 6301	LED SLP-981C-50	1
D4	407 040 4003	LED SLR-938C	1
IC1	409 060 1604	IC UPD6102G	1
Q1	405 015 8704	TR 2SC2812-L6-TA	1
Q2	405 021 2505	TR 2SD1048-X8-TA	1
C1	403 039 2906	ELECT 47U M 6.3V	1
C2	403 068 9709	CERAMIC 100P K 50V	1
C3	403 068 9709	CERAMIC 100P K 50V	1
R1	402 024 1207	MT-GLAZE 2.2K JA 1/8W	1
R2	402 033 8402	MT-GLAZE 82 JA 1/8W	1
R3	402 033 8501	MT-GLAZE 12K JA 1/8W	1
R4	402 033 8303	MT-GLAZE 1 JA 1/8W	1
R5	402 022 9106	MT-GLAZE 15 JA 1/8W	1

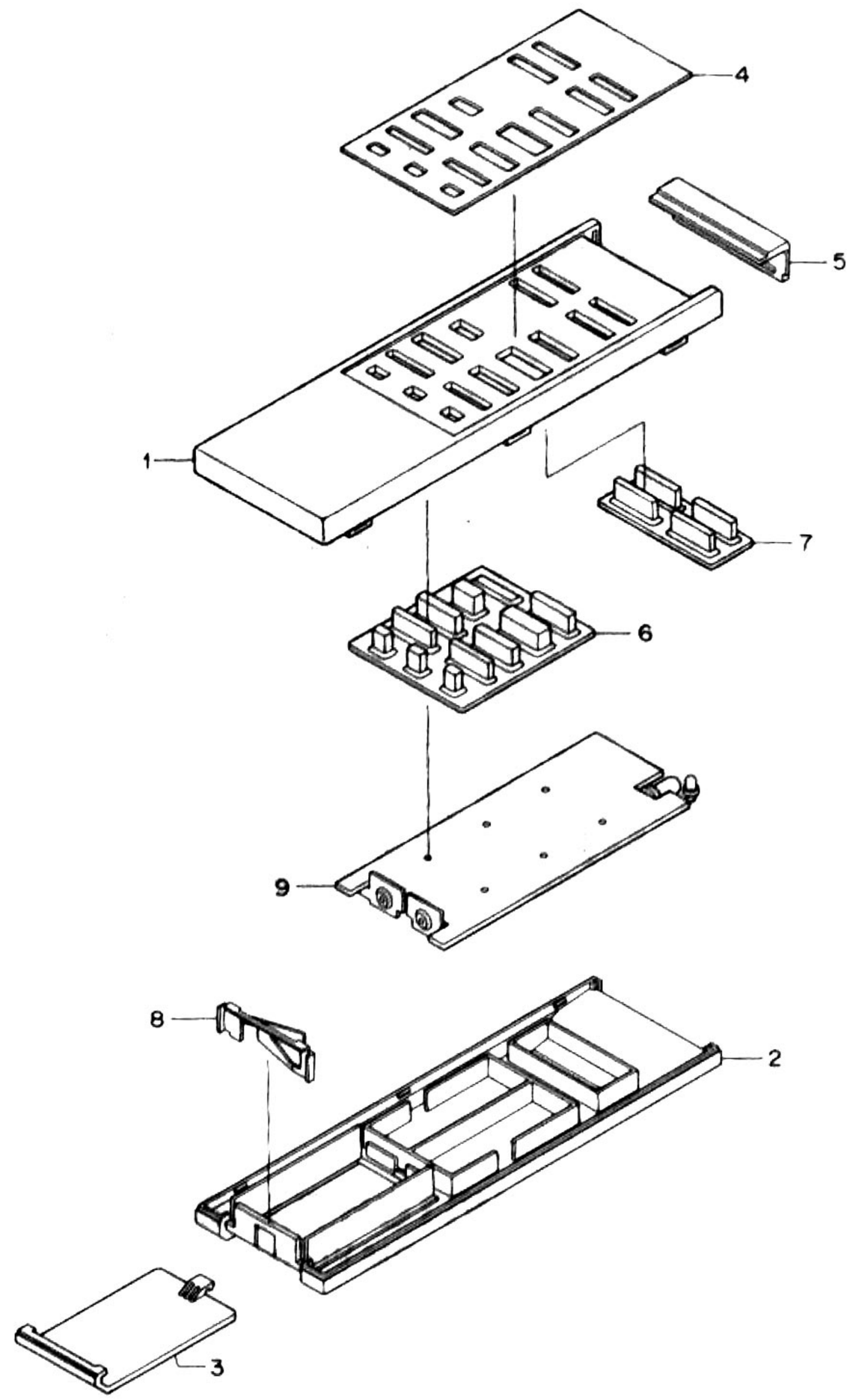

NOTES:

1. Parts order must contain Model Number, Part Number and Description.
2. Ordering quantity of screws and resistors must be multiple of 10 pcs.

INTEGRATED CIRCUIT BLOCK DIAGRAM

REMOTE CONTROL TRANSMITTER IC μPD 6102 G

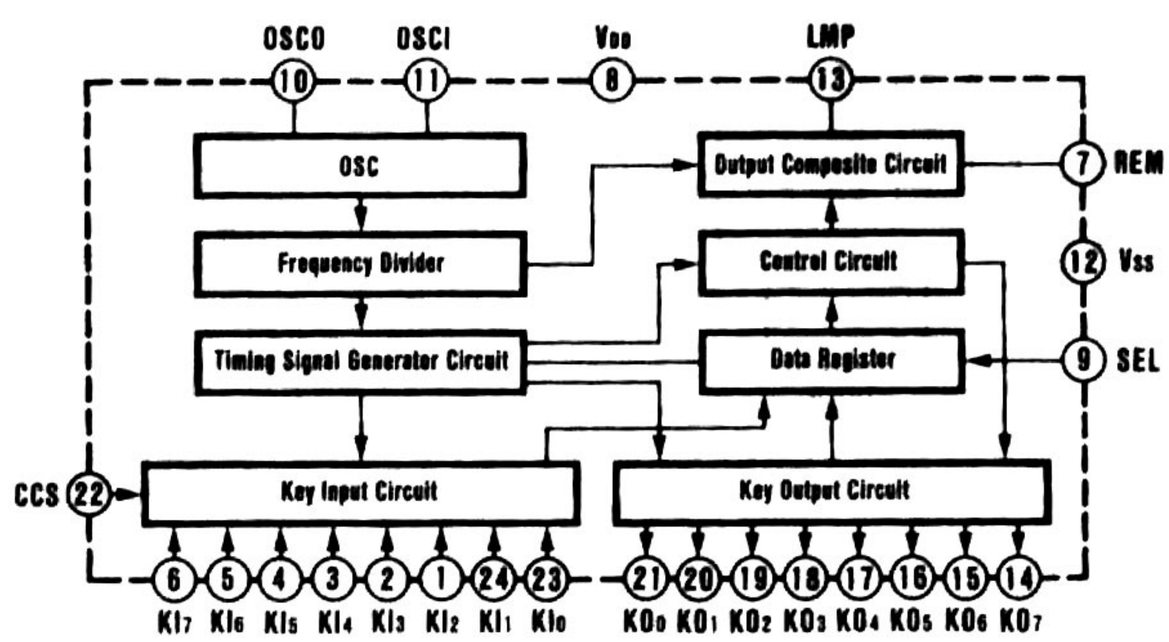

www.hifiengine.com

GRAPHIC EQ. P.C.BOARD
(BOTTOM VIEW)

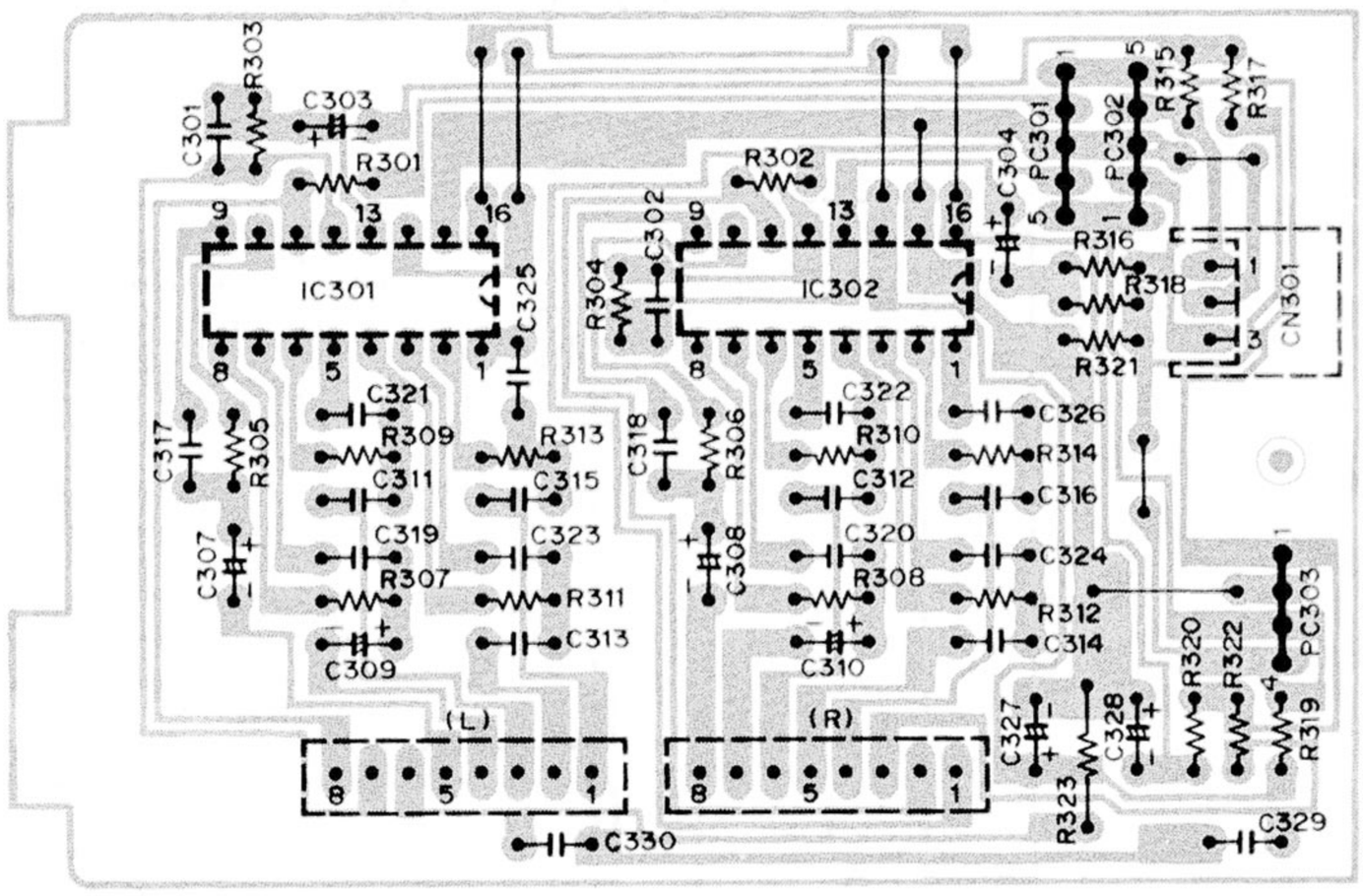

DISPLAY P.C.BOARD
(BOTTOM VIEW)

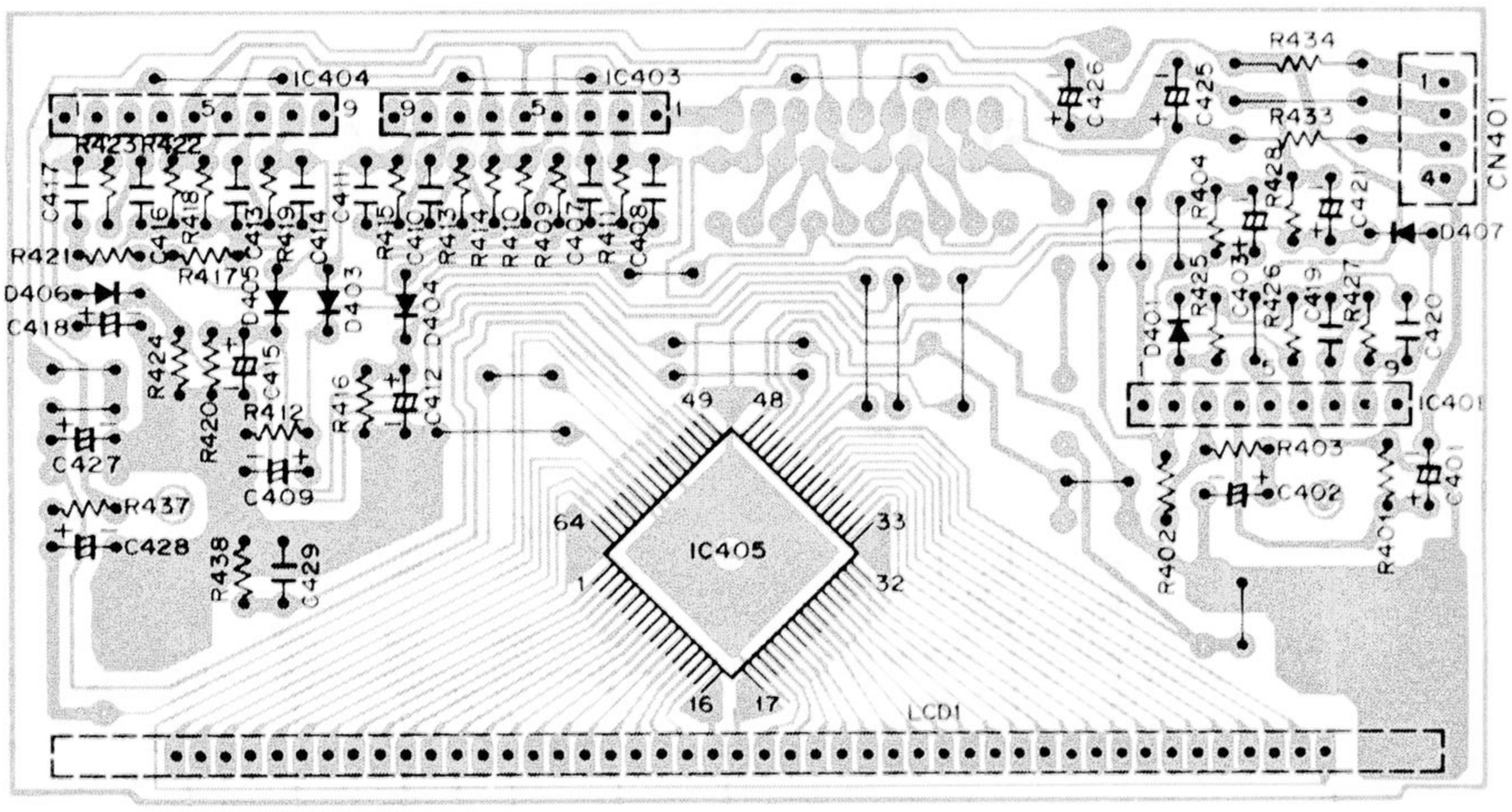

VOLUME P.C.BOARD
(BOTTOM VIEW)

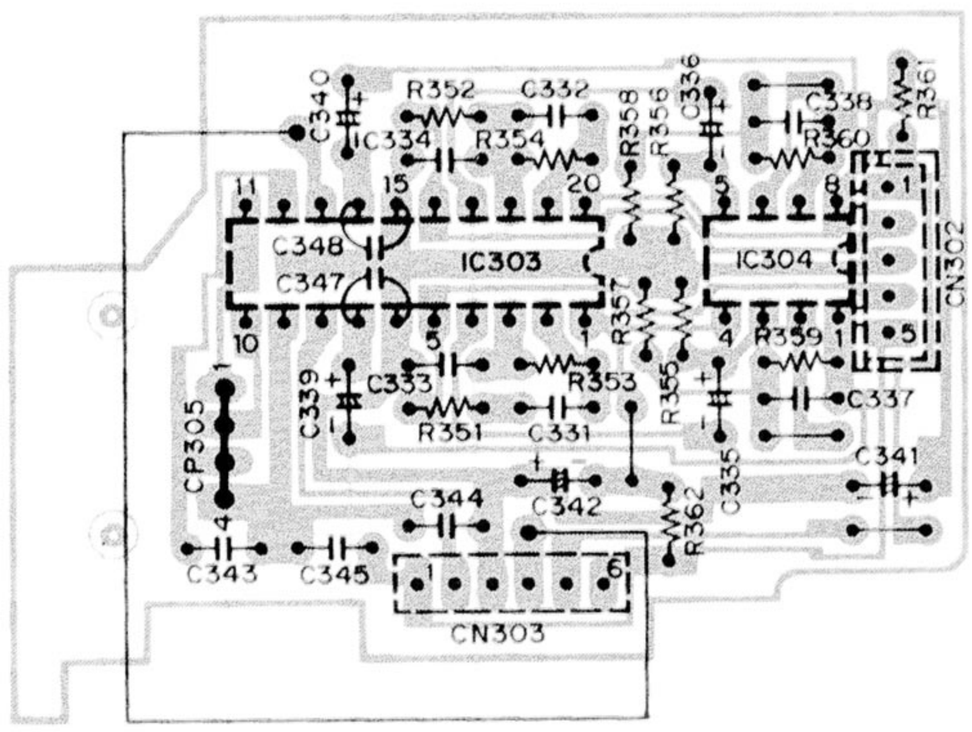

MAIN AMPLIFIER PRINTED CIRCUIT BOARD
(BOTTOM VIEW)

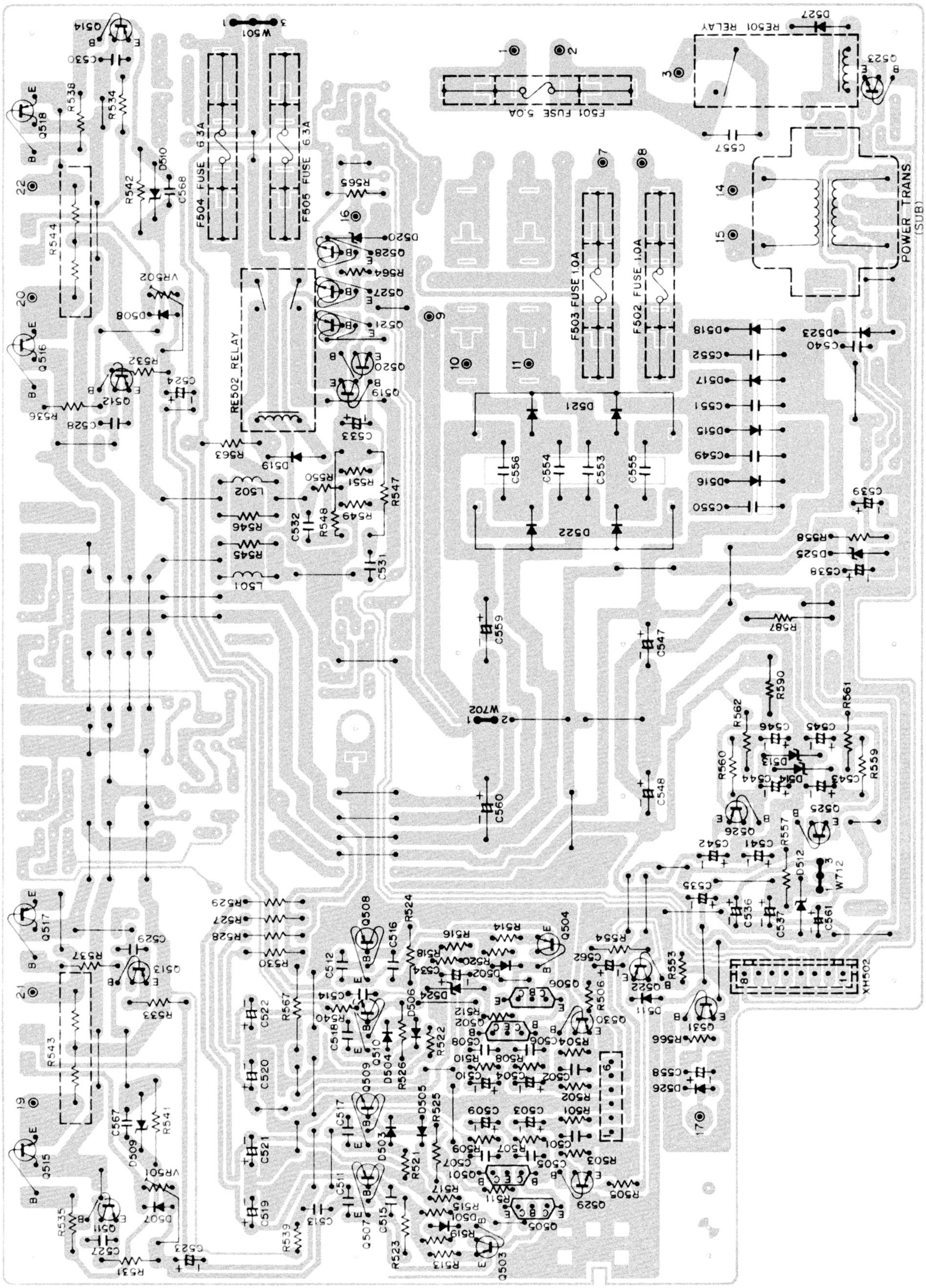

POINT TO POINT WIRING DIAGRAM

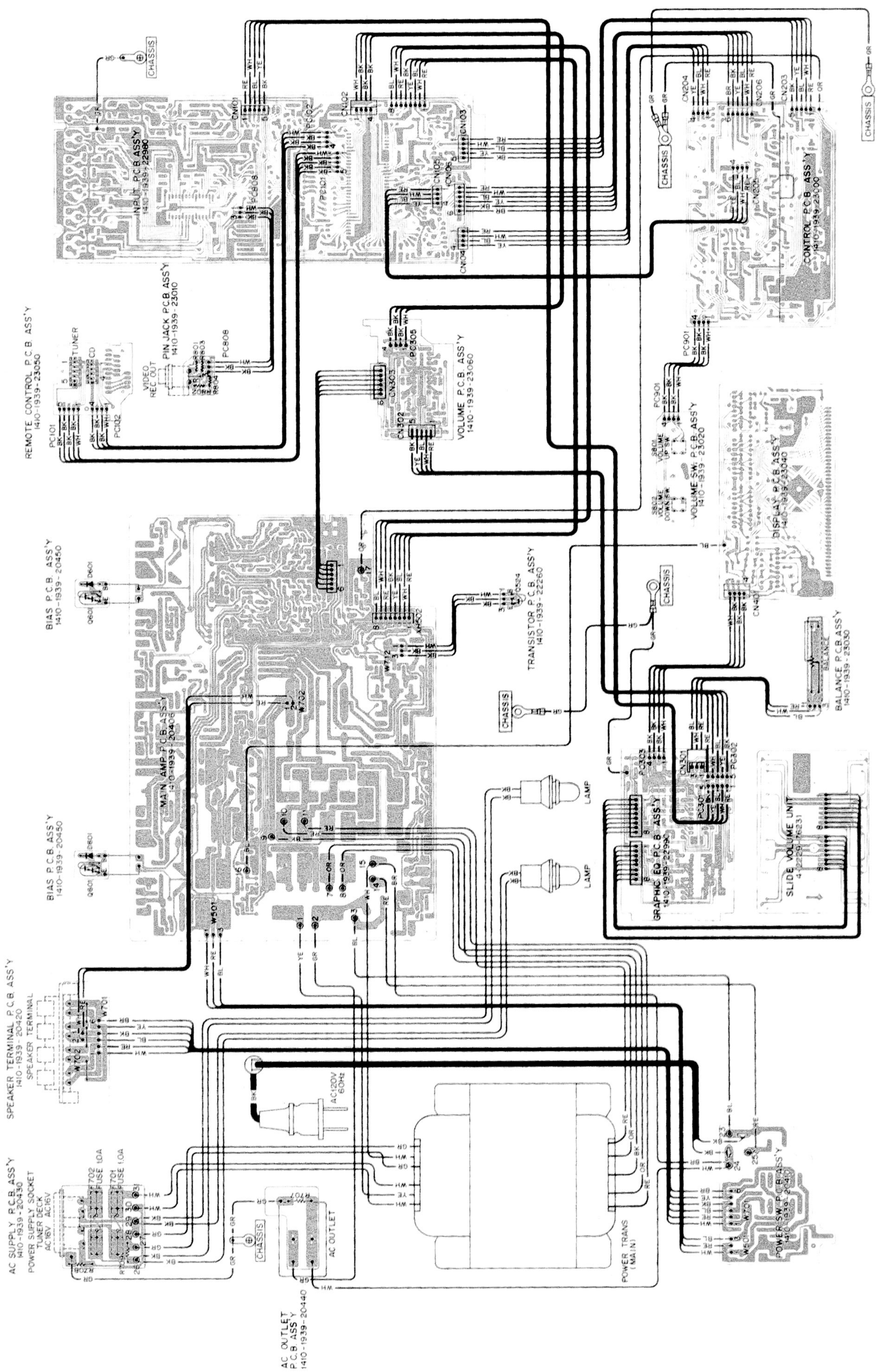

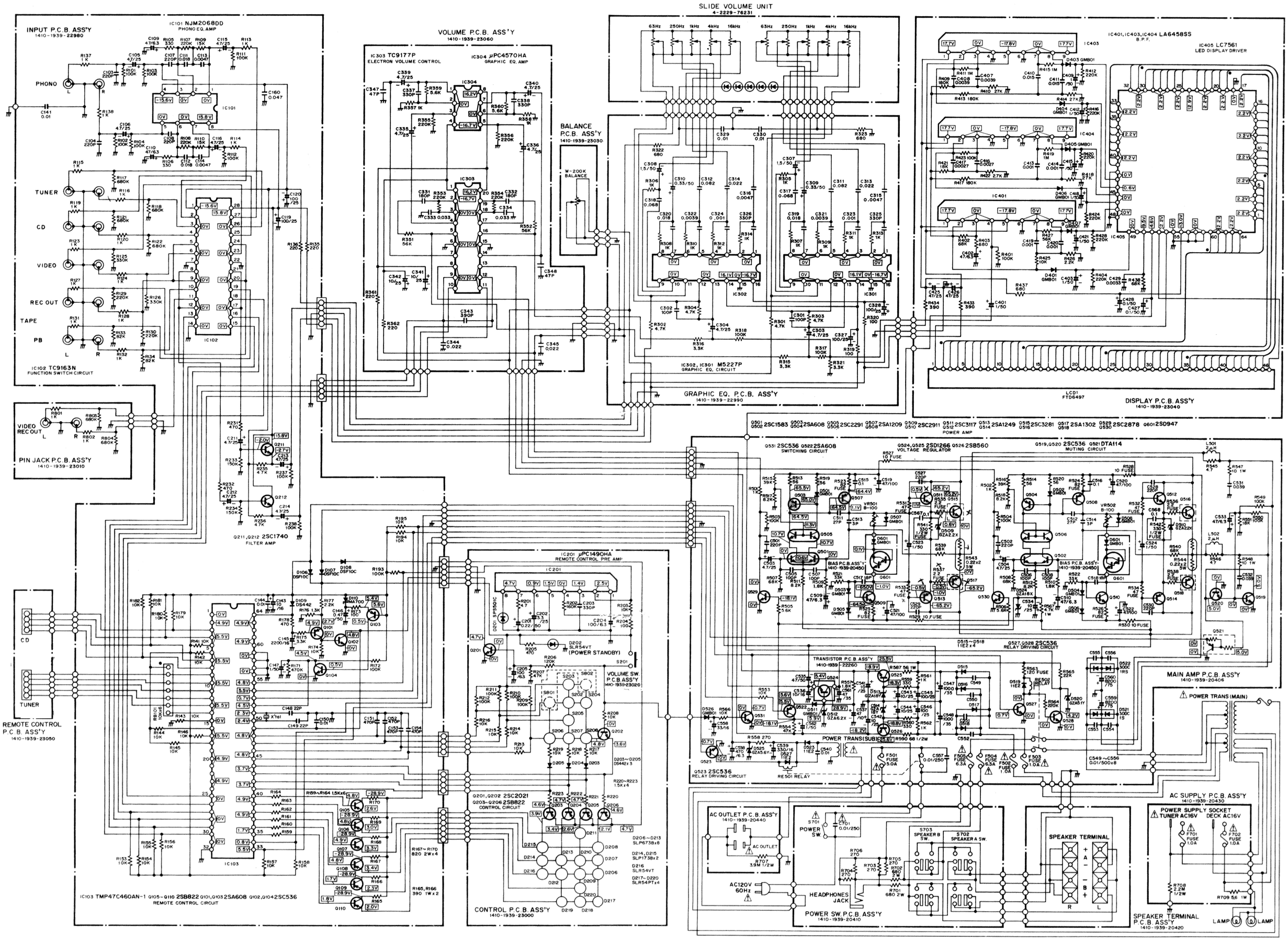
INPUT P.C.B. ASS'Y
1410-1939-22980
IC101 NJM2068DD
PHONO EQ. AMP
PHONO
TUNER
CD
VIDEO
REC OUT
TAPE
PB
IC102 TC9163N
FUNCTION SWITCH CIRCUIT
VIDEO REC OUT
PIN JACK P.C.B. ASS'Y
1410-1939-23010
Q211,Q212 2SC1740
FILTER AMP
REMOTE CONTROL P.C.B. ASS'Y
1410-1939-23050
IC103 TMP47C460AN-1 Q105~Q110 2SB822 Q101,Q103 2SA608 Q102,Q104 2SC536
REMOTE CONTROL CIRCUIT
VOLUME P.C.B. ASS'Y
1410-1939-23060
IC303 TC9177P
ELECTRON VOLUME CONTROL
IC304 μPC4570HA
GRAPHIC EQ. AMP
BALANCE P.C.B. ASS'Y
1410-1939-23030
W-200K BALANCE
SLIDE VOLUME UNIT
4-2229-762.31
63Hz 250Hz 1kHz 4kHz 16kHz
IC302, IC301 M5227P
GRAPHIC EQ. CIRCUIT
GRAPHIC EQ. P.C.B. ASS'Y
1410-1939-22990
IC401, IC403, IC404 LA6458SS
B.P.F.
IC405 LC7561
LED DISPLAY DRIVER
LCD1 FTD6497
DISPLAY P.C.B. ASS'Y
1410-1939-23040
Q501 2SC1583 Q503 2SA608 Q505 2SC2291 Q507 2SA1209 Q509 2SC2911 Q511 2SC3117 Q513 2SA1249 Q515 2SC3281 Q517 2SA1302 Q529 2SC2878 Q601 2SD947
POWER AMP
Q531 2SC536 Q522 2SA608
SWITCHING CIRCUIT
Q524,Q525 2SD1266 Q526 2SB560
VOLTAGE REGULATOR
Q519,Q520 2SC536 Q521 DTA114
MUTING CIRCUIT
BIAS P.C.B. ASS'Y
1410-1939-20450
TRANSISTOR P.C.B. ASS'Y
1410-1939-22260
Q515~Q518 11E2 x 4
Q527,Q528 2SC536
RELAY DRIVING CIRCUIT
Q523 2SC536
RELAY DRIVING CIRCUIT
POWER TRANS(SUB)
RE501 RELAY
MAIN AMP P.C.B. ASS'Y
1410-1939-20406
POWER TRANS (MAIN)
IC201 μPC1490HA
REMOTE CONTROL PRE AMP
D202 SLR54VT (POWER STANDBY)
VOLUME SW. P.C.B. ASS'Y
1410-1939-23020
Q201,Q202 2SC2021
Q203~Q206 2SB822
CONTROL CIRCUIT
CONTROL P.C.B. ASS'Y
1410-1939-23000
AC OUTLET P.C.B. ASS'Y
1410-1939-20440
AC OUTLET
AC120V 60Hz
POWER SW.
HEADPHONES JACK
POWER SW. P.C.B. ASS'Y
1410-1939-20410
S703 SPEAKER B SW.
S702 SPEAKER A SW.
SPEAKER TERMINAL
AC SUPPLY P.C.B. ASS'Y
1410-1939-20430
POWER SUPPLY SOCKET
TUNER AC16V
DECK AC16V
SPEAKER TERMINAL P.C.B. ASS'Y
1410-1939-20420
LAMP
LAMP

SEMICONDUCTOR LEAD IDENTIFICATION

TRANSISTOR	FRONT VIEW	BOTTOM VIEW	TRANSISTOR	FRONT VIEW	BOTTOM VIEW
2SA 608 2SB 560 2SC 536 2SC 1740 2SC 2021 2SC 2878	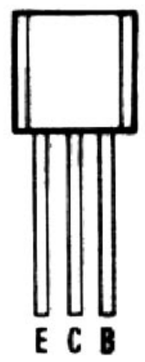	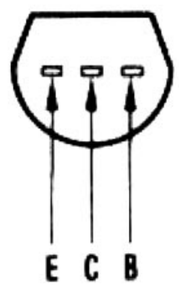	2SA 1302 2SC 3281	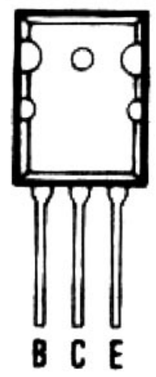	
2SD 1266	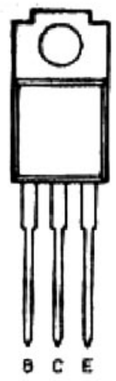		2SC 2291	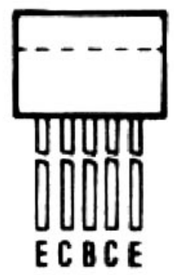	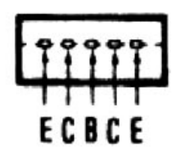
2SA 1209 2SA 1249 2SC 2911 2SC 3117 2SD 947	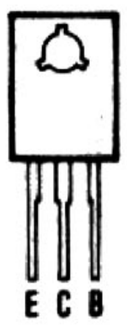	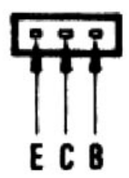	2SB 822 DTA 114	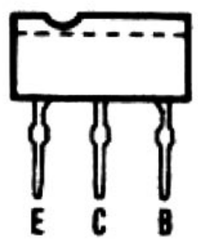	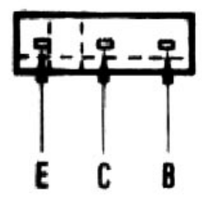
2SC 1583	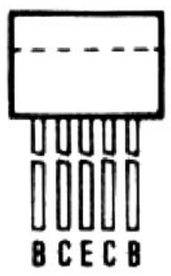		**TERMINAL NAME** B → BASE C → COLLECTOR E → EMITTER		

NJM 2068 DD / μPC 4570 HA TOP VIEWS

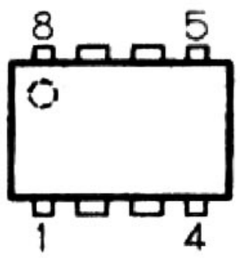

TC 9177 P TOP VIEW

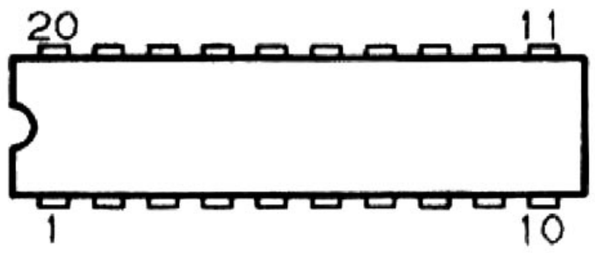

TC 9163 N TOP VIEW

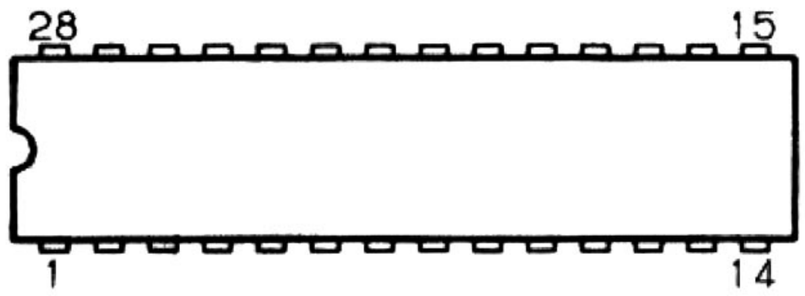

SWITCH POSITION TABLE

No.	Name	Position	No.	Name	Position
S201	POWER STANDBY Switch	OFF	S208	PHONO Switch	OFF
S202	MUTING Switch	OFF	S701	POWER Switch	OFF
S203	LOUDNESS Switch	OFF	S702	SPEAKER A Switch	OFF
S204	TAPE MONITOR Switch	OFF	S703	SPEAKER B Switch	OFF
S205	VIDEO/AUX Switch	OFF	S801	VOLUME UP Switch	OFF
S206	COMPACT DISC Switch	OFF	S802	VOLUME DOWN Switch	OFF
S207	TUNER Switch	OFF			

NOTES:

1. All resistors values are indicated in "ohm" ($K=10^3$, $M=10^6$).
2. All capacitors values are indicated in "μF" ($P=10^{-12}$).
3. All voltages indicated on the schematics are measured under the following conditions.
   a. Use a V.T.V.M.
   b. All voltages ±10 % with respect to chassis ground.
   c. No signals at input terminals.
   d. AC input at 120 volts 60 Hz.
4. This is a basic schematic diagram.

Because Fisher products are subject to continuous improvement, Fisher Corporation reserves the right to make any changes or modifications without notice.

www.hifiengine.com

SEMICONDUCTOR LEAD IDENTIFICATION (Continued)

TMP 47C460AN-1 TOP VIEW

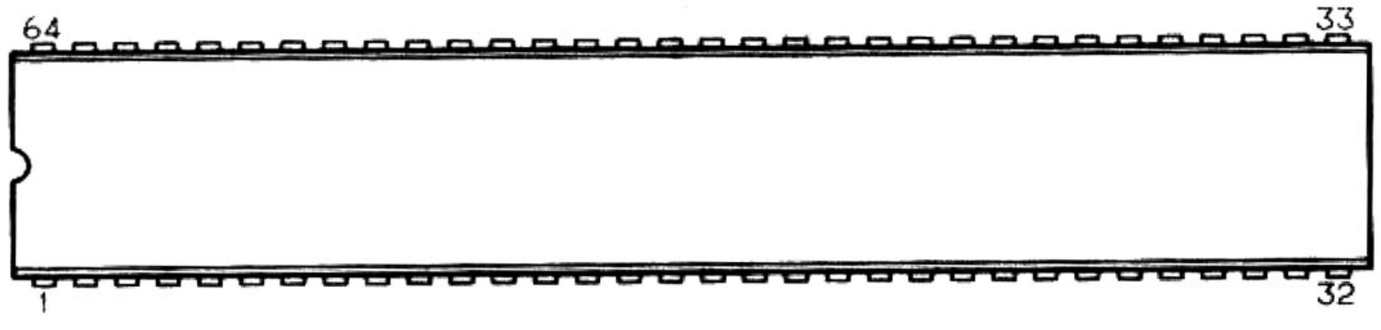

LC 7561 TOP/SIDE VIEW

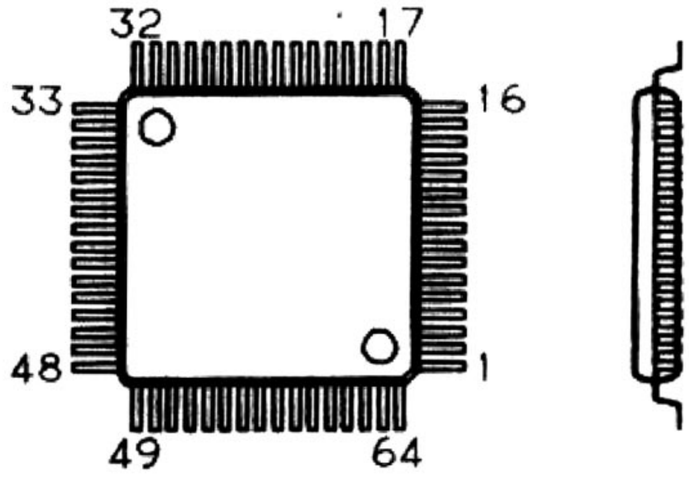

LA 6458 SS TOP/SIDE VIEW

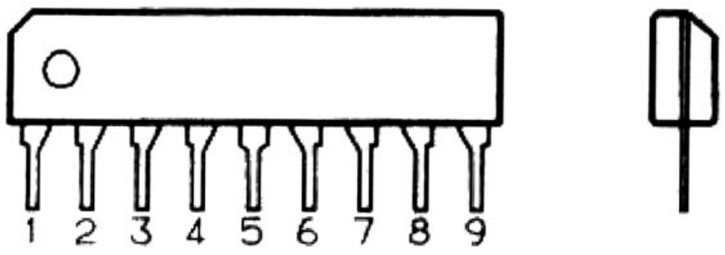

M 5227 P TOP VIEW

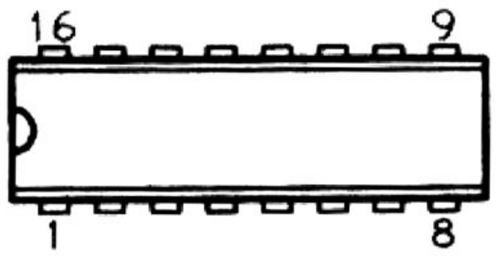

μPC 1490 HA TOP/SIDE VIEW

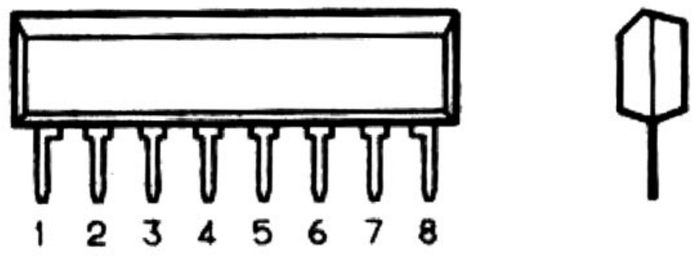

FUNCTIONAL BLOCK DIAGRAM

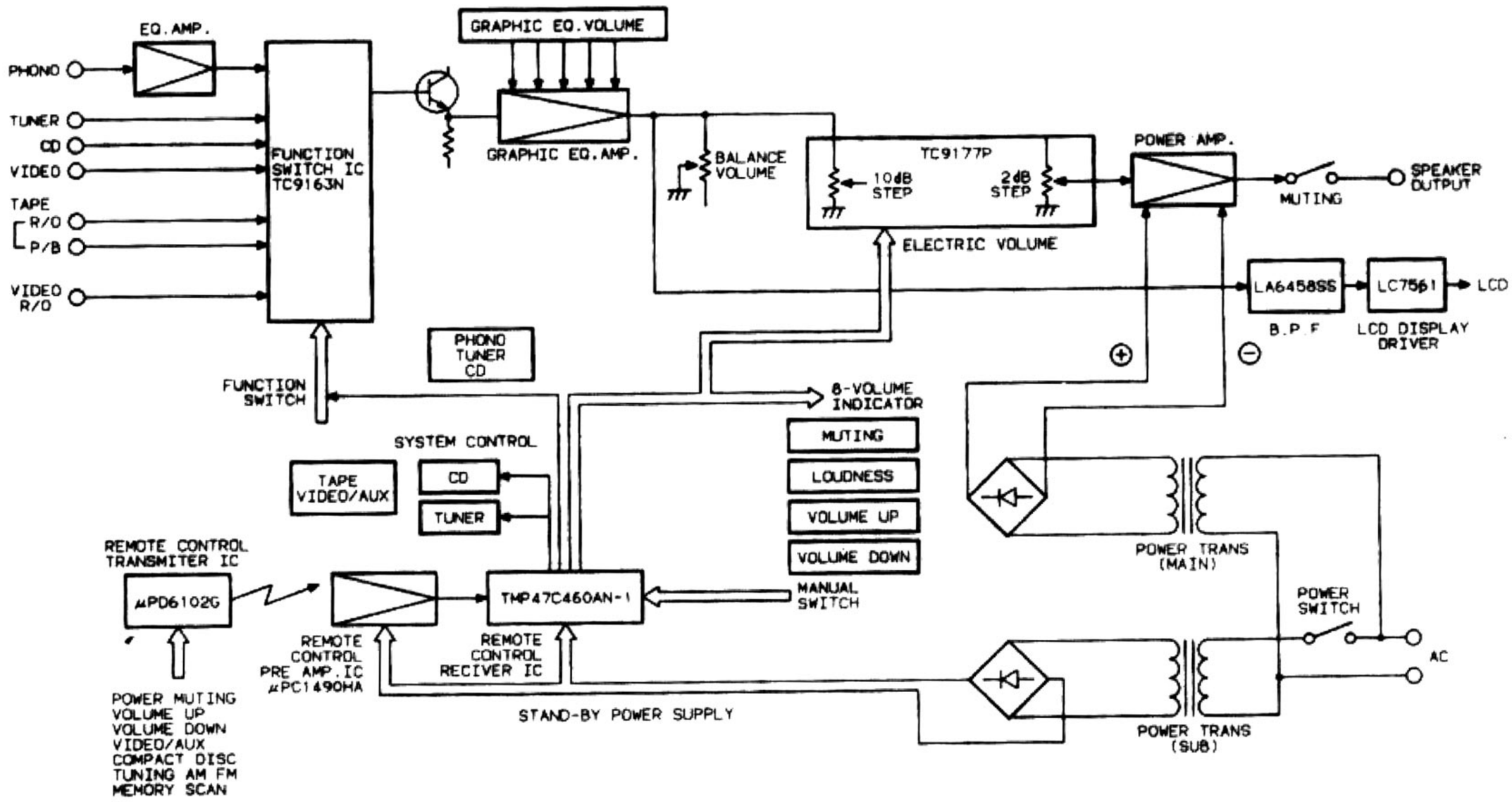

For parts or service contact

SFS CORPORATION: 1200 WEST WALNUT STREET, COMPTON, CALIFORNIA 90224

February/'87/4,000/K

Printed in Japan

www.hifiengine.com