AC-200
SR-200

AKAI SERVICE MANUAL

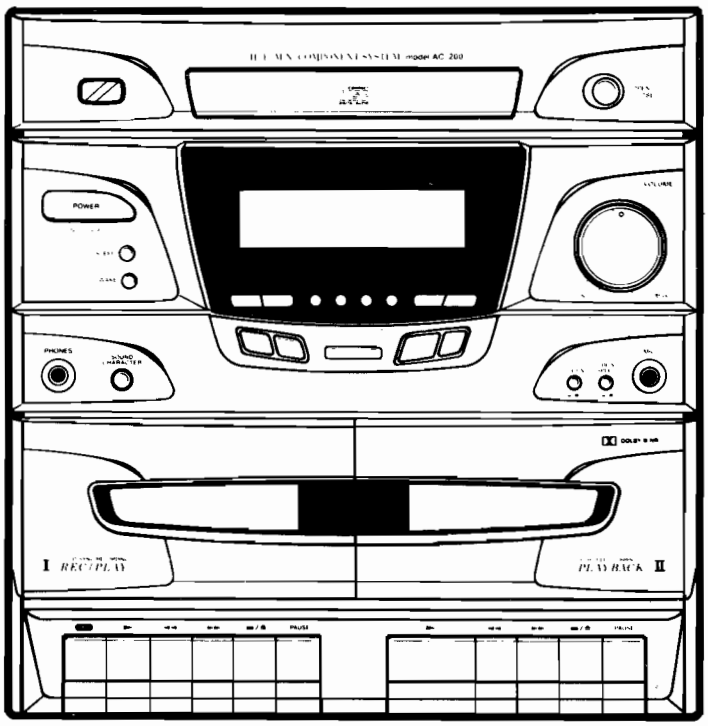

COMPACT disc DIGITAL AUDIO

MINI COMPONENT SYSTEM

AC-200
SR-200

CONTENTS

[AC-200]

SAFETY INSTRUCTIONS 4
INFORMATIONS 5
SPECIFICATIONS 6
Ⅰ. DISASSEMBLY 8
Ⅱ. PRINCIPAL PARTS LOCATIONS 9
Ⅲ. REPLACEMENT OF PRINCIPAL MECHANICAL PARTS 10
Ⅳ. ADJUSTMENT 14
Ⅴ. PARTS LIST 18
Ⅵ. WIRING DIAGRAM 28
Ⅶ. BLOCK DIAGRAM 29
Ⅷ. SCHEMATIC DIAGRAM 33
Ⅸ. PCB LAYOUT 41
INFORMATION OF ICs MI-COM 45
ABBREVIATIONS 52

[SR-200]

SPECIFICATIONS 56
SCHEMATIC DIAGRAM 56
PARTS LIST 57

SAFETY INSTRUCTIONS

PRECAUTIONS DURING SERVICING

1. Parts indentified by the ⚠ (*)symbol parts are critical for safety. Replace them only with parts whose numbers are specified.
2. In addition to safety, other parts and assemblies are specified for conformance with such regulations as those applying to spurious radiation.
   These must also be replaced only with specified replacements.
   Examples:RF converters, tuner units, antenna selection switches, RF cables, noise-blocking capacitors, noise-blocking filters, etc.
3. Use specified internal wiring. Note especially:
   1) Wires covered with PVC tubing
   2) Double insulated wires
   3) High voltage leads
4. Use specified insulating materials for hazardous live parts. Note especially:
   1) Insulating Tape
   2) PVC tubing
   3) Spacers(insulating barriers)
   4) Insulating sheets for transistors
   5) Plastic screws for fixing micro switches
5. When replacing AC primary side components (transformers, power cords, noise blocking capacitors, etc.), wrap ends of wires securely about the terminals before soldering.

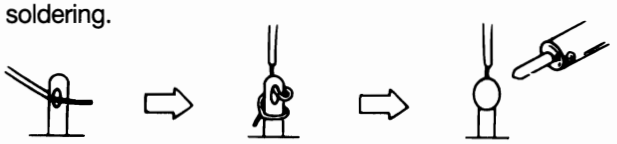

6. Make sure that wires do not contact heat generating parts (heat sinks, oxide metal film resistors, fusible resistors, etc.).
7. Check if replaced wires do not contact sharply edged or pointed parts.
8. Also check areas surrounding repaired parts.
9. Make sure that foreign objects (screws, solder droplets, etc,) do not remain inside the set.

MAKE YOUR CONTRIBUTION TO PROTECT THE ENVIRONMENT

Used batteries with the ISO symbol for recycling as well as small accumulators (rechargeable batteries), mini-batteries (cells) and starter batteries should not be thrown into the garbage can. Please leave them at an appropriate depot. All other household batteries can be thrown out with the household waste.

SAFETY CHECK AFTER SERVICING

After servicing, make measurements of leakage-current or resistance in order to check if exposed parts are acceptably insulated from the supply circuit.
The leakage-current measurement should be done between accessible metal parts (such as chassis, ground terminal, microphone jacks, signal input/output connectors, etc.) and the earth ground through a resister of 1500 ohms paralleled with a 0.15μF capacitor, under the unit's normal working condition.
The leakage-current should be less than 0.5mA rms AC.
The resistance measurement should be done between accesible exposed metal parts and power cord plug prongs with the power switch "ON"(if included). The resistance should be more than 2.2Mohms.

PRECAUTIONS IN REPAIRING

When repairing or adjusting the unit, please note the following points.

1. Do not put excessive pressure on the mechanical part (operation part), including the pick-up block, as extremely high mechanical precision is required in these parts.
2. When the base is removed for repair or adjustment, make sure that there are no metal objects between the P.C board or the mecha parts and the base.
3. The Micro-Computer and the CD signal processing ICs may be damaged by static electricity or leakage from a soldering iron during repairing. While soldering, please take the precautions against leakage as in the illustration.

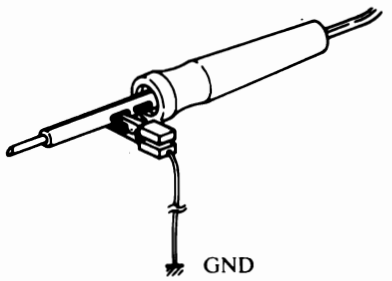

4. Do not loosen any screws in the pick-up block.
   Please refer to NOTE when replacing the pick up block.
5. To avoid hazardous invisible Laser Radiation, DO NOT look at the Laser Beam (Objective lens) directly.
6. On models for some countries, laser warning labels are affixed on and inside of the unit, as shown below. For your safety, read these labels carefully before repairing or adjusting the unit.

CAUTION

The use of controls or adjustments or the performance of procedures other than those specified herein may result in hazardous radiation.

[EUROPE, SCANDINAVIA, UK and AUSTRALIA]

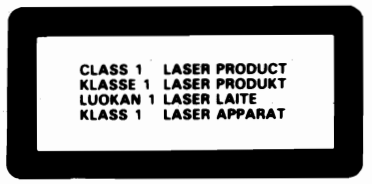

Label affixed on the rear panel of the unit

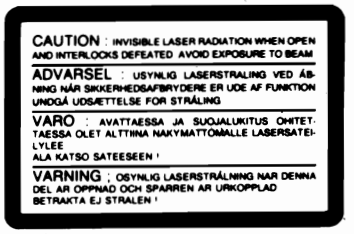

Label affixed on the CD MECHA BLOCK

INFORMATIONS

SYMBOLS FOR PRIMARY DESTINATION

Alphabet indicates the destination of the units as listed below.

Symbol	Prinncipal Destination
A	USA
B	UK
E	Europe(except, UK)
S	Australia
V	Germany
U	Universal
Y*	Custom version

VOLTAGE CONVERSION (U Y Model only)

Before connecting the power cord, set the VOLTAGE SELECTOR located on the rear panel of the AC-200 so that the correct voltage for your area is indicated.

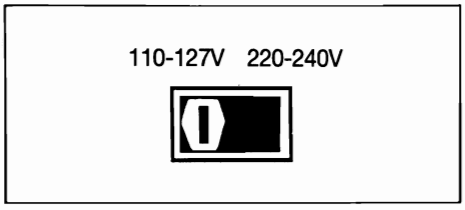

[U, Y_1, Y_2, Y_3, Y_4, Y_7]

SPECIFICATIONS

[Tuner Section]

Frequency range

FM ..... 87.5-108MHz(50KHz step)

MW ..... 531-1602KHz(9KHz step)

[E / V / S / B / U_5 / Y_1 / Y_3 / Y_7]

530-1610KHz(10KHz step)

[U_8 / Y_2 / Y_4]

LW ..... 144-288KHz(1KHz step)

SW ..... 3.8-12.5MHz(5KHz step)

Sensitivity

FM ..... 6μV(IHF, THD 3%) [EXCEPT V]

12μV(IHF, THD 3%) [V]

MW ..... 1000μV(IHF, THD 10%)

LW ..... 3000μV(IHF, THD 10%)

SW ..... 17μV(IHF, THD 10%)

S/N ratio(IHF)

FM Mono:65dB

Stereo:60dB

MW 40dB

LW 30dB

SW 40dB

Total Harmonic distortion(at 1KHz)

FM Mono:1.0%

Stereo:1.5%

MW 1.5%

LW 3.5%

SW 3.5%

Stereo separation ..... 35dB(at 1KHz)

[AMPLIFIER Section]

Power output ..... 25W+25W(6 ohm, 1KHz, 10% THD, EIAJ)

20W+20W(6 ohm, 1KHz, 1% THD, DIN)

Total harmonic distortion ..... 0.05%(−10dB for RMS)

Input sensitivity

MD/VCR ..... 400mV/47K ohms

S/N ratio

MD/VCR 75dB

Channel separation 55dB

SPECIFICATIONS

[Deck Section]

Track system	4 track, 2 channel system
Frequency response	100-10,000Hz ±3dB
Wow & Flutter	0.2%(WRMS)
S/N ratio	51dB
Total harmonic distortion	1.0%(Normal tape, at 400Hz)
Channel separation	40dB

[CD Section]

Pick up system	3 Beam laser
Sampling frequency	44.1KHz
Error correction system	Cross interleave reed solomon
Number of channels	2 Channel
Frequency response	20Hz~20KHz
S/N ratio	90dB
Wow & flutter	Below measurable limits
Total harmonic distortion	0.08% (at 1KHz)
Channel separation	80dB (at 1KHz)
Dynamic range	85dB (at 1KHz)

[General]

Power requirement	
E/V	AC 220-230V/50Hz
B	AC 230V/50Hz
S	AC 240V/50Hz
U/Y_1/Y_2/Y_3/Y_4/Y_7	AC 110-127V, 220-240V/50, 60Hz
Power consumption	60W
Dimension	270(W)×280(H)×328(D)mm
Weight	8.2Kg

* For improvement purposes, specifications and design are subject to change without notice.

I. DISASSEMBLY

1. REMOVAL OF COVER-TOP

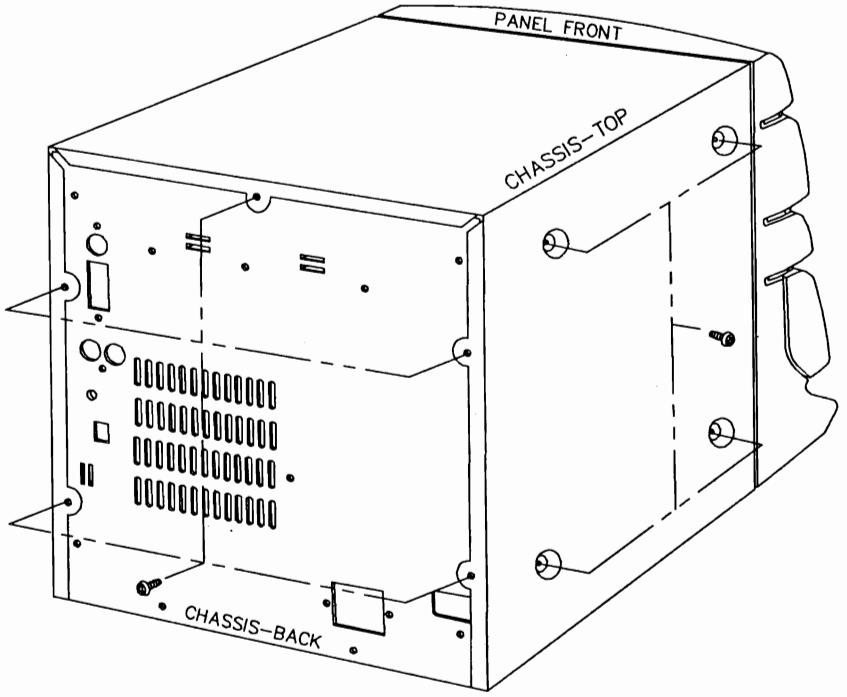

2. REMOVAL OF CASSETTE DECK & CD MECHA

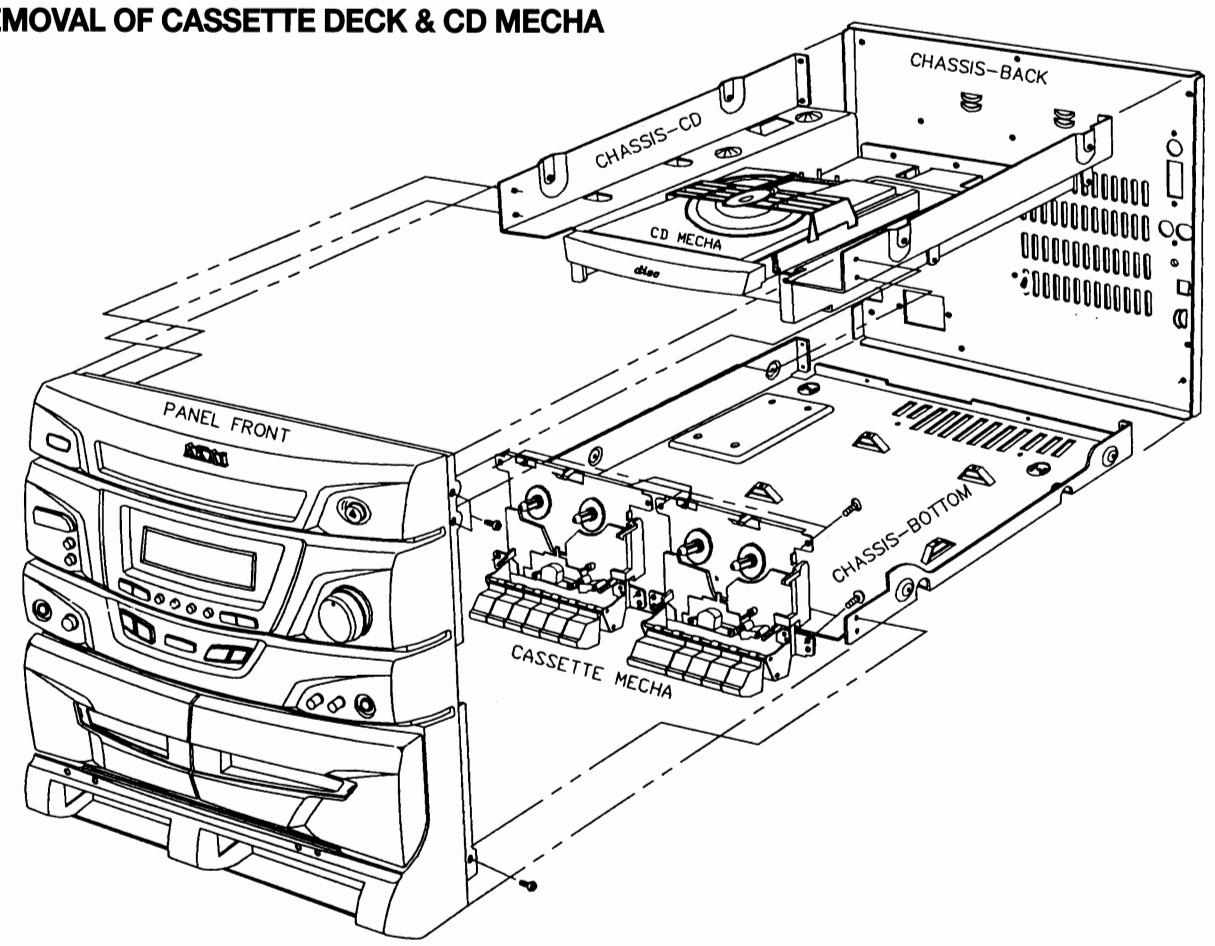

II. PRINCIPAL PARTS LOCATION

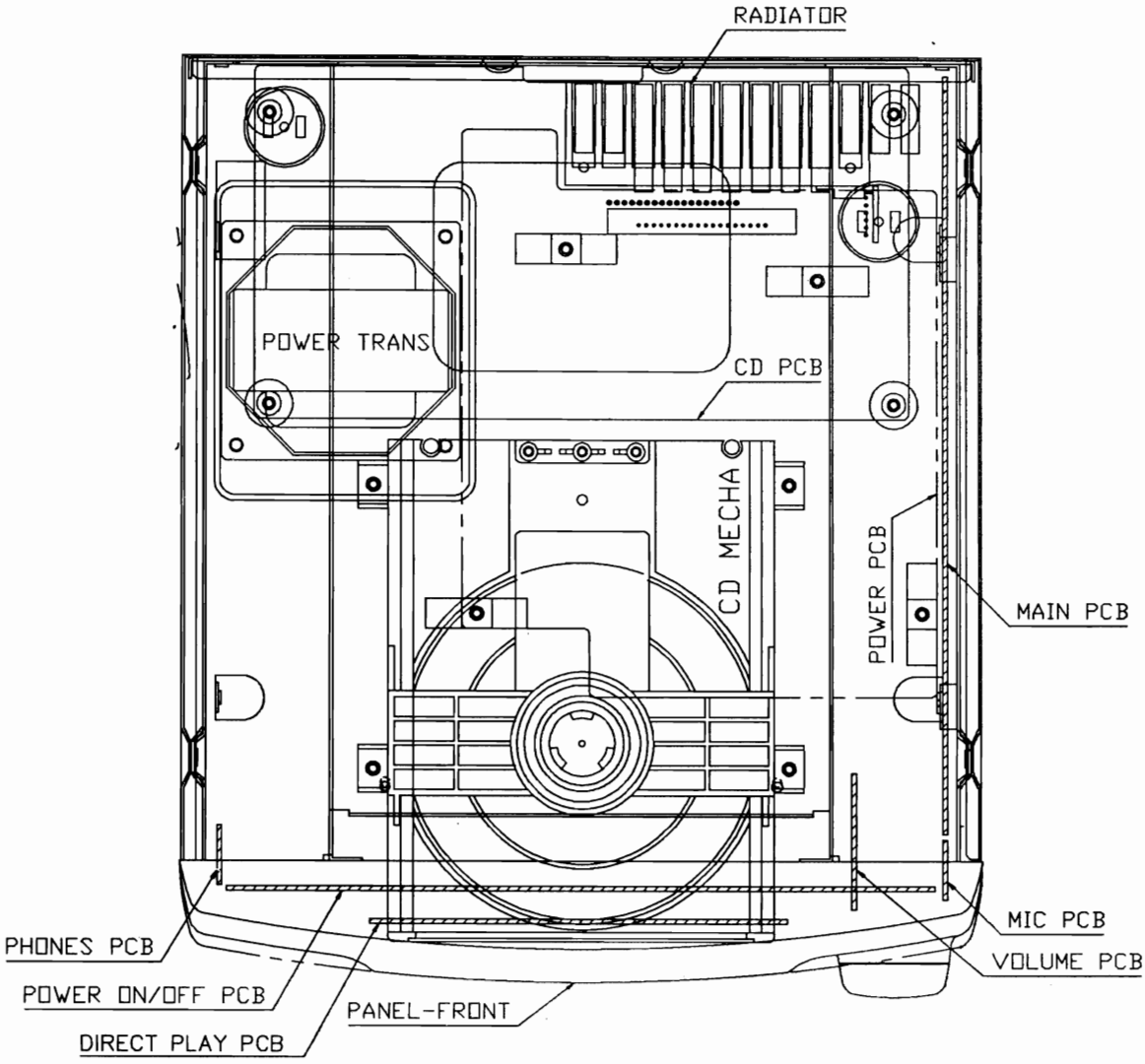

III. REPLACEMENT OF PRINCIPAL MECHANICAL PARTS

CD MECHANISM

1. DISMANTLING PROCEDURE OF THE COMPONENTS

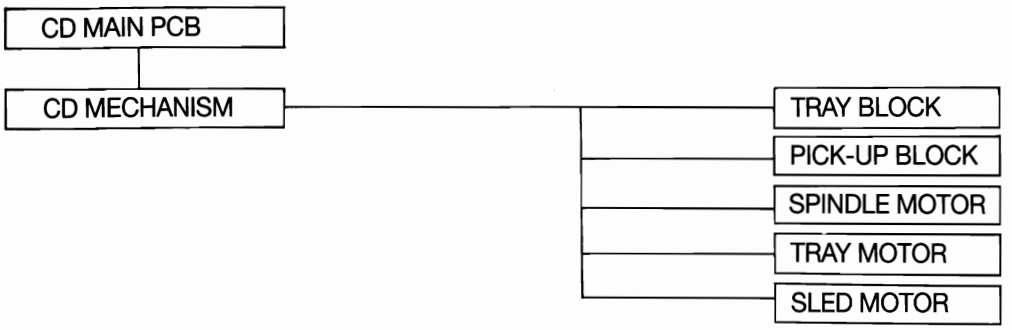

2.REMOVAL OF THE CD MAIN PCB

1) Disconnect the four connectors carefully (These are on the CD PCB. fig 1. CN601, CN602, CN605, CN606).

3.REMOVAL OF THE CD MECHANISM

1) Remove the four retaining screws, then remove the CD mecha. unit (fig 2)

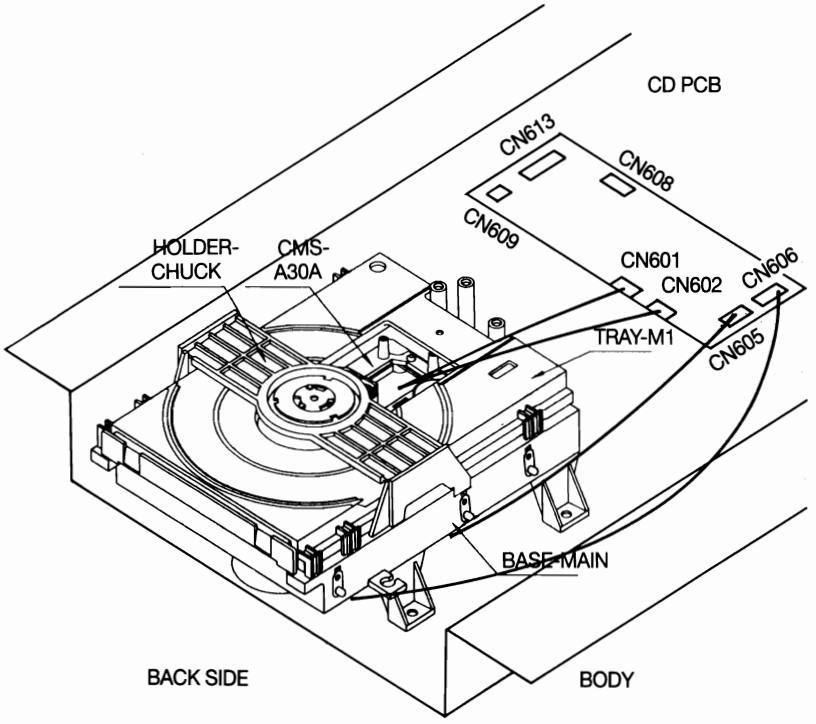

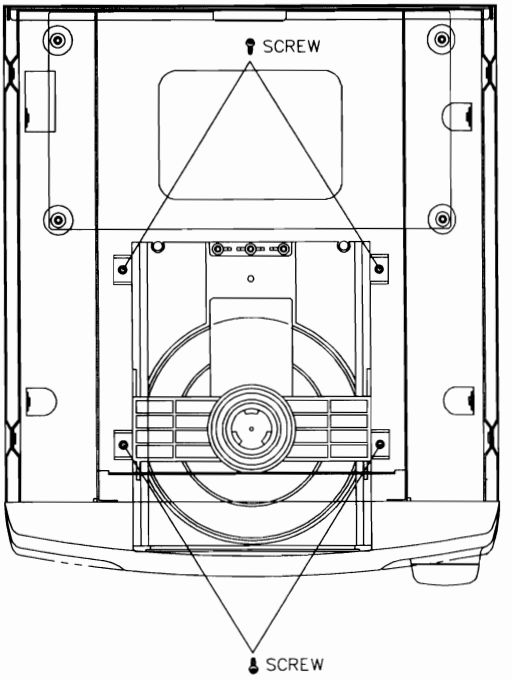

Fig. 1

4.REMOVAL OF THE TRAY BLOCK

1) Remove the four retaining screws for clamper and tray. (fig. 3)

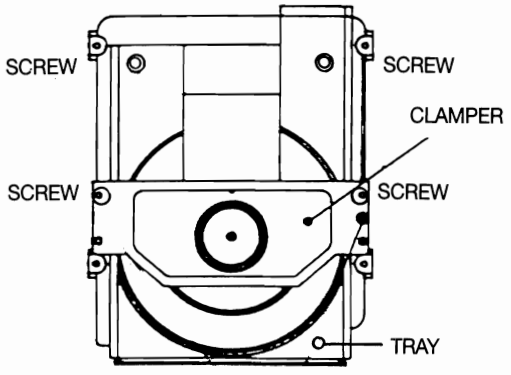

Fig. 3

2) Slide the bracket in the direction of the arrow (fig. 4)

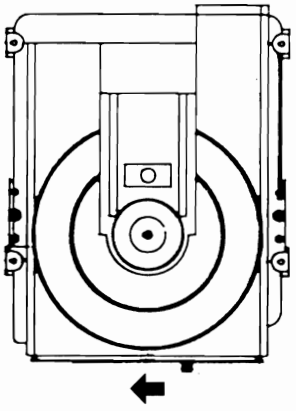

Fig. 4

3) Pull out the tray ass'y slowly in the direction of the arrow (fig. 5)

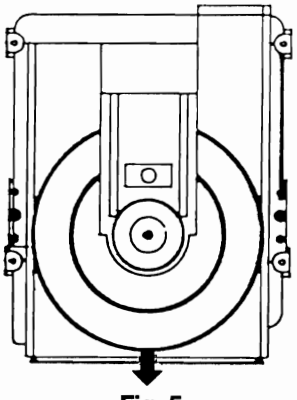

Fig. 5

4) Remove the tray block.

5.REPLACEMENT OF THE TRAY MOTOR

1) Remove the tray-belt
2) Unsolder the lead wires and PCB of the tran-motor with a soldering-iron.
3) Remove the tray-motor retaining screws.
4) Remove and replace the tray-motor.
5) Reassemble in the reverse order.

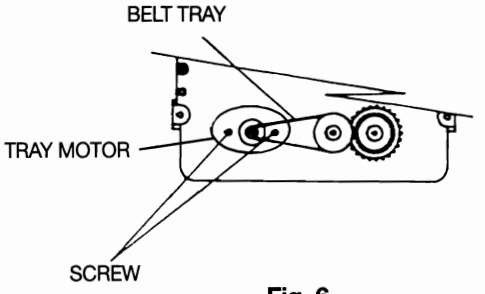

Fig. 6

6.REPLACEMENT OF THE SLED-MOTOR & REPLACEMENT OF THE SPINDLE -MOTOR

- Remove the four SHAFT CD and the four RUBBER CD for ASS'Y-MECHA FEED.
- Replacement of the spindle-motor itself is not recommended, because the adjustment of the turn table height is quite critical and necessitating the use of a special jig.
- Therefore, when need to replace the spindle-motor, please replace with a ASS'Y-MECHA FEED. (CD MECHA;CMS-A30A:ADCD-00110-031)

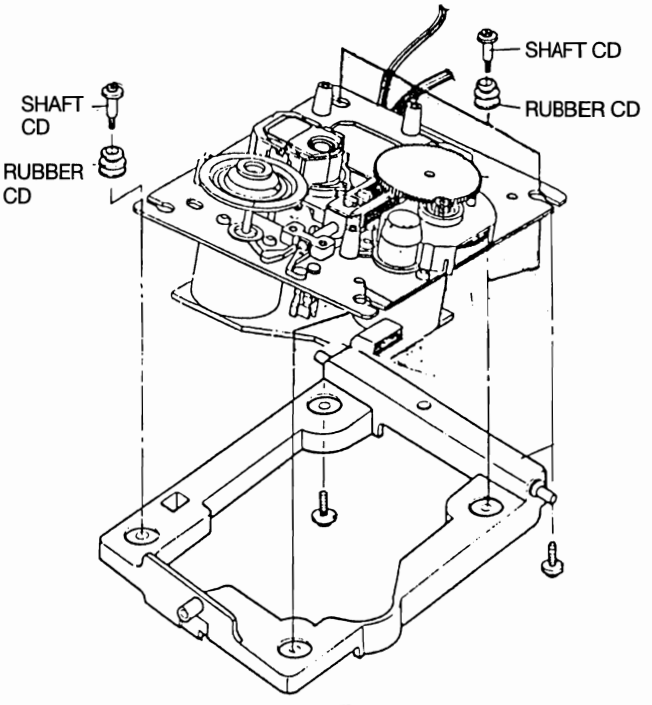

Fig. 7

2. CASSETTE DECK MECHANISM

2-1. REPLACEMENT OF THE PINCH ROLLER BLOCK

1) Pull the PINCH ROLLER BLOCK upward(⬆) while releasing the PINCH ROLLER RETAINING HOOK.
2) Reassemble in the reverse order.

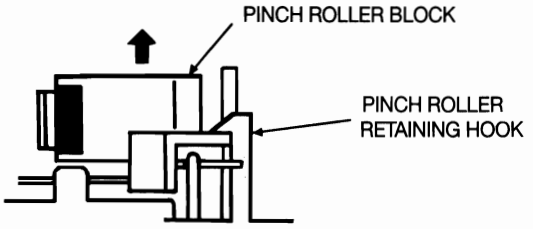

Fig. 2-1

2-2. REPLACEMENT OF THE PB HEAD (TAPE Ⅱ)

1) Remove the two HEAD RETAINING Ⓐ SCREWS.
2) Pull out the HEAD and disconnect all the lead wires with a soldering iron, then replace the PB HEAD.
3) Reassemble in the reverse order. After replacement, head azimuth and PB level adjustment must be performed.

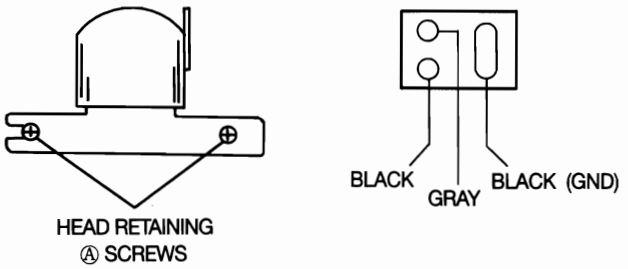

Fig. 2-2

2-3. REPLACEMENT OF THE REC/PB HEAD (TAPE Ⅰ)

1) Remove the two HEAD RETAINING Ⓐ SCREWS.
2) Pull out the HEAD and disconnect all lead wires with a soldering iron, then replace the REC/PB HEAD.
3) Reassemble in the reverse order, After replacement, head azimuth, PB level BIAS current and REC level adjustments must be performed.

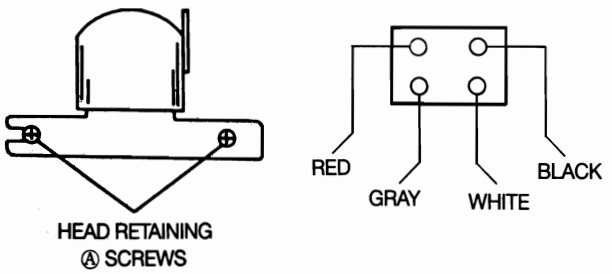

Fig. 2-3

2-4. REPLACEMENT OF THE CAPSTAN MOTOR

1) Remove the CAPSTAN MOTOR RETAINING Ⓐ SCREWS, then replace the CAPSTAN MOTOR.
2) Reassemble in the reverse order and set the DRIVE BELT. After replacement, tape speed adjustment must be performed.

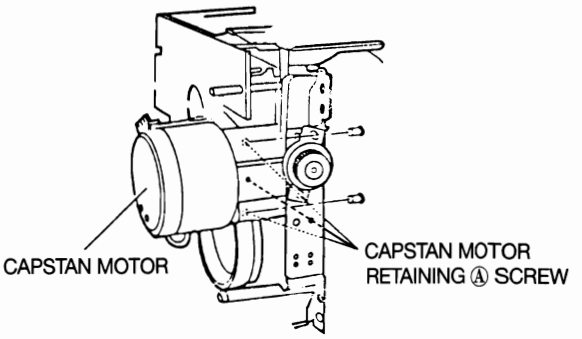

Fig. 2-4

2-5. REPLACEMENT OF THE DRIVE BELT

1) Remove the MOTOR RETAINING Ⓑ SCREWS and separate the MECHANISM-A and B. Replace the DRIVE BELT.
2) Reassemble in the reverse order. After replacement, confirm the tape speed and if the result is not satisfactory, adjust the tape speed.

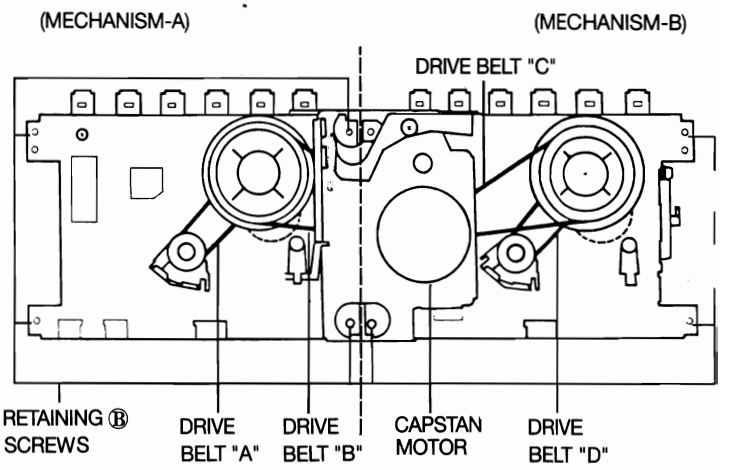

Fig. 2-5

2-6. ADJUSTMENT OF THE PB HEAD AND REC/PB HEAD AZIMUTH ALIGNMENT (TAPE Ⅰ & Ⅱ)

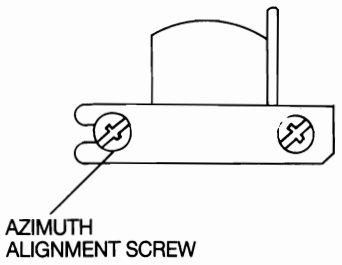

Fig. 2-6

1) Connect an AC milli-voltmeter to the TEST POINT TP401 refer to the illustration on page(17) and connect an oscilloscope's input CH-1 and CH-2 to the output of the AC milli-voltmeters.
2) Play back the 10kHz, HEAD AZIMUTH ALIGNMENT TEST TAPE(MTT-357G) then adjust the PB HEAD AZIMUTH ALIGNMENT SCREW respectively so that the reading on the AC milli-voltmeters are at maximum and waveforms on the oscilloscope are in the same phase.

1. TUNER INSTRUMENT CONNECTIONS

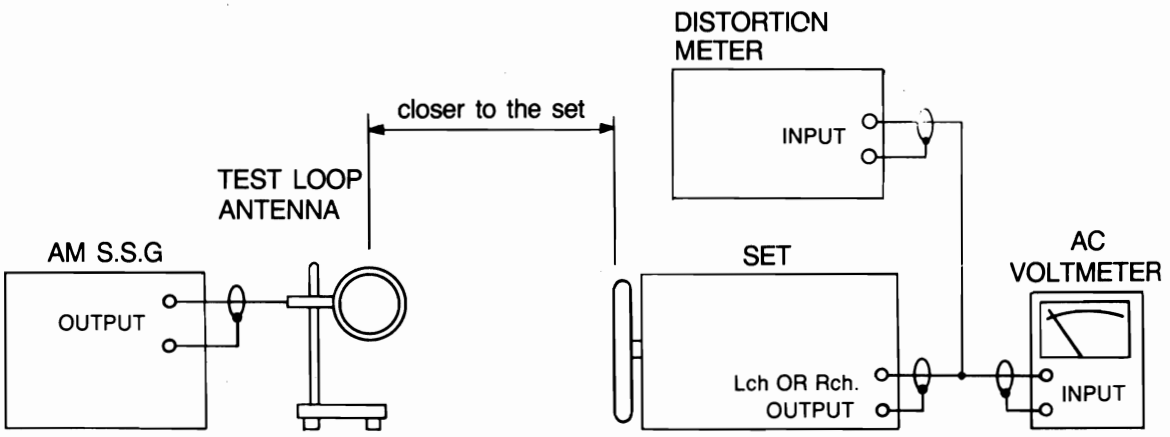

Instrument connection for AM (MW, LW) section adjustment

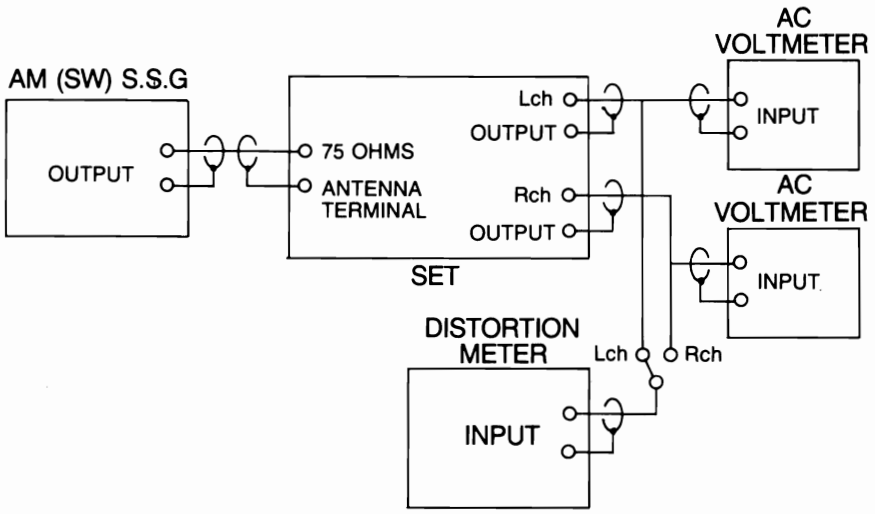

Instrument connection for AM (SW) section adjustment

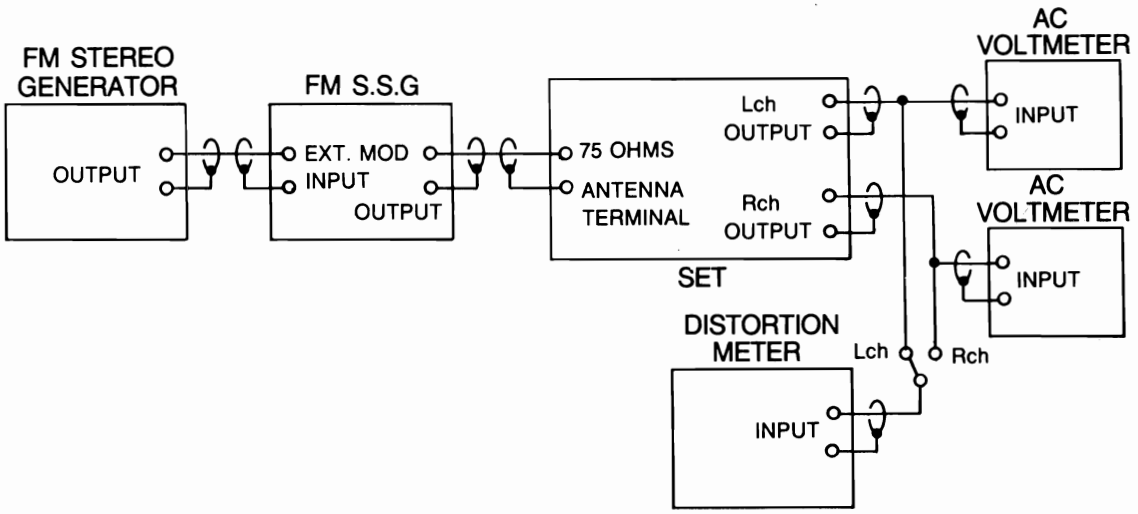

Instrument connection for FM section adjustment

2. TUNER ELECTRICAL ADJUSTMENT

NOTE: 1.Set the S.S.G. to 1KHz, 75KHz deviation for U, S, B, Y, V_2 or E model, 1KHz, 40KHz deviation for V_1 model.

STEP	ADJUSTMENT
	1. TEST CONDITIONS 2. MODE 3. CHECK POINT, ADJUSTMENT PART 4. REMARK(●) and RESULT(∗) ∗Speaker out Level = Reference 5 watts.

Test Point — Adjustment Part

FM

3 DISTORTION(STEREO)

1. 98.0MHz, 60dBμ(STEREO L or R channel only)
2. 98.0MHz
3. IFT (FRONT END) / (FE201)
4. ● Connect the distortion meter to SPEAKER OUT.
   ∗ Minimum Distortion

1 CENTER VOLTAGE

1. 98.0MHz, 60dBμ(MONO)
2. 98.0MHz PRESET 3ch
3. T206
4. ● Connect the DC Digital Voltmeter to ends of R252 and GND
   ∗ ±50mV for "0" VOLT

2 TUNING LED

1. 98.0MHz, 20dBμ(MONO)
2. 98.0MHz(MONO, preset-3ch)
3. "TUNED" on the LC display/SV202
4. ∗ "TUNED" on the LC display is lit.

4 STEREO SEPARATION

1. 98.0MHz, 60dBμ(STEREO L or R channel only)
2. 98.0MHz, PRESET 3ch
3. SV201
4. ● Connect the AC milli-volmeter to SPEAKER OUT.
   ∗ Minimum output level for opposite channel.

LW <SW>

NOTE: 1. Set the S.S.G to 1KHz 30% modulation on each adjustment.
2. Frequencies indicated in < > are for the SW model.

1 LW <SW> OSC

1. Set the S.S.G to 1KHz 30% modulation
2. 144KHz <3.8MHz> (preset 11ch) <11ch>
3. T204
4. ● Connect the Digital DC Voltmeter between JW35 and GND.
   ∗ 1.0V ± 0.1V

2 LW <SW> SENSITIVITY

1. Low-160KHz, 70dBμ <4MHz, 35dBμ>
   High-260KHz, 70dBμ <12MHz, 35dBμ>
2. Low-160KHz PRESET 12ch <4MHz>
   High-260KHz PRESET 14ch <12MHz>
3. T202
4. ● Connect the AC milli-Voltmeter to SPEAKER OUT.
   ∗ Maximum output level and minimum distortion
   ∗ For best result, repeat Low a High adjustment several times.

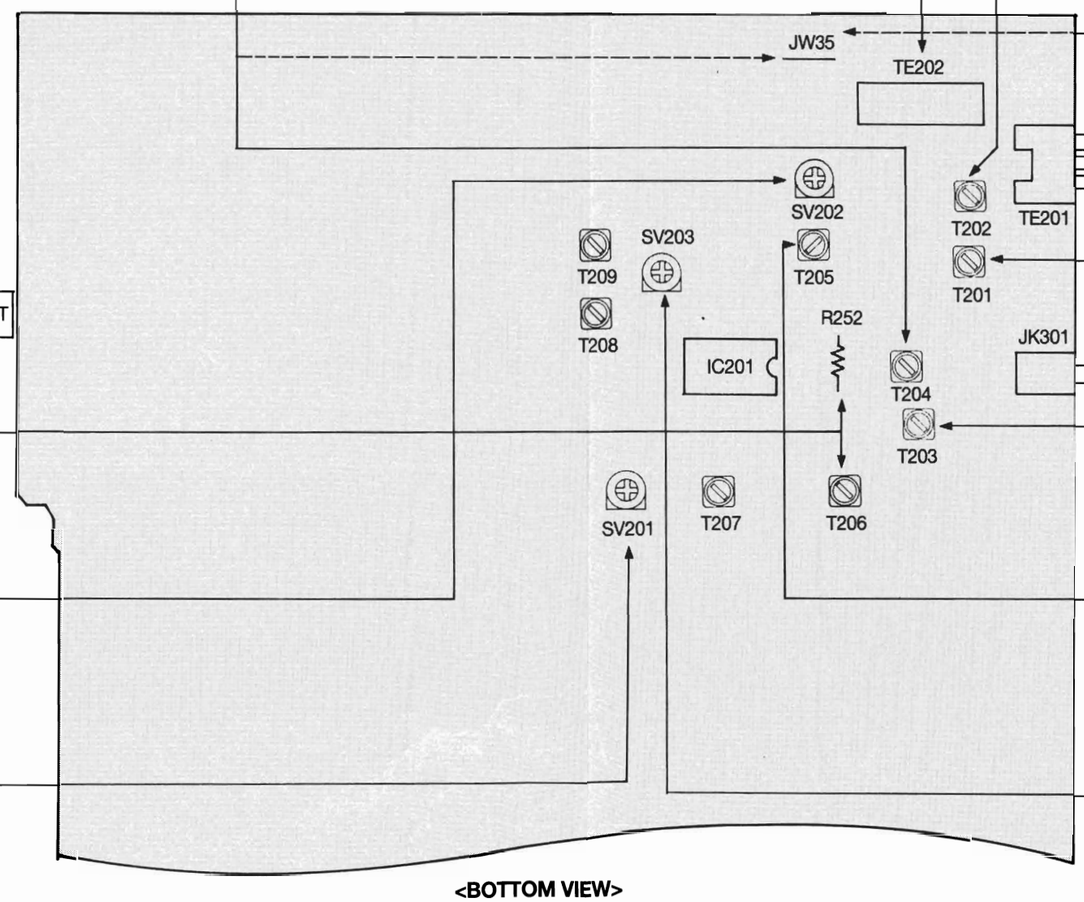

<BOTTOM VIEW>
MAIN P.C BOARD (A1U-309)

AM

NOTE: Set the S.S.G to 1KHz 30% modulation on each adjustment.

2 AM(MW) SENSITIVITY

1. 603KHz, 60dBμ(LOW) or 1,404KHz, 60dBμ
2. 603KHz(LOW), (PRESET 9ch)
3. T201
4. ● Connect the AC milli-Voltmeter to SPEAKER OUT.
   ∗ Maximum output level. & minimum distortion
   ∗ For best result, repeat Low a High adjustments several times.

1 AM(MW) OSC

1. Set the S.S.G to 1KHz 30% modulation
2. 531KHz(PRESET 6ch)
3. T203
4. ● Connect the Digital DC Voltmeter to between JW35 and GND.
   ∗ 1.0V ± 0.1V

3 AM IF

1. 603KHz, 60dBμ
2. 603KHz
3. T205
4. ● Connect the milli-Voltmeter to SPEAKER OUT.
   ∗ Maximum output level.

4 TUNING LED

1. 603KHz, 60dBμ
2. 603KHz
3. "TUNED" on the LC display/SV203
4. ∗ "TUNED" on the LC display is lit.

3. CD ELECTRICAL ADJUSTMENT

∗ Test mode can be selected the following method
1. While pressing the TUNING DOWN key and skip-(▶▶I)
2. Insert the AC Cord.

STEP	ADJUSTMENT
	1. TEST DISC 2. MODE or TEST mode 3. TEST POINT and ADJUSTMENT parts. 4. REMARK(●) and RESULT(∗)

Test Point Adjustment Part

TEST MODE	HOW TO SET EACH MODE	FUNCTION	MUSIC CALEN -DER
1	Press the PLAY/ PAUSE button	●FOCUS SERVO is on.	1
2	Press the PLAY/ PAUSE button	●CLV-S SERVO is on.	2
3	Press the PLAY/ PAUSE button	●TRACKING SERVO is on.	3
4	Press the PLAY/ PAUSE button	●CLV-A and SLED SERVO are on.	4
5	Press the PLAY/ PAUSE button	●ANTI SHOCK is on.	5

∗ After the TEST MODE5, press the STOP button to return to STOP.

4 TRACKING SERVO GAIN

1. Test disc A-BEX TCD-781
2. Test mode 3
3. IC601 48pin/SV601
4. ● Connect an oscilloscope to the IC601 48pin.
   ∗180mV

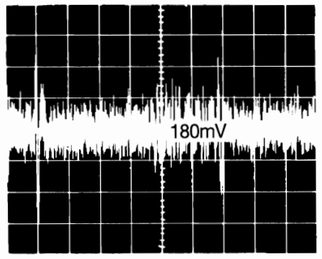

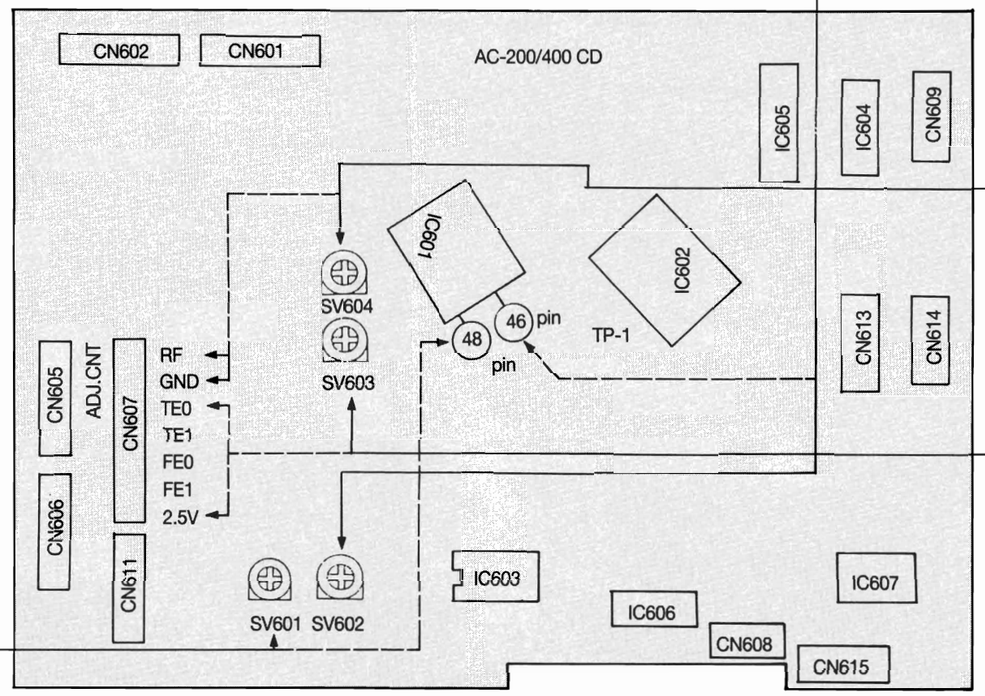

3 FOCUS SERVO GAIN

1. Test disc A-BEX TCD-781
2. Test mode 3
3. IC601 46pin/SV602
4. ● Connect an oscilloscope to the IC601 46pin
   ∗50mV

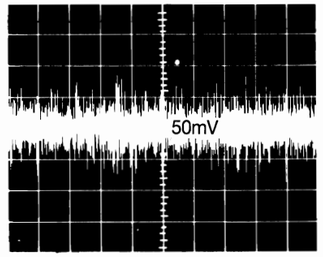

1 FOCUS BIAS

1. Test disc A-BEX TCD-781
2. Test mode 2 and 1
3. CN607(1, 2pin)/SV604
4. ● Connect an oscilloscope to the RF and GND Press PLAY button and adjust the RF signal to maximum
   ∗1.4V p-p

2 E-F BALANCE

1. Test disc A-BEX TCD-781
2. Test mode 3
3. CN607(3, 7pin)/SV603
4. ● Connect an oscilloscope to the TE0 or TE1 and 2.5V(CN607 7pin)
   ● Short CN613 while adjusting SV603 then, remove it after the adjustment
   ∗A=B

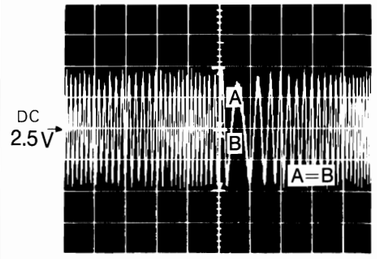

4. CASSETTE DECK ELECTRICAL ADJUSTMENT

[PRECAUTIONS BEFORE ADJUSTMENT]

1. Before adjustment, clean and de-magnetize the heads and tape guides.
2. Set the Dolby NR switch off.
3. Use the following recording test tapes.
   NORMAL position : TDK AC-224
   CrO_2 position : TDK AC-513
4. DOLBY LINE OUT =TP401

STEP	ADJUSTMENT
	1. TEST TAPE/TEST CONDITION 2. MODE 3. CHECK POINT/ADJUSTMENT PART 4. REMARK(●) and RESULT(∗)

Test Point — Adjustment Part

8 NORMAL POSITION BIAS

1. 1KHz and 10KHz, −26dBs(DOLBY OUT) NORMAL recording test tape(AC-224)
2. REC → PLAY(REC input 1KHz and, 10KHz at the function MD/VCR)
3. DOLBY OUT/SV407(R-CH), SV408(L-CH)
4. ● Connect an AC milli-voltmeter between DOLBY OUT(TP401)
   ∗ Playback levels of 1KHz and 10KHz are equal or within +/−1.0dB

6 BIAS OSC FREQUENCY

1. No input signal, CrO_2 recording test tape. (AC-513)
2. REC(at setting BEAT CUT SW 2)
3. JW116/T403(REC OSC COIL)
4. ● Connect a frequency counter between JW116 signal and JW117 GND.
   ∗ 100KHz ± 5KHz

7 RECORDING LEVEL

1. NORMAL tape(AC-224), input signal 1KHz at the function MD/VCR, −6dBs for DOLBY LEVEL
2. REC → PLAY
3. DOLBY OUT(TP401)/SV405(R-CH), SV406(L-CH)
4. ● Connect an AC milli-voltmeter to DOLBY OUT(TP401)
   ∗ −6dBs ± 1dBs

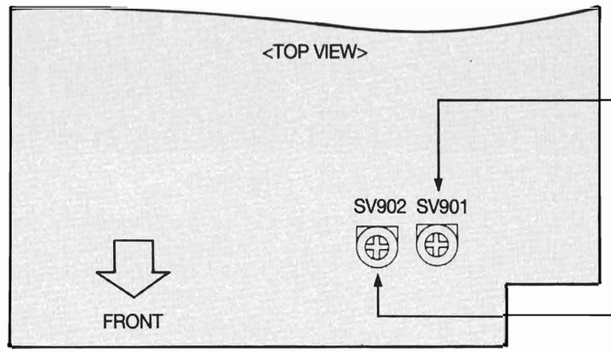

AMP POWER P.C BOARD (A2U-151A)

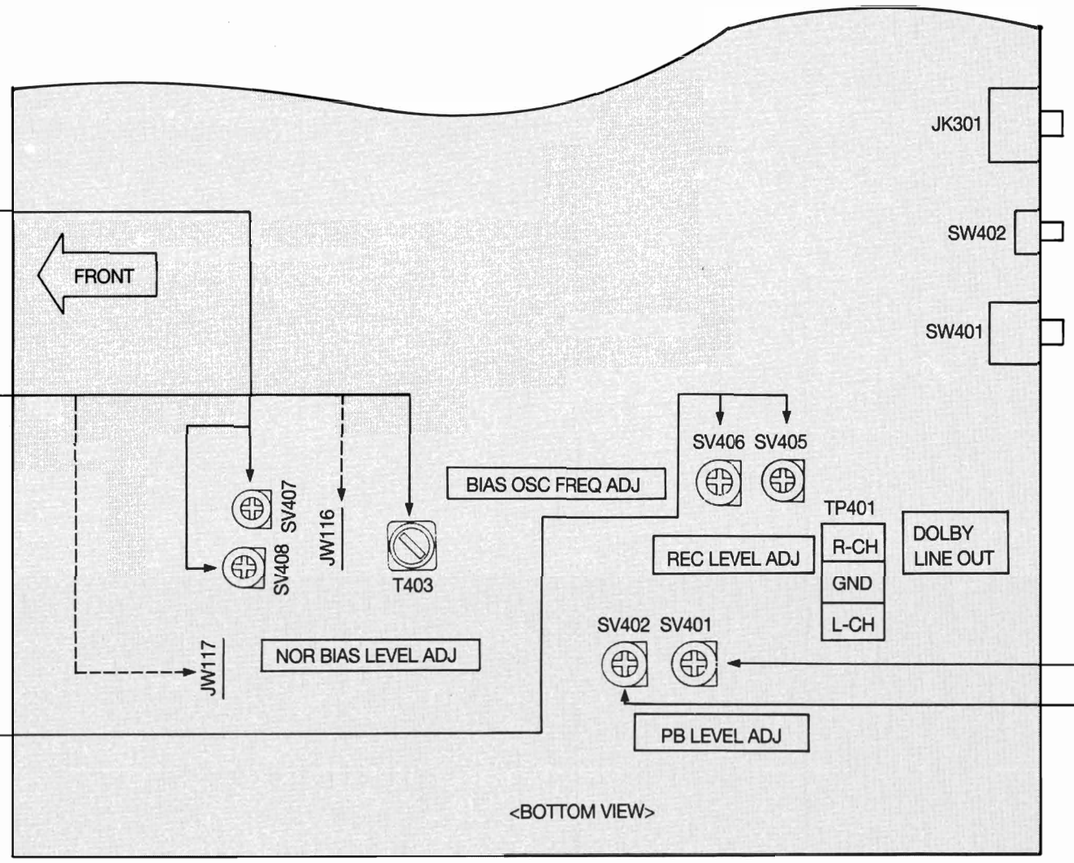

MAIN P.C BOARD (A1U-309)

1 TAPE Ⅱ HIGH (×2) SPEED

1. 3,000Hz test tape (MTT-111DN)
2. TAPE Ⅱ :play, TAPE Ⅰ :REC and HIGH DUBBING
3. DOLBY OUT(TP401)/SV901
4. ● Connect a frequency counter to DOLBY OUT(TP401)
   ∗ 6000Hz ± 60Hz

2 TAPE Ⅱ NORMAL(×1) SPEED

1. 3,000Hz test tape(MTT-111DN)
2. PLAY
3. DOLBY OUT(TP401)/SV902
4. ● Connect an AC milli-voltmeter to DOLBY OUT(TP401)
   ∗ 3000Hz ± 30Hz

3 HEAD AZIMUTH ALIGNMENT(TAPE Ⅰ & Ⅱ)

1. 10KHz test tape (MTT-357G)
2. PLAY
3. DOLBY OUT(TP401)/AZIMUTH ALIGNMENT SCREW
4. ● Connect an AC milli-voltmeter to DOLBY OUT(TP401)
   ∗ Maximum output level.

4 TAPE Ⅱ PB LEVEL

1. 400Hz test tape(MTT-150)
2. PLAY
3. DOLBY OUT(TP401)/SV402(L-ch)
4. ● Connect an AC milli-voltmeter to DOLBY OUT(TP401)
   ∗ 580mV

5 TAPE Ⅰ PB LEVEL

1. 400Hz test tape(MTT-150)
2. PLAY
3. DOLBY OUT(TP401)/SV401(L-ch)
4. ● Connect an AC milli-voltmeter to DOLBY OUT(TP401)
   ∗ 580mV

V. PARTS LIST

ATTENTION

1. When placing an order for parts, be sure to list Part No, Model No. and the description of each part. Otherwise, the non-delivery of the part or the delivery of a wrong part may result.
2. Please make sure that Part No. is correct when ordering. If not, a part different from the one you ordered may be delivered.
3. Since the parts shown in Parts List of Preliminary Service Manual may have been the subject of changes, please use this Parts List for all future reference.

[**NOTE**]

1. This Parts List lists those parts which are considered necessary for repairs. Other common parts, such as resistors and capacitors, are listed in the "Common List for Service Parts" from which these parts should be selected and stocked.
2. The Recommended Spare Parts List shows those parts in the Parts List which are considered particularly important for service.
3. Parts not shown in the Parts List and "Common List for Service Parts" will not in principle be supplied.

WARNING

⚠(*) INDICATED SAFETY CRITICAL COMPONENTS. FOR CONTINUED SAFETY, REPLACE SAFETY CRITICAL COMPONENTS ONLY WITH MANUFACTURE'S RECOMMENDED PARTS.

AVERTISSEMENT

⚠(*) IL INDIQUE LES COMPOSANTS CRITIQUES DE SÉCURITÉ. POUR MAINTENIR LE DEGRÉ DE SÉCURITÉDE L'APPAREIL, NE REMPLACER QUE DES PIÉCES RECOMMANDEES PAR LÉ FABRICANT.

1. RECOMMEND SPARE PARTS

We suggest you to stock the following Recommended Spare Part items listed below since they can cover most of the routine service

Ref. No.	Part No.	Description
1	* KDAC-0230F-6N8	CORD-AC [E, V, U, Y] KKP419C KLCE-2F 0.75 CE
2	* KDAC-0270E-4FB	CORD-AC[B] CW3201(5A)H03VVH2F 2 × 0.75
3	* KDAC-0220F-2VA	CORD-AC[S] KKP-560 KLCE-2F 0.75CE
4	DECA-00186-00P	MECHA CASSETTE TN-21ZSW-1262
5	DECD-00111-01F	MECHA CDP CMS-A3G6TK
6	* FGFB-S2002-137	FUSE GLASS 2A 250V FST034.3120 T
7	* FGFB-S8001-137	FUSE GLASS 800mA 250V FST0034.3116 T
8	LLA3-06900-B10	CARD CABLE KF2B 31/90 P6 S4 B3
9	LLA3-07381-E10	CARD CABLE KF2B 23/380 P7 S4 B3
10	* PTAJ-02340-Y4V	TRANSFORMER-POWER [E, V, B] A74-234Y-V 74 × 42 230V Y
	* PTAJ-02340-Z4A	TRANSFORMER-POWER [S] A74-234Z-A 74 × 42 240V
	* PTAJ-02340-S4P	TRANSFORMER-POWER [U, Y] A74-234S-974 × 42 120V/230V
11	DDTR-00040-T10	DIODE-RECTIFIER 1N4004 (400V 1A) DO-41 T
12	DDTS-00060-SO0	DIODE-SI 1SS131 (90V 0.13A) DO-40 T
13	TRTA-0042E-SOS	TRANSISTOR P-H FREQ DTA124E-S TO92M
14	TRTC-0061E-SOS	TRANSISTOR N-H FREQ DTC124E-S TO92M
15	* SWVS-00090-S5K	SWITCH-VOLTAGE SEL [U, Y] ESD-26604A 250V 5A

CASSETTE MECHA BLOCK (TN-21ZSW-1262)

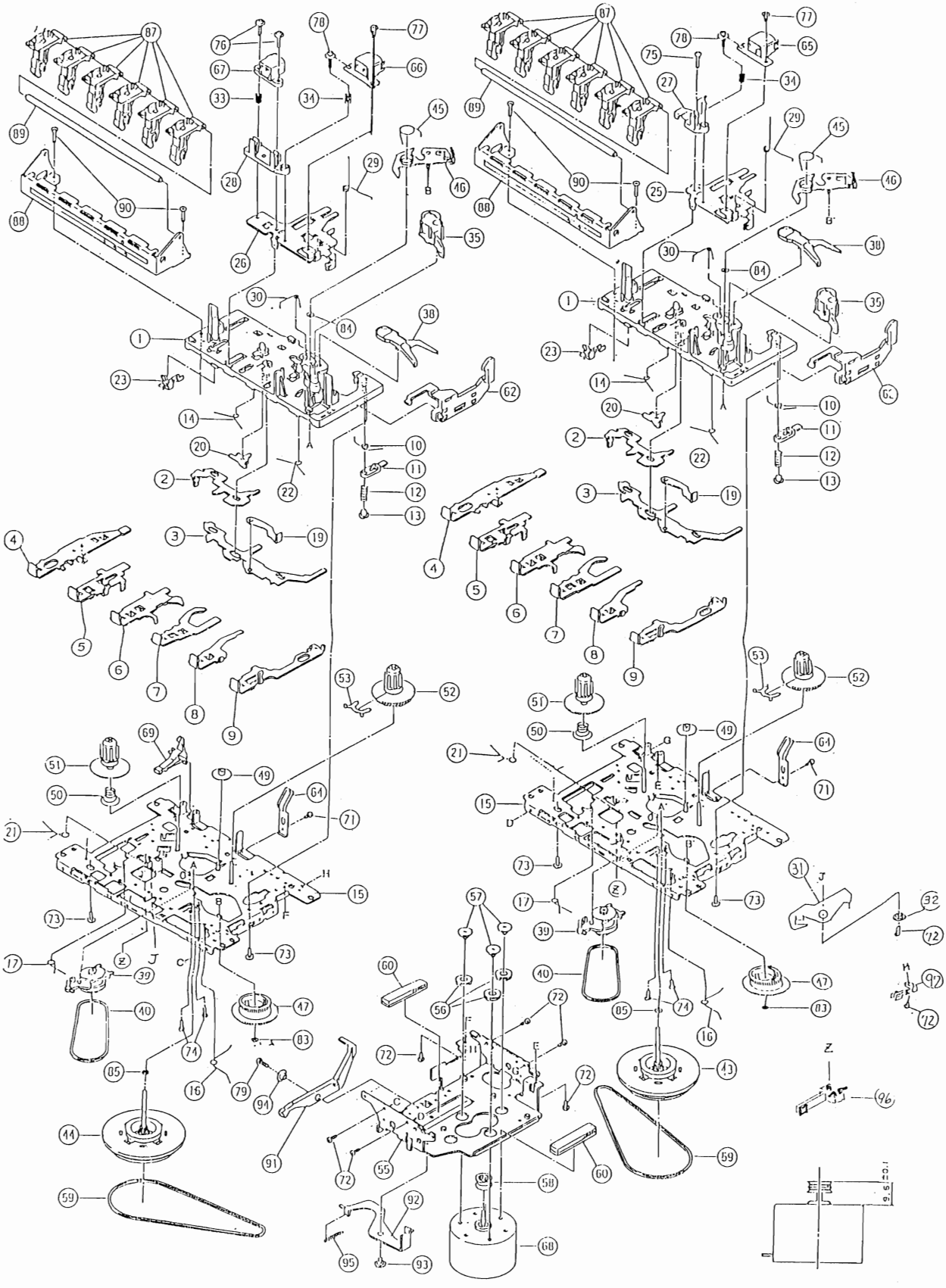

2. MECHA BLOCK (TAPE DECK)

Ref. No.	Part No.	Description
1	ADCA-00186-033	BASE ASS'Y
2	ADCA-00186-002	SWITCH ACTUATOR
3	ADCA-00186-003	PUSH BUTTON ACTUATOR
4	ADCA-00186-004	REC BUTTON LEVER
5	ADCA-00186-005	PLAY BUTTON LEVER
6	ADCA-00186-006	REW BUTTON LEVER
7	ADCA-00186-007	FF BUTTON LEVER
8	ADCA-00186-008	STOP BUTTON LEVER
9	ADCA-00186-009	PAUSE BUTTON LEVER
10	ADCA-00186-010	P CONTROL SPRING
11	ADCA-00186-011	PAUSE LEVER (E)
12	ADCA-00186-012	PAUSE LEVER SPRING
13	ADCA-00186-013	PAUSE STOPPER
14	ADCA-00186-014	BUTTON LEVER SPRING (A)
15	ADCA-00186-015	CHASSIS ASS'Y'
16	ADCA-00186-016	E ACTUATOR SPRING
17	ADCA-00186-017	P.S. LEVER SPRING
19	ADCA-00186-018	E KICK LEVER
20	ADCA-00186-019	PR STOPPER
21	ADCA-00186-020	REC BUTTON LEVER SPRING
22	ADCA-00186-021	BUTTON LEVER SPRING (B)
23	ADCA-00186-022	LEAF SWITCH MSW-1541T
25	ADCA-00186-023	HEAD PANEL
26	ADCA-00186-024	HEAD PANEL
27	ADCA-00186-025	HEAD BASE
28	ADCA-00186-026	HEAD BASE
29	ADCA-00186-027	PANEL P SPRING
30	ADCA-00186-028	M CONTROL SPRING
31	ADCA-00186-029	REC ARM
32	ADCA-00186-030	P ARM COLLAR
33	ADCA-00186-031	EH SPRING
34	ADCA-00186-032	AZIMUTH SPRING
35	ADCA-00186-033	PINCH ROLLER ARM ASS'Y
38	ADCA-00186-034	SENSING LEVER
39	ADCA-00186-035	RF CLUTCH ASS'Y
40	ADCA-00186-036	RF BELT
43	ADCA-00186-037	FLYWHEEL ASS'Y
44	ADCA-00186-038	FLYWHEEL ASS'Y
45	ADCA-00186-039	GEAR PLATE SPRING
46	ADCA-00186-040	GEAR PLATE ASS'Y
47	ADCA-00186-041	CAM GEAR
49	ADCA-00186-042	FF GEAR
50	ADCA-00186-043	BACK TENSION SPRING
51	ADCA-00186-044	SUPPLY REEL ASS'Y
52	ADCA-00186-045	TAKE UP REEL ASS'Y
53	ADCA-00186-046	SENSOR
55	ADCA-00186-047	MOTOR BRACKET
56	ADCA-00186-048	MOTOR RUBBER
57	ADCA-00186-049	MOTOR COLLER SCREW
58	ADCA-00186-050	MOTOR PULLEY
59	ADCA-00186-051	MAIN BELT
60	ADCA-00186-052	ANTI VIBRATION FELT MAT
62	ADCA-00186-053	EJECT SLIDE LEVER
64	ADCA-00186-054	PACK SPRING
65	ADCA-00186-055	P HEAD SS15R-AA4N1
66	ADCA-00186-056	R.P. HEAD SS15R-AA4N1
67	ADCA-00186-057	E HEAD E-321PL-0201
68	ADCA-00186-058	MOTOR EG-530YD-2B
69	ADCA-00186-059	RECORD SAFETY LEVER
71	ADCA-00186-060	C TAPPING SCREW M2×3
72	ADCA-00186-061	C TAPPING SCREW M2×4
73	ADCA-00186-062	P TAPPING BING . SCREW M2×5
74	ADCA-00186-063	TAPPING SCREW (FOR CAMERA) M2×45
75	ADCA-00186-064	SCREW M2×6
76	ADCA-00186-065	+ − CAP SCREW M2×8
77	ADCA-00186-066	+ BIND SCREW M2×3
78	ADCA-00186-067	AZIMUTH SCREW M2×7
79	ADCA-00186-068	C TAPPING SCREW M2×6
83	ADCA-00186-069	P WASHER CUT 1.2×3.8×0.3
84	ADCA-00186-070	P WASHER CUT 1.45×3.8×0.5
85	ADCA-00186-071	P WASHER 2×3.5×0.3
87	ADCA-00186-072	OPERATION LEVER
88	ADCA-00186-073	BUTTON FRAME (S)
89	ADCA-00186-074	BUTTON LEVER SHAFT
90	ADCA-00186-075	S TAPPING SCREW (FOR CAMERA) M2×8(GUIDE)
91	ADCA-00186-076	P KICK LEVER (B)
92	ADCA-00186-077	P KICK LEVER (A)
93	ADCA-00186-078	PK COLLER SCREW (A)
94	ADCA-00186-079	COLLER (B)
95	ADCA-00186-080	P KICK LEVER SPRING
96	ADCA-00186-081	LEAF SWITCH MSW-17820
97	ADCA-00186-082	LEAF SWITCH MSW-1275
98	ADCA-00186-083	LEAF SWITCH MSW-1664
99	ADCA-00186-084	CAP TAPPING SCREW 2×5

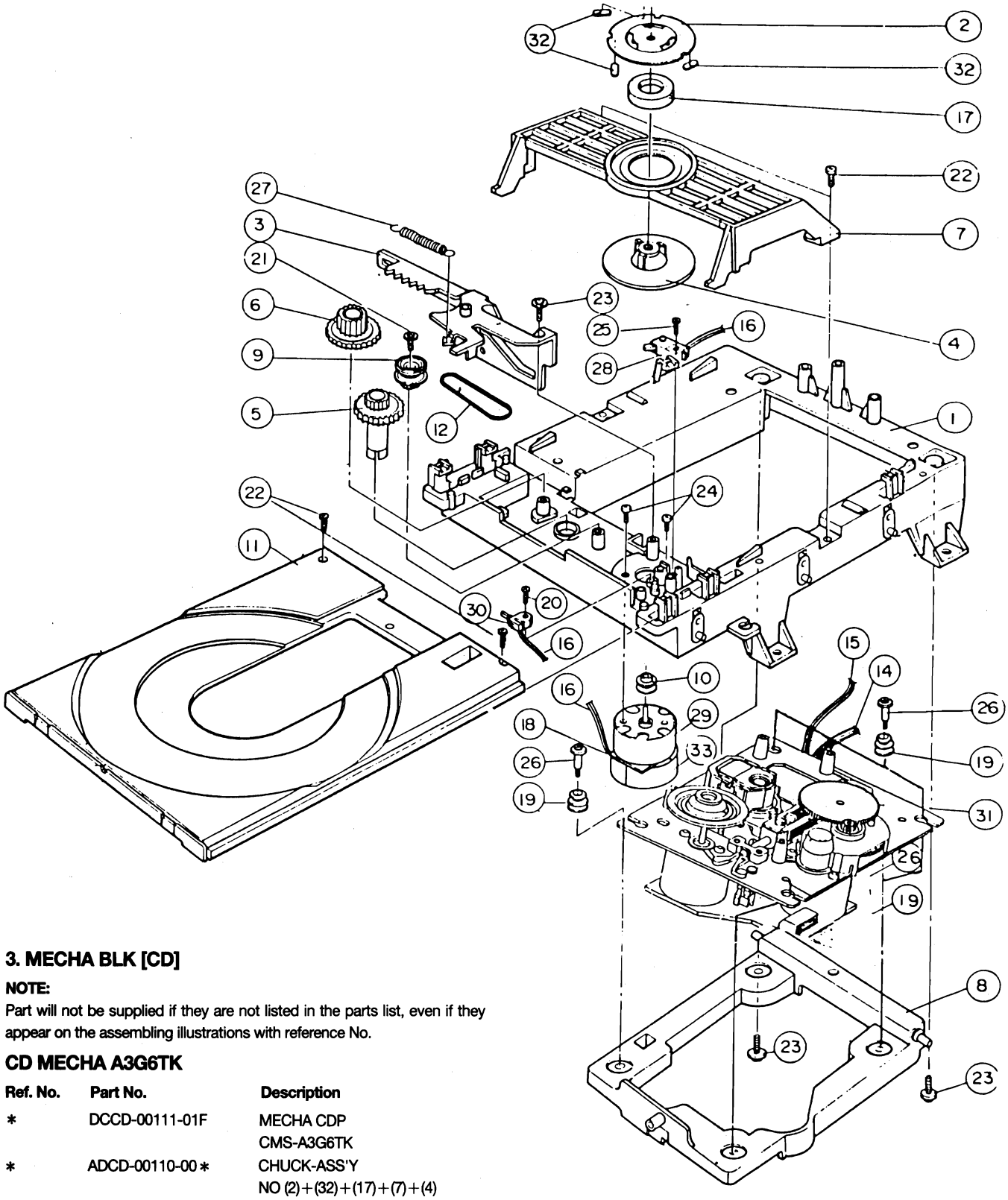

3. MECHA BLK [CD]

NOTE:

Part will not be supplied if they are not listed in the parts list, even if they appear on the assembling illustrations with reference No.

CD MECHA A3G6TK

Ref. No.	Part No.	Description
*	DCCD-00111-01F	MECHA CDP CMS-A3G6TK
*	ADCD-00110-00*	CHUCK-ASS'Y NO (2)+(32)+(17)+(7)+(4)
1	ADCD-00110-001	BASE-MAIN ; ABS BLACK
5	ADCD-00110-005	GEAR(A) ; WHT
6	ADCD-00110-006	GEAR(B) ; POM BLK
11	ADCD-00110-011	TRAY ; ABS BLK
12	ADCD-00110-012	BELT
19	ADCD-00110-019	RUBBER-CD SI WHT45
23	ADCD-00110-023	SCREW ; TAP 3×8(WASHER) 17154-100-640
26	ADCD-00110-026	SHAFT-CD ; FE FZY
27	ADCD-00110-027	SPRING-CAM STSWP10.2
28	ADCD-00110-028	SWITCH-LEAF ; MLS-1
29	ADCD-00110-029	MOTOR ; RF-500TB-12560
30	ADCD-00110-030	SWITCH-MICRO LSPPB11
31	ADCD-00111-031	DECK-CD ; CMS-A30A

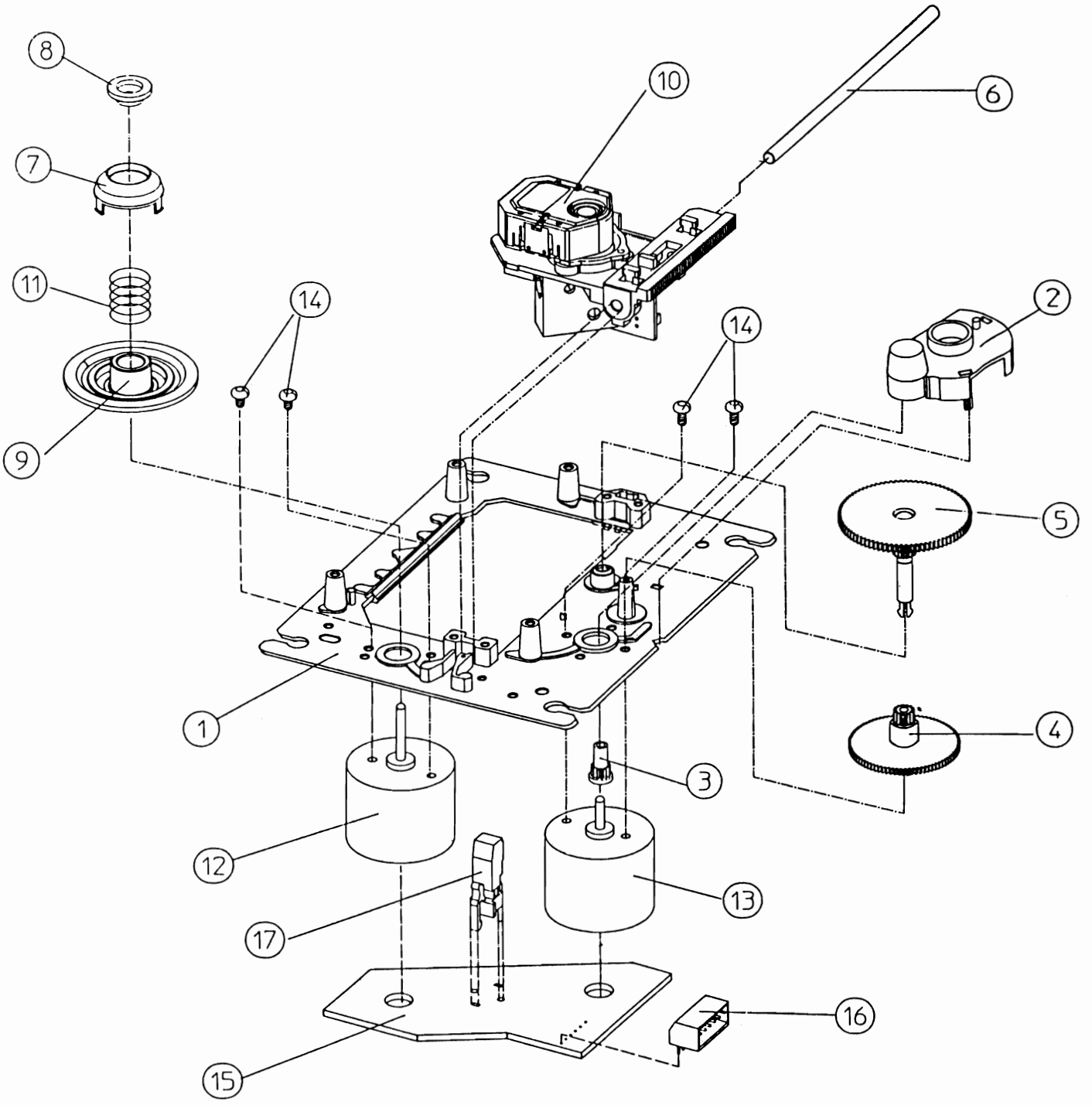

CD MECHA CMS-A30A

Ref. No.	Part No.	Description			
1	ADCD-00110-101	CHASSIS-DECK(M)	8	ADCD-00110-108	CENTER KNOB
2	ADCD-00110-102	COVER-GEAR	9	ADCD-00110-109	T/TABLE
3	ADCD-00110-103	GEAR(A)	10	ADCD-00111-110	LASER PICK-UP
4	ADCD-00110-104	GEAR(B)	11	ADCD-00110-111	SPRING-T/TABLE
5	ADCD-00110-105	GEAR(C)	12	ADCD-00110-112	MOTOR-SPINDLE
6	ADCD-00110-106	SHAFT-P/U	13	ADCD-00110-113	MOTOR-FEED
7	ADCD-00110-107	CENTER RING	14	ADCD-00110-114	SCREW-PH
			17	ADCD-00110-117	SWITCH-LEAF

4. REMOTE P.C BOARD (A4E-213)

Ref. No.	Part No.	Description
LED1	DPIR-00021-005	DOT-IR LED KLN105B-B
IC1	ICMP-00961-SE0	IC REMOTE CONTROL KS51810-77
X1	KTRE-00060-004	RESONATOR CSB455E 455KHZ
PCB-REMOTE	PCPE-02130-41B	PCB-PRINTED (CARBON) A4E-213 243×150×1.6t
Q1	TRTC-0016G-SD0	TRANSISTOR N-H FREQ KTC3198-GR TO92

5. ASS'Y-FRONT P.C BOARD (A2U-152A~H)

Ref. No.	Part No.	Description
LD201	DPLT-00452-YC5	DOT-LED AL-151YC YEL R5 N
IC103	ICCM-20360-T90	IC VOLTAGE DETECTOR S80721AN TO-90
IC102	ICHY-00210-SG0	IC REMOTE RECEIV NJH41H380-L UNIT4
IC101	ICMP-01230-SA0	IC UCOMPUTER HD6433813A46F (TCM-9502-05)
P20	KNCH-00450-5BM	CONNECTOR-HOUSING TKC-A05P-C1 2mm 5P MILK
J20	KNCW-00850-5B0	CONNECTOR-WAFER TKC-A05X-B1 2mm 5P BLK
P21	KNCW-00860-NS0	CONNECTOR-WAFER CFF1323-0101 1.25 SIDE BLK
P22	KNCW-00860-VS0	CONNECTOR-WAFER CFF1331-0101 1.25 SIDE BLK
X101	KTAL-00101-003	CRYSTAL KDSIF 32.768KHz-20P
X102	KTRE-00160-060	RESONATOR CST6.00MGW 6.00MHz
PC-FRONT	PCSU-01520-21B	PCB-SINGLE A2U-152 330×247×1.6t
R151 R152	RMOE-H391J-020	RESISTOR-METAL OXIDE 1W ERG(X)1SJ391E 390ohm T
JK101	SKPH-00350-360	SOCKET-PHONE LGY6501-06
JK102	SKPH-00360-360	SOCKET-PHONE HTJ035-10A
SW101 SW102	SWPU-00301-038	SWITCH-PUSH 00220014 1K(2C2P)
S101 S118	SWTA-00220-060	SWITCH-TACT SKHV10910(A) 12V 50mA
Q218 Q219	TRTA-0009Y-SD0	TRANSISTOR P-H FREQ KTA1271-Y TO92
Q102	TRTC-0016G-SD0	TRANSISTOR N-H FREQ KTC3198-GR TO92
Q220 Q221	TRTC-01060-SD0	TRANSISTOR N-H FREQ KTC3203 TO92
Q223 Q224	TRTD-00200-SD0	TRANSISTOR N-L FREQ KTD-1302 TO92

6. ASS'Y-MAIN P.C BOARD (A1U-309A~D)

Ref. No.	Part No.	Description
CF203	BTCE-00050-004	FILTER-CERAMIC SFU 450B
CF201 CF202	BTCE-00060-107	FILTER-CERAMIC[E, B, V_2, S, A, U, Y] SFE 10.7MS3G-A
	BTCE-00152-107	FILTER-CERAMIC [V_1] SFE 10.7MJA10H-A
CF204	BTCE-00311-004	FILTER-CERAMIC CSB456F18
C222	CFST-O221J-CJ0	CAPACITOR F/STYROL 220PF J 125V 5.5×12 T
C402 C404	CFST-O331J-CJ0	CAPACITOR F/STYROL 330PF J 125V 5.5×12 T
C219 C455 C456	CFST-O471J-CJ0	CAPACITOR F/STYROL 470PF J 125V 5.5×12 T
C372 C373	CFST-O911J-CJ0	CAPACITOR F/STYROL 910PF J 125V 5.5×12 T
D207 D208 D209 D210	DDSV-0003B-S30	DIODE-VVC 1SV149B AM 8V DIP2 S
D211	DDTZ-G051B-SO0	DIODE ZENER MTZ5.1B 4.94-5.2 DO40 T
D301 D302	DDTZ-G082C-SO0	DIODE ZENER MTZ8.2C 8.03-8.45 DO40 T
D217	DDTZ-G091B-SO0	DIODE ZENER MTZ9.1B 9.01 DO40 T
LP101 LP102 LP103	DPLA-00160-00B	LAMP SL422-012110PP 110mA 12V
LCD101	DPLC-00270-00Z	DISPLAY-LCD OEL-7613-506R022A
IC406	ICCM-00020-SQ0	IC QUAD NAND GATE GD4011B DIP14
IC303	ICCM-00170-SQ0	IC 4CH MUX/DEMUX GD4052B DIP16
IC202	ICCM-20380-S10	IC PLL LC7218 DIP24S
IC306	ICCM-20390-SG0	IC ELECTRONIC VOLUME NJU7305 SDIP28
IC405	ICDG-00370-S20	IC TAPE SELECTOR μPC1330HA SIP9
IC401	ICLN-00540-SO0	IC 2CH PRE AMP BA3416BL DIP16
IC402	ICLN-00681-SA0	IC DOLBY B HA12136A DIP16
IC304 IC305	ICLN-01550-S50	IC 7BAND EQ AN7337N DIP20
IC201	ICLN-01640-S10	IC AM/FM IF MPX LA1851N DIP30
IC302 IC312 IC404	ICOP-00131-SE0	IC DUAL OP AMP KA4558C DIP8
IC403	ICRG-00240-SE0	IC REGULATOR MC78L05 5V TO-92
T206	IFFD-00140-E60	IFT-FM DET AFD014 7.4mm-CAN
T205	KIAA-00140-ED0	COIL-AM IFT AAA-014B
T203	KIAO-00240-E20	COIL-AM OSC AAO024 MW 7mm-CAN
T204	KIAO-00250-E20	COIL-AM OSC [E, V, B] AAO025 LW 7mm-CAN
	KIAO-00260-E20	COIL-AM OSC [U, Y] AAO026 7mm-CAN

Ref. No.	Part No.	Description
T202	KIAT-00301-E20	COIL-AM ANT [E, V, B]
		AAT030-1 LW 10mm-CAN
	KIAT-00370-E20	COIL-AM ANT [U, Y]
		AAT037 SW 10mm-CAN
T201	KIAT-00351-E20	COIL-AM ANT
		AAT035-1 MW 10mm-CAN
T207	KIML-A0020-E20	COIL-FM MPX FILTER
		AFL-002 114KHz 7mm-CAN
T208	KIML-A0010-E60	COIL-FM MPX FILTER
T209		AMA-001A 19KHz 10mm-CAN
L402	KIRK-00200-E50	COIL-REC CHOCK
L404		ARK-020 3.9mH MOLD SHIELD
L401	KIRK-00210-E50	COIL-REC CHOCK
L403		ARK-021 8.2mH MOLD SHIELD
T403	KIRO-00140-E60	COIL-REC OSC
		ARO014 85KHz 10mm-CAN
T401	KIRP-00050-E60	COIL-REC TRAP
T402		ARP005A 100KHz 7mm-C
T404		
T405		
X201	KTAL-00041-072	CRYSTAL
		HC-49/U 7.200000MHz
PCB-MAIN	PCSU-03090-11B	PCB-SINGLE
		A1U-309 330×247×1.6t
JK301	SKRC-00290-020	SOCKET-RCA
		JK0200440N 2P
Q226	TRTK-0001G-S30	FET N-CHANNEL
		2SK246-GR TO92
Q206	TRTA-0008G-SD0	TRANSISTOR P-H FREQ
Q207		KTA1266-GR TO92
Q208		
Q455		
Q456		
Q430	TRTC-0008Y-SD0	TRANSISTOR N-H FREQ
		KTC2120-Y TO92
Q201	TRTC-0010Y-SD0	TRANSISTOR N-H FREQ
		KTC1923-Y TO92
Q204	TRTC-0016G-SD0	TRANSISTOR N-H FREQ
Q205		KTC3198-GR TO92
Q225		
Q216	TRTC-0039Y-SD0	TRANSISTOR N-H FREQ
Q429		KTC3205-Y TO92L
Q202	TRTC-0094Y-SD0	TRANSISTOR N-H FREQ
Q203		KTC3199-Y TO92M
Q401		
Q402		
Q403		
Q404		
Q419		
Q420		
Q421		
Q422		
Q423		
Q424		
Q425		
Q451		
Q452		
Q209	TRTD-00200-SD0	TRANSISTOR N-L FREQ
Q210		KTD-1302 TO92
Q213		
Q417		
Q418		
Q432		
Q433		
FE201	TUFF-00150-00I	FRONT-END
		FE340-A01 12V
SV401	VFEB-A001B-103	RESISTOR-SEMI FIXED
SV402		EVN DXA A03 B14 10Kohm
SV407	VFEB-A001B-104	RESISTOR-SEMI FIXED
SV408		EVN DXA A03 B15 100Kohm
SV202	VFEB-A001B-223	RESISTOR-SEMI FIXED
SV405		EVN DXA A03 BE4 22Kohm
SV406		
SV201	VFEB-A001B-472	RESISTOR-SEMI FIXED
SV203		EVN DXA A03 BQ3 4.7Kohm

7. ASS'Y-AMP P.C BOARD (A2U-151A~C)

Ref. No.	Part No.	Description
L903	* BTAL-00010-025	FILTER-AC LINE
		FKOB160MH02 2A
D907	DDTZ-G130B-SO0	DIODE ZENER
		MTZ13B 12.55-13.21 DO40 T
D911	DD4B-00240-T10	DIODE-BRIDGE
		BL4-06 250V 3A BRIDGE
IC901	ICHP-00090-S10	IC HYBRID AMP-POWER
		STK4132 Ⅱ 20W×2 SIP18
IC908	ICRG-00043-SE0	IC REGULATOR
		KA7805 5V 3mm TO-220
IC906	ICRG-00218-SE0	IC REGULATOR
		KA7812 12V 3mm TO-220
IC907	ICRG-00240-SE0	IC REGULATOR
		MC78L05 5V TO-92
IC902	ICRG-00310-SD0	IC REGULATOR
IC904		KIA78L12 TO-92
IC905	ICRG-00330-SG0	IC REGULATOR
		NJM7909FA −9V 2.2A TO-220
IC903	ICRG-00440-SG0	IC REGULATOR
		NJM7912FA TO-220
L901	KIBK-00050-E40	COIL-AUDIO CHOCK
L902		ABK005 2.2μH
PCB-AMP	PCSU-01510-25B	PCB-SINGLE
		A2U-151 330×197×1.6t
R918	RCMS-JR22K-410	RESISTOR-CEMENT
R927		0.22ohm 2W 10% S
FR902	* RFUE-F470J-010	RESISTOR-FUSIBLE
		47ohm 1/4W ERQ14AJ470E T
FR901	* RFUE-F560J-010	RESISTOR-FUSIBLE
		56ohm 1/4W ERQ14AJ560E T
FR903	* RFUM-F1R0J-120	RESISTOR-FUSIBLE
FR904		1.0ohm 1/4W 5% M
FR905		
FR907	* RFUM-G1R0J-130	RESISTOR-FUSIBLE
FR908		1ohm 1/2W 5% M
FR906	* RFUZ-A2R2K-001	RESISTOR-FUSIBLE
		2.2ohm 1/6W K ERQ16NK2R2E
Q917	TRSA-0023Y-SD0	TRANSISTOR P-H FREQ
		KTA1658-Y TO220IS
Q911	TRSD-0008Y-SD0	TRANSISTOR N-L FREQ
Q920		KTD2058-Y TO220AB
Q903	TRTA-0008G-SD0	TRANSISTOR P-H FREQ
Q904		KTA1266-GR TO92
Q912		
Q916		

Ref. No.	Part No.	Description
Q922		
Q919	TRTA-0009Y-SD0	TRANSISTOR P-H FREQ KTA1271-Y TO92
Q907	TRTA-0056T-SOS	TRANSISTOR P-H FREQ DTA114T-S W/RESIST TO92M
Q906	TRTC-0034Y-SOS	TRANSISTOR N-H FREQ DTC114Y-S TO92
Q923	TRTC-0060E-SOS	TRANSISTOR N-H FREQ DTC144E-S TO92M
Q905	TRTD-00200-SD0	TRANSISTOR N-L FREQ KTD-1302 TO92
SV902	VFEB-A001B-102	RESISTOR-SEMI FIXED EVN DXA A03 B13 1Kohm
SV901	VFEB-A001B-222	RESISTOR-SEMI FIXED EVN DXA A03 BE3 2.2Kohm

8. ASS'Y-CD P.C BOARD (A2U-154)

Ref. No.	Part No.	Description
D602	DDTZ-G056B-SO0	DIODE ZENER MTZ5.6B 5.45-5.73 DO40 T
D607	DDTZ-G062B-SO0	DIODE ZENER MTZ6.2B 5.96-6.27 DO40 T
IC606	ICDG-00340-SO0	IC MOTOR DRIVER BA6209 DIP10H
IC602	ICDG-00940-SE0	IC D.S.P+D.A.C (CDP) KS-9282B QFP80
IC601	ICDG-00950-SE0	IC RF+SERVO (CDP) KA-9220B QFP80
IC603	ICLN-01590-SE0	IC MOTOR CONTROL CDP KA-9258D HSOP28
IC604	ICOP-00130-SE0	IC DUAL OP AMP
IC605		KA4558S SIP9
PCB-CDP	PCSU-01540-21B	PCB-SINGLE A2U-154 247×247×1.6t
Q602	TRSA-0023Y-SD0	TRANSISTOR P-H FREQ
Q614		KTA1658-Y TO220IS
Q601	TRTA-0008G-SD0	TRANSISTOR P-H FREQ
Q604		KTA1266-GR TO92
Q606	TRTA-0042E-SOS	TRANSISTOR P-H FREQ
Q610		DTA124E-S TO92M
Q603	TRTC-0016G-SD0	TRANSISTOR N-H FREQ KTC3198-GR TO92
Q608	TRTC-0016Y-SD0	TRANSISTOR N-H FREQ
Q609		KTC3198-Y TO92
Q605	TRTC-0034Y-SOS	TRANSISTOR N-H FREQ
Q607		DTC114Y-S TO92
Q611		
Q615		
Q612	TRTD-00200-SD0	TRANSISTOR N-L FREQ
Q613		KTD-1302 TO92
SV601	VFEB-A001B-223	RESISTOR-SEMI FIXED
SV602		EVN DXA A03 BE4 22Kohm
SV603		
SV604		

9. ASS'Y-VTG SELECTOR P.C BOARD (A4G-221)

Ref. No.	Part No.	Description
PCB-VTG	PCSG-02210-45B	PCB-SINGLE A4G-221

10. FINAL ASSEMBLY

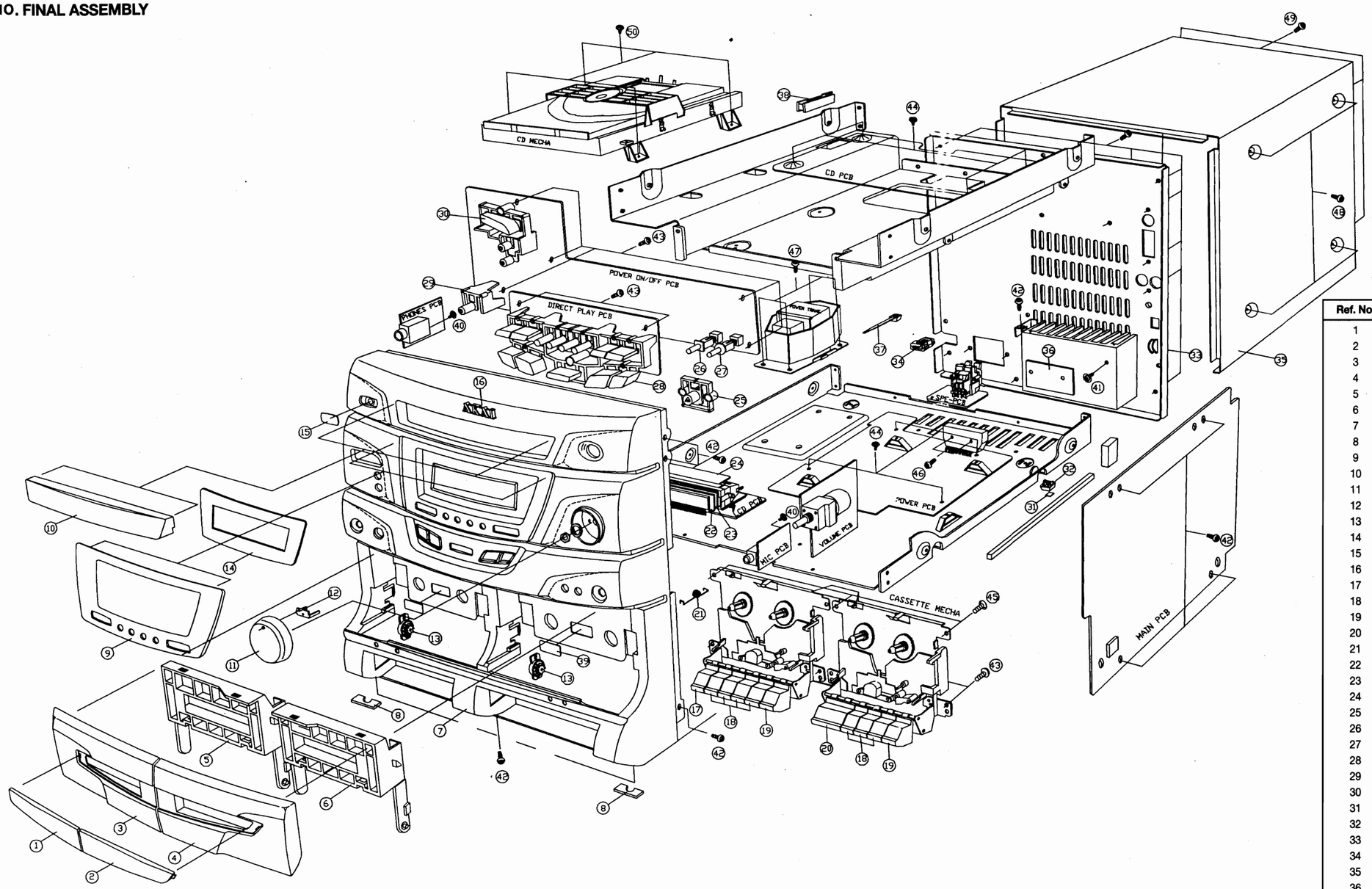

Ref. No.	Part No.	Description
1	MJAF-05370-ZZ3	WINDOW-DOOR-L
2	MJAF-05380-ZZ3	WINDOW-DOOR-R
3	MJAF-02400-ZZ2	CAP-DOOR-L
4	MJAF-02410-ZZ2	CAP-DOOR-R
5	MJAF-002420-002	FRAME-DOOR-L
6	MJAF-002421-002	FRAME-DOOR-R
7	MJAF-03630-ZZ1	PANEL-FRONT
8	MRAG-10810-004	CUSHION-FOOT
9	MJAF-05230-ZZ3	WINDOW-LCD
10	MJAF-05250-ZZ3	DOOR-CDP
11	MJAF-12230-ZZ4	KNOB-VOLUME
12	MJAF-12260-ZZ4	LENS-VOLUME
13	MJAG- 08110-004	DAMPER-GEAR
14	MAAF-12390-ZZ4	PLATE-LCD
15	MAAF-12350-ZZA	PLATE-REMOTE
16	MJAF-12580-ZZ4	BADGE-AKAI
17	MJAF-12180-ZZ4	KNOB-DECK-REC
18	MJAF-12200-ZZ4	KNOB-DECK-REW
19	MJAF-12170-ZZ4	KNOB-DECK-PAUSE
20	MJAF-12190-ZZ4	KNOB-DECK-PLAY(A)
21	MMAC-13360-004	SPRING-DECK-DOOR
22	MAAF-12670-ZZ4	FILTER-LCD-F
23	MAAF-12360-ZZ4	FILTER-LCD
24	MJAG-00290-002	GUIDE-LCD
25	MJAF-12220-ZZ4	KNOB-OP/CL
26	MJAF-12240-ZZ4	KNOB-DOLBY
27	MJAF-12250-ZZ4	KNOB-DUBBING
28	MJAF-05240-ZZ3	KNOB-FUNCTION
29	MJAF-12210-ZZ4	KNOB-CHARACTOR
30	MJAF-05260-ZZ3	KNOB-POWER
31	MRAG-10150-004	CUSHION-FOOT-B
32	MJAG-10140-004	FOOT-B
33	MPAC-03430-ZZ2	CHASSIS-BACK
34	MJAG-00281-003	BUSH-CORD
35	MPAC-03690-ZZ1	CHASSIS-TOP
36	MRAG-07450-004	RUBBER-IC-L
37	MJAG-04540-004	CABLE-TIE-L80
38	MJAG-09730-004	FLAT-CLAMP
39	MGAF-04940-ZZ4	REFLECTOR-TAPE
40	MMTC-00752-004	SCREW-TAPPING
41	MMTC-12182-004	SCREW-TAPPING
42	XSTB-30080-ZY4	SCREW-TAPPING
43	XSTB-30100-ZY4	SCREW-TAPPING
44	XSTW-30080-ZY4	SCREW-TAPPING
45	XSTF-30100-ZY4	SCREW-TAPPING
46	XSTB-30120-ZY4	SCREW-TAPPING
47	XSTB-40080-ZY8	SCREW-TAPPING
48	XSTB-40080-ZB8	SCREW-TAPPING
49	XSTB-30100-ZB4	SCREW-TAPPING
50	XSTS-30060-ZY8	SCREW-TAPPING

VI. WIRING DIAGRAM

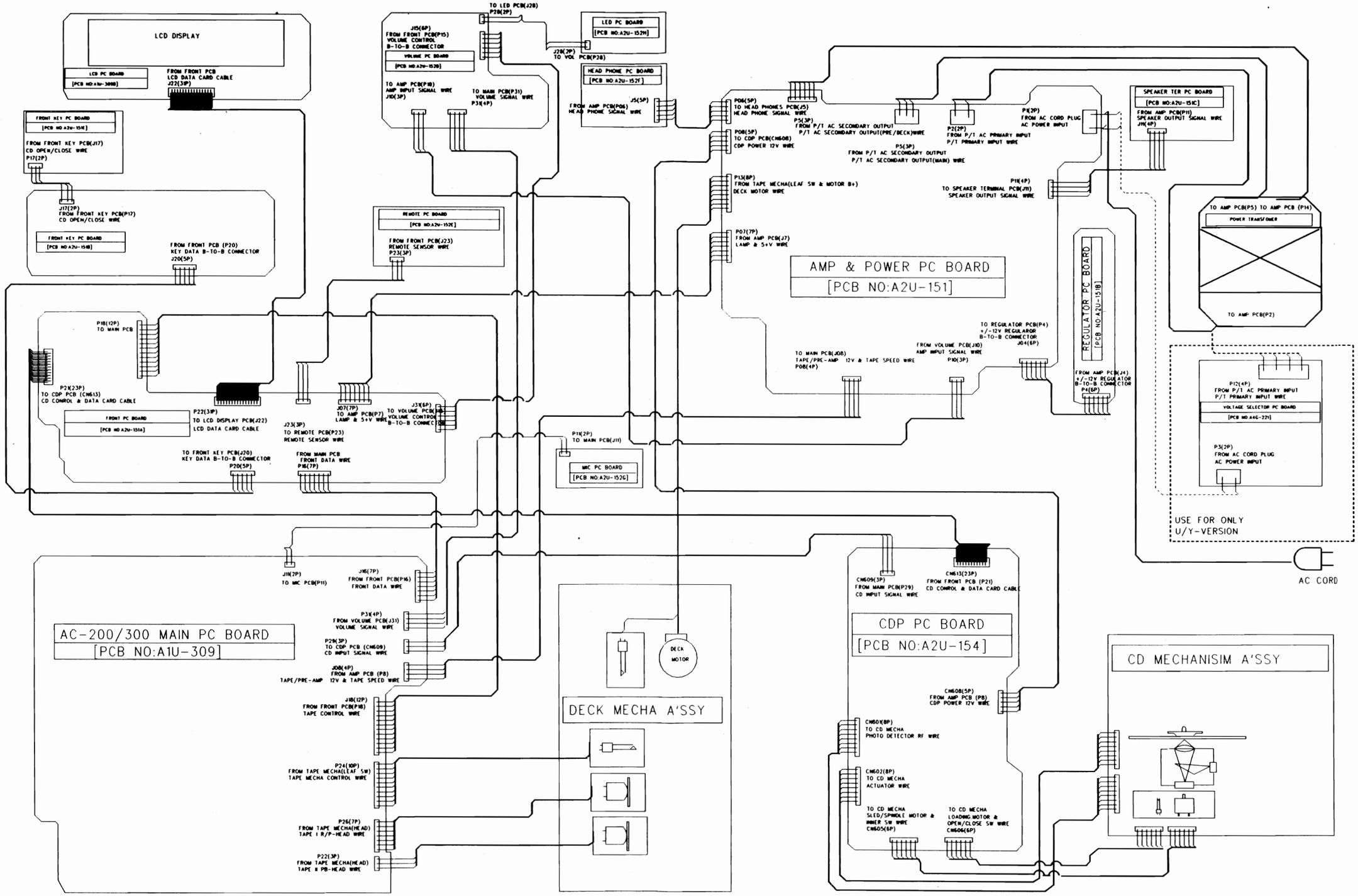

VII. BLOCK DIAGRAM/FRONT

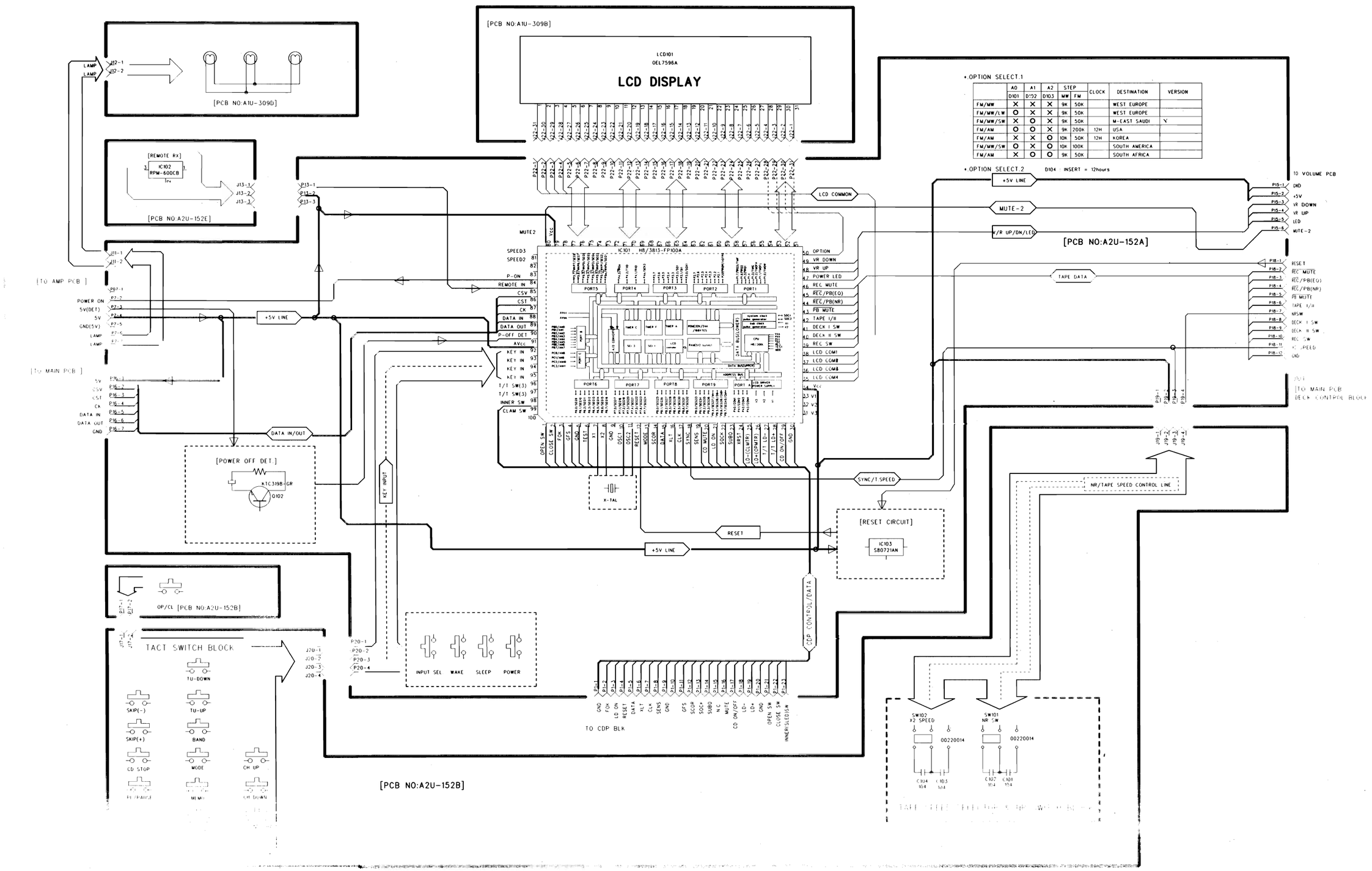

	A0	A1	A2	STEP		CLOCK	DESTINATION	VERSION
	D101	D102	D103	MW	FM			
FM/MW	X	X	X	9K	50K		WEST EUROPE	
FM/MW/LW	O	X	X	9K	50K		WEST EUROPE	
FM/MW/SW	X	O	X	9K	50K		M-EAST SAUDI	Y
FM/AM	O	O	X	9K	200K	12H	USA	
FM/AM	X	X	O	10K	50K	12H	KOREA	
FM/MW/SW	O	X	O	10K	100K		SOUTH AMERICA	
FM/AM	X	O	O	9K	50K		SOUTH AFRICA	

BLOCK DIAGRAM/MAIN

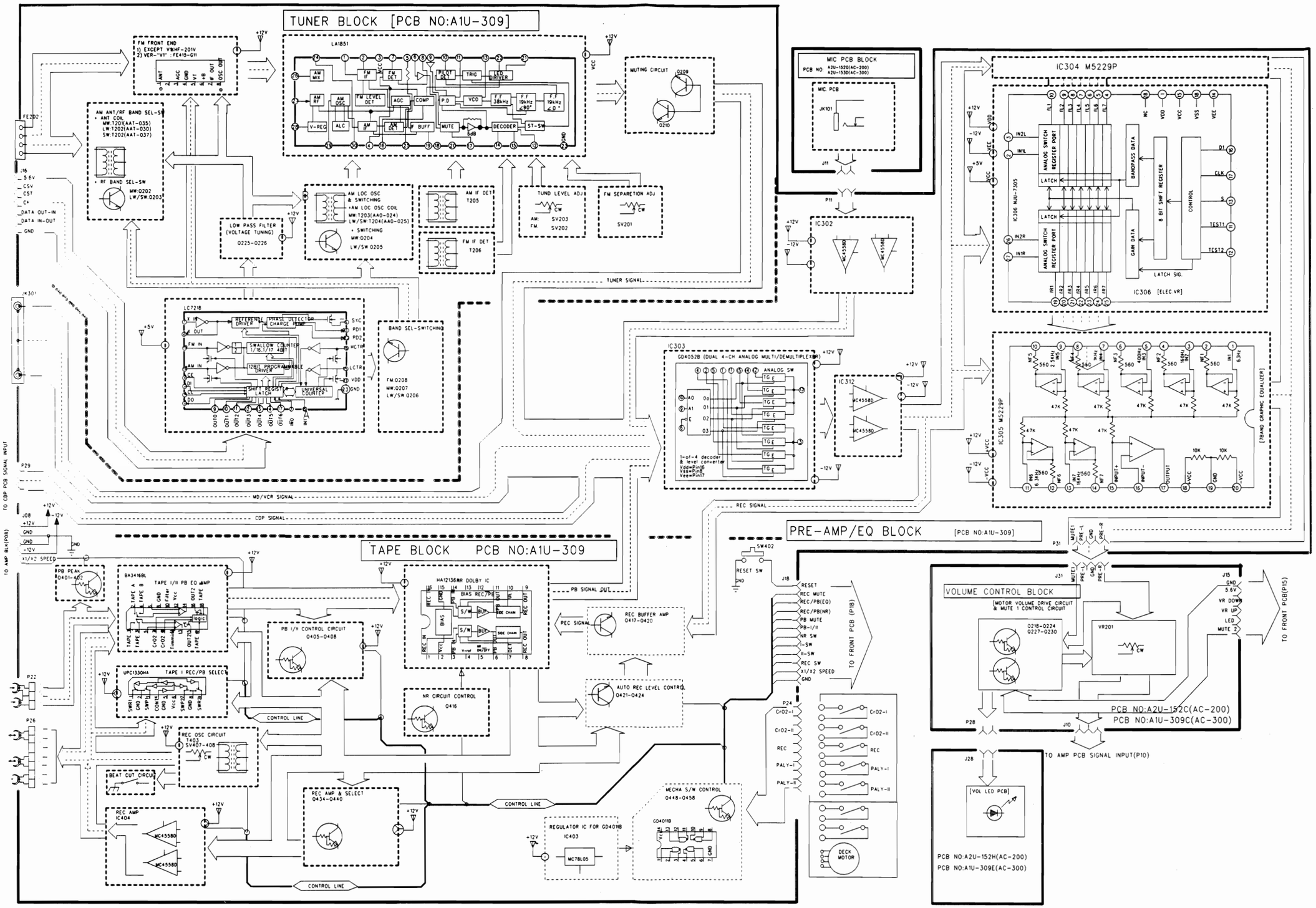

BLOCK DIAGRAM/POWER AMP

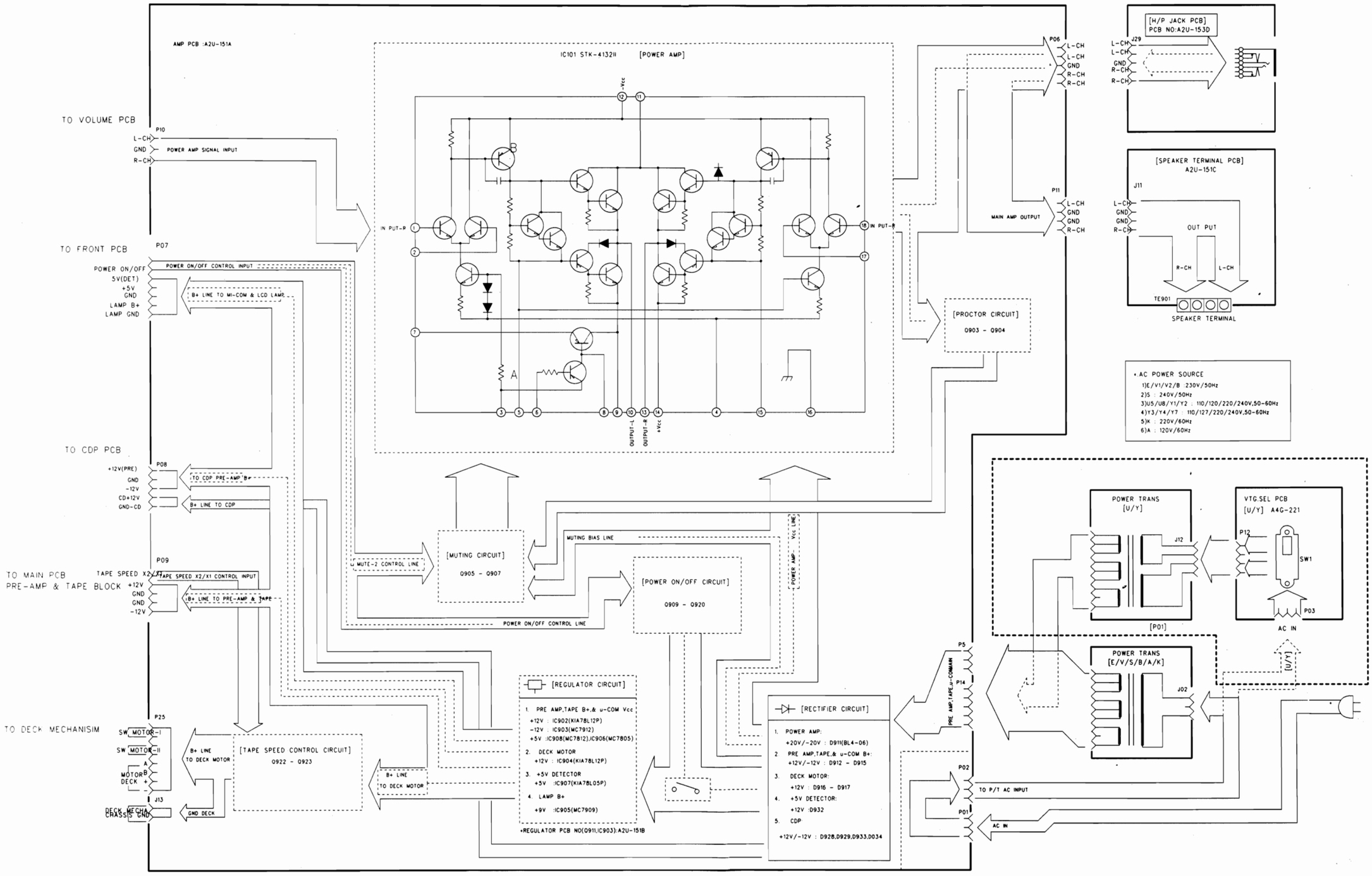

BLOCK DIAGRAM/CD

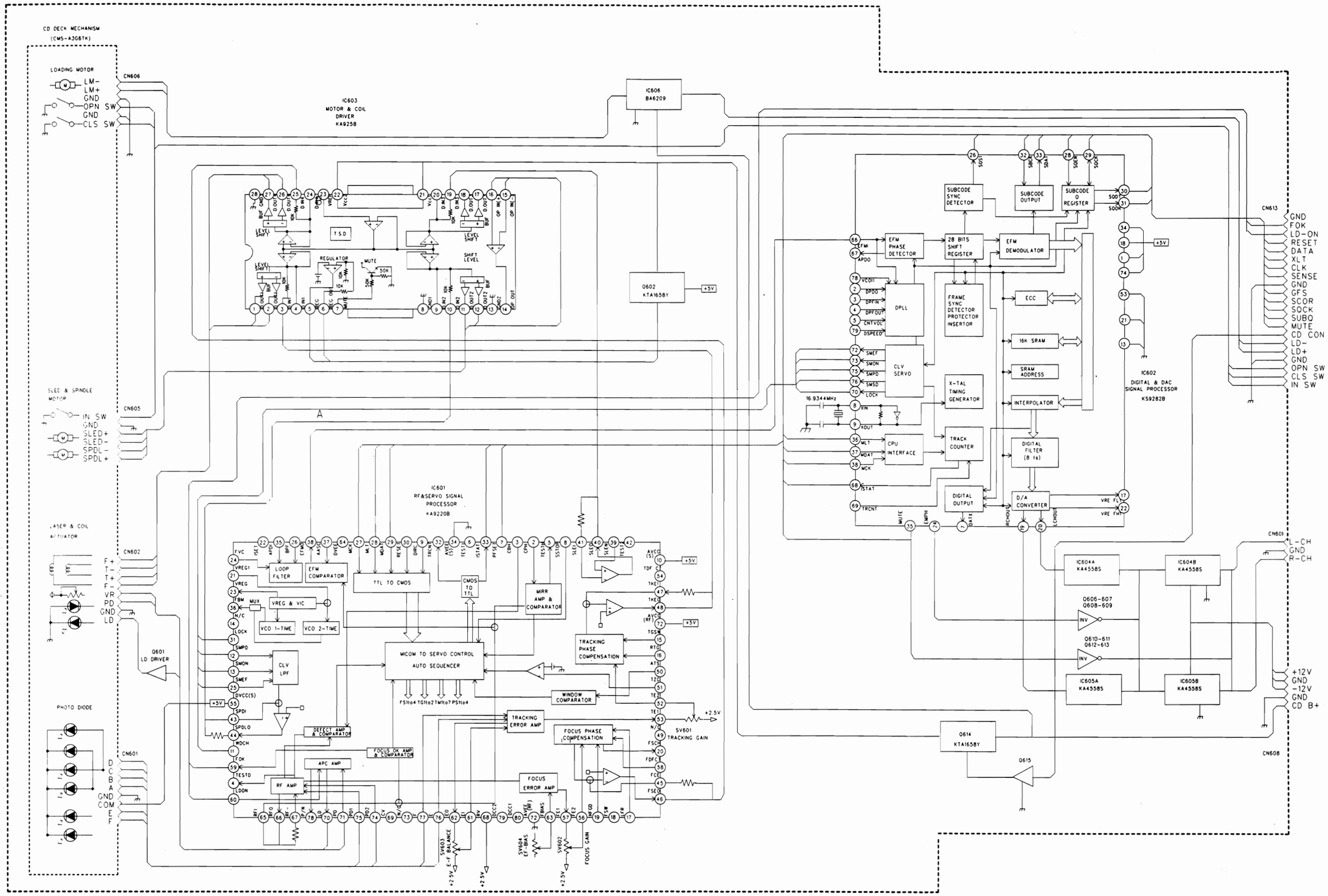

VIII.SCHEMATIC DIAGRAM/FRONT

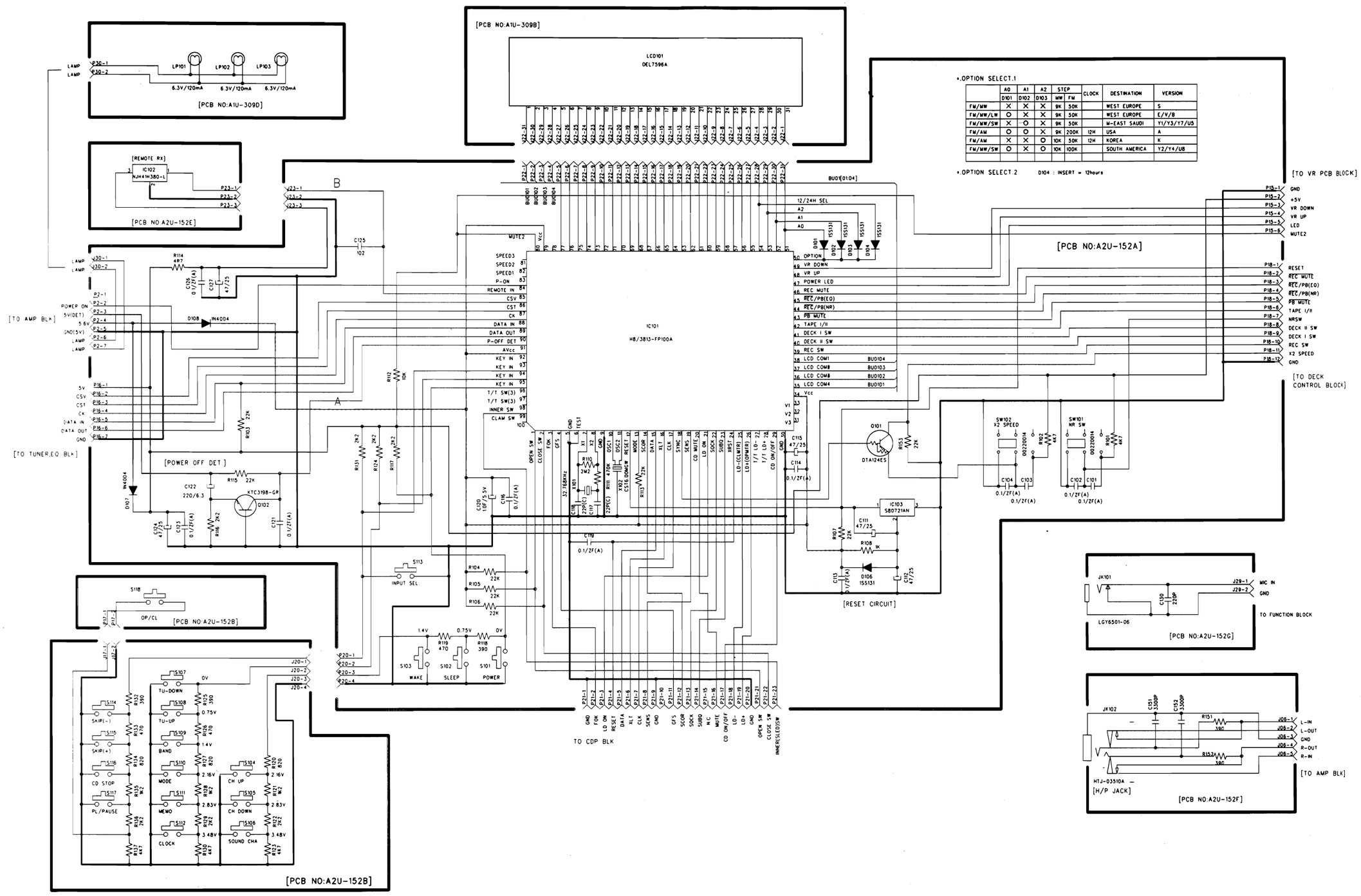

	A0 D101	A1 D102	A2 D103	STEP WW	STEP FM	CLOCK	DESTINATION	VERSION
FM/WW	×	×	×	9K	50K		WEST EUROPE	S
FM/WW/LW	○	×	×	9K	50K		WEST EUROPE	E/V/B
FM/WW/SW	×	○	×	9K	50K		M-EAST SAUDI	Y1/Y3/Y7/U5
FM/AM	○	○	×	9K	200K	12H	USA	A
FM/AM	×	×	○	10K	50K	12H	KOREA	K
FM/WW/SW	○	×	○	10K	100K		SOUTH AMERICA	Y2/Y4/U8

SCHEMATIC DIAGRAM/FUNCTION/G-EQ

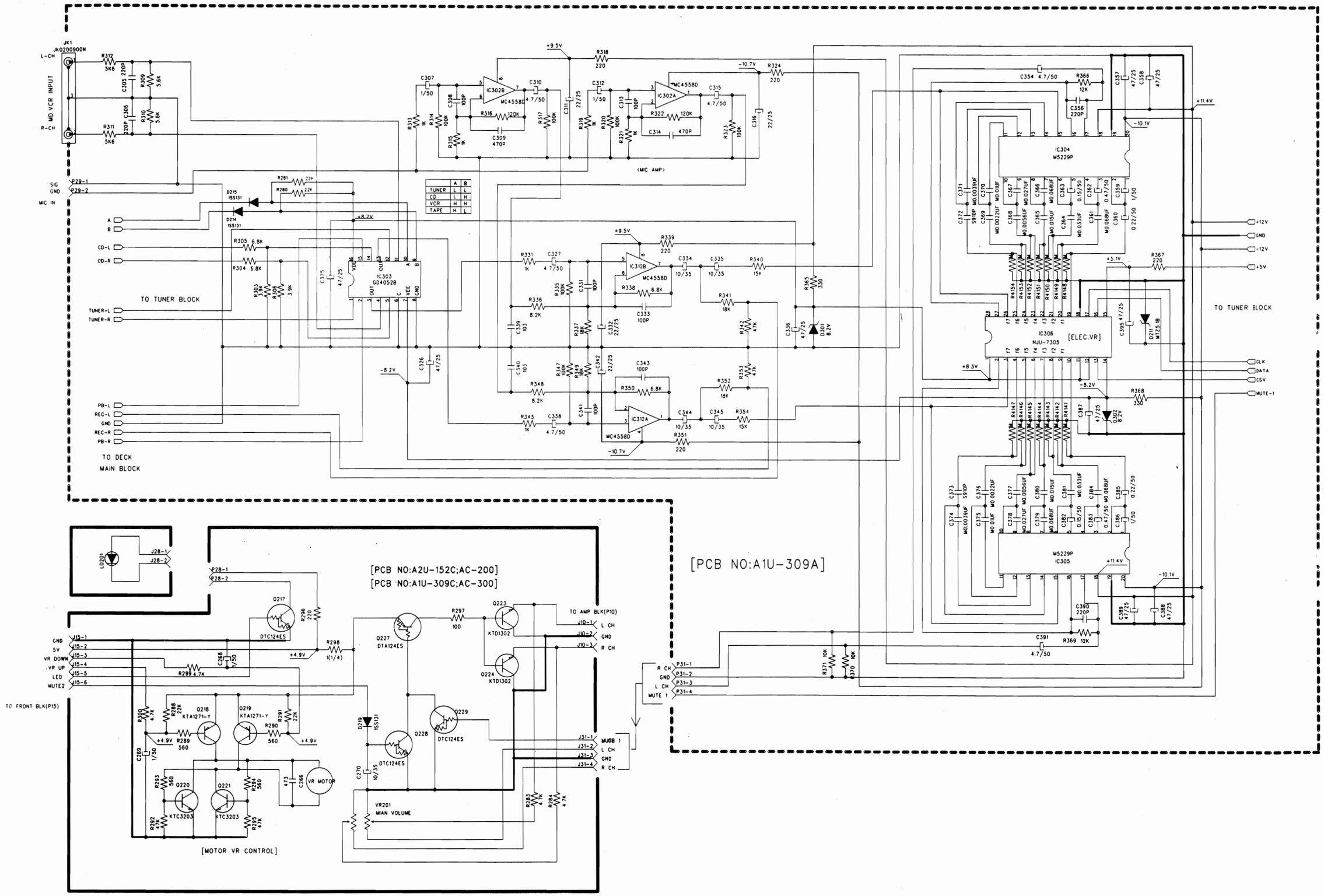

SCHEMATIC DIAGRAM/DECK

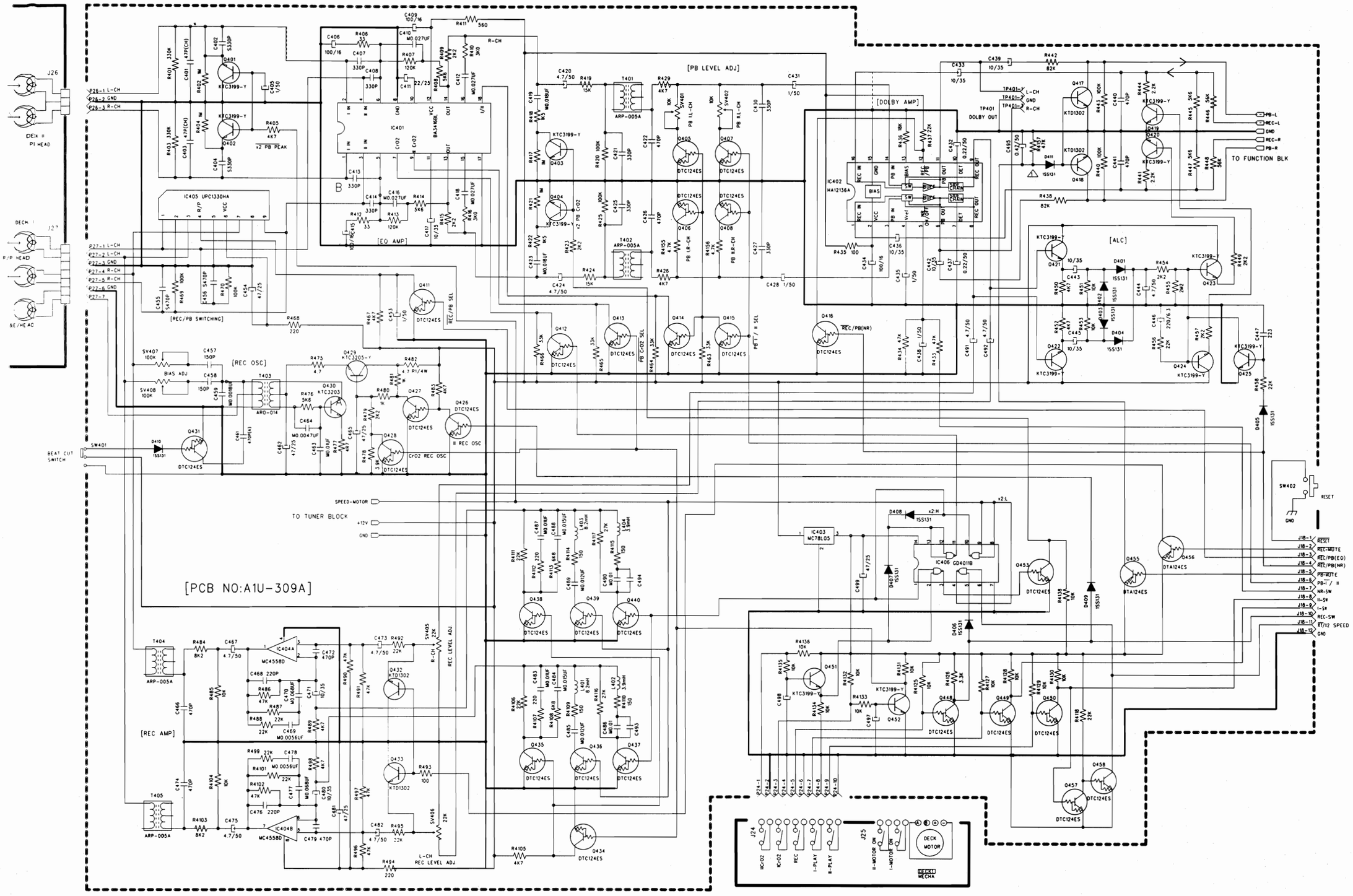

SCHEMATIC DIAGRAM/TUNER(FM, MW, SW BAND)

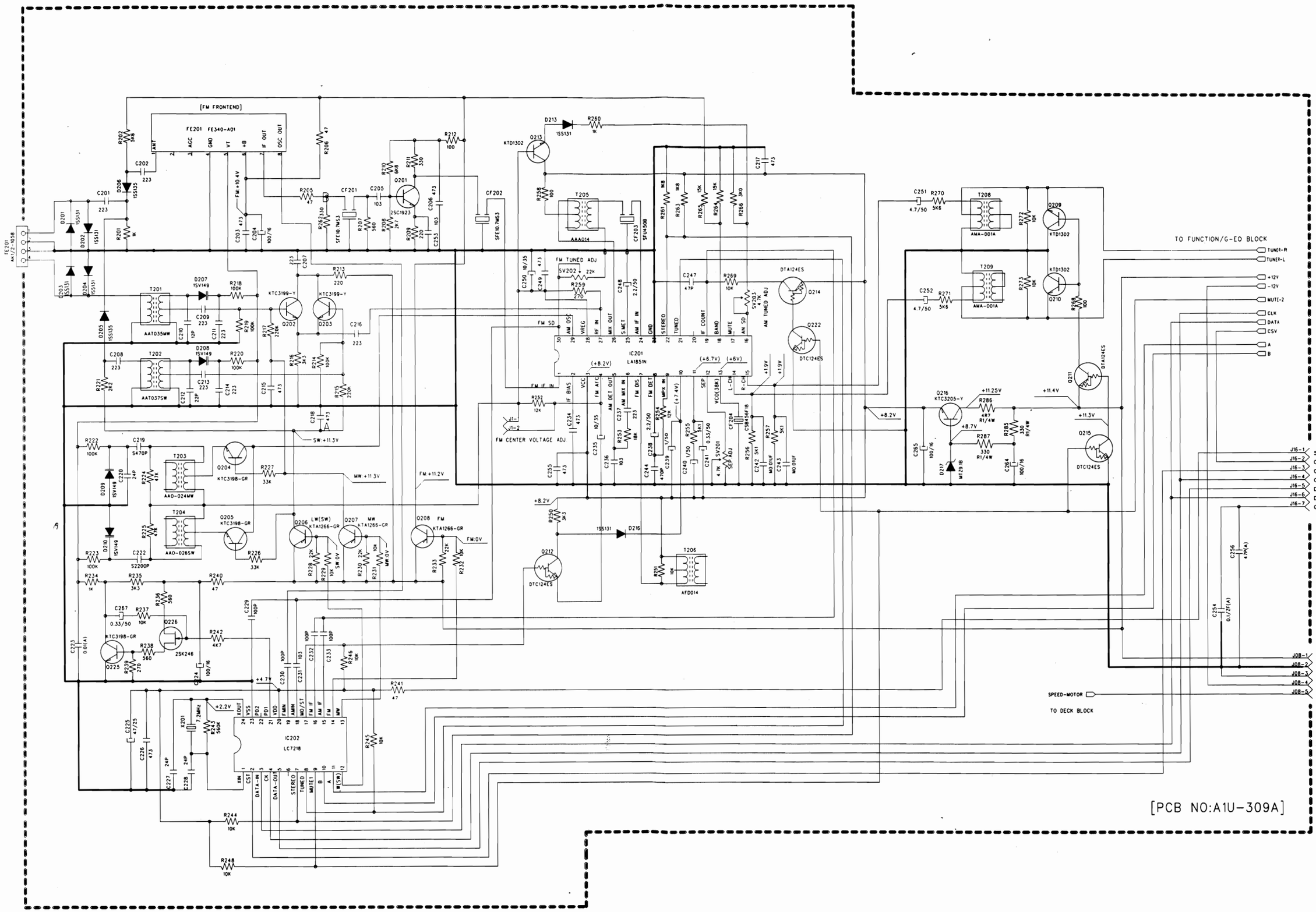

SCHEMATIC DIAGRAM/TUNER(FM, MW, LW BAND)

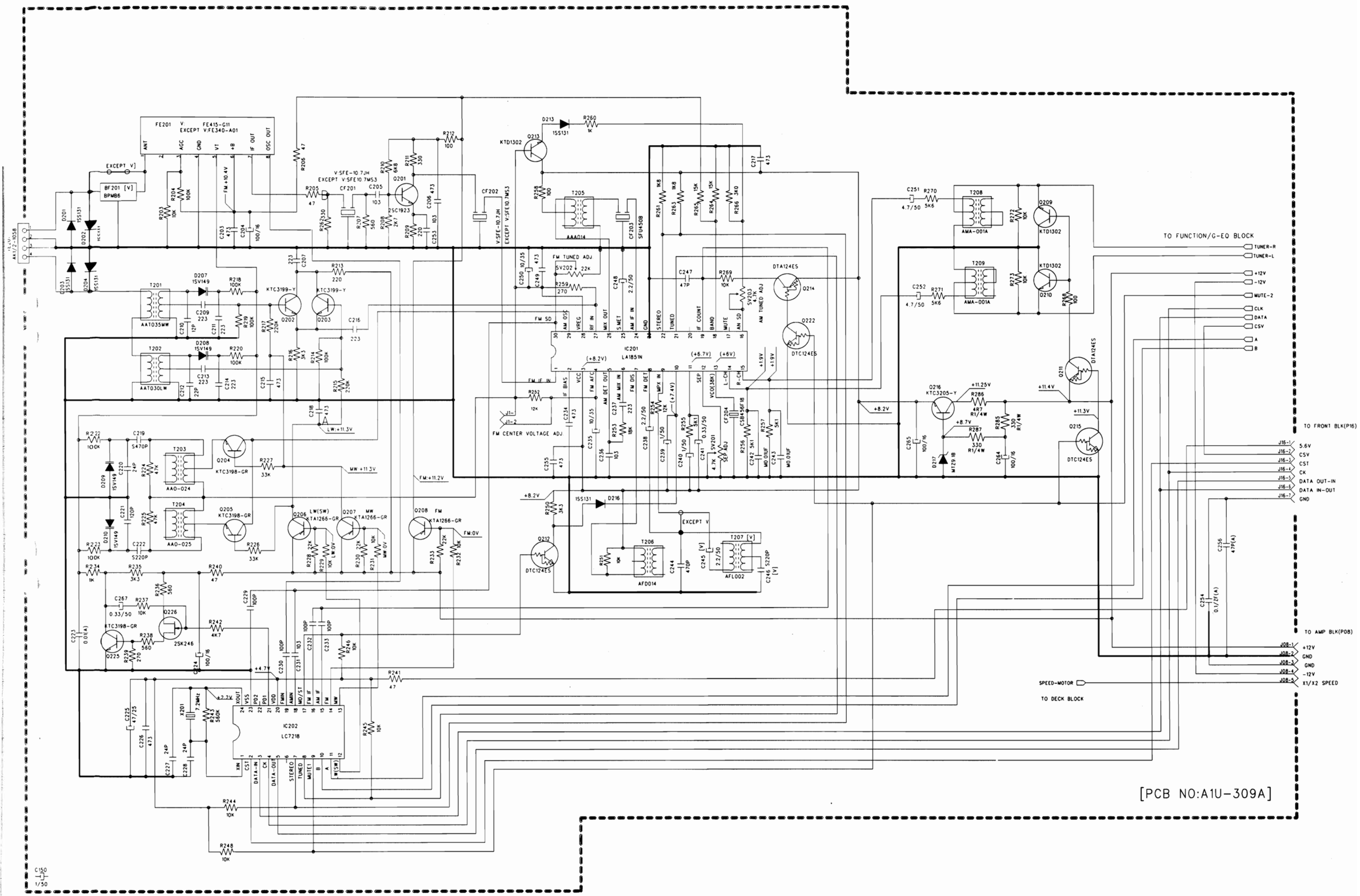

SCHEMATIC DIAGRAM/POWER AMP

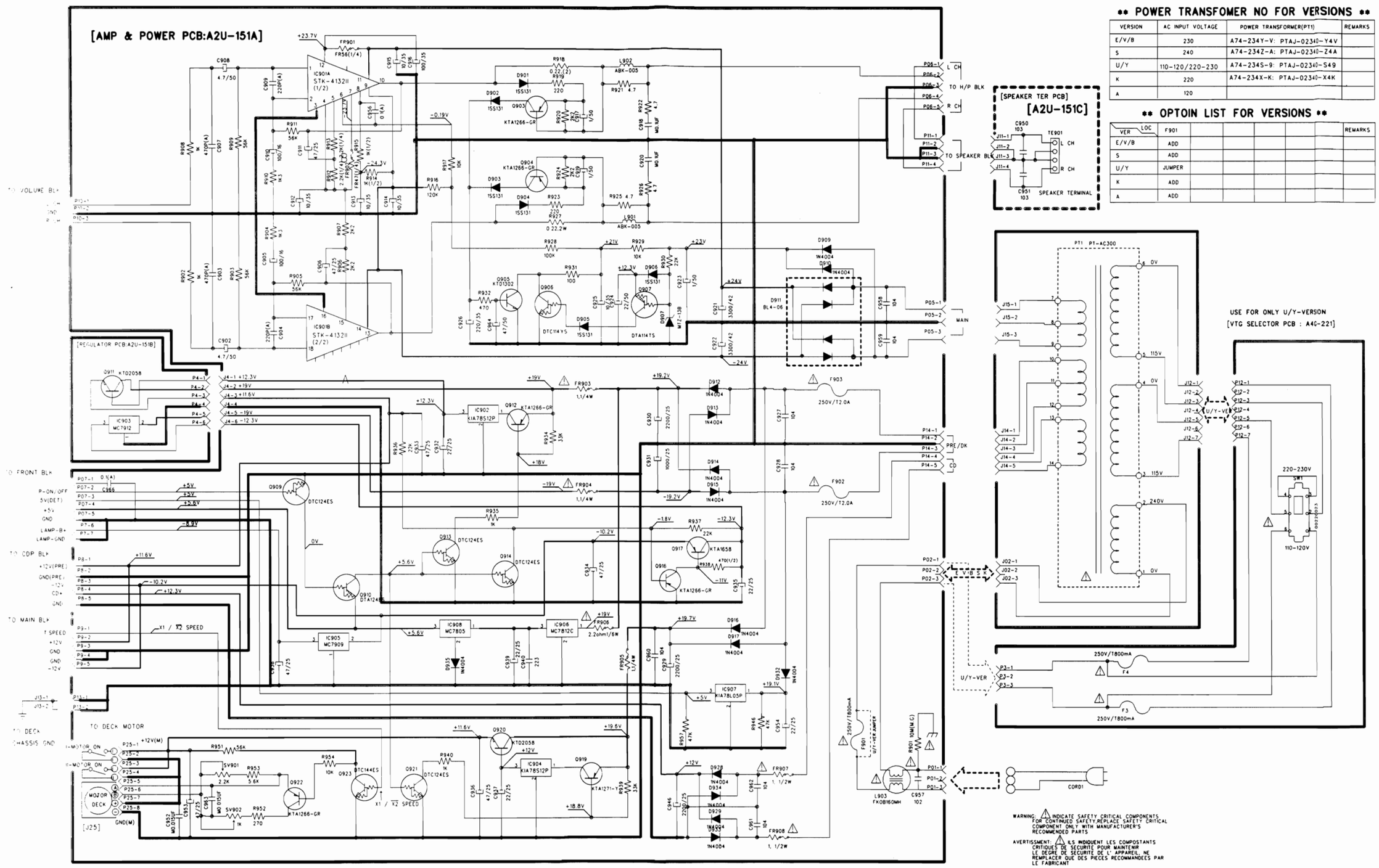

** POWER TRANSFOMER NO FOR VERSIONS **

VERSION	AC INPUT VOLTAGE	POWER TRANSFORMER(PT1)	REMARKS
E/V/B	230	A74-234Y-V: PTAJ-02340-Y4V	
S	240	A74-234Z-A: PTAJ-02340-Z4A	
U/Y	110-120/220-230	A74-234S-9: PTAJ-02340-S49	
K	220	A74-234X-K: PTAJ-02340-X4K	
A	120		

** OPTOIN LIST FOR VERSIONS **

VER \ LOC	F901						REMARKS
E/V/B	ADD						
S	ADD						
U/Y	JUMPER						
K	ADD						
A	ADD						

SCHEMATIC DIAGRAM/CD

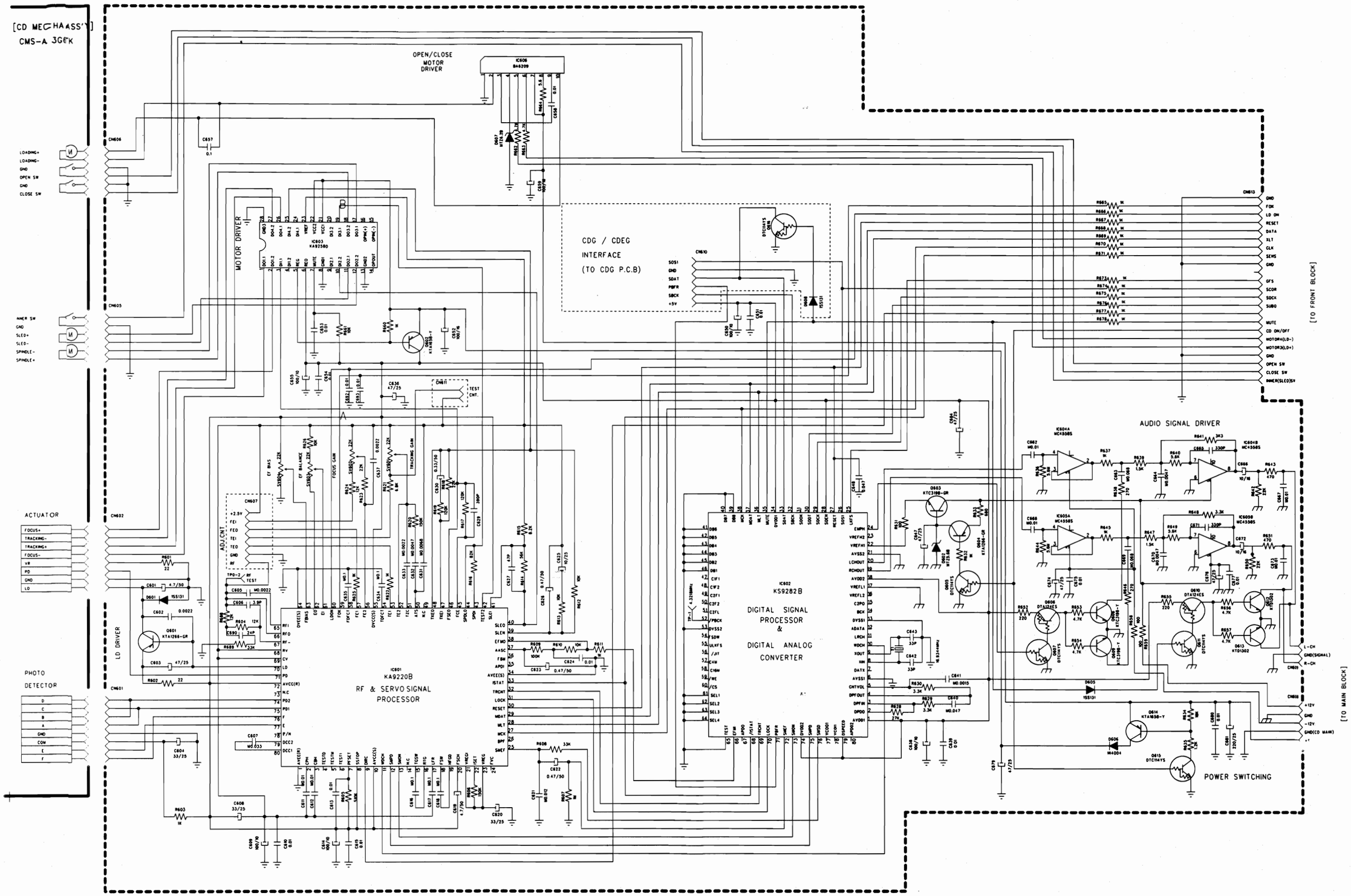

SCHEMATIC DIAGRAM/REMOTE

RC-S200/RC-S300

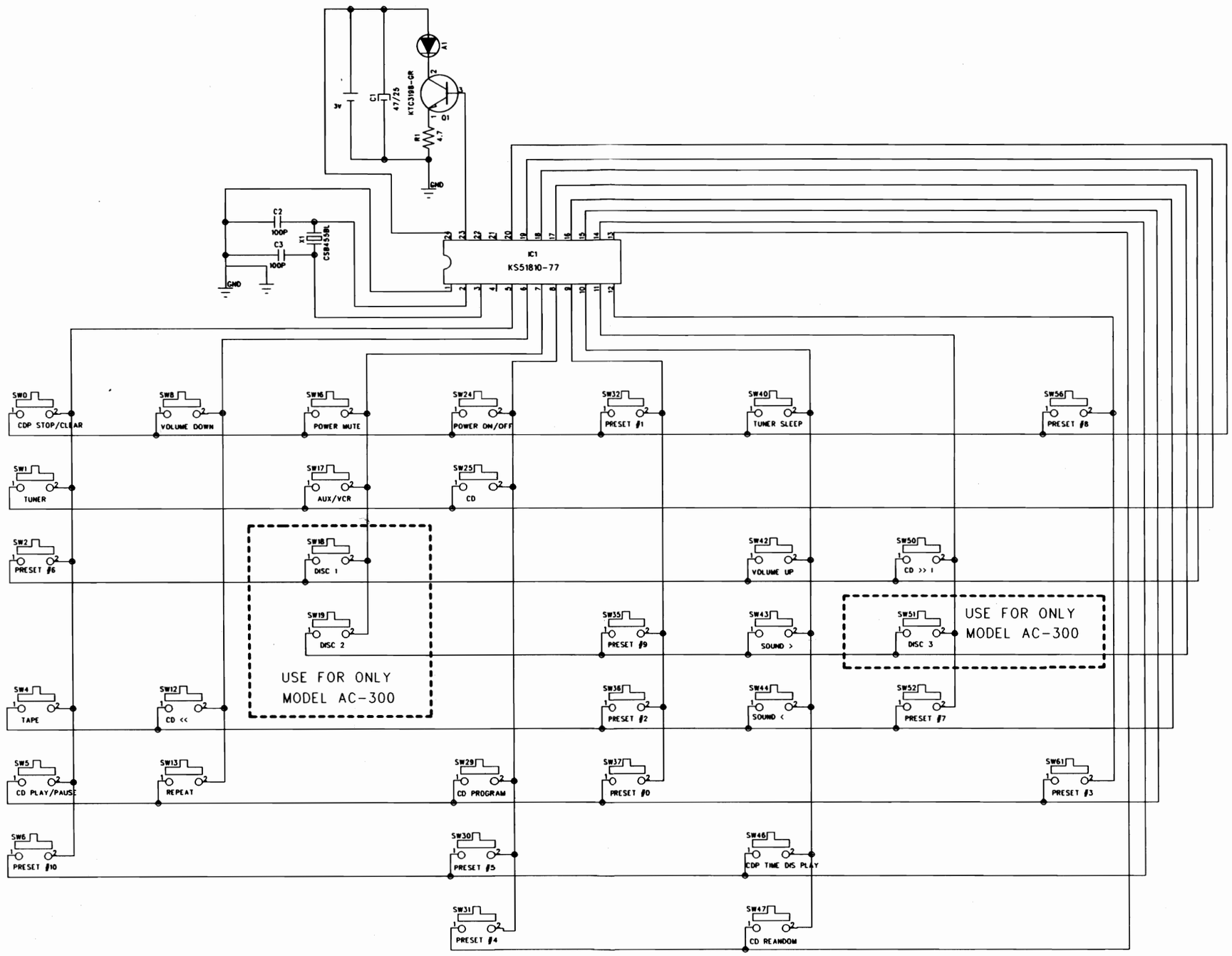

IX. PCB LAYOUT/MAIN

MAIN PCBOARD (A1U-309A~D)

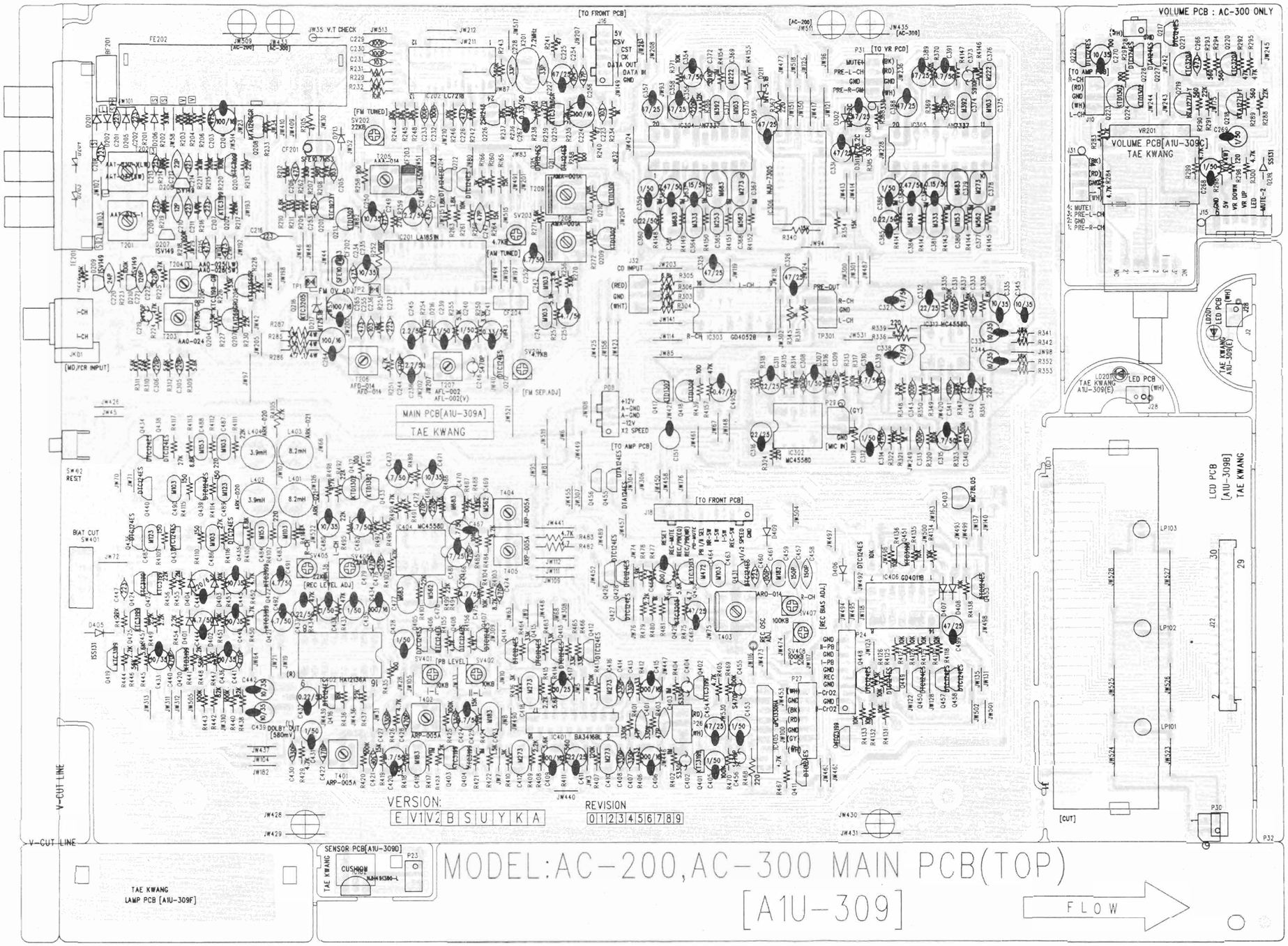

*.OPTION TABLE *

1.THE OPTION LIST FOR MODEL

LOC.NO	AC-200	AC-300	POSITION
JW409	○	×	G-6
JW433	×	○	G-5
JW211	○	×	G-3
JW435	×	○	D-3
VOLUME PCB	○	○	D-2
LED PCB	×	○	C-2
SENSOR PCB	※	○	A-5

2.THE OPTION LIST FOR THE VERSIONS

LOC	3BAND(W) E/B	3BAND(W) V	2BAND S/K	3BAND(SW) U/Y	REMARKS	POSITION
JW101	○	○	○	×	JUMPER	D-6
JW102	○	○	○	×	JUMPER	D-6
JW103	○	○	○	×	JUMPER	C-6
JW207	○	×	○	○	JUMPER	C-5
C201	×	×	×	○	0.022uF	D-6
C202	×	×	×	○	0.022uF	D-6
C208	×	×	×	○	0.022uF	D-6
C213	×	○	×	○	0.022uF	D-6
C214	○	○	×	○	0.022uF	D-6
C216	○	○	×	○	0.047uF	C-6
C221	○	○	×	○	120P	C-6
C222	S220P	S220P	×	S2200P		C-6
C245	×	○	×	×	2.2/50V	C-5
C246	×	○	×	×	S220P	C-5
D205	×	×	×	○	1SS135	D-6
D206	○	○	×	○	1SS135	D-6
D208	○	○	×	○	1SV149	D-6
D210	○	○	×	○	1SV149	C-6
R201	×	×	×	○	1K	D-6
R202	×	×	×	○	5.6K	D-6
R203	×	×	×	×	10K	D-6
R204	○	○	×	○	100K	D-6
R214	○	○	×	○	100K	D-5
R215	○	○	×	○	220K	D-6
R220	○	○	×	○	100K	D-6
R221	○	○	×	○	2.2K	D-6
R223	○	○	×	○	100K	C-6
R225	○	○	×	○	47K	C-6
R226	○	○	×	○	33K	C-6
R228	○	○	×	○	22K	C-5
R229	○	○	×	○	39K	D-5
R304	6.8K	18K	6.8K	6.8K	CD	C-4
R305	6.8K	18K	6.8K	6.8K	CD	C-4
R311	5.6K	18K	5.6K	5.6K	AUX	C-6
R312	5.6K	18K	5.6K	5.6K	AUX	C-6
R315	1K	3K	1K	1K	MIC	C-3
R321	1K	3K	1K	1K	MIC	C-3
R338	6.8K	18K	6.8K	6.8K	TOTAL	C-3
R350	6.8K	18K	6.8K	6.8K	TOTAL	C-3
R438	82K	220K	82K	82K	TAPE	B-6
R442	82K	220K	82K	82K	TAPE	B-6
FE201	FE340A01	FE415G11	FE340A01	FE340A01		D-6
CF201	KX7MS3	10.7MJA	KX7MS3	10.7MS3	SFE-***	D-5
CF202	KX7MS3	10.7MJA	10.7MS3	10.7MS3	SFE-***	C-5
T202	AAT030-1	AAT030-1	×	AAT-037		D-6
T204	AAO-025	AAO-025	×	AAO-026		C-6
T207	×	AFL-002	×	×		C-5
Q203	○	○	×	○	KTC3199Y	D-6
Q205	○	○	×	○	KTC3198GR	C-6
Q206	○	○	×	○	KTA1266GR	C-6

※V2-VERSION: V1-VER 2 ㅂㅐㅁㅐ(ㅌ, CF201,202: 10.7MJA→ 10.7KS3로 변경)

3.THE OPTION LIST FOR APPLICATED CE MARK

LOC	APPLICATED PART	POSITION
FE201	FE415G11	D-6
R203	10K	D-6
R204	100K	D-6

1. AMP P.C BOARD (A2U-151A~C)

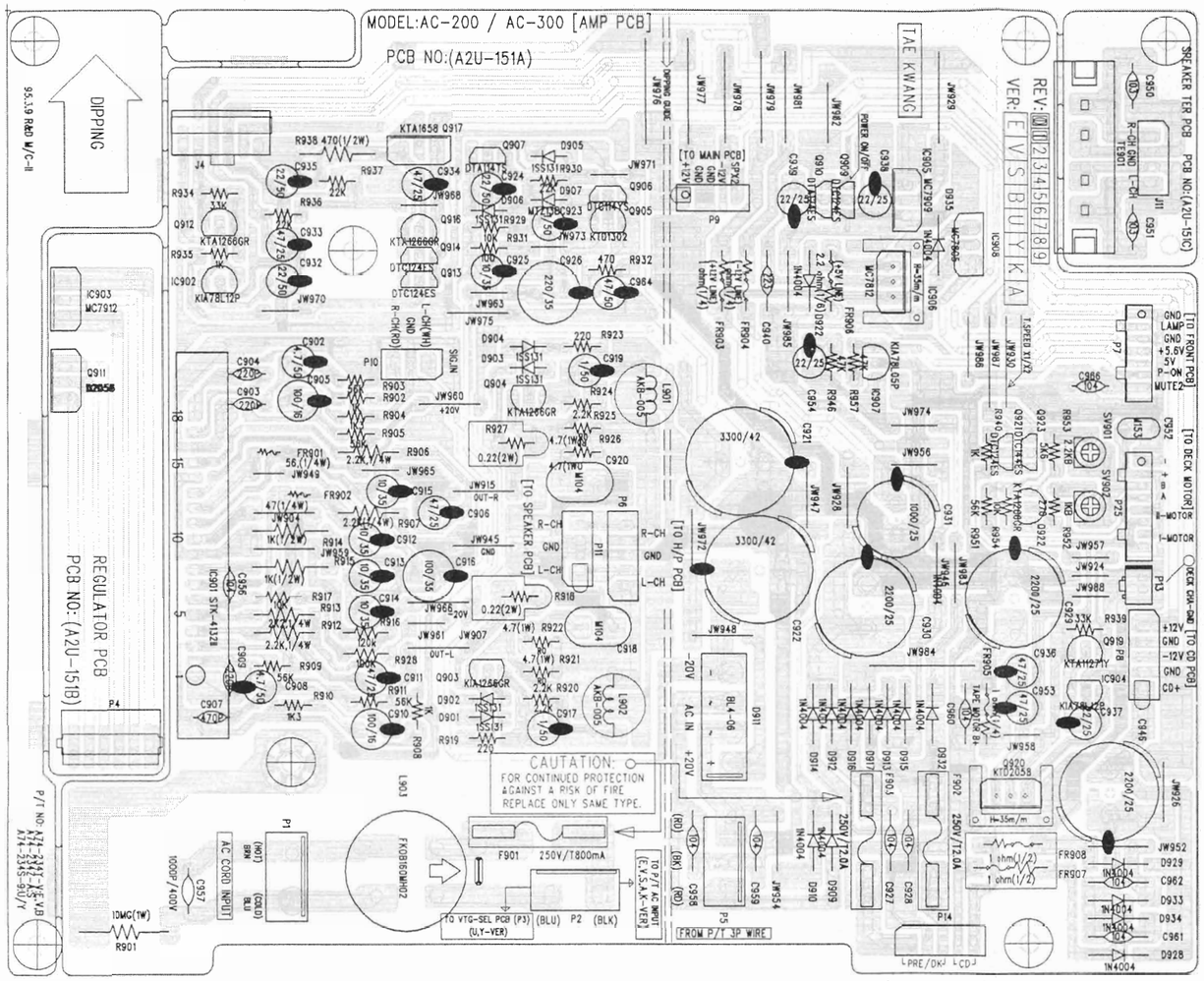

2. VOLTAGE SELECTOR P.C BOARD (A4G-221)
(USE FOR ONLY U, Y VERSION)

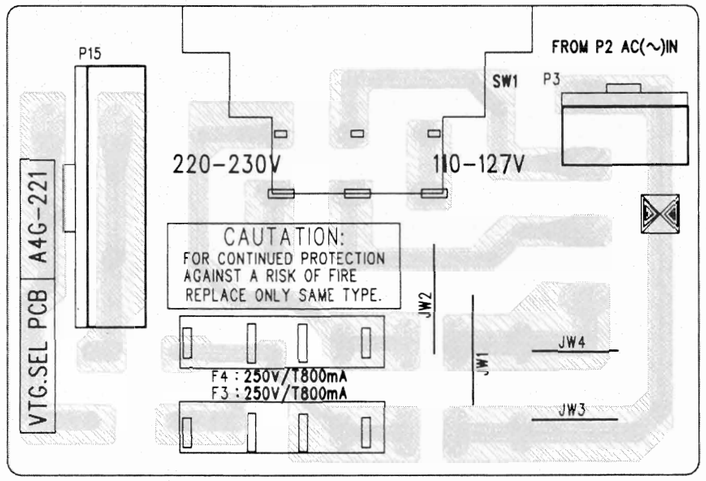

VER / LOC NO	E, V	B	S	U,Y	A	K
F901	O	O	O	JUMPER	O	O

FRONT P.C BOARD (A2U-152A~H)

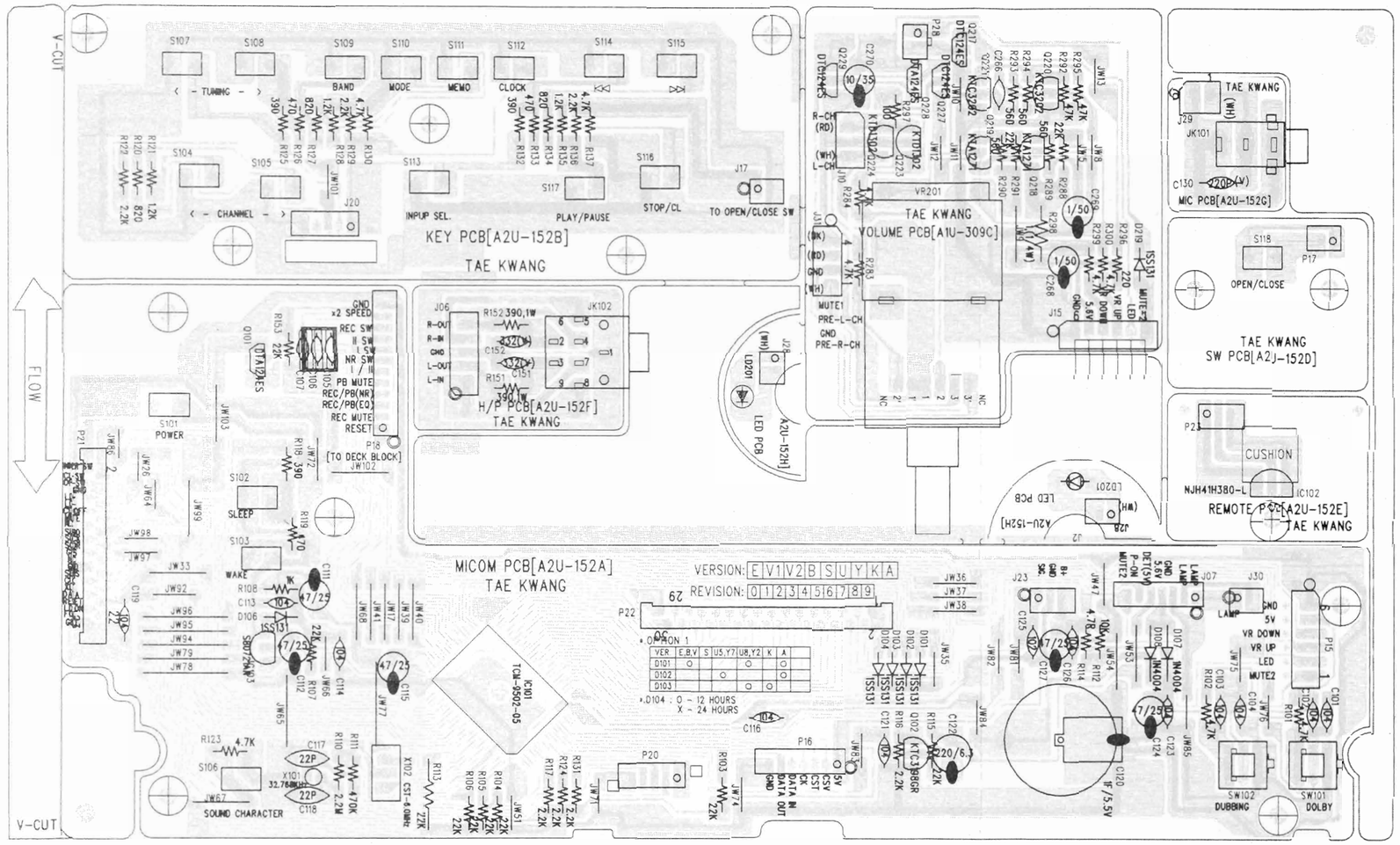

** OPTION LIST FOR VERSION **

VER	E,B,V	S	U5,Y7	U8,Y2	K	A
D101	○			○		○
D102			○			○
D103				○	○	
D104	ADD: 12 HOURS DISPLAY CLOCK DEL: 24 HOURS DISPLAY CLOCK					

VER	E,B	V	S	U,Y	K	A
C130		○				
C151		○				
C152		○				

PCB LAYOUT/CD

CD P.C BOARD (A2U-154)

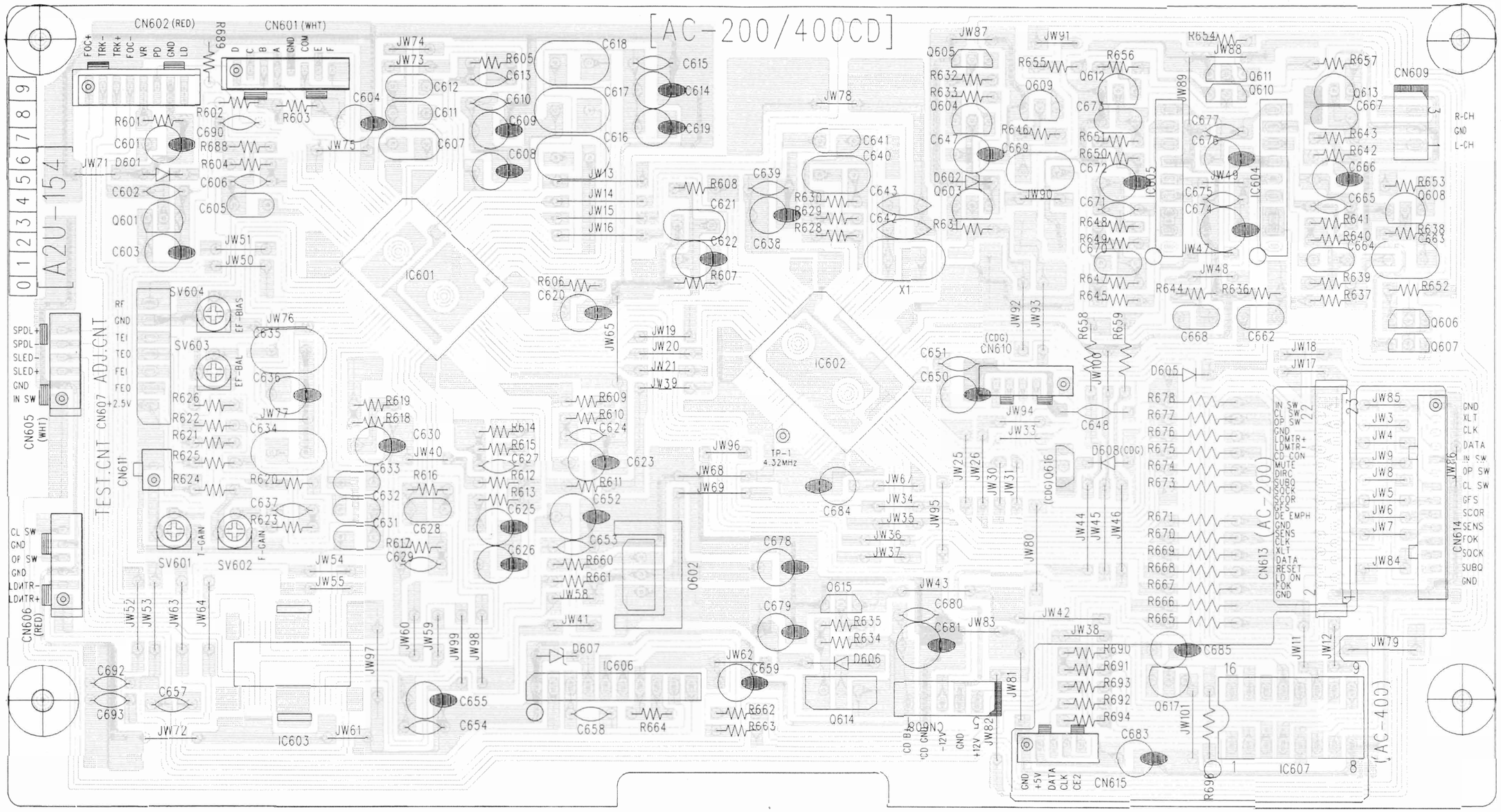

X. INFORMATION OF ICs MI-COM

1. SYSTEM CONTROL MI-COM
H8/3813-FP 100A(IC101)

Pin	I/O	PIN NAME	Function
1	IN	CLOSE SW	CDP
2	IN	OPEN SW	CDP
3	IN	FOK	CDP
4	IN	GFS	CDP
5		AVss	GND
6		TEST	TEST MODE
7	IN	X1	Sub Clock (32.768KHz)
8	OUT	X2	Sub Clock (32.768KHz)
9		Vss	GND
10	OUT	OSC1	Main Clock (6.0MHz)
11	IN	OSC2	Main Clock (6.0MHz)
12	IN	RESET	System Reset Input L:RESET
13		MODE	
14	IN	SCOR	CDP
15	OUT	DATA	CDP
16	OUT	XLT	CDP
17	OUT	CLK	CDP
18	OUT	DE-EMP	CDP
19	IN	SENS	CDP
20	OUT	CD MUTE	CDP H:MUTE ON
21	IN	LD ON	CDP
22	IN	SQCK	CDP
23	IN	SUBQ	CDP
24	IN	XRST	CDP
25	OUT	LD+ (OPMTR)	CDP
26	OUT	LD− (CLMTR)	CDP
27	OUT	T/T LD+	CDP
28	OUT	T/TLD−	CDP
29	OUT	CD ON/OFF	CDP ON/OFF H:ON
30		Vss	GND
31	IN	V3	LCD Bias
32	IN	V2	LCD Bias
33	IN	V1	LCD Bias
34		Vcc	+5V
35	OUT	LCD COM4	LCD Common
36	OUT	LCD COM3	LCD Common
37	OUT	LCD COM2	LCD Common
38	OUT	LCD COM1	LCD Common
39	IN	REC	DECK REC Leaf Switch Input Active:L
40	IN	DECK Ⅱ	DECK Ⅱ Leaf Switch Input Active:L

Pin	I/O	PIN NAME	Function
41	IN	DECK Ⅰ	DECK Ⅰ Leaf Switch Input Active:L
42	OUT	TAPE Ⅰ/Ⅱ	TAPE Ⅰ/Ⅱ Select Output H:TAPE Ⅰ
43	OUT	PB MUTE	TAPE Play Mute Output L:Mute On
44	OUT	REC/PB(NR)	TAPE REC/PB Select Output L:REC
45	OUT	REC/PB(EQ)	TAPE REC/PB Select Output L:REC
46	OUT	REC MUTE	TAPE REC MUTE Output L:Mute On
47	OUT	POWER LED	POWER LED ON/OFF Output H:On
48	OUT	VR-UP	Remote VR UP Output
49	OUT	VR-DOWN	Remote VR DOWN Output
50	IN	OPTION	TUNER BAND, HOUR Select Option
51	OUT	LCD SEG	LCD Segement Output
52	OUT	LCD SEG	LCD Segement Output
53	OUT	LCD SEG	LCD Segement Output
54	OUT	LCD SEG	LCD Segement Output
55	OUT	LCD SEG	LCD Segement Output
56	OUT	LCD SEG	LCD Segement Output
57	OUT	LCD SEG	LCD Segement Output
58	OUT	LCD SEG	LCD Segement Output
59	OUT	LCD SEG	LCD Segement Output
60	OUT	LCD SEG	LCD Segement Output
61	OUT	LCD SEG	LCD Segement Output
62	OUT	LCD SEG	LCD Segement Output
63	OUT	LCD SEG	LCD Segement Output
64	OUT	LCD SEG	LCD Segement Output
65	OUT	LCD SEG	LCD Segement Output
66	OUT	LCD SEG	LCD Segement Output
67	OUT	LCD SEG	LCD Segement Output
68	OUT	LCD SEG	LCD Segement Output
69	OUT	LCD SEG	LCD Segement Output
70	OUT	LCD SEG	LCD Segement Output
71	OUT	LCD SEG	LCD Segement Output
72	OUT	LCD SEG	LCD Segement Output
73	OUT	LCD SEG	LCD Segement Output
74	OUT	LCD SEG	LCD Segement Output
75	OUT	LCD SEG	LCD Segement Output
76	OUT	LCD SEG	LCD Segement Output
77	OUT	LCD SEG	LCD Segement Output
78		N.C	
79		Vcc	+5V
80	OUT	Mute2	Power ON/OFF Output L:ON

Pin	I/O	PIN NAME	Function
81	OUT	SPEED 1	1MECHA PLAY Output (3CDP) H:ON
82	OUT	SPEED 2	2MECHA PLAY Output (3CDP) H:ON
83	OUT	SPEED 3	3MECHA PLAY Output (3CDP) H:ON
84	OUT	P=ON	PRE Mute Output H:ON
85	IN	REMOTE INPUT	Remote Data Input
86	OUT	CSV	NJU-7305 Data Output
87	OUT	CST	LC-7218 Data Output
88	OUT	CK	NJU-7305, LC-7218 Clock Data Output
89	IN	DATA IN	LC-7218 Data Input
90	OUT	DATA OUT	NJU-7305, LC-7218 Output
91	IN	POWER OFF DET.	POWER OFF DET. Input
92		AVcc	GND
93	IN	KEY INPUT. 1	Tact Switch Input
94	IN	KEY INPUT. 2	Tact Switch Input
95	IN	KEY INPUT. 3	Tact Switch Input
96	IN	KEY INPUT. 4	Tact Switch Input
97	IN	T/T SW	CDP Active:L
98	IN	T/T SW	CDP Active:L
99	IN	INNER SW	CDP (LIMIT) Active:L
100	IN	CLAM SW	CDP Active:L

2. IC901 KA9220B (RF + 1SSP FOR CDP)

Pin No.	Port Name	Description
1	AVEE(R)	Analog negative power supply input pin for RF part
2	CPH	Capacitor connection pin of mirror hold.
3	CBH	Capacitor connection pin of defect bottom-hold
4	NC	
5	NC	
6	NC	
7	PFSET	Peak frequency setting pin for focus, tracking compensation and fc (cut off frequency) of CLV LPF.
8	SSTOP	Check the position pin of pick-up whether inside or not.
9	NC	
10	AVCC(S)	Analog positive power supply input pin for SERVO part.
11	WDCH	Auto-sequencer clock-input pin (Normal speed=88.2KHz, Double speed=176.4KHz)
12	SMPD	Connection pin of DSP SMPD
13	SMON	Connection pin of DSP SMON, spindle servo ON at "H"
14	NC	
15	TGSW	Providing time constant to change the high frequency tracking gain
16	RTG	Capacitor connection pin to switch the tracking gain of high frequency
17	LFR	Capacitor connection pin to perform rising low bandwidth of focus servo loop
18	FSW	High frequency gain of focus servo loop can be changed by FS3 switch ON or OFF
19	HFGD	Reducing high frequency gain with capacitor connected between pin 18 and pin 19.
20	FSCH	Time constant external pin to generate focus search waveform
21	VREGI	External regulator voltage input pin for VCO
22	ISET	Determining the peak value of focus search, track jump and SLED kick
23	VREG	3.5V Regulator output pin
24	NC	
25	SMEF	Providing an external LPF time constant of CLV SERVO Loop
26	NC	
27	MCK	Clock input pin from micom
28	MLT	Latch input pin from micom
29	MDAT	Data input pin from micom
30	RESET	Reset input pin from micom, reset at "L"
31	LOCK	Pin for operation of the sled runaway prevention function at "L"
32	TRCNT	Track count output pin
33	ISTAT	Internal status output pin
34	AVEE(S)	Analog negative power supply input pin for SERVO part
35	NC	
36	NC	
37	AASC	Auto-Asymmetry control input pin
38	EFMO	EFM comparator output pin
39	SLEN	Non-inverting input pin of SLED SERVO amplifier

Pin No.	Port Name	Description
40	SLEO	Output pin of SLED SERVO amplifier
41	SLEI	Inverting input pin of SLED SERVO amplifier
42	TEST2	Test input pin to change speed mode Normal speed="H", Double speed="L"
43	SPDI	Inverting input pin of spindle servo amplifier
44	SPDLO	Spindle servo amplifier output pin
45	FCE	Inverting input pin of focus servo complifier.
46	FSEO	Output pin of focus servo amplifier
47	TKEI	Non-inverting input pin of tracking servo amplifier
48	TKEO	Output pin of tracking servo amplifier
49	NC	
50	ATS	Anti-shock input pin
51	TZC	Tracking Zero Crossing input pin
52	TE2	Tracking Error Servo input pin
53	TE1	Output pin of tracking Error Amplifier
54	TDFCT	Capacitor Connection pin for Defect Compensation of tracking servo
55	DVCC(S)	Digital positive power supply input pin for servo part
56	FE2	Focus error servo input pin
57	FE1	Output pin of focus error Amplifier
58	FDFCT	Capacitor connection pin for defect compensation of focus servo
59	FOK	Output pin of Focus ok comparator.
60	LDON	Laser diode ON/OFF control pin
61	EI	Feedback input pin of E I-V amplifier
62	EO	Output pin of E I-V Amplifier
63	FBIAS	Bias pin of non-inverting input of focus error amplifier
64	DVEE(S)	Digital negative power supply input pin for servo part
65	RFI	Output Signal of RF summing amplifier is inputed through capacitor
66	RFO	Output pin of RF summing amplifier
67	RF−	Inverting input pin of RF summing amplifier
68	RV	Output pin of (AVCC+AVEE)/2 Voltage
69	CV	Bias input pin of Center Voltage buffer
70	LD	Output pin of APC amplifier
71	PD	Input pin of APC amplifier
72	AVCC(R)	Analog positive power supply input pin for RF part
73	NC	
74	PD2	Inverting input pin of RF-I-V AMP2
75	PD1	Inverting input pin of RF-I-V AMP1
76	F	Inverting input pin of F I-V AMP
77	E	Inverting input pin of E I-V AMP
78	NC	
79	DCC2	Defect bottom-hold output is inputed through capacitor
80	DCC1	Output pin of defect bottom-hold

3. IC902 KS9282B (DSP + 1DAC(16BIT) FOR CDP)

Pin No.	Port Name	I/O	Description
1	AVDD1		Analog Vcc1
2	DPDO	O	Charge pump output for master PLL
3	DPFIN	I	Filter input for master PLL
4	DPFOUT	O	Filter output master PLL
5	CNTVOL	I	VCO control voltage for master PLL
6	AVSS1		Analog Ground 1
7	NC		
8	XIN	I	X-tal oscillator input
9	XOUT	O	X-tal oscillator output
10	WDCH	O	Word clock of 48 bit/SLOT(Normal speed=88.2KHz, Double speed=176.4KHz)
11	NC		
12	NC		
13	DVSS1		Digital Ground 1
14	NC		
15	NC		
16	NC		
17	VREFL1	I	Input terminal 1 of reference voltage "L" (GND Connection)
18	AVDD2		Analog VCC2
19	RCHOUT	O	Right-Channel audio output through D/A Converter
20	LCHOUT	O	Left-Channel audio output through D/A Converter
21	AVSS2		Analog Ground2
22	VREFH1	I	Input terminal 1 of reference voltage "H" (Vdd connection)
23	NC		
24	NC		
25	LKFS	O	The Lock Status output of frame sync
26	SOS1	O	Output of subcode sync signal(S0+S1)
27	RESET	I	System reset at "L"
28	SQEN	I	SQCK I/O Control("L":internal CK, "H":external CK)
29	SQCK	I/O	Clock for output Subcode-Q data
30	SQDT	O	Serial output of Subcode-Q data
31	NC		
32	SBCK	I	CLOCK for output subcode-Q data
33	SDAT	O	Subcode serial data output
34	$DV_{DD}1$		Digital Vcc1
35	MUTE	I	Mute control Input("H":Mute ON)
36	MLT	I	Latch Signal Input from Micom
37	MDAT	I	Serial data Input from Micom
38	MCK	I	Serial Clock Input from Micom
39	NC		
40	NC		

Pin No.	Port Name	I/O	Description
41	NC		
42	NC		
43	NC		
44	NC		
45	NC		
46	NC		
47	NC		
48	NC		
49	NC		
50	NC		
51	NC		
52	NC		
53	DVss2		Digital Ground 2
54	NC		
55	NC		
56	NC		
57	NC		
58	NC		
59	NC		
60	NC		
61	SEL1	I	GND
62	SEL2	I	GND
63	SEL3	I	GND
64	SEL4	I	GND
65	TEST	I	Test Terminal(L=Normal operating state) GND
66	EFMI	I	EFM Signal input
67	NC		
68	ISTAT	O	The internal status output
69	TRCNT	I	Tracking counter input signal
70	LOCK	O	Output signal of LKFS Condition sampled PBFR/16(If LKFS is "H", Lock is "H", If the LKFS is sampled "L" at least 8 times by PBFR/16, Lock is :"L")
71	PBFR	O	Write frame clock (Lock: 7.35KHz)
72	SMEF	O	LPF time constant control of the spindle servo error signal
73	SMON	O	ON/OFF control signal for spindle servo
74	$DV_{DD}2$		Digital Vcc2
75	SMPD	O	Spindle Motor drive(Rough control in the CLV-S mode Phase control in the CLV-P mode)
76	SMSD	O	Spindle Motor drive(Velocity control in the CLV-P mode)
77	NC		
78	NC		
79	DSPEED	I	Double speed mode control(H:Normal Speed, L:Double Speed)
80	NC		

ABBREVIATIONS

TUNER

ABBREVIATION	EXPLANATION	ABBREVIATION	EXPLANATION
AFC	Auto Frequency Control	MEMO	MEMOry
AGC	Auto Gain Control	MI-COM	MIcro-COMputer
ALC	Auto Level Control	MIN	MINimum
AM	Amplitude Modulation	MIX	MIXing
AMP	AMPlifier	MPX	MultipleX
ANT	ANTenna	MW	Medium Wave(frequency)
BATT	BATTery	NC	No Connection
BLK	BLocK	NFB	Negative Feed Back
BUFF	BUFFer	OSC	OSCillator
COMP	COMParator	PCB	Printed Circuit Board
DET	DETect(DETector)	PLL	Phase Locked Loop
FLD	FLuorescent Display	Q.D	Quadrature Detector
FM	Frequency Modulation	Rch	Right channel
FREQ	FREQuency	REF	REFerence
GND	GrouND	REG	REGulator
H	High	RF	Radio Frequency
HPF	High Pass Filter	SEG	SEGment
IF	Intermediate Frequency	SELE	SELEctor
IHF	Institut of High Fidelity	SENS	SENSitivity
IND	INDicator	SIG	SIGnal
I/O	In/Out	S/N	Signal to Noise Ratio
JW	Jumper Wire	SSG	Standard Signal Generator
L	Low	STD	STanDard
LCD	Liquid Crystal Display	SW	SWitch : Short Wave(frequency)
Lch	Left channel	THD	Total Harmonic Distortion
LED	Light Emiting Diode	TP	Test Point
LPF	Low Pass Filter	VCO	Voltage Controlled Oscillator
LW	Long Wave(Frequency)	VR	Variable Resistor
		X'TAL	Crystal

COMPACT DISC

ABBRIVIATION	EXPLANATION	ABBREVIATION	EXPLANATION
A-D	Analog to Digital (Converter)	Mb	Mega Bits
ADC	Analog to Digital (Converter)	MDA	Mortor Drive Amplifier
BCD	Binary Code Decimal	MFM	Modified Frequency Modulation
BPI	Bits per Inch	MM	Mono-stable Multivibrator
CD	Compact Disc	M_2FM	Modified Modified Frequency Modulation
CIRC	Cross Interleaving & Reed Solomon Coding	MOD2	Modulo 2(Addition)
CLV	Constant Linear Velocity	MP	Microprocessor
CP	Clock Pulses	MSB	Most Significant Bit
CRCC	Cyclic Redundancy Check Codes	NA	Numerical Aperture
D Level	Decision Level	NRZ	Non Return to Zero
D-A	Digital to Analog (Converter)	NRZ-1	Non Return to Zero Inverted
DAC	Digital to Analog (Converter)	P	Parity Data
DAD	Digital Audio Disc	PAM	Pulse Amplitude Modulation
DEM	Dynamic Element Matching	PCM	Pulse Code Modulation
DPD	Differential Phase Detection	PD	Phase Detector
DSV	Digital Sum Value	PE	Phase Encode
EFM	Eight to fourteen Modulation	PLL	Phase Locked Loop
EX-OR	Exclusive OR	PNM	Pulse Number Modulation
FCI	Flux Changes per Inch	PPM	Pulse Phase Modulation
FIR	Finite Impulse Response	PWM	Pulse Width Modulation
FP	Front Pulse	Q	Parity Data
FPG	Front Pulse Gate	R, R_1, R_2, etc	Data for Right Channel
F	Frequency of Sampling	RAM	Random Access Memory
GF	Galois Field	RPG	Rear Pulse Gate
H & V (Parity)	Horizonal & Vertical	SCOOP	Self Coupled Optical Pick-up
IIR	Infinite Impulse Response	S & H	Sample & Hold
KB	Kilo Bits	S/N	Signal to Noise Ratio
L, L^1, L^2, etc.	Data for Left Channel	SSG	Standard Signal Generator
LPF	Low Pass Filter	SYSCON	SYStem CONtrol
LSB	Least Significant Bit		

CASSETTE

ABBREVIATION	EXPLANATION	ABBREVIATION	EXPLANATION
AC	Alternating Current	MIN	MINute
A/D	Analog/Digital	MML	Maximum Modulation Level
AF	Auto Fader	MOL	Maximum Output Level
AMP	AMPlifier	MPX	Multi Plex
AR	Anti Recording	NC	Not Connected (No Connection)
AT BIAS	Auto Turning BIAS	NFB	Negative Feed Back
ATT	ATTenuator	NORM	NORMal
BAL	BALance	NR	Noise Reduction
BEF	Band Elimination Filter	OSC	OSCillator (OSCillation)
BSS	Blank Search System	P	Pulse
CAP M	CAPstan Motor	PB	Play Back
CH	CHannel	QMSS	Quick Memory Search System
COMP	COMParator	QR	Quick Reverse
CONT	CONTinuance	R CH	Right CHannel
CRLP	Computer Recording Level Processing	REC	RECord(RECording)
CS	Chip Select	REV	REVerse
D/A	Digital/Analog	ROT	ROTation
DC	Direct Current	REW	REWind
DET	DETector	SEC	SECond
DISCRI	DISCRIminator	SELE	SELEctor
DUB	DUBbing	SENS	SENSitivity
EQ	EQualizer	SEPP	Single Ended Push Pull
FF(or F.FWD)	Fast Foward	SIG	SIGnal
FLD	FLuoresent Display	SPECT	SPECTrum
FREQ	FREQuency	STD	STanDard
FWD	ForWarD	SW	SWitch
GND	GrouND	SYSCON	SYStem CONtrol
H	High	TP	Test Point
HPF	High Pass Filter	TRIG	TRIGa
IND	INDicator	VCA	Voltage Control Attenuator
IPLS	Instant Program Location System	VOL	VOLume
L	Low	VOLT	VOLTage
L CH	Left CHannel	VR	Variable Resistor
LED	Light Emitining Diode	X'TAL	crysTAL
MEMO	MEMOry	X1	Normal speed
MICOM	MIcroCOMputer	X2	Dubble speed

AMPLIFIER

ABBREVIATION	EXPLANATION
A	Analog
AC	Alternating Current
AMP	AMPlifier
CD	Compact Disc
COM	COMmon
D	Digital
D/A	Digital to Analog
DAC	Digital to Analog Converter
DAT	Digital Audio Tape recorder
DC	Direct Current
GND	GrouND
L	Left
LED	Light Emitting Diode
MC	Moving Coil
MM	Moving Magnet
PCB	Printed Circuit Board
R	Right
REG	REGulator
REC	RECord
TR	TRansistor
SW	SWitch
V.AMP	Voltage AMPlifier
V.DISC	Video DISC
VR	Variable Resistance
VTR	Video Tape Recorder

I. SPECIFICATIONS

Model No: SR-200

Type	3Way Bass Reflex
Component	Woofer : TAU-13W03005
	Mid-Range : CT-57F12T
	Piezo Tweeter : PT-20T
Rated Power Input	20W
Maximum Power Input	40W
Rated Impedance	6 Ohm
Dimension	173(W) × 280(H) × 230(D) mm
Weight	3Kg/PC

II. SCHEMATIC DIAGRAM

Model No: SR-200

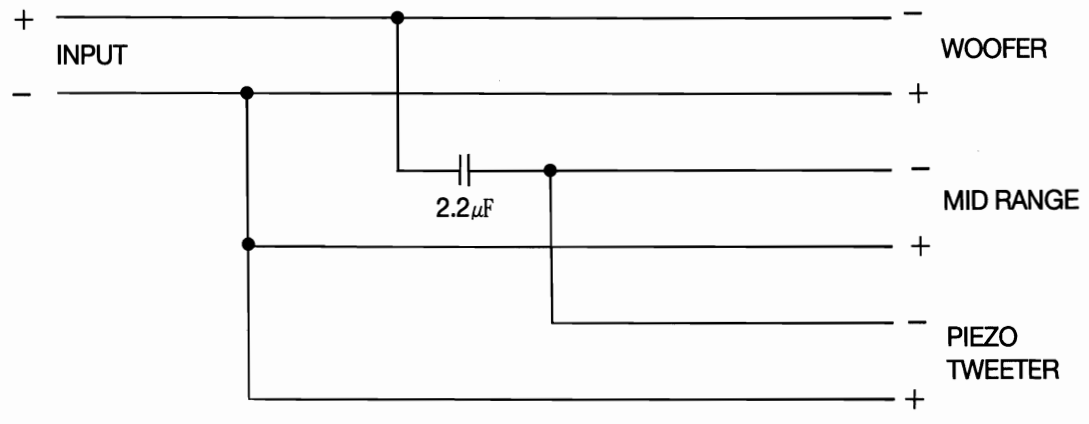

III. PARTS LIST

Model No:SR-200

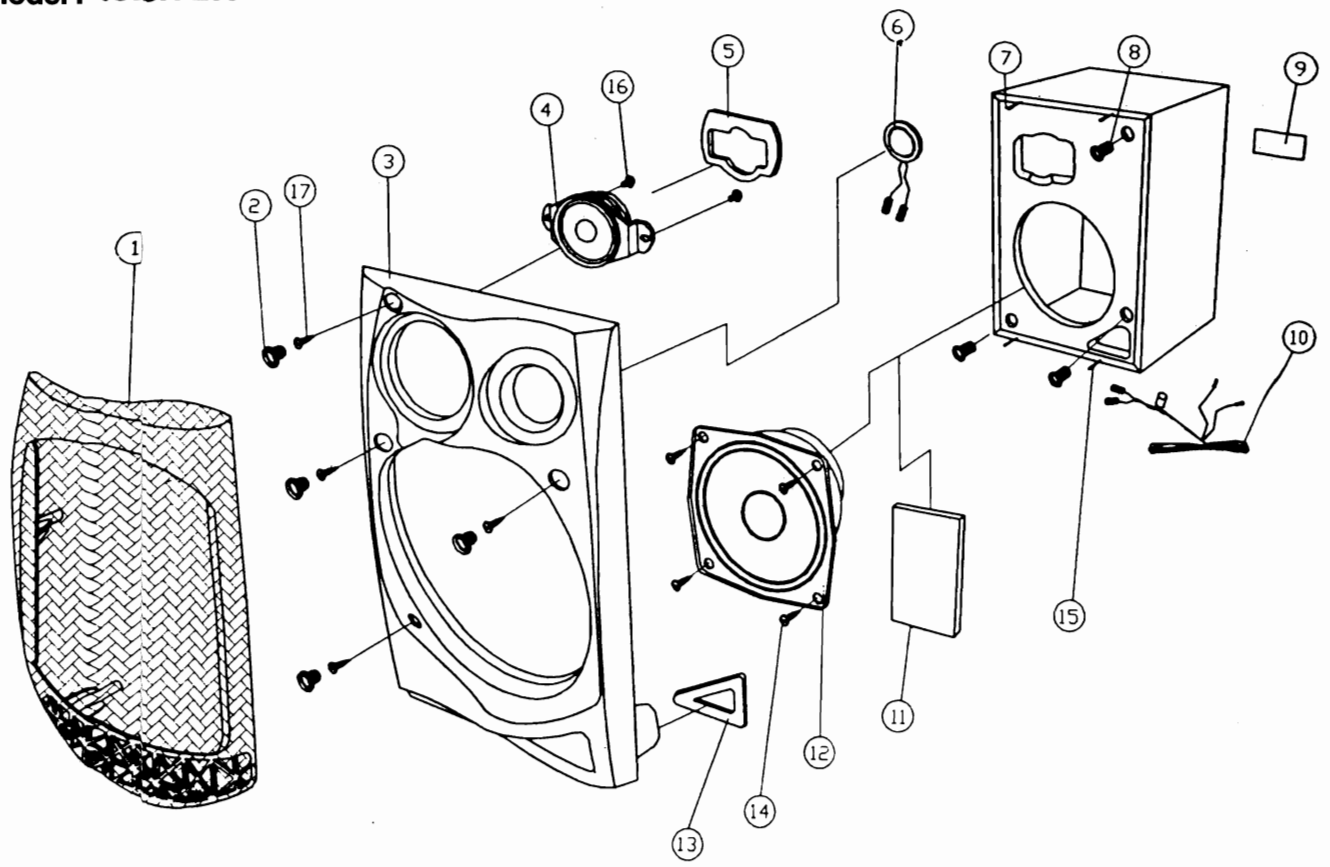

Ref. No	Part No.	Part Name	Description
1(L)	MJSG-00280-001	FRAME NET(L)	
1(R)	MJSG-00290-001	FRAME NET(R)	
2	MRSG-06230-004	HOOK RUBBER	
3(L)	MJSF-00560-ZZ1	COVER FRONT(L)	
3(R)	MJSF-00570-ZZ1	COVER FRONT(R)	
4	SPKT-00820-A70	SP. TWEETER	CT-57F12T
5	MRSG-07230-004	CUSHION MID	
6	SPPZ-00014-A70	SP. PIEZO	PT-20T
8	MJSG-00470-004	HOOK TAPER	
9(L)	YLSP-BG000-01L	BACK LABEL(L)	
9(R)	YLSP-BG000-01R	BACK LABEL(R)	
10	WSD2-24A9A-251	WIRE SP. CORD(D)	D-20 / 0.12, 2P, 1.9M 2.2μF
11	MRSG-07250-004	SPONGE	150×256×10t
12	A2UW-F0000-01J	SP. WOOFER	TAU-13W03005
13	MRSG-07240-004	CUSHION DUCT	
14	XSWB-40150-ZB1	SCREW WOOD	FE-ZB BHT1 4×15
15	MMSC-00320-004	AIR NAIL	D2×20
16	MMSC-00320-004	SCREW COVER	D3×D9.5W / W×7
17	XSWB-40180-ZY1	SCREW WOOD	FE-ZY BHT1 4×18