AKAI SERVICE MANUAL

S900

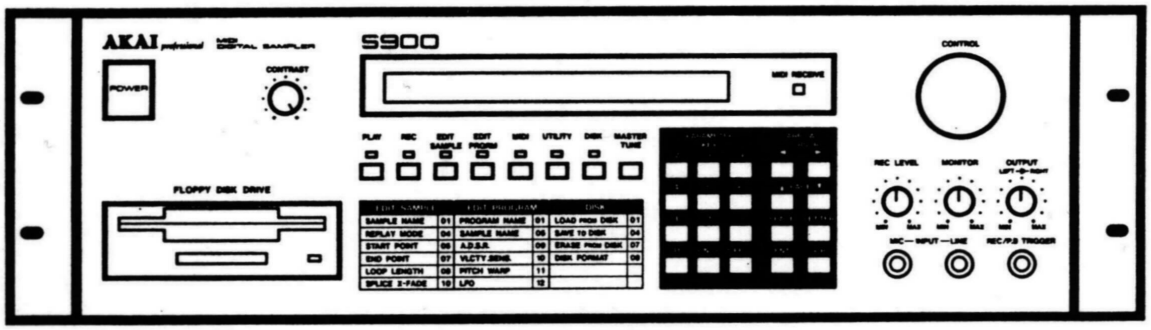

MIDI DIGITAL SAMPLER

MODEL S900

DRUM INTERFACE

MODEL ASK90

SPECIFICATIONS

System	Digital sampling Sampling frequency: 7.5 kHz ~ 40 kHz (MIN ~ MAX) Sampling time: 63.3 sec. ~ 11.75 sec. (MAX ~ MIN) Voice: 8 Voice Range: 6 Octave	**Communication**	RS-232C or EQUIVALENT
Storage	Built-in FLOPPY DISK DRIVE Memory capacity: 1M byte Memory Medium: 3.5 inch (2DD) BOTH SIDE, DOUBLE TRACK, DOUBLE DENSITY Internal memory: 750K byte	**External jack**	MIDI (IN, OUT, THRU) REC trigger × 1 Mic input/P.B trigger × 1 Line input/P.B trigger × 1 Line output × 8 Stereo output × 2 (L,R) Mix output × 1 Voice output × 1 (13 PIN/DIN)
Multi sampling	32	**Dimensions**	482.6 (W) × 132.6 (H) × 410 (D) mm (EIA Rack mount/3U)
Edit	Scanning (ONE SHOT, LOOPING, ALTERNATING) A.D.S.R (Velocity-Attack, Velocity-Release) Velocity cross fade Velocity switch Positional cross fade Attack pitch offset (– Velocity) LFO (delay, rate, depth) Filter (Key tracking, Velocity) Sample merge	**Weight**	10.8 kg

* For improvement purposes, specifications and design are subject to change without notice.

Downloaded from www.Manualslib.com manuals search engine

★SAFETY INSTRUCTIONS

PRECAUTIONS DURING SERVICING

1. Parts identified by the ⚠ symbol parts are critical for safety. Replace only with parts number specified.
2. In addition to safety, other parts and assemblies are specified for conformance with such regulations as those applying to spurious radiation.
   These must also be replaced only with specified replacements.
   Examples: RF converters, tuner units, antenna selector switches, RF cables, noise blocking capacitors, noise blocking filters, etc.
3. Use specified internal wiring. Note especially:
   1) Wires covered with PVC tubing
   2) Double insulated wires
   3) High voltage leads
4. Use specified insulating materials for hazardous live parts. Note especially:
   1) Insulation Tape
   2) PVC tubing
   3) Spacers (Insulating Barriers)
   4) Insulation sheets for transistors
   5) Plastic screws for fixing microswitch (especially in turntable)
5. When replacing AC primary side components (transformers, power cords, noise blocking capacitors, etc.), wrap ends of wires securely about the terminals before soldering.

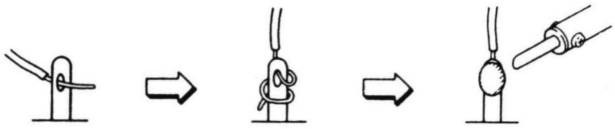

6. Observe that wires do not contact heat producing parts (heatsinks, oxide metal film resistors, fusible resistors, etc.).
7. Check that replaced wires do not contact sharp edged or pointed parts.
8. Also check areas surrounding repaired locatoins.
9. Use care that foreign objects (screws, solder droplets, etc.) do not remain inside the set.

SAFETY CHECK AFTER SERVICING

Confirm the specified insulation resistance between power cord plug prongs and externally exposed parts of the set is greater than 10 M ohms. but for equipment with external antenna terminals (tuner, receiver, etc.) and is intended for [C] or [A], specified insulation resistance should be headphone jacks line-in-out jacks etc. more than 2.2 M ohms (ground terminals, microphone jacks).

PRECAUTION FOR THE LITHIUM BATTERY

The LITHIUM BATTERY employed for memory Back up has a explosive probability when the BATTERY itself is excessive heated.

IN CASE OF REPLACING: RESOLDER and SOLDER AS RECOMMENDED WAY.

〔DANGER〕

〔RECOMMENDED WAY〕

★INFORMATION

SYMBOLS FOR PRIMARY DESTINATION

Alphabet indicates the destination of the units as listed below.

Symbols	Principal Destinations
[A]	USA
[B]	UK
[C]	Canada
[E]	Europe (except UK)
[J]	Japan
[S]	Australia
[V]	W. Germany only
[U]	Universal Area
[Y*]	Custom version

VOLTAGE CONVERSION

([E, V, B, S] Model only)

Before connecting the power cord. SET the VOLTAGE SELECTOR located on the rear panel with a screwdriver so that the correct voltage is indicated.

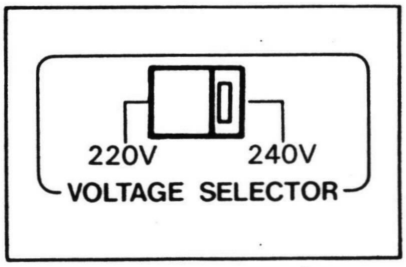

Downloaded from www.Manualslib.com manuals search engine

I. DISMANTLING OF UNIT

In case of trouble, etc. necessitating dismantling, please dismantle in the order shown in the photographs. Reassemble in reverse order.

1. REMOVAL OF UPPER COVER

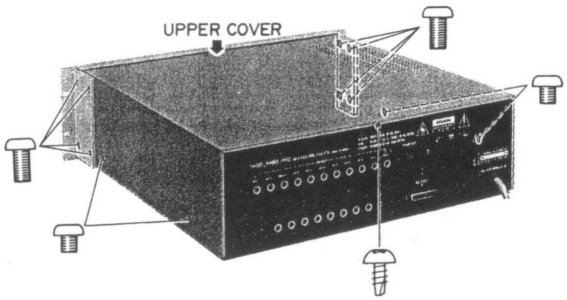

2. REMOVAL OF BOTTOM COVER

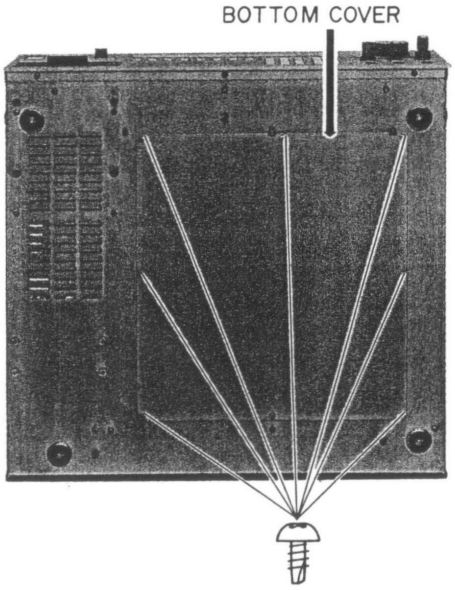

3. REMOVAL OF FRONT PANEL

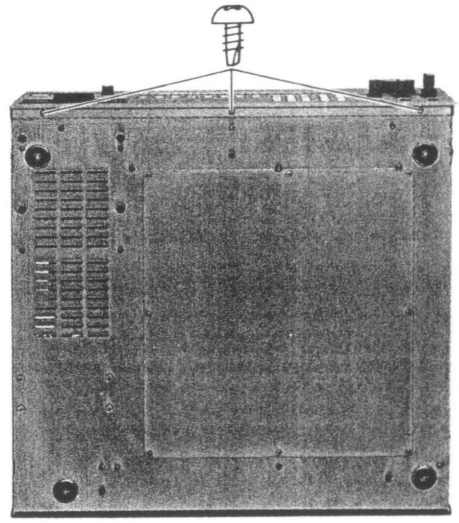

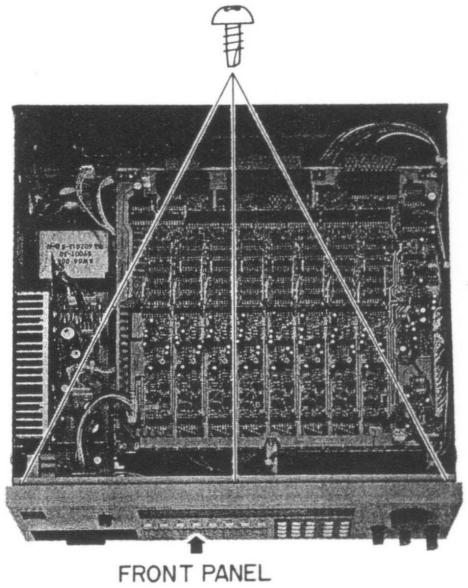

Downloaded from www.Manualslib.com manuals search engine

II. CONTROLS

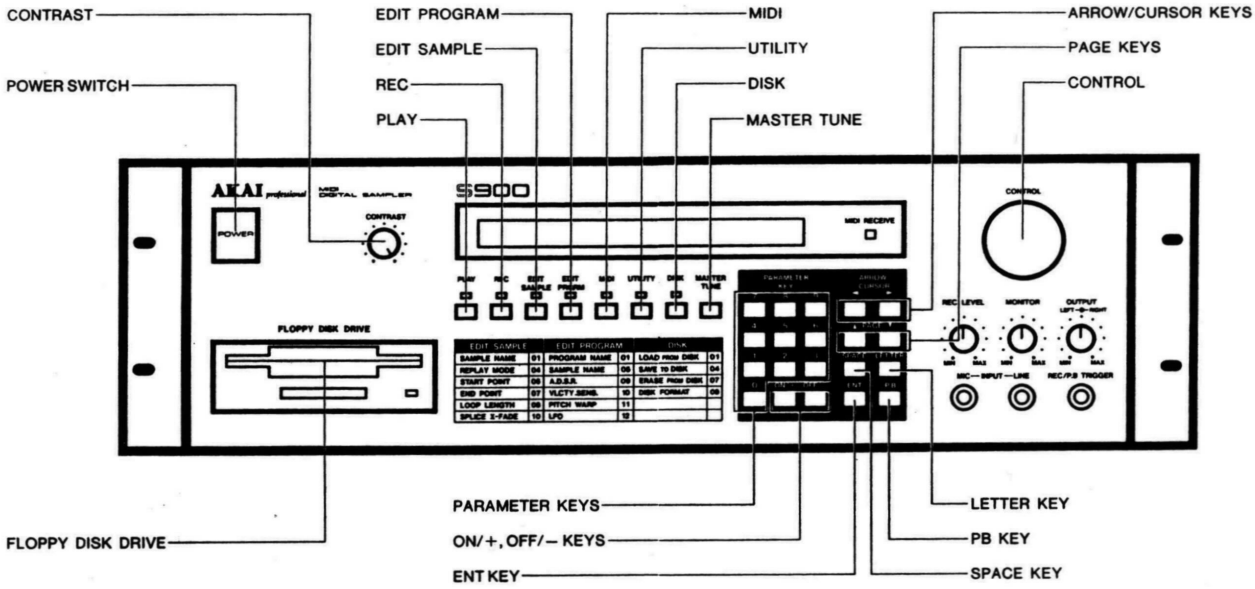

III.CONNECTIONS

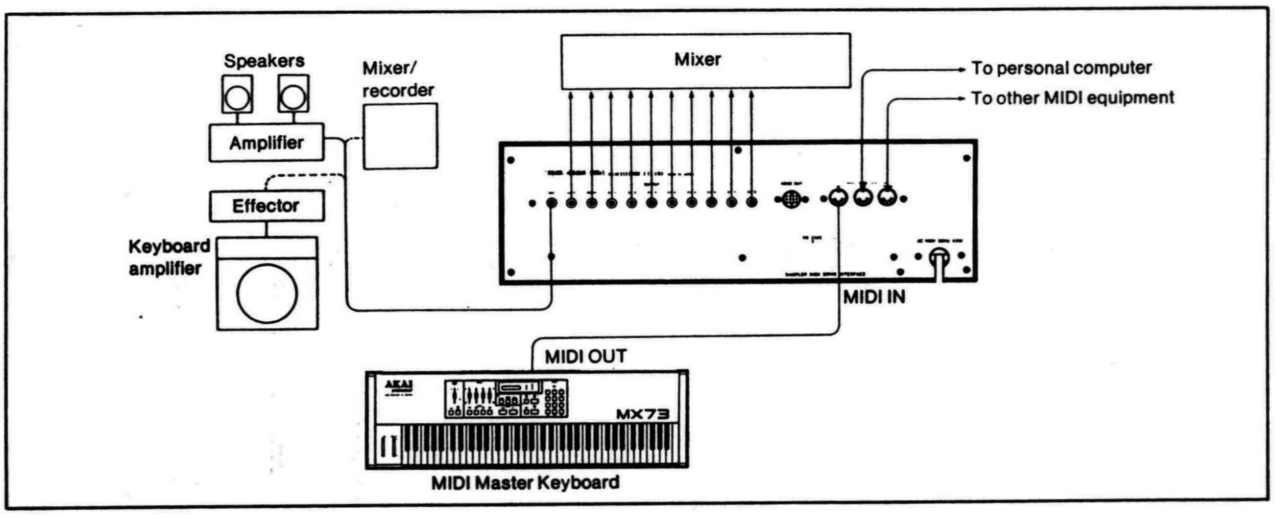

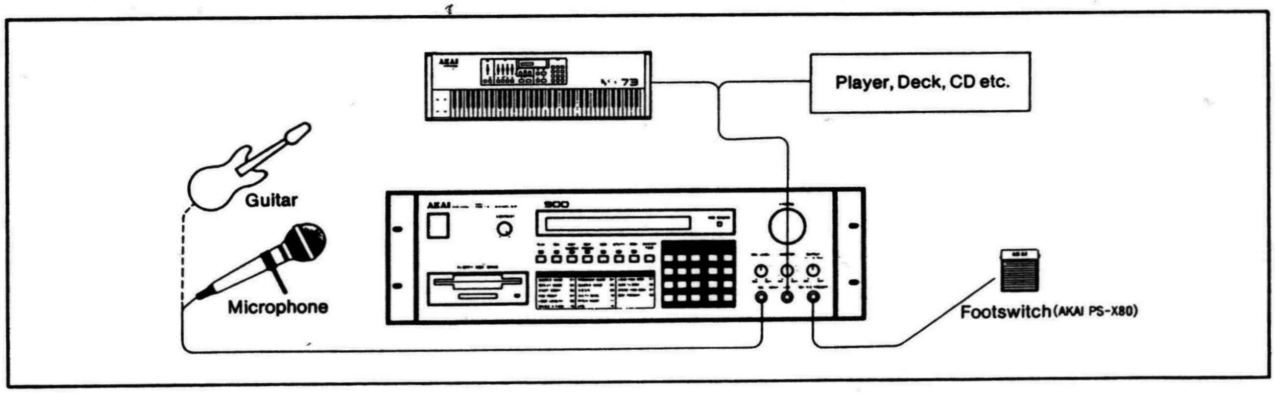

Downloaded from www.Manualslib.com manuals search engine

IV. PRINCIPAL PARTS LOCATION

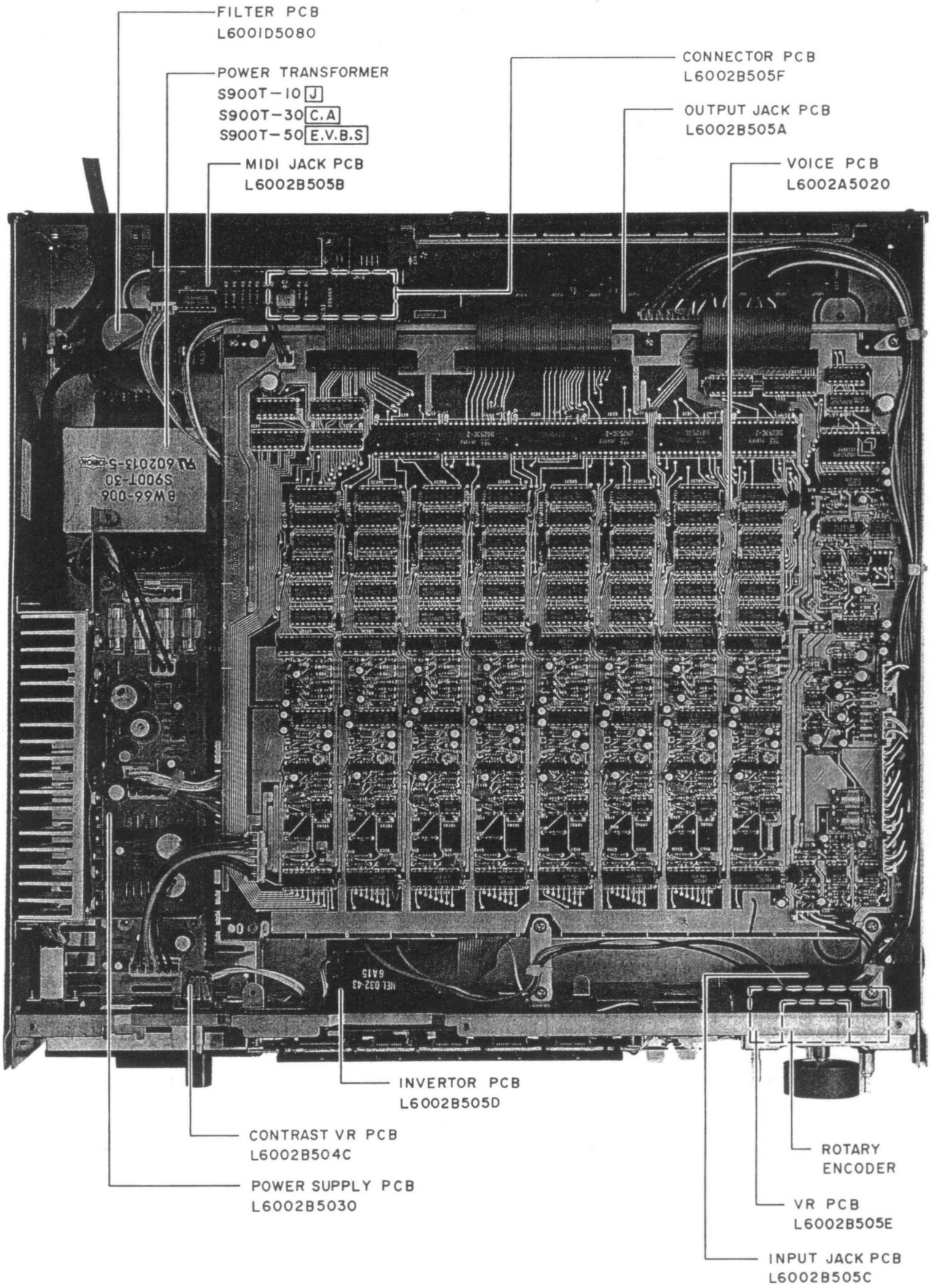

Fig. 4-1

Downloaded from www.Manualslib.com manuals search engine

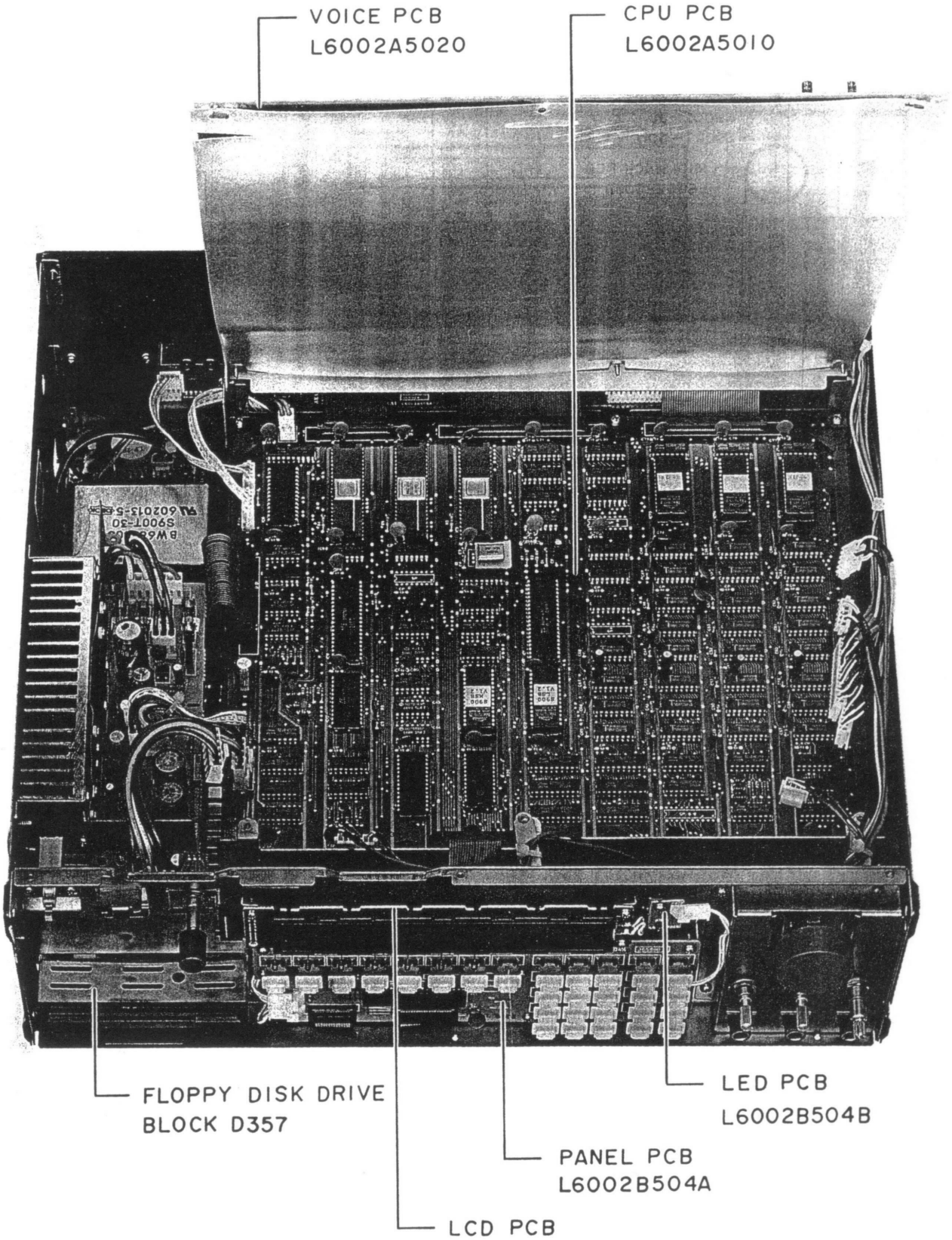

Fig. 4-2

Downloaded from www.Manualslib.com manuals search engine

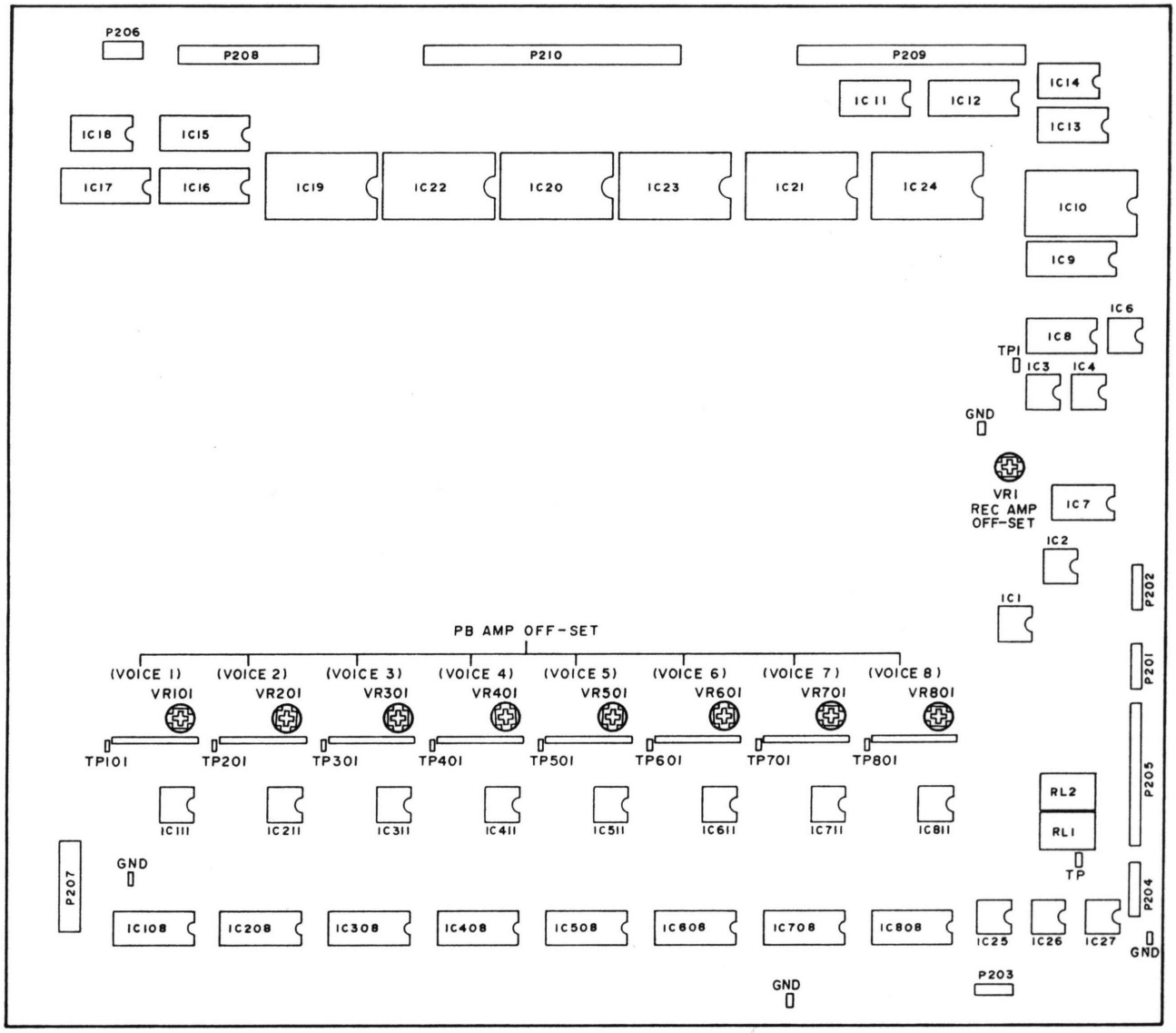

Fig. 5-1 Adjustment points of VOICE PC Board

5-1. ADJUSTMENT OF REC AMP OFF-SET

1) Connect the digital DC voltmeter between TP1 (REC AMP OFF-SET) and TP (GND).
2) Adjust VR1 (REC AMP OFF-SET) so that the reading on the digital DC voltmeter is DC 0 ± 1 mV.

5-2. ADJUSTMENT OF PB AMP OFF-SET

1) Connect the digital DC voltmeter between TP101 (PB AMP OFF-SET) and TP (GND).
2) Set the REC LEVEL control to "MIN" position, and record with no signal input condition.
3) After recording, read the voltage on the digital DC voltmeter, then push the PB button on the front panel and read the voltage again.
4) Adjust VR101 (VOICE 1 PB AMP OFF-SET) so that the both reading voltages are equal or the voltages difference is within ±5 mV.
5) Adjust VR201 (VOICE 2 PB AMP OFF-SET) to VR801 (VOICE 8 PB AMP OFF-SET) as same maner as 1) to 4).

Downloaded from www.Manualslib.com manuals search engine

VI. DISASSEMBLY AND ASSEMBLY OF FDD BLOCK

6-1. FDD COVER

6-1-1. REMOVAL

1) Set up the FDD as shown Fig. 6-1 then insert a regular screwdriver a little into position A and B and try to slightly lift it in order to remove the FDD cover.

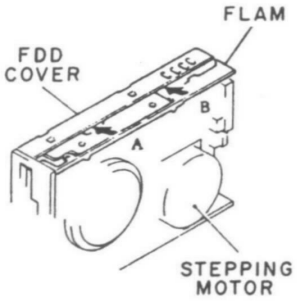

Fig. 6-1

6-1-2. INSTALLATION

1) Catching one side of the FDD cover on the side plate as shown Fig. 6-2, install it to main body.

NOTE: When installing, be careful not to damage the FRONT BEZEL and other parts.

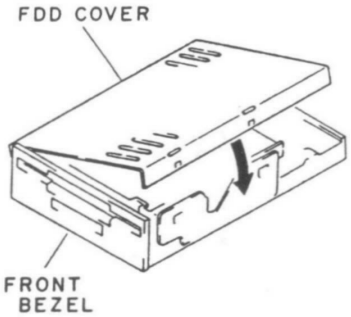

Fig. 6-2

6-2. DISK HOLDER ASSY

6-2-1. REMOVAL

1) Remove the FDD COVER as in 6-1-1.
2) Install the FRONT BEZEL assy from the FDD front side (Disk holder side). Remove two screws (Bind 2.6 × 5) and remove FRONT BEZEL assy. (Refer to Fig. 6-3)

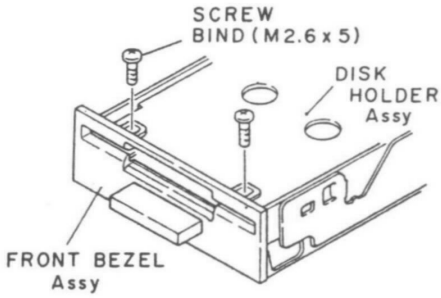

Fig. 6-3

3) Unlock the eject hook and remove the disk holder assy by trying to lift up its front portion while pressing the button to near the middle. (Refer to Fig. 6-4)

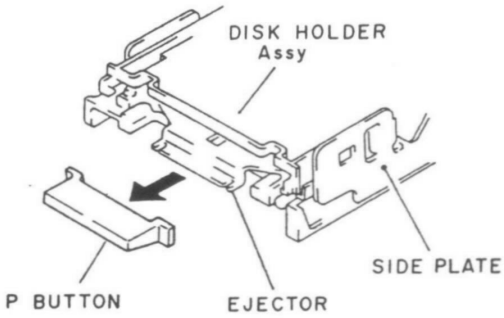

Fig. 6-4

6-2-2. INSTALLATION

1) Press the P button in order to lock the eject hook.
2) Install the disk holder assy from behind and unlock the eject hook. At this time, press P button near the middle with hand.

Downloaded from www.Manualslib.com manuals search engine

6-3. INSERT SPRING, EJECT LEVER AND EJECT LEVER SPRING

6-3-1. REMOVAL

1) Remove the FDD cover. (Refer to 6-1-1)
2) Remove the disk holder assy. (Refer to 6-2-1)
3) Remove the insert spring, eject lever and eject lever spring from the disk holder assy. (Refer to Fig. 6-5)

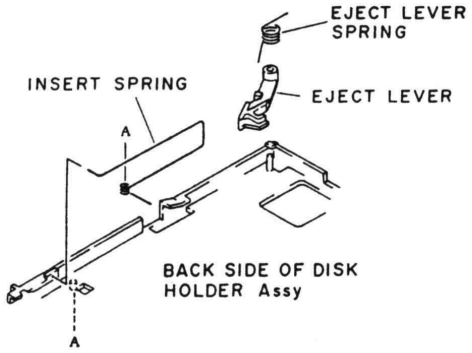

Fig. 6-5

6-3-2. INSTALLATION

1) Install the insert spring to the disk holder. At this time, use a plier to bend the tip of the spring A, as shown in Fig. 6-6.

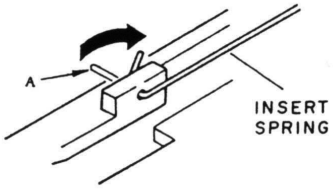

Fig. 6-6

2) Install the eject lever and eject lever spring to the disk holder. (At this time, pay attention to the length of the spring.)
3) Install the disk holder assy into the FDD. (Refer to 6-2-1)
4) Install the FDD cover. (Refer to 6-1-1)

6-4. ROLLER

6-4-1. REMOVAL

1) Remove the FDD cover. (Refer to 6-1-1)
2) Remove the disk holder assy. (Refer to 6-2-1)
3) Remove the roller from the disk holder assy. (Refer to Fig. 6-7)

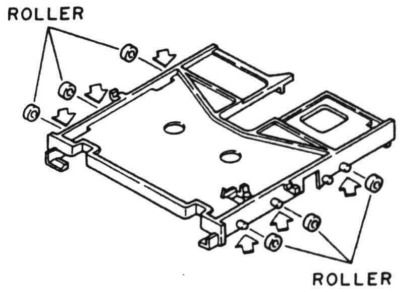

Fig. 6-7

6-4-2. INSTALLATION

1) Apply grease to the disk holder assy at six places (Refer to Fig. 6-7) and install the roller.
2) Install the disk holder to the FDD. (Refer to 2-2)
3) Install the FDD cover. (Refer to 6-1-2)

6-5. EJECTOR AND EJECTOR SPRING

6-5-1. REMOVAL

1) Remove the FDD cover. (Refer to 6-1-1)
2) Remove the disk holder assy. (Refer to 6-2-1)
3) Remove the ejector spring.
4) Remove the thrust washers from three places and remove the ejector.

6-5-2. INSTALLATION

1) As shown in Fig. 6-8, install the thrust washer to the frame and install the ejector and then use the thrust washer and cut washer to secure.

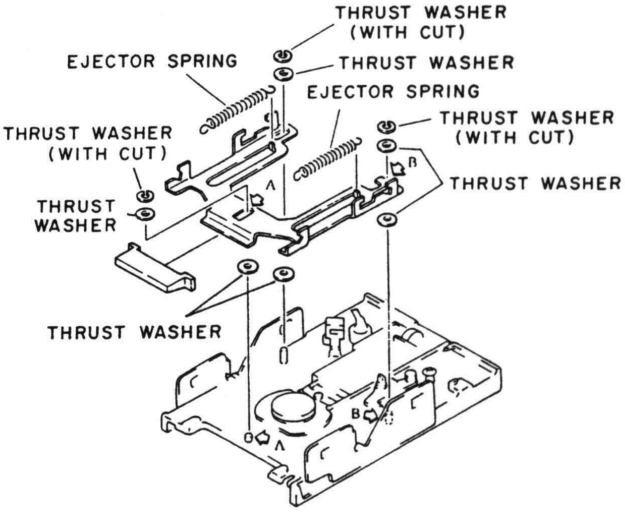

Fig. 6-8

2) Install the ejector spring.
3) Install the P button the ejector.
4) Apply grease to two places, A and B in Fig. 6-8.
5) Install the disk holder assy to the FDD. (Refer to 6-2-2)
6) Install the FDD cover. (Refer to 6-1-2)

Downloaded from www.Manualslib.com manuals search engine

VII. MIDI IMPLEMENTATION CHART

[MIDI DIGITAL SAMPLER]

Model S900 MIDI Implementation Chart Version: 1.0

Function ...	Transmitted	Recognized	Remarks
Basic Channel Default	×	1	Without Disk
Basic Channel Changed	×	1 – 16	Memorized (Disk)
Mode Default	×	Mode 1	Without Disk
Mode		Mode 1 – 4	Memorized (Disk)
Mode Messages	×	Omni on/off, P/M	
Mode Altered	**********	×	
Note Number	×	0 – 127	
Note Number : True voice	**********	24 – 96	
Velocity Note ON	×	○ 9n V = 1 – 127	
Velocity Note OFF	×	○ 9n V = 0 or 8n V = 1 – 127	Used Velocity release
After Touch Key's	×	×	
After Touch Ch's	×	○	
Pitch Bender	×	○	0 – 12: Half tone step (7 bit)
Control Change 1	×	○	Modulation wheel
Control Change 64	×	○	Damper pedal
Prog Change	×	1 – 32	by Preset number value
Prog Change : True #	**********	1 – 32	
System Exclusive	○	○	ID: 47
System Common : Song Pos	×	×	
System Common : Song Sel	×	×	
System Common : Tune	×	×	
System Real Time : Clock	×	×	
System Real Time : Commands	×	×	
Aux Messages : Local ON/OFF	×	×	
Aux Messages : All Notes OFF	×	○ (123)	
Aux Messages : Active Sense	×	×	
Aux Messages : Reset	×	×	
Notes			

Mode 1: OMNI ON, POLY
Mode 2: OMNI ON, MONO
Mode 3: OMNI OFF, POLY
Mode 4: OMNI OFF, MONO

○: Yes
×: No

Downloaded from www.Manualslib.com manuals search engine

VIII. PARTS LIST

ATTENTION

1. **When placing an order for parts, be sure to list Part No., Model No. and the description of each part. Otherwise, the non-delivery of the part or the delivery of a wrong part may result.**
2. **Please make sure that Part No. is correct when ordering.**
   If not, a part different from the one you ordered may be delivered.
3. **Since the parts shown in Parts List of Preliminary Service Manual may have been the subject of changes, please use this Parts List for all future reference.**

HOW TO USE THIS PARTS LIST

1. This Parts List lists those parts which are considered necessary for repairs. Other common parts, such as resistors and capacitors, are listed in the "Common List for Service Parts" from which these parts should be selected and stocked.
2. The Recommended Spare Parts List shows those parts in the Parts List which are considered particularly important for service.
3. Parts not shown in the Parts List and "Common List for Service Parts" will not in principle be supplied.
4. How to read the Parts List.

a) Mechanism Block

2. HEAD BASE BLOCK

REF. NO.	PART NO.	DESCRIPTION
2-1x	BH-T2023A320A	HEAD BASE BLOCK
2-2	HP-H2206A010A	HEAD R/P PR4-8FU C
2-3	ZS-477876	PAN20×03STL CMT
2-4	ZS-536488	BID20×08STL CMT
2-5	ZG-402895	SP CS ANGLE ADJUST

SP (Service Parts) Classification

A small "x" indicates that this part is not shown in the Photo or Illustration.

This number corresponds with the individual parts index number in that figure.

This number corresponds with the Figure Number.

b) PC Board

6. MAIN PC BOARD

REF. NO.	PART NO.	DESCRIPTION
6-IC1	EI-324536	IC HD14049BP
6-IC2	EI-336801	IC MB8841-564M
6-C1A	EC-338399	C MMY V 223M 250AC [U,E,B,S]
6-C1B	EC-350949	C MMY V 223M 250DC [J]
6-C1C	EC-338397	C MMY V 223M 125AC [C,A]
6-X1	EI-318384	OSC X'TAL NC-18C

Symbols for primary destination

[A]: AAL(U.S.A.) [S]: SAA(Australia)
[B]: BEAB(England) [U]: U/T(Universal Area)
[C]: CSA(Canada) [V]: VDE(W. Germany)
[E]: CEE(Europe) [Y]: Custom Version
[J]: JPN(Japan)

SP (Service Parts) Classification

These reference symbols correspond with component symbols in the Schematic Diagrams.

The available PC Board Blocks are listed separately.

5. When Part No. is known, Parts Index at end of Parts List can be used to locate where that part is shown in Parts List by its Reference No. listed at right of Part No.

WARNING

⚠ (*) INDICATES SAFETY CRITICAL COMPONENTS. FOR CONTINUED SAFETY, REPLACE SAFETY CRITICAL COMPONENTS ONLY WITH MANUFACTURE'S RECOMMENDED PARTS.

AVERTISSEMENT

⚠ (*) IL INDIQUE LES COMPOSANTS CRITIQUES DE SÉCURITÉ. POUR MAINTENIR LE DEGRÉ DE SÉCURITÉ DE L'APPAREIL, NE REMPLACER QUE DES PIÉCES RECOMMANDEES PAR LÉ FABRICANT.

Downloaded from www.Manualslib.com manuals search engine

RECOMMENDED SPARE PARTS LIST

Because, if the parts listed below are on hand, almost any repair can be accomplished, we suggest that you stock these Recommended Spare Parts Items.

REF. NO.	PART NO.	DESCRIPTION
1	BM-718237	MOTOR DD D355 BLK
2	BT-365907	⚠ TRANS POWER S900T-10 (J)
3	BT-365908	⚠ TRANS POWER S900T-30 (A, C)
4	BT-365909	⚠ TRANS POWER S900T-50 (E, V, B, S)
5	ED-365819	⚠ D SILICON CTU-12R
6	ED-365818	⚠ D SILICON CTU-12S
7	ED-330319	⚠ D SILICON DBA10B 100/1.0A
8	ED-357038	⚠ D SILICON DBB10B 100/1.0A
9	ED-364261	D LED SLP-981C-50
10	ED-301911	D SILICON H DS448
11	ED-346617	D ZENER H HZ12 C2
12	EF-355226	⚠ FUSE BET T 1.00A 250V [B]
13	EF-359225	⚠ FUSE BET T 3.15A 250V [B]
14	EF-358974	⚠ FUSE BET T 630MA 250V [B]
15	EF-358641	⚠ FUSE BET T 800MA 250V [B]
16	EF-623103	⚠ FUSE SEMKO T 1.00A 250V [E,V,S]
17	EF-691007	⚠ FUSE SEMKO T 3.15A 250V [E,V,S]
18	EF-601942	⚠ FUSE SEMKO T 630MA 250V [E,V,S]
19	EF-258344	⚠ FUSE SEMKO T 800MA 250V [E,V,S]
20	EF-309387	⚠ FUSE TSC A 250V 1.00A [J]
21	EF-306951	⚠ FUSE TSC A 250V 2.50A [J]
22	EF-306952	⚠ FUSE TSC A 250V 4.00A [J]
23	EF-306124	⚠ FUSE TSC A 250V 630MA [J]
24	EF-310229	⚠ FUSE TSC 125V 1.00A [C,A]
25	EF-306954	⚠ FUSE TSC 125V 2.00A [C,A]
26	EF-306957	⚠ FUSE TSC 125V 4.00A [C,A]
27	EF-305703	⚠ FUSE TSC 125V 630MA [C,A]
28	EI-348123	⚠ IC M5230L
29	EI-365822	⚠ IC NJM78M06A
30	EI-365823	⚠ IC NJM79M06A
31	EI-365820	⚠ IC STR9005
32	EI-347758	⚠ IC TA78012AP
33	EI-360049	IC AM2504PC
34	EI-354283	IC BA6110
35	EI-390060	IC BA9201
36	EI-360050	IC BA9221
37	EI-360045	IC DG211CJ
38	EI-718240	IC HA13421
39	EI-360021	IC HD6850P
40	EI-355887	IC HD74LS04P
41	EI-355888	IC HD74LS08P
42	EI-355892	IC HD74LS38P
43	EI-365804	IC HD7406P
44	EI-365806	IC HD75188P
45	EI-365805	IC HD75189P
46	EI-360954	IC IR9311
47	EI-360058	IC MF6CN-50
48	EI-365239	IC MN41256-12
49	EI-718239	IC M51017P
50	EI-360043	IC M5220P
51	EI-360565	IC M5223P
52	EI-362588	IC M5238P
53	EI-365798	IC SED9420CAC
54	EI-310044	IC SN74LS05N
55	EI-365792	IC S900 A
56	EI-365793	IC S900 B
57	EI-365794	IC S900 C
58	EI-365795	IC S900 D
59	EI-365796	IC S900 E
60	EI-360037	IC TC74HC00P
61	EI-360038	IC TC74HC02P
62	EI-360026	IC TC74HC04P
63	EI-360039	IC TC74HC08P
64	EI-365846	IC TC74HC109P
65	EI-360025	IC TC74HC138P
66	EI-356049	IC TC74HC139P
67	EI-360035	IC TC74HC157P
68	EI-365810	IC TC74HC158P
69	EI-360048	IC TC74HC173P
70	EI-360053	IC TC74HC175P
71	EI-365802	IC TC74HC191P
72	EI-360029	IC TC74HC244P
73	EI-360032	IC TC74HC245P
74	EI-365801	IC TC74HC257P
75	EI-360042	IC TC74HC259P
76	EI-365809	IC TC74HC283P
77	EI-360036	IC TC74HC32P
78	EI-360030	IC TC74HC373P
79	EI-360047	IC TC74HC374P
80	EI-365831	IC TC74HC393P
81	EI-365803	IC TC74HC4002P
82	EI-365830	IC TC74HC670P
83	EI-360027	IC TC74HC86P
84 N	EI-367331-C	IC TMM27128AD-20 S900LSB-V 1.2A
85 N	EI-367330-C	IC TMM27128AD-20 S900MSB-V 1.2A
86 N	EI-367194	IC TMM2764D-2-S900-V 1.0 Custom
87	EI-365829	IC μPC812C-AK
88	EI-361275	IC μPD71054C
89	EI-365813	IC μPD71055C
90	EI-365797	IC μPD7265C
91	EI-354146	IC μPD8253C-2
92	EI-718241	IC 74LS93
93	EI-365811	OSC X'TAL NR18 16.000MHz
94	EM-365844	IND LCD DMC40218UE
95	EQ-348929	RELAY SIGNAL G5A-232P 2TR 12V
96	ER-326169	⚠ R FUSE ERD2FC S10 1/4W 22R0G
97	ER-337754	⚠ R OMF H S15 FS 1W 100J
98	ER-356747	⚠ R OMF H S15 FS 1W 820J
99	ES-337902	⚠ SW PUSH SDLD1P 01-1
100	ES-306430	⚠ SW SLIDE J-S4013#01 01-2 [E,V,B,S]
101	ES-718243	SW REED
102	ET-356817	⚠ TR 2SB891 Q, R
103	ET-354083	⚠ TR 2SD1189 Q, R
104 N	ET-354167	PHOTO SENSOR NJL5127D
105	ET-353899	TR 2SA1317 S, T, U
106	ET-360067	TR 2SC3330 T, U F05
107	ET-360067	TR 2SC3330 T, U F05
108	EV-307695	R S-FIX H RH0651C15 3P 0.05W 104
109	EV-718242	R S-FIX VRP0016-204BIM
110	EV-365817	VR ROTARY 16P10×2G B102
111	EV-365952	VR ROTARY 16P10×2H B103
112	EV-366285	VR ROTARY 16P10×2I A103
113	EV-365953	VR ROTARY 16P22×0Z B103 B103

1. FLOPPLY DISK DRIVE BLOCK

Ref. No.	Part No.	Description
1-1	BB-365944-A	FDD D357 (FLOPPY DISK DRIVE UNIT)
1-2	MZ-718224	HOLDER DISK D350
1-3	ML-718225	LEVER EJECT
1-4	ZG-718226	SP LEVER EJECT
1-5	ZG-718227	SP INSERT
1-6	BA-718228	PC D355 BLK
1-9	SK-718229	KNOB P
1-10	SP-718230	PANEL FRONT D350
1-11	SZ-718231	LENZ LED(B)
1-17	MZ-718232	HOOK EJECT
1-18	ZG-718234	SP HOOK EJECT(B)
1-20	MR-718235	ROLLER
1-21	ZG-718236	SP EJECTOR
1-34	BM-718237	MOTOR DD D355 BLK
1-37	ZS-718238	SCREW BIND

Downloaded from www.Manualslib.com manuals search engine

FLOPPY DISK DRIVE BLOCK

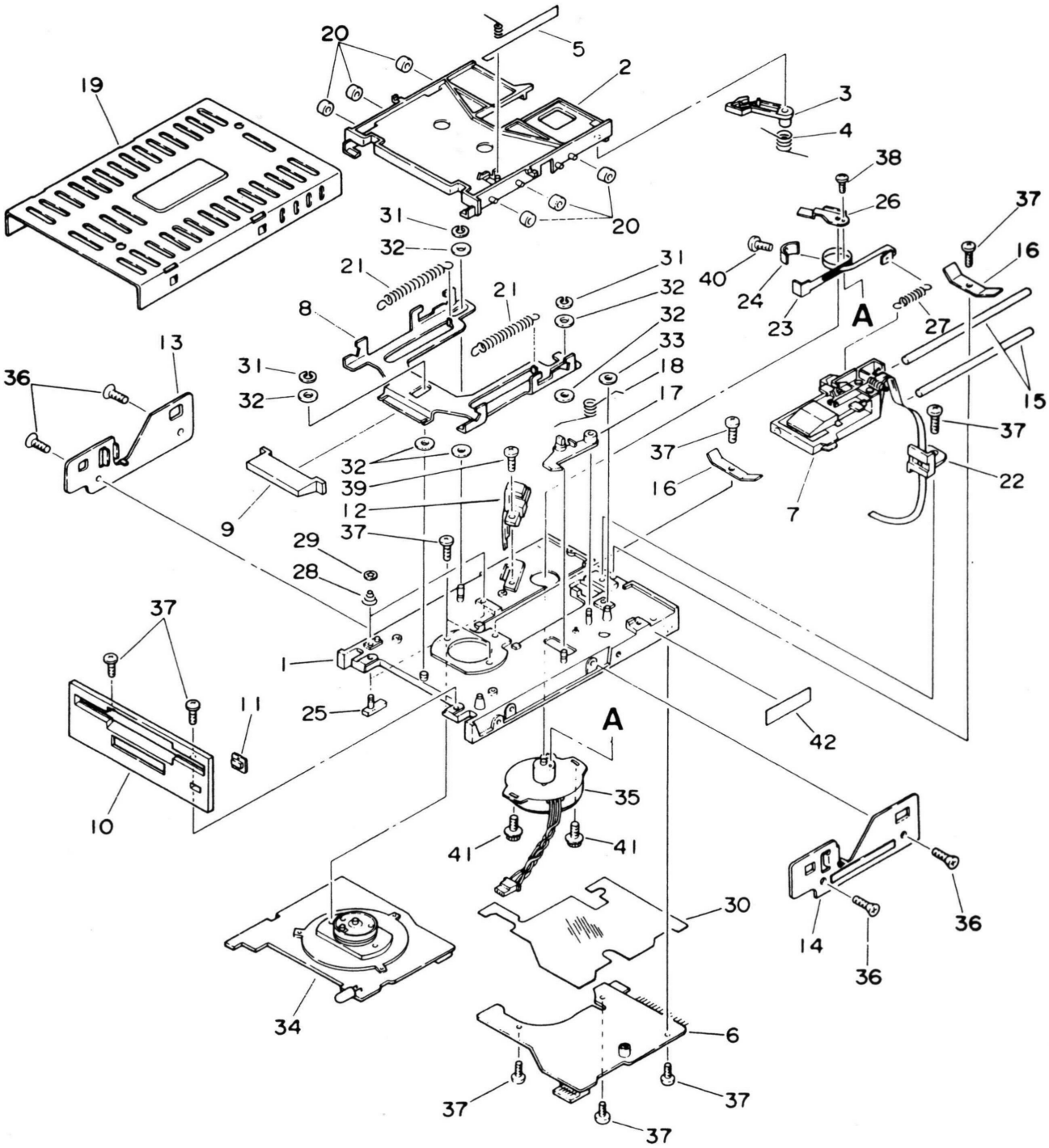

Downloaded from www.Manualslib.com manuals search engine

2. P.C BOARD BLOCK

Ref. No.	Part No.	Description
2-1	BA-L6002A050A	PC VOICE BLK S900
2-2	BA-L6002A040A	PC CPU BLK S900
2-3	BA-L6002A020A	PC PANEL BLK S900
2-4	BA-L6002A080A	PC JACK BLK S900
2-5	BA-L6002A060A	POWER BLK S900

NOTE: (1) PC PANEL BLK includes following PC BOARDS.
*OPERATION PC BOARD *CONTRAST VR PC BOARD
*LED PC BOARD

(2) PC JACK BLK includes following PC BOARDS.
*OUTPUT JACK PAC BOARD *INPUT JACK PC BOARD
*INVERTER PC BOARD *VR PC BOARD
*MIDI JACK PC BOARD *COMMUNICATION BUS PC BOARD

3. VOICE P.C BOARD

Ref. No.	Part No.	Description
3-C5	EC-360719	C PP V S05 CQMFS92 101J 50DC
3-C6	EC-360719	C PP V S05 CQMFS92 101J 50DC
3-C10	EC-360719	C PP V S05 CQMFS92 101J 50DC
3-C21	EC-360716	C PP V S05 CQMFS92 391J 50DC
3-C109	EC-360719	C PP V S05 CQMFS92 101J 50DC
3-C209	EC-360719	C PP V S05 CQMFS92 101J 50DC
3-C309	EC-360719	C PP V S05 CQMFS92 101J 50DC
3-C409	EC-360719	C PP V S05 CQMFS92 101J 50DC
3-C509	EC-360719	C PP V S05 CQMFS92 101J 50DC
3-C609	EC-360719	C PP V S05 CQMFS92 101J 50DC
3-C709	EC-360719	C PP V S05 CQMFS92 101J 50DC
3-C809	EC-360719	C PP V S05 CQMFS92 101J 50DC
3-D1	ED-301911	D SILICON H DS448
3-IC1	EI-360043	IC M5220P
3-IC2	EI-362588	IC M5238P
3-IC3	EI-362588	IC M5238P
3-IC4	EI-365829	IC UPC812C-AK
3-IC6	EI-360954	IC IR9311
3-IC7	EI-360058	IC MF6CN-50
3-IC8	EI-360045	IC DG211CJ
3-IC9	EI-360050	IC BA9221
3-IC10	EI-360049	IC AM2504PC
3-IC11	EI-360048	IC TC74HC173P
3-IC12	EI-360047	IC TC74HC374P
3-IC13	EI-365846	IC TC74HC109P
3-IC14	EI-360038	IC TC74HC02P
3-IC15	EI-360047	IC TC74HC374P
3-IC16	EI-360047	IC TC74HC374P
3-IC17	EI-360029	IC TC74HC244P
3-IC18	EI-360026	IC TC74HC04P
3-IC19	EI-361275	IC UPD71054C
3-IC20	EI-361275	IC UPD71054C
3-IC21	EI-361275	IC UPD71054C
3-IC22	EI-354146	IC UPD8253C-2
3-IC23	EI-354146	IC UPD8253C-2
3-IC24	EI-354146	IC UPD8253C-2
3-IC25	EI-362588	IC M5238P
3-IC26	EI-362588	IC M5238P
3-IC27	EI-362588	IC M5238P
3-IC101	EI-365830	IC TC74HC670P
3-IC102	EI-365830	IC TC74HC670P
3-IC103	EI-365830	IC TC74HC670P
3-IC104	EI-365831	IC TC74HC393P
3-IC105	EI-360038	IC TC74HC02P
3-IC106	EI-360027	IC TC74HC86P
3-IC107	EI-360050	IC BA9221
3-IC108	EI-390060	IC BA9201
3-IC109	EI-360058	IC MF6CN-50
3-IC110	EI-354283	IC BA6110
3-IC111	EI-360565	IC M5223P
3-IC201	EI-365830	IC TC74HC670P
3-IC202	EI-365830	IC TC74HC670P
3-IC203	EI-365830	IC TC74HC670P
3-IC204	EI-365831	IC TC74HC393P
3-IC205	EI-360038	IC TC74HC02P
3-IC206	EI-360027	IC TC74HC86P
3-IC207	EI-360050	IC BA9221
3-IC208	EI-390060	IC BA9201
3-IC209	EI-360058	IC MF6CN-50
3-IC210	EI-354283	IC BA6110
3-IC211	EI-360565	IC M5223P
3-IC301	EI-365830	IC TC74HC670P
3-IC302	EI-365830	IC TC74HC670P
3-IC303	EI-365830	IC TC74HC670P
3-IC304	EI-365831	IC TC74HC393P
3-IC305	EI-360038	IC TC74HC02P
3-IC306	EI-360027	IC TC74HC86P
2-IC307	EI-360050	IC BA9221
3-IC308	EI-390060	IC BA9201
3-IC309	EI-360058	IC MF6CN-50
3-IC310	EI-354283	IC BA6110
3-IC311	EI-360565	IC M5223P
3-IC401	EI-365830	IC TC74HC670P
3-IC402	EI-365830	IC TC74HC670P
3-IC403	EI-365830	IC TC74HC670P
3-IC404	EI-365831	IC TC74HC393P
3-IC405	EI-360038	IC TC74HC02P
3-IC406	EI-360027	IC TC74HC86P
3-IC407	EI-360050	IC BA9221
3-IC408	EI-390060	IC BA9201
3-IC409	EI-360058	IC MF6CN-50
3-IC410	EI-354283	IC BA6110
3-IC411	EI-360565	IC M5223P
3-IC501	EI-365830	IC TC74HC670P
3-IC502	EI-365830	IC TC74HC670P
3-IC503	EI-365830	IC TC74HC670P
3-IC504	EI-365831	IC TC74HC393P
3-IC505	EI-360038	IC TC74HC02P
3-IC506	EI-360027	IC TC74HC86P
3-IC507	EI-360050	IC BA9221
3-IC508	EI-390060	IC BA9201
3-IC509	EI-360058	IC MF6CN-50
3-IC510	EI-354283	IC BA6110
3-IC511	EI-360565	IC M5223P
3-IC601	EI-365830	IC TC74HC670P
3-IC602	EI-365830	IC TC74HC670P
3-IC603	EI-365830	IC TC74HC670P
3-IC604	EI-365831	IC TC74HC393P
3-IC605	EI-360038	IC TC74HC02P
3-IC606	EI-360027	IC TC74HC86P
3-IC607	EI-360050	IC BA9221
3-IC608	EI-390060	IC BA9201
3-IC609	EI-360058	IC MF6CN-50
3-IC610	EI-354283	IC BA6110
3-IC611	EI-360565	IC M5223P
3-IC701	EI-365830	IC TC74HC670P
3-IC702	EI-365830	IC TC74HC670P
3-IC703	EI-365830	IC TC74HC670P
3-IC704	EI-365831	IC TC74HC393P
3-IC705	EI-360038	IC TC74HC02P
3-IC706	EI-360027	IC TC74HC86P
3-IC707	EI-360050	IC BA9221
3-IC708	EI-390060	IC BA9201
3-IC709	EI-360058	IC MF6CN-50
3-IC710	EI-354283	IC BA6110
3-IC711	EI-360565	IC M5223P
3-IC801	EI-365830	IC TC74HC670P
3-IC802	EI-365830	IC TC74HC670P
3-IC803	EI-365830	IC TC74HC670P
3-IC804	EI-365831	IC TC74HC393P
3-IC805	EI-360038	IC TC74HC02P
3-IC806	EI-360027	IC TC74HC86P
3-IC807	EI-360050	IC BA9221
3-IC808	EI-390060	IC BA9201
3-IC809	EI-360058	IC MF6CN-50
3-IC810	EI-354283	IC BA6110
3-IC811	EI-360565	IC M5223P
3-RL1	EQ-348929	RELAY SIGNAL G5A-232P 2TR 12V
3-RL2	EQ-348929	RELAY SIGNAL G5A-232P 2TR 12V
3-R7	ER-362495	R OMF H S10 FS 1/2W 101J
3-R8	ER-362495	R OMF H S10 FS 1/2W 101J
3-R29	ER-324185	R CB H S10 FS RDS 1/4W 221J
3-R30	*ER-326169	R FUSE ERD2FC S10 1/4W 22R0G
3-R31	ER-365788	R MF H F10 1/4W 2491F
3-R32	ER-365789	R MF H F10 1/4W 4991F
3-R58	*ER-356747	R OMF H S15 FS 1W 820J

Downloaded from www.Manualslib.com manuals search engine

Ref. No.	Part No.	Description
3-R121	ER-324185	R CB H S10 FS RDS 1/4W 221J
3-R202	ER-365788	R MF H F10 1/4W 2491F
3-R203	ER-365789	R MF H F10 1/4W 4991F
3-R221	ER-324185	R CB H S10 FS RDS 1/4W 221J
3-R302	ER-365788	R MF H F10 1/4W 2491F
3-R303	ER-365789	R MF H F10 1/4W 4991F
3-R321	ER-324185	R CB H S10 FS RDS 1/4W 221J
3-R402	ER-365788	R MF H F10 1/4W 2491F
3-R403	ER-365789	R MF H F10 1/4W 4991F
3-R421	ER-324185	R CB H S10 FS RDS 1/4W 221J
3-R502	ER-365788	R MF H F10 1/4W 2491F
3-R503	ER-365789	R MF H F10 1/4W 4991F
3-R521	ER-324185	R CB H S10 FS RDS 1/4W 221J
3-R602	ER-365788	R MF H F10 1/4W 2491F
3-R603	ER-365789	R MF H F10 1/4W 4991F
3-R621	ER-324185	R CB H S10 FS RDS 1/4W 221J
3-R702	ER-365788	R MF H F10 1/4W 2491F
3-R703	ER-365789	R MF H F10 1/4W 4991F
3-R721	ER-324185	R CB H S10 FS RDS 1/4W 221J
3-R802	ER-365788	R MF H F10 1/4W 2491F
3-R803	ER-365789	R MF H F10 1/4W 4991F
3-R821	ER-324185	R CB H S10 FS RDS 1/4W 221J
3-TR1	ET-360067	TR 2SC3330 T,U F05
3-TR101	ET-353899	TR 2SA1317 S,T,U
3-TR201	ET-353899	TR 2SA1317 S,T,U
3-TR301	ET-353899	TR 2SA1317 S,T,U
3-TR401	ET-353899	TR 2SA1317 S,T,U
3-TR501	ET-353899	TR 2SA1317 S,T,U
3-TR601	ET-353899	TR 2SA1317 S,T,U
3-TR701	ET-353899	TR 2SA1317 S,T,U
3-TR801	ET-353899	TR 2SA1317 S,T,U
3-VR1	EV-307695	R S-FIX H RH0651C15 3P 0.05W 104
3-VR101	EV-307695	R S-FIX H RH0651C15 3P 0.05W 104
3-VR201	EV-307695	R S-FIX H RH0651C15 3P 0.05W 104
3-VR301	EV-307695	R S-FIX H RH0651C15 3P 0.05W 104
3-VR401	EV-307695	R S-FIX H RH0651C15 3P 0.05W 104
3-VR501	EV-307695	R S-FIX H RH0651C15 3P 0.05W 104
3-VF601	EV-307695	R S-FIX H RH0651C15 3P 0.05W 104
3-VR701	EV-307695	R S-FIX H RH0651C15 3P 0.05W 104
3-VR801	EV-307695	R S-FIX H RH0651C15 3P 0.05W 104

4. CPU P.C BOARD

Ref. No.	Part No.	Description
4-D1	ED-301911	D SILICON H DS448
4-IC1	EI-365792	IC S900 A
4-IC2	EI-365793	IC S900 B
4-IC3	EI-365794	IC S900 C
4-IC4	EI-365794	IC S900 C
4-IC5	EI-365794	IC S900 C
4-IC6	EI-365795	IC S900 D
4-IC7	EI-365796	IC S900 E
4-IC8	EI-360021	IC HD6850P
4-IC9	EI-365797	IC UPD7265C
4-IC10	EI-365798	IC SED9420CAC
4-IC11	EI-367330-C	IC TMM27128AD-20 S900MSB-V1.2A
4-IC12	EI-367331-C	IC TMM27128AD-20 S900LSB-V1.2A
4-IC13	EI-360030	IC TC74HC373P
4-IC14	EI-360030	IC TC74HC373P
4-IC15	EI-360030	IC TC74HC373P
4-IC16	EI-360030	IC TC74HC373P
4-IC17	EI-360030	IC TC74HC373P
4-IC18	EI-360032	IC TC74HC245P
4-IC19	EI-365831	IC TC74HC393P
4-IC20	EI-365801	IC TC74HC257P
4-IC21	EI-360053	IC TC74HC175P
4-IC22	EI-360025	IC TC74HC138P
4-IC23	EI-360025	IC TC74HC138P
4-IC24	EI-360025	IC TC74HC138P
4-IC25	EI-360042	IC TC74HC259P
4-IC26	EI-360029	IC TC74HC244P
4-IC27	EI-365801	IC TC74HC257P
4-IC28	EI-365802	IC TC74HC191P
4-IC29	EI-356049	IC TC74HC139P
4-IC30	EI-360053	IC TC74HC175P
4-IC31	EI-365803	IC TC74HC4002P
4-IC32	EI-360026	IC TC74HC04P
4-IC33	EI-360036	IC TC74HC32P
4-IC34	EI-360036	IC TC74HC32P
4-IC35	EI-360037	IC TC74HC00P
4-IC36	EI-360037	IC TC74HC00P
4-IC37	EI-360039	IC TC74HC08P
4-IC38	EI-365804	IC HD7406P
4-IC39	EI-355889	IC HD74LS14P
4-IC40	EI-355892	IC HD74LS38P
4-IC41	EI-355888	IC HD74LS08P
4-IC42	EI-355887	IC HD74LS04P
4-IC43	EI-365805	IC HD75189P
4-IC44	EI-365806	IC HD75188P
4-IC45	EI-365239	IC MN41256-12
4-IC46	EI-365239	IC MN41256-12
4-IC47	EI-365239	IC MN41256-12
4-IC48	EI-365239	IC MN41256-12
4-IC49	EI-365239	IC MN41256-12
4-IC50	EI-365239	IC MN41256-12
4-IC51	EI-365239	IC MN41256-12
4-IC52	EI-365239	IC MN41256-12
4-IC53	EI-365239	IC MN41256-12
4-IC54	EI-365239	IC MN41256-12
4-IC55	EI-365239	IC MN41256-12
4-IC56	EI-365239	IC MN41256-12
4-IC57	EI-365239	IC MN41256-12
4-IC58	EI-365239	IC MN41256-12
4-IC59	EI-365239	IC MN41256-12
4-IC60	EI-365239	IC MN41256-12
4-IC61	EI-365239	IC MN41256-12
4-IC62	EI-365239	IC MN41256-12
4-IC63	EI-365239	IC MN41256-12
4-IC64	EI-365239	IC MN41256-12
4-IC65	EI-365239	IC MN41256-12
4-IC66	EI-365239	IC MN41256-12
4-IC67	EI-365239	IC MN41256-12
4-IC68	EI-365239	IC MN41256-12
4-IC69	EI-365239	IC MN41256-12
4-IC70	EI-365239	IC MN41256-12
4-IC71	EI-365239	IC MN41256-12
4-IC72	EI-365239	IC MN41256-12
4-IC73	EI-367194	IC TMM2764D-2-S900-V1.0
4-IC74	EI-367194	IC TMM2764D-2-S900-V1.0
4-IC75	EI-367194	IC TMM2764D-2-S900-V1.0
4-IC76	EI-365809	IC TC74HC283P
4-IC77	EI-365809	IC TC74HC283P
4-IC78	EI-365809	IC TC74HC283P
4-IC79	EI-365801	IC TC74HC257P
4-IC80	EI-365801	IC TC74HC257P
4-IC81	EI-365801	IC TC74HC257P
4-IC82	EI-360035	IC TC74HC157P
4-IC83	EI-365810	IC TC74HC158P
4-IC84	EI-365810	IC TC74HC158P
4-IC85	EI-360039	IC TC74HC08P
4-IC86	EI-360026	IC TC74HC04P
4-IC87	EI-360038	IC TC74HC02P
4-IC88	EI-360036	IC TC74HC32P
4-IC89	EI-360053	IC TC74HC175P
4-IC90	EI-360039	IC TC74HC08P
4-R30	ER-200939	R CB H S10 FS RDS 1/4W 181J
4-R31	ER-200939	R CB H S10 FS RDS 1/4W 181J
4-X1	EI-365811	OSC X'TAL NR18 16.000MHZ
4-1	EJ-358691	SOCKET IC DILB28P-8J

Downloaded from www.Manualslib.com manuals search engine

5. PANEL P.C BOARD

Ref. No.	Part No.	Description
5-CR1	EH-347688	COMP R EXB-P88472K
5-CR2	EH-347688	COMP R EXB-P88472K
5-D1	ED-364261	D LED SLP-981C-50
5-D2	ED-364261	D LED SLP-981C-50
5-D3	ED-364261	D LED SLP-981C-50
5-D4	ED-364261	D LED SLP-981C-50
5-D5	ED-364261	D LED SLP-981C-50
5-D6	ED-364261	D LED SLP-981C-50
5-D7	ED-364261	D LED SLP-981C-50
5-IC1	EI-365813	IC UPD71055C
5-SW1	ES-365851	SW TACT SPPQ19
5-SW2	ES-365851	SW TACT SPPQ19
5-SW3	ES-365851	SW TACT SPPQ19
5-SW4	ES-365851	SW TACT SPPQ19
5-SW6	ES-365851	SW TACT SPPQ19
5-SW7	ES-365851	SW TACT SPPQ19
5-SW8	ES-365851	SW TACT SPPQ19
5-SW9	ES-365851	SW TACT SPPQ19
5-SW10	ES-365851	SW TACT SPPQ19
5-SW11	ES-365851	SW TACT SPPQ19
5-SW12	ES-365851	SW TACT SPPQ19
5-SW13	ES-365851	SW TACT SPPQ19
5-SW14	ES-365851	SW TACT SPPQ19
5-SW16	ES-365851	SW TACT SPPQ19
5-SW17	ES-365851	SW TACT SPPQ19
5-SW18	ES-365851	SW TACT SPPQ19
5-SW19	ES-365851	SW TACT SPPQ19
5-SW20	ES-365851	SW TACT SPPQ19
5-SW21	ES-365851	SW TACT SPPQ19
5-SW22	ES-365851	SW TACT SPPQ19
5-SW23	ES-365851	SW TACT SPPQ19
5-SW24	ES-365851	SW TACT SPPQ19
5-SW25	ES-365851	SW TACT SPPQ19
5-SW26	ES-365851	SW TACT SPPQ19
5-SW27	ES-365851	SW TACT SPPQ19
5-SW28	ES-365851	SW TACT SPPQ19

6. OUTPUT JACK P.C BOARD

Ref. No.	Part No.	Description
6-J501	EJ-354269	PHONE J 3P HLJ0540-110 6.3
6-J502	EJ-354269	PHONE J 3P HLJ0540-110 6.3
6-J503	EJ-354269	PHONE J 3P HLJ0540-110 6.3
6-J505	EJ-354269	PHONE J 3P HLJ0540-110 6.3
6-J505	EJ-354269	PHONE J 3P HLJ0540-110 6.3
6-J506	EJ-354269	PHONE J 3P HLJ0540-110 6.3
6-J507	EJ-354269	PHONE J 3P HLJ0540-110 6.3
6-J508	EJ-354269	PHONE J 3P HLJ0540-110 6.3
6-J509	EJ-354269	PHONE J 3P HLJ0540-110 6.3
6-J510	EJ-354269	PHONE J 3P HLJ0540-110 6.3
6-J511	EJ-354269	PHONE J 3P HLJ0540-110 6.3
6-J512	EJ-360771	DIN J TCS5037-01-241 13P

7. INPUT JACK P.C BOARD

Ref. No.	Part No.	Description
7-J514	EJ-354269	PHONE J 3P HLJ0540-110 6.3
7-J515	EJ-354269	PHONE J 3P HLJ0540-110 6.3
7-J516	EJ-354269	PHONE J 3P HLJ0540-110 6.3

8. MIDI JACK P.C BOARD

Ref. No.	Part No.	Description
8-D1	ED-301911	D SILICON H DS448
8-IC1	EI-310044	IC SN74LS05N
8-J513	EJ-364256	DIN J M1704 3P
8-PH1	ET-354167	DETECTOR PC900

9. INVERTER P.C BOARD

Ref. No.	Part No.	Description
9-R1	ER-333372	R CB H S10 FS RDS 1/4W 150J
9-1	VT-365945	MULTI BLK INVERTER NEL-D32-43

10. VOLUME P.C BOARD

Ref. No.	Part No.	Description
10-VR1	EV-366285	VR ROTARY 16P10X2I A103
10-VR2	EV-365952	VR ROTARY 16P10X2H B103
10-VR3	EV-365953	VR ROTARY 16P22X0Z B103 B103

11. CONTRAST P.C BOARD

Ref. No.	Part No.	Description
11-VR1	EV-365817	VR ROTARY 16P10X2G B102

12. LED P.C BOARD

Ref. No.	Part No.	Description
12-D1	ED-364261	D LED SLP-981C-50

Downloaded from www.Manualslib.com manuals search engine

13. POWER SUPPLY P.C BOARD

Ref. No.	Part No.	Description
13-C1	EC-201650	C EC V CUT AS1 472M 10DC
13-C5	EC-316188	C EC V CUT SM 102M 25DC
13-C6	EC-316188	C EC V CUT SM 102M 25DC
13-TR1	ET-360067	TR 2SC3330 T,U F05
13-D1	*ED-357038	D SILICON DBB10B 100/1.0A
13-D2	*ED-330319	D SILICON DBA10B 100/1.0A
13-D3	*ER-337754	R OMF H S15 FS 1W 100J
13-D4	*ER-337754	R OMF H S15 FS 1W 100J
13-D5	*ER-337754	R OMF H S15 FS 1W 100J
13-D6	*ER-337754	R OMF H S15 FS 1W 100J
13-D7	*ER-337754	R OMF H S15 FS 1W 100J
13-D8	ED-301911	D SILICON H DS448
13-D9	ED-346617	D ZENER H HZ12 C2
13-IC1	*EI-348123	IC M5230L
13-R1	ER-324185	R CB H S10 FS RDS 1/4W 221J
13-R2	ER-324185	R CB H S10 FS RDS 1/4W 221J
13-TR1	ET-360067	TR 2SC3330 T,U F05
13-F2	*EF-306952	FUSE TSC A 250V 4.00A [J]
13-F2A	*EF-306957	FUSE TSC 125V 4.00A [C,A]
13-F2B	*EF-691007	FUSE SEMKO T 3.15A 250V [E,V,S]
13-F2C	*EF-359225	FUSE BET T 3.15A 250V [B]
13-F3	*EF-306124	FUSE TSC A 250V 630MA [J]
13-F3A	*EF-305703	FUSE TSC 125V 630MA [C,A]
13-F3B	*EF-601942	FUSE SEMKO T 630MA 250V [E,V,S]
13-F3C	*EF-358974	FUSE BET T 630MA 250V [B]
13-F4	*EF-309387	FUSE TSC A 250V 1.00A [J]
13-F4A	*EF-310229	FUSE TSC 125V 1.00A [C,A]
13-F4B	*EF-258344	FUSE SEMKO T 800MA 250V [E,V,S]
13-F4C	*EF-358641	FUSE BET T 800MA 250V [B]
13-F5	*EF-309387	FUSE TSC A 250V 1.00A [J]
13-F5A	*EF-310229	FUSE TSC 125V 1.00A [C,A]
13-F5B	*EF-258344	FUSE SEMKO T 800MA 250V [E,V,S]
13-F5C	*EF-358641	FUSE BET T 800MA 250V [B]
13-D901	*ED-365818	D SILICON CTU-12S
13-D902	*ED-365819	D SILICON CTU-12R
13-IC901	*EI-365820	IC STR9005
13-IC902	*EI-347758	IC TA78012AP
13-IC903	*EI-365822	IC NJM78M06A
13-IC904	*EI-365823	IC NJM79M06A
13-TR901	*ET-356817	TR 2SB891 Q,R
13-TR902	*ET-354083	TR 2SD1189 Q,R
13-1	ZW-632226	WASHER INSULATOR (BUSH M)

14. FILTER P.C BOARD

Ref. No.	Part No.	Description
14-C2	*EC-358450	C CE V DNS102MBE B 102M 400AC [A,V]
14-C3	*EC-358450	C CE V DNS102MBE B 102M 400AC [A,V]
14-C4	*EC-369670	C MY V XE 683M 250V [A,V]
14-FL1	EO-360068	COIL LF LF-2 B
14-F1	*EF-306951	FUSE TSC A 250V 2.50A [J]
14-F1A	*EF-306954	FUSE TSC 125V 2.00A [C,A]
14-F1B	*EF-623103	FUSE SEMKO T 1.00A 250V [E,V,S]
14-F1C	*EF-355226	FUSE BET T 1.00A 250V [B]

15. LCD P.C BOARD

Ref. No.	Part No.	Description
15-1	EM-365844	IND LCD DMC40218UE [INC. PCB]

16. CONNECTOR P.C BOARD

Ref. No.	Part No.	Description
16-J522	EJ-365932	CONNECTOR HDB0001-01-2131 25P

17. FDD

Ref. No.	Part No.	Description
17-IC1	EI-718239	IC M51017P
17-IC2	EI-718240	IC HA13421
17-IC3	EI-718241	IC 74LS93
17-RSW1	ES-718243	SW REED
17-SP2	EJ-718245	PLUG SHORT
17-VR2	EV-718242	R S-FIX VRP0016-204BIM

Downloaded from www.Manualslib.com manuals search engine

ASSEMBLY BLOCK

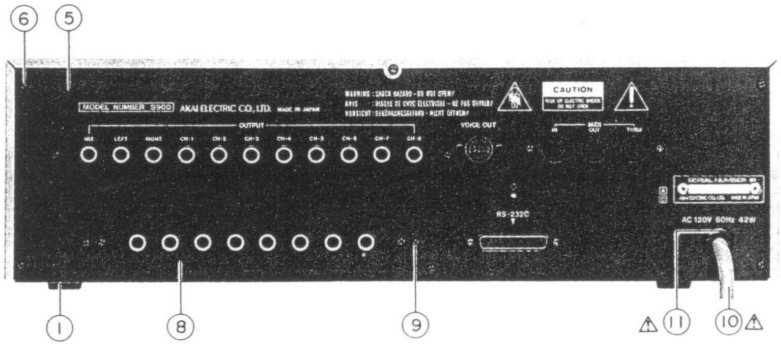

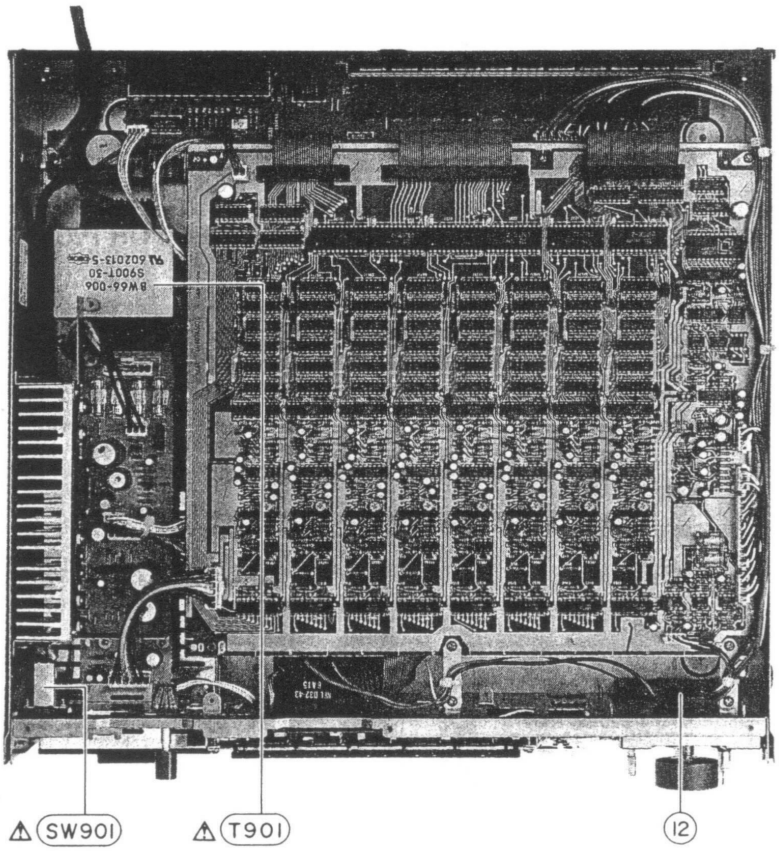

18. ASSEMBLY BLOCK

Ref. No.	Part No.	Description
18-1	SA-349332	FOOT
18-2X	ZS-360715	ST PAN30X08STL CMT C080 [FOOT FIX]
18-3X	ZS-314702	ST BID40X10STL CMT [TRANS POWER FIX]
18-4X	ZW-273892	TW40 [TRANS POWER FIX]
18-5	SP-362368A	PANEL REAR (J)
18-5A	SP-362368B	PANEL REAR (C,A)
18-5B	SP-362368C	PANEL REAR (E,V,B,S)
18-6	ZS-366240	T2BR30X06STL BNI PROJECTION [PANEL REAR FIX]
18-7X	ZW-698308	RV NYL30X055 BL
18-8	SC-362359A	COVER REAR (A)
18-9	ZS-366240	T2BR30X06STL BNI PROJECTION [COVER REAR FIX]
18-10	∗EW-365947	AC CORD 250 SKP210KS17B A J [J]
18-10A	∗EW-366055	AC CORD 250 KP11WSJT18 UC [C,A]
18-10B	∗EW-359641	AC CORD 2 CORES KP-419C/KS-17 EV [E,V]
18-10C	∗EW-358631	AC CORD 2 CORES KS-17 LTBS2F BS [B]
18-10D	∗EW-358630	AC CORD 2 CORES KP560 LTSA2F KS17 S [S]
18-11	∗EZ-302906	STRAIN RELIEF SR-6N-4 [C,A]
18-12	ES-365943	SW EWT-XDFK2550B
18-C901	∗EC-361942	C CE V DNS103ZV V 103Z 400AC
18-J901	∗EJ-358633	SOCKET INLET SOT017 2P [J,E,V,B,S]
18-SW901	∗ES-337902	SW PUSH SDLD1P 01-1
18-VS901	∗ES-306430	SW SLIDE J-S4013#01 01-2 [E,V,B,S]
18-T901	∗BT-365907	TRANS POWER S900T-10(J)
18-T901A	∗BT-365908	TRANS POWER S900T-30(A,C)
18-T901B	∗BT-365909	TRANS POWER S900T-50(E,V,B,S)

Downloaded from www.Manualslib.com manuals search engine

FINAL ASSEMBLY BLOCK

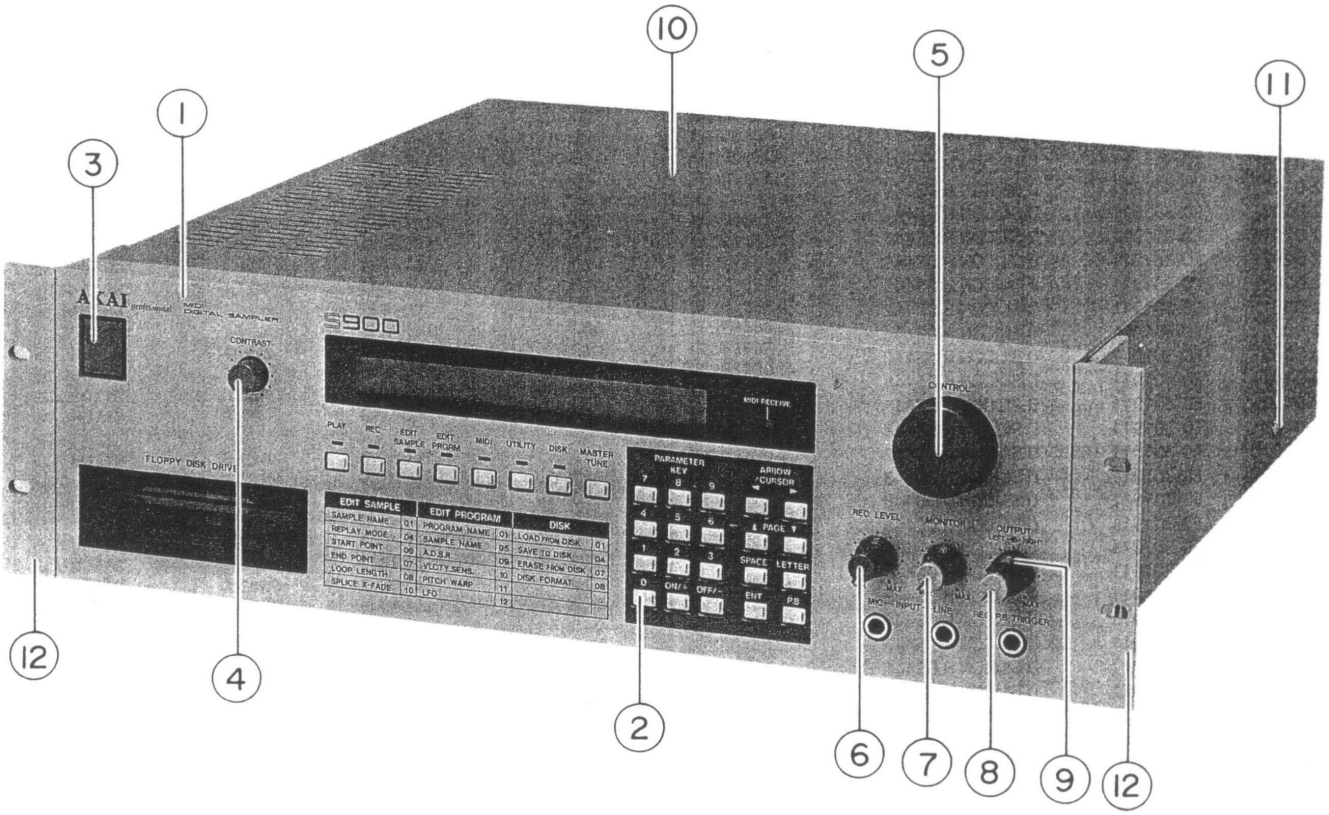

19. FINAL ASSEMBLY BLOCK

Ref. No.	Part No.	Description
19-1	BD-B362369	PANEL FRONT PART
19-2	SK-362347A-A	KNOB PUSH (1)
19-3	SK-343017J	KNOB POWER (C)
19-4	SK-331108E	KNOB (A-5)
19-5	SK-362353	KNOB ROTARY (A)
19-6	SK-B364611	KNOB MONITOR RED (2) PART
19-7	SK-B364614	KNOB MONITOR WHITE (2) PART
19-8	SK-B364607	KNOB UPPER WHITE (3) PART
19-9	SK-352755C	KNOB LOWER (3)
19-10	SP-362371-A	COVER UPPER
19-11	ZS-341959	ST BID40X06STL NI3 [COVER UPPER FIX]
19-12	SH-362361	HANDLE RACK
19-13X	ZS-321783	ST BID40X10STL NI3 [HANDLE RACK FIX]

Downloaded from www.Manualslib.com manuals search engine

ASK90

1. P.C BOARD BLOCK

Ref. No.	Part No.	Description
1-1	BA-L5012A020A	PC DRUM BLK ASK90

2. DRUM P.C BOARD

Ref. No.	Part No.	Description
2-D101	ED-301911	D SILICON H DS448
2-D102	ED-301911	D SILICON H DS448
2-D103	ED-301911	D SILICON H DS448
2-D201	ED-301911	D SILICON H DS448
2-D202	ED-301911	D SILICON H DS448
2-D203	ED-301911	D SILICON H DS448
2-D301	ED-301911	D SILICON H DS448
2-D302	ED-301911	D SILICON H DS448
2-D303	ED-301911	D SILICON H DS448
2-D401	ED-301911	D SILICON H DS448
2-D402	ED-301911	D SILICON H DS448
2-D403	ED-301911	D SILICON H DS448
2-D501	ED-301911	D SILICON H DS448
2-D502	ED-301911	D SILICON H DS448
2-D503	ED-301911	D SILICON H DS448
2-D601	ED-301911	D SILICON H DS448
2-D602	ED-301911	D SILICON H DS448
2-D603	ED-301911	D SILICON H DS448
2-D701	ED-301911	D SILICON H DS448
2-D702	ED-301911	D SILICON H DS448
2-D703	ED-301911	D SILICON H DS448
2-D801	ED-301911	D SILICON H DS448
2-D802	ED-301911	D SILICON H DS448
2-D803	ED-301911	D SILICON H DS448
2-IC1	EI-360051	IC ADC0809CCN
2-IC2	EI-360026	IC TC74HC04P
2-IC3	EI-365839	IC HD74LS92P
2-IC4	EI-365840	IC TC74HC155P
2-IC5	EI-365801	IC TC74HC257P
2-IC6	EI-360053	IC TC74HC175P
2-IC7	EI-360042	IC TC74HC259P
2-IC8	EI-336995	IC NJM78L05A
2-IC101	EI-367225	IC M5238P-13
2-IC102	EI-367225	IC M5238P-13
2-IC201	EI-367225	IC M5238P-13
2-IC202	EI-367225	IC M5238P-13
2-IC301	EI-367225	IC M5238P-13
2-IC302	EI-367225	IC M5238P-13
2-IC401	EI-367225	IC M5238P-13
2-IC402	EI-367225	IC M5238P-13
2-IC501	EI-367225	IC M5238P-13
2-IC502	EI-367225	IC M5238P-13
2-IC601	EI-367225	IC M5238P-13
2-IC602	EI-367225	IC M5238P-13
2-IC701	EI-367225	IC M5238P-13
2-IC702	EI-367225	IC M5238P-13
2-IC801	EI-367225	IC M5238P-13
2-IC802	EI-362588	IC M5238P
2-J601	EJ-354269	PHONE J 3P HLJ0540-110 6.3
2-J602	EJ-354269	PHONE J 3P HLJ0540-110 6.3
2-J603	EJ-354269	PHONE J 3P HLJ0540-110 6.3
2-J604	EJ-354269	PHONE J 3P HLJ0540-110 6.3
2-J605	EJ-354269	PHONE J 3P HLJ0540-110 6.3
2-J606	EJ-354269	PHONE J 3P HLJ0540-110 6.3
2-J607	EJ-354269	PHONE J 3P HLJ0540-110 6.3
2-J608	EJ-354269	PHONE J 3P HLJ0540-110 6.3
2-TR101	ET-360067	TR 2SC3330 T,U F05
2-TR102	ET-360067	TR 2SC3330 T,U F05
2-TR201	ET-360067	TR 2SC3330 T,U F05
2-TR202	ET-360067	TR 2SC3330 T,U F05
2-TR301	ET-360067	TR 2SC3330 T,U F05
2-TR302	ET-360067	TR 2SC3330 T,U F05
2-TR401	ET-360067	TR 2SC3330 T,U F05
2-TR402	ET-360067	TR 2SC3330 T,U F05
2-TR501	ET-360067	TR 2SC3330 T,U F05
2-TR502	ET-360067	TR 2SC3330 T,U F05
2-TR601	ET-360067	TR 2SC3330 T,U F05
2-TR602	ET-360067	TR 2SC3330 T,U F05
2-TR701	ET-360067	TR 2SC3330 T,U F05
2-TR702	ET-360067	TR 2SC3330 T,U F05
2-TR801	ET-360067	TR 2SC3330 T,U F05
2-TR802	ET-360067	TR 2SC3330 T,U F05
2-1	SC-362359B	COVER REAR (B)
2-2	ZS-447761	T2BR30X06STL BNI

Downloaded from www.Manualslib.com manuals search engine

S900

Part No.	Ref. No.	Part No.	Ref. No.	Part No.	Ref. No.	Part No.	Ref. No.
BA-L6002A020A	2-3	EI-354283	3-IC510	EI-360565	3-IC111	EI-365830	3-IC203
BA-L6002A040A	2-2	EI-354283	3-IC610	EI-360565	3-IC211	EI-365830	3-IC301
BA-L6002A050A	2-1	EI-354283	3-IC710	EI-360565	3-IC311	EI-365830	3-IC302
BA-L6002A060A	2-5	EI-354283	3-IC810	EI-360565	3-IC411	EI-365830	3-IC303
BA-L6002A080A	2-4	EI-355887	4-IC42	EI-360565	3-IC511	EI-365830	3-IC401
BA-718228	1-6	EI-355888	4-IC41	EI-360565	3-IC611	EI-365830	3-IC402
BB-365944-A	1-1	EI-355889	4-IC39	EI-360565	3-IC711	EI-365830	3-IC403
BD-B362369	19-1	EI-355892	4-IC40	EI-360565	3-IC811	EI-365830	3-IC501
BM-718237	1-34	EI-356049	4-IC29	EI-360954	3-IC6	EI-365830	3-IC502
BT-365907	18-T901	EI-360021	4-IC8	EI-361275	3-IC19	EI-365830	3-IC503
BT-365908	18-T901A	EI-360025	4-IC22	EI-361275	3-IC20	EI-365830	3-IC601
BT-365909	18-T901B	EI-360025	4-IC23	EI-361275	3-IC21	EI-365830	3-IC602
EC-201650	13-C1	EI-360025	4-IC24	EI-362588	3-IC2	EI-365830	3-IC603
EC-316188	13-C5	EI-360026	3-IC18	EI-362588	3-IC3	EI-365830	3-IC701
EC-316188	13-C6	EI-360026	4-IC32	EI-362588	3-IC25	EI-365830	3-IC702
EC-358450	14-C2	EI-360026	4-IC86	EI-362588	3-IC26	EI-365830	3-IC703
EC-358450	14-C3	EI-360027	3-IC106	EI-362588	3-IC27	EI-365830	3-IC801
EC-360716	3-C21	EI-360027	3-IC206	EI-365239	4-IC45	EI-365830	3-IC802
EC-360719	3-C5	EI-360027	3-IC306	EI-365239	4-IC46	EI-365830	3-IC803
EC-360719	3-C6	EI-360027	3-IC406	EI-365239	4-IC47	EI-365831	3-IC104
EC-360719	3-C10	EI-360027	3-IC506	EI-365239	4-IC48	EI-365831	3-IC204
EC-360719	3-C109	EI-360027	3-IC606	EI-365239	4-IC49	EI-365831	3-IC304
EC-360719	3-C209	EI-360027	3-IC706	EI-365239	4-IC50	EI-365831	3-IC404
EC-360719	3-C309	EI-360027	3-IC806	EI-365239	4-IC51	EI-365831	3-IC504
EC-360719	3-C409	EI-360029	3-IC17	EI-365239	4-IC52	EI-365831	3-IC604
EC-360719	3-C509	EI-360029	4-IC26	EI-365239	4-IC53	EI-365831	3-IC704
EC-360719	3-C609	EI-360030	4-IC13	EI-365239	4-IC54	EI-365831	3-IC804
EC-360719	3-C709	EI-360030	4-IC14	EI-365239	4-IC55	EI-365831	4-IC19
EC-360719	3-C809	EI-360030	4-IC15	EI-365239	4-IC56	EI-365846	3-IC13
EC-361942	18-C901	EI-360030	4-IC16	EI-365239	4-IC57	EI-367194	4-IC73
EC-369670	14-C4	EI-360030	4-IC17	EI-365239	4-IC58	EI-367194	4-IC74
ED-301911	3-D1	EI-360032	4-IC18	EI-365239	4-IC59	EI-367194	4-IC75
ED-301911	4-D1	EI-360035	4-IC82	EI-365239	4-IC60	EI-367330-C	4-IC11
ED-301911	8-D1	EI-360036	4-IC33	EI-365239	4-IC61	EI-367331-C	4-IC12
ED-301911	13-D8	EI-360036	4-IC34	EI-365239	4-IC62	EI-390060	3-IC108
ED-330319	13-D2	EI-360036	4-IC88	EI-365239	4-IC63	EI-390060	3-IC208
ED-346617	13-D9	EI-360037	4-IC35	EI-365239	4-IC64	EI-390060	3-IC308
ED-357038	13-D1	EI-360037	4-IC36	EI-365239	4-IC65	EI-390060	3-IC408
ED-364261	5-D1	EI-360038	3-IC14	EI-365239	4-IC66	EI-390060	3-IC508
ED-364261	5-D2	EI-360038	3-IC105	EI-365239	4-IC67	EI-390060	3-IC608
ED-364261	5-D3	EI-360038	3-IC205	EI-365239	4-IC68	EI-390060	3-IC708
ED-364261	5-D4	EI-360038	3-IC305	EI-365239	4-IC69	EI-390060	3-IC808
ED-364261	5-D5	EI-360038	3-IC405	EI-365239	4-IC70	EI-718239	17-IC1
ED-364261	5-D6	EI-360038	3-IC505	EI-365239	4-IC71	EI-718240	17-IC2
ED-364261	5-D7	EI-360038	3-IC605	EI-365239	4-IC72	EI-718241	17-IC3
ED-364261	12-D1	EI-360038	3-IC705	EI-365792	4-IC1	EJ-354269	6-J501
ED-365818	13-D901	EI-360038	3-IC805	EI-365793	4-IC2	EJ-354269	6-J502
ED-365819	13-D902	EI-360038	4-IC87	EI-365794	4-IC3	EJ-354269	6-J503
EF-258344	13-F4B	EI-360039	4-IC37	EI-365794	4-IC4	EJ-354269	6-J505
EF-258344	13-F5B	EI-360039	4-IC85	EI-365794	4-IC5	EJ-354269	6-J505
EF-305703	13-F3A	EI-360039	4-IC90	EI-365795	4-IC6	EJ-354269	6-J506
EF-306124	13-F3	EI-360042	4-IC25	EI-365796	4-IC7	EJ-354269	6-J507
EF-306951	14-F1	EI-360043	3-IC1	EI-365797	4-IC9	EJ-354269	6-J508
EF-306952	13-F2	EI-360045	3-IC8	EI-365798	4-IC10	EJ-354269	6-J509
EF-306954	14-F1A	EI-360047	3-IC12	EI-365801	4-IC20	EJ-354269	6-J510
EF-306957	13-F2A	EI-360047	3-IC15	EI-365801	4-IC27	EJ-354269	6-J511
EF-309387	13-F4	EI-360047	3-IC16	EI-365801	4-IC79	EJ-354269	7-J514
EF-309387	13-F5	EI-360048	3-IC11	EI-365801	4-IC80	EJ-354269	7-J515
EF-310229	13-F4A	EI-360049	3-IC10	EI-365801	4-IC81	EJ-354269	7-J516
EF-310229	13-F5A	EI-360050	3-IC9	EI-365802	4-IC28	EJ-358633	18-J901
EF-355226	14-F1C	EI-360050	3-IC107	EI-365803	4-IC31	EJ-358691	4-1
EF-358641	13-F4C	EI-360050	3-IC207	EI-365804	4-IC38	EJ-360771	6-J512
EF-358641	13-F5C	EI-360050	2-IC307	EI-365805	4-IC43	EJ-364256	8-J513
EF-358974	13-F3C	EI-360050	3-IC407	EI-365806	4-IC44	EJ-365932	16-J522
EF-359225	13-F2C	EI-360050	3-IC507	EI-365809	4-IC76	EJ-718245	17-SP2
EF-601942	13-F3B	EI-360050	3-IC607	EI-365809	4-IC77	EM-365844	15-1
EF-623103	14-F1B	EI-360050	3-IC707	EI-365809	4-IC78	EQ-360068	14-FL1
EF-691007	13-F2B	EI-360050	3-IC807	EI-365810	4-IC83	EQ-348929	3-RL1
EH-347688	5-CR1	EI-360053	4-IC21	EI-365810	4-IC84	EQ-348929	3-RL2
EH-347688	5-CR2	EI-360053	4-IC30	EI-365811	4-X1	ER-200939	4-R30
EI-310044	8-IC1	EI-360053	4-IC89	EI-365813	5-IC1	ER-200939	4-R31
EI-347758	13-IC902	EI-360058	3-IC7	EI-365820	13-IC901	ER-324185	3-R29
EI-348123	13-IC1	EI-360058	3-IC109	EI-365822	13-IC903	ER-324185	3-R121
EI-354146	3-IC22	EI-360058	3-IC209	EI-365823	13-IC904	ER-324185	3-R221
EI-354146	3-IC23	EI-360058	3-IC309	EI-365829	3-IC4	ER-324185	3-R321
EI-354146	3-IC24	EI-360058	3-IC409	EI-365830	3-IC101	ER-324185	3-R421
EI-354283	3-IC110	EI-360058	3-IC509	EI-365830	3-IC102	ER-324185	3-R521
EI-354283	3-IC210	EI-360058	3-IC609	EI-365830	3-IC103	ER-324185	3-R621
EI-354283	3-IC310	EI-360058	3-IC709	EI-365830	3-IC201	ER-324185	3-R721
EI-354283	3-IC410	EI-360058	3-IC809	EI-365830	3-IC202	ER-324185	3-R821

Downloaded from www.Manualslib.com manuals search engine

Part No.	Ref. No.	Part No.	Ref. No.	Part No.	Ref. No.	Part No.	Ref. No.
ER-324185	13-R1	EV-307695	3-VR801				
ER-324185	13-R2	EV-365817	11-VR1				
ER-326169	3-R30	EV-365952	10-VR2				
ER-333372	9-R1	EV-365953	10-VR3				
ER-337754	13-D3	EV-366285	10-VR1				
ER-337754	13-D4	EV-718242	17-VR2				
ER-337754	13-D5	EW-358630	18-10D				
ER-337754	13-D6	EW-358631	18-10C				
ER-337754	13-D7	EW-359641	18-10B				
ER-356747	3-R58	EW-365947	18-10				
ER-362495	3-R7	EW-366055	18-10A				
ER-362495	3-R8	EZ-302906	18-11				
ER-365788	3-R31	ML-718225	1-3				
ER-365788	3-R202	MR-718235	1-20				
ER-365788	3-R302	MZ-718224	1-2				
ER-365788	3-R402	MZ-718232	1-17				
ER-365788	3-R502	SA-349332	18-1				
ER-365788	3-R602	SC-362359A	18-8				
ER-365788	3-R702	SH-362361	19-12				
ER-365788	3-R802	SK-B364607	19-8				
ER-365789	3-R32	SK-B364611	19-6				
ER-365789	3-R203	SK-B364614	19-7				
ER-365789	3-R303	SK-331108E	19-4				
ER-365789	3-R403	SK-343017J	19-3				
ER-365789	3-R503	SK-352755C	19-9				
ER-365789	3-R603	SK-362347A-A	19-2				
ER-365789	3-R703	SK-362353	19-5				
ER-365789	3-R803	SK-718229	1-9				
ES-306430	18-VS901	SP-362368A	18-5				
ES-337902	18-SW901	SP-362368B	18-5A				
ES-365851	5-SW1	SP-362368C	18-5B				
ES-365851	5-SW2	SP-362371-A	19-10				
ES-365851	5-SW3	SP-718230	1-10				
ES-365851	5-SW4	SZ-718231	1-11				
ES-365851	5-SW6	VT-365945	9-1				
ES-365851	5-SW7	ZG-718226	1-4				
ES-365851	5-SW8	ZG-718227	1-5				
ES-365851	5-SW9	ZG-718234	1-18				
ES-365851	5-SW10	ZG-718236	1-21				
ES-365851	5-SW11	ZS-314702	18-3X				
ES-365851	5-SW12	ZS-321783	19-13X				
ES-365851	5-SW13	ZS-341959	19-11				
ES-365851	5-SW14	ZS-360715	18-2X				
ES-365851	5-SW16	ZS-366240	18-6				
ES-365851	5-SW17	ZS-366240	18-9				
ES-365851	5-SW18	ZS-718238	1-37				
ES-365851	5-SW19	ZW-273892	18-4X				
ES-365851	5-SW20	ZW-632226	13-1				
ES-365851	5-SW21	ZW-698308	18-7X				
ES-365851	5-SW22						
ES-365851	5-SW23						
ES-365851	5-SW24						
ES-365851	5-SW25						
ES-365851	5-SW26						
ES-365851	5-SW27						
ES-365851	5-SW28						
ES-365943	18-12						
ES-718243	17-RSW1						
ET-353899	3-TR101						
ET-353899	3-TR201						
ET-353899	3-TR301						
ET-353899	3-TR401						
ET-353899	3-TR501						
ET-353899	3-TR601						
ET-353899	3-TR701						
ET-353899	3-TR801						
ET-354083	13-TR902						
ET-354167	8-PH1						
ET-356817	13-TR901						
ET-360067	3-TR1						
ET-360067	13-TR1						
ET-360067	13-TR1						
EV-307695	3-VR1						
EV-307695	3-VR101						
EV-307695	3-VR201						
EV-307695	3-VR301						
EV-307695	3-VR401						
EV-307695	3-VR501						
EV-307695	3-VF601						
EV-307695	3-VR701						

Downloaded from www.Manualslib.com manuals search engine

ASK90

Part No.	Ref. No.	Part No.	Ref. No.	Part No.	Ref. No.	Part No.	Ref. No.
BA-L5012A020A	1-1						
ED-301911	2-D101						
ED-301911	2-D102						
ED-301911	2-D103						
ED-301911	2-D201						
ED-301911	2-D202						
ED-301911	2-D203						
ED-301911	2-D301						
ED-301911	2-D302						
ED-301911	2-D303						
ED-301911	2-D401						
ED-301911	2-D402						
ED-301911	2-D403						
ED-301911	2-D501						
ED-301911	2-D502						
ED-301911	2-D503						
ED-301911	2-D601						
ED-301911	2-D602						
ED-301911	2-D603						
ED-301911	2-D701						
ED-301911	2-D702						
ED-301911	2-D703						
ED-301911	2-D801						
ED-301911	2-D802						
ED-301911	2-D803						
EI-336995	2-IC8						
EI-360026	2-IC2						
EI-360042	2-IC7						
EI-360051	2-IC1						
EI-360053	2-IC6						
EI-362588	2-IC802						
EI-365801	2-IC5						
EI-365839	2-IC3						
EI-365840	2-IC4						
EI-367225	2-IC101						
EI-367225	2-IC102						
EI-367225	2-IC201						
EI-367225	2-IC202						
EI-367225	2-IC301						
EI-367225	2-IC302						
EI-367225	2-IC401						
EI-367225	2-IC402						
EI-367225	2-IC501						
EI-367225	2-IC502						
EI-367225	2-IC601						
EI-367225	2-IC602						
EI-367225	2-IC701						
EI-367225	2-IC702						
EI-367225	2-IC801						
EJ-354269	2-J601						
EJ-354269	2-J602						
EJ-354269	2-J603						
EJ-354269	2-J604						
EJ-354269	2-J605						
EJ-354269	2-J606						
EJ-354269	2-J607						
EJ-354269	2-J608						
ET-360067	2-TR101						
ET-360067	2-TR102						
ET-360067	2-TR201						
ET-360067	2-TR202						
ET-360067	2-TR301						
ET-360067	2-TR302						
ET-360067	2-TR401						
ET-360067	2-TR402						
ET-360067	2-TR501						
ET-360067	2-TR502						
ET-360067	2-TR601						
ET-360067	2-TR602						
ET-360067	2-TR701						
ET-360067	2-TR702						
ET-360067	2-TR801						
ET-360067	2-TR802						
SC-362359B	2-1						
ZS-447761	2-2						

Downloaded from www.Manualslib.com manuals search engine

AKAI

MODEL S900

SCHEMATIC DIAGRAM AND PC BOARDS

TABLE OF CONTENTS

1. SCHEMATIC DIAGRAM OF ICs 2
2. VOICE BLOCK DIAGRAM 3
3. INPUT JACK, OUTPUT JACK, VR, CONNECTOR, INVERTOR, FILTER, CONTRAST, LED PCB 4
4. CONNECTION DIAGRAM 5
5. VOICE SCHEMATIC DIAGRAM 6
6. VOICE PCB 7
7. POWER SUPPLY, PANEL SCHEMATIC DIAGRAM AND POWER SUPPLY, PANEL, CONTRAST, LED PCB 8
8. FDD BLOCK DIAGRAM 9
9. DRUM INTERFACE SCHEMATIC DIAGRAM 10

Downloaded from www.Manualslib.com manuals search engine

INFORMATION OF ICs

NAME OF IC	FUNCTION
74HC02P	Quad 2 Input NOR
74HC04P	Hex Inverters
74LS05P	Hex OC Inverters
74HC86P	Quad 2 Input EX-OR
74HC109P	Dual J$\overline{K}$-FFs with Preset and Clear
74HC173P	4 Bit Register 3 state
74HC244	Octal 3 state Bus Buffers
74HC374P	Octal 3 state D-FFs
74HC670P	4-4 Register Files (3 states)
AM2504PC	8 Bit/12 Bit Successive Approximation Registers
BA6110	Voltage Controlled Low Noise OP-Amp
BA9201	8 Bit D/A Convertor with Latch
BA9221	12 Bit D/A Convertor
DG211CJ	Quad Analog Switch
IR9311	Conparator
M5220P	Dual Low Noise Voltage Amplifier
M5223P	Dual J-FET Input OP-Amp
M5230P	Regulator (Variable output, + – teacking type)
M5238P	Dual FET Input OP Amp
MF6CN-50	6th order switched capacitor Butter worth Low pass filter
SRT9005	Molded Series Regulator
TA78012P	+12V Regulator
TA78M06P	+6V Regulator
TA79M06P	–6V Regulator
μPC812C-AK	Dual Low drift J-FET Input OP-Amp
μPD71054C	Programmable timer counter
μPD71055C	Parallel Interface unit
μPD7265C	Programmable Floppy Disk Drive
μPD8253C	Programmable Interval timer

Downloaded from www.Manualslib.com manuals search engine

74HC173P

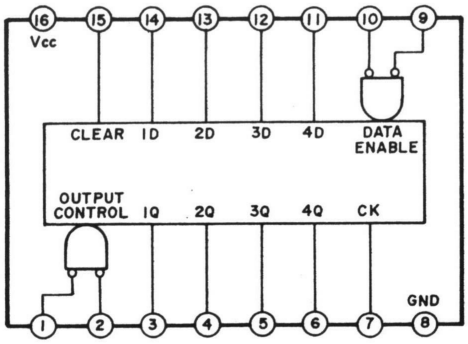

TRUTH TABLE

INPUT						OUTPUT $Q_A \sim Q_D$	OPERATION
CLEAR	CK	ENABLE		OUTPUT CONTROL			
		G1	G2	M	N		
L		L	L	—		1D ~ 4D	DATA SET
L	↑	H	X	—		—	HOLD
		X	H				
↑ H	X	X	X	—		LLLL	CLEAR
—				H	X	Z	—
				X	H		

74HC374P

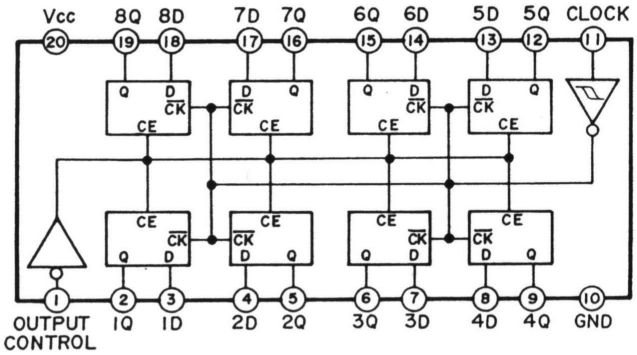

TRUTH TABLE

INPUT		OUTPUT
OUTPUT CONTROL	CK	
X	↑	DATA SET
H	X	OUTPUT HIGH IMPEDANCE

M5230L

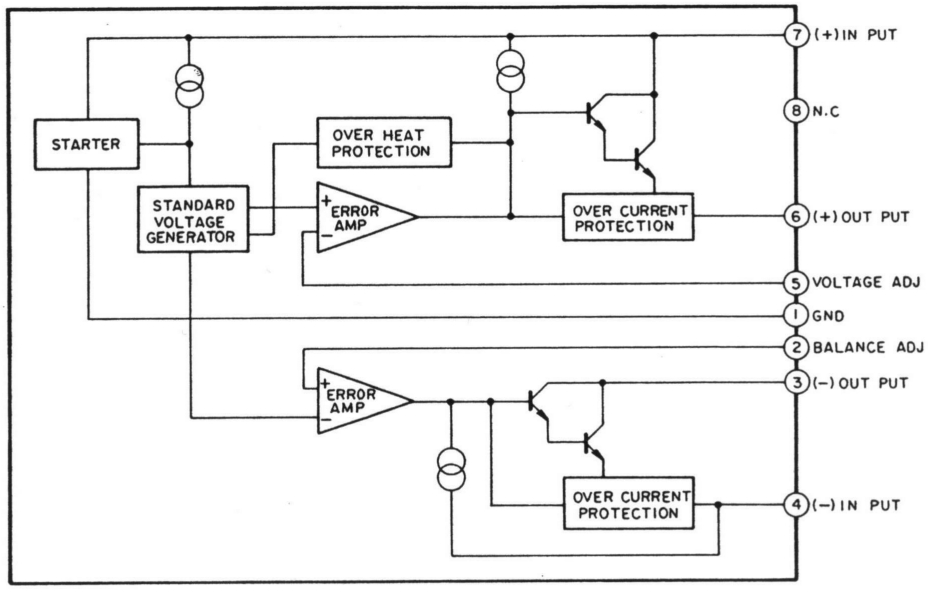

Downloaded from www.Manualslib.com manuals search engine

MF6CN-50

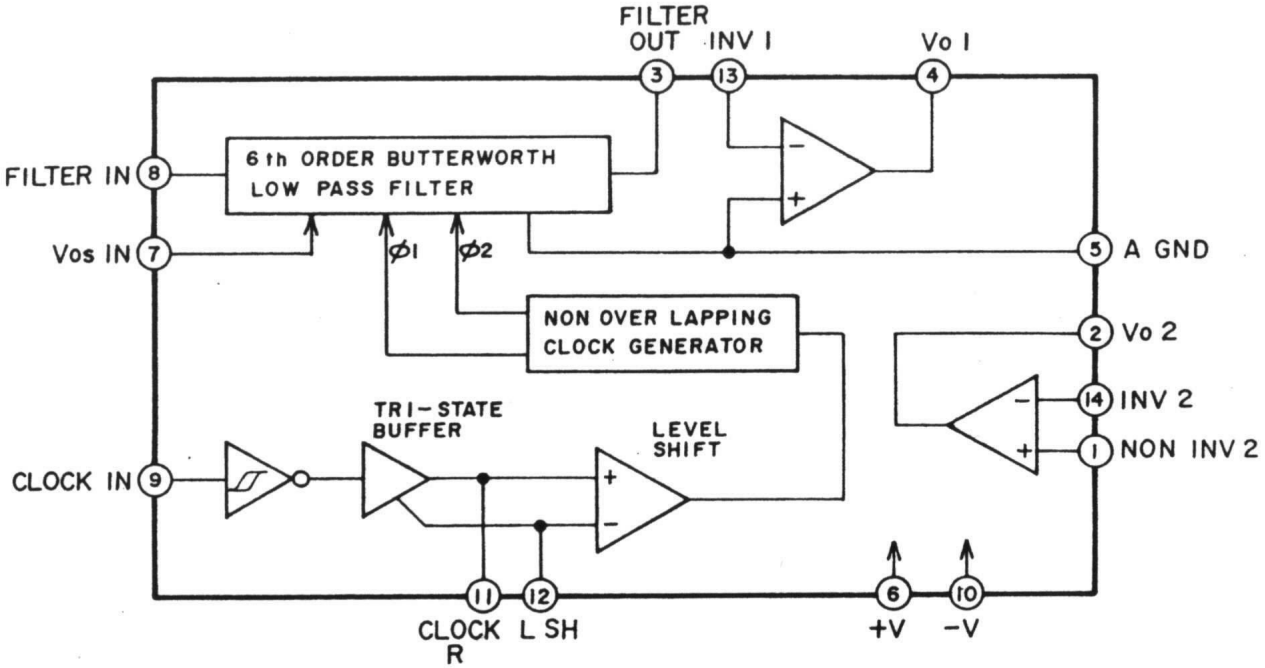

STR9005

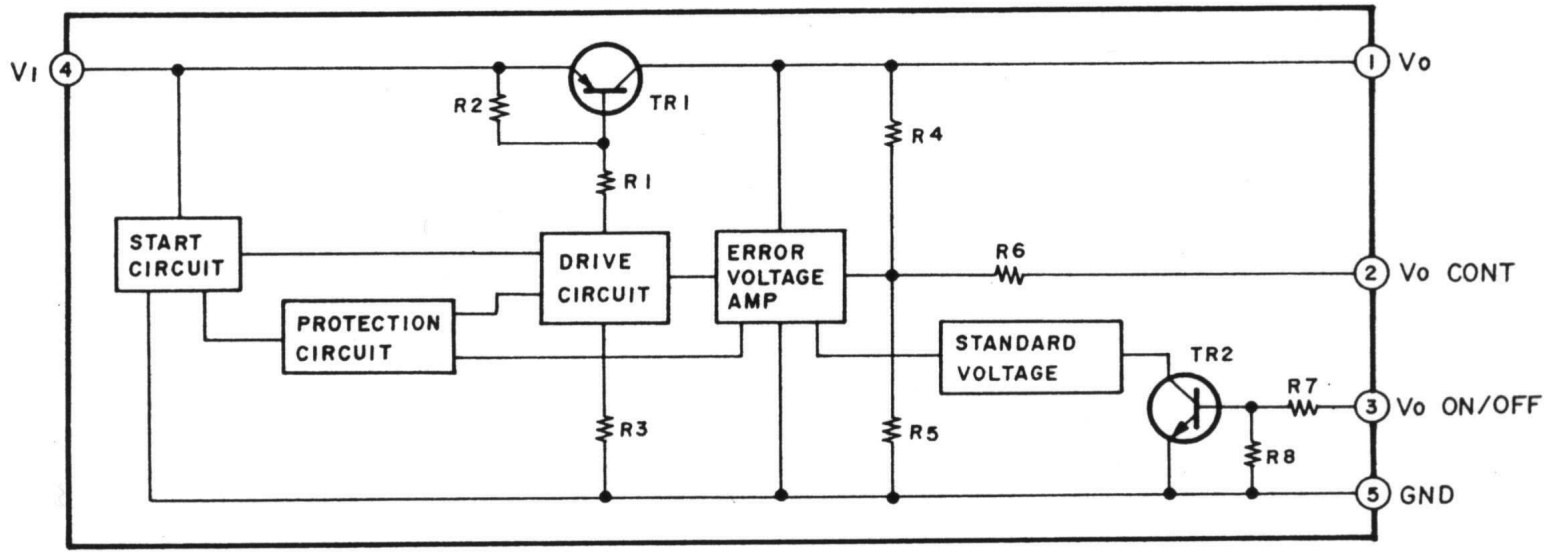

Downloaded from www.Manualslib.com manuals search engine

Downloaded from www.Manualslib.com manuals search engine

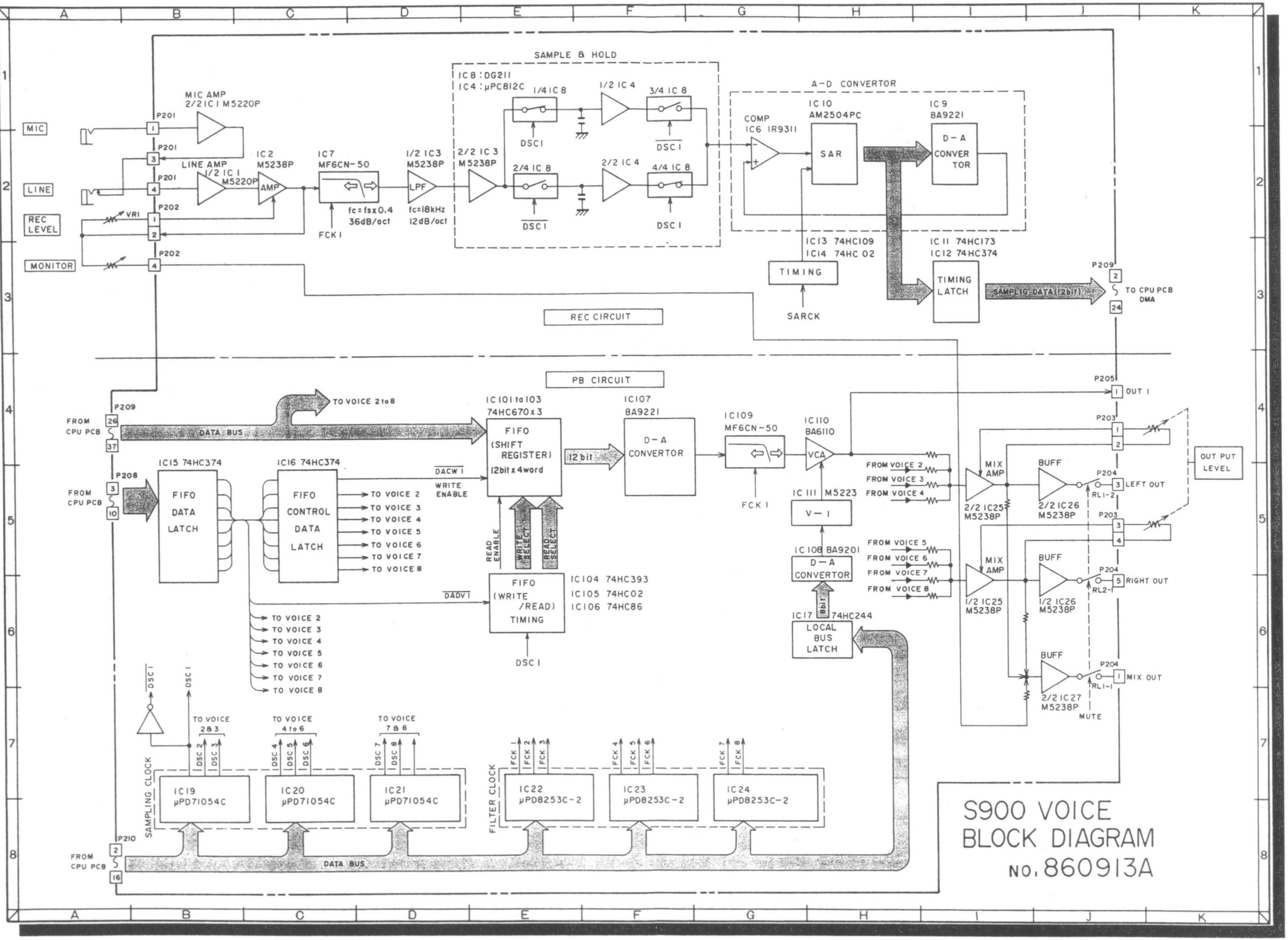

Downloaded from www.Manualslib.com manuals search engine

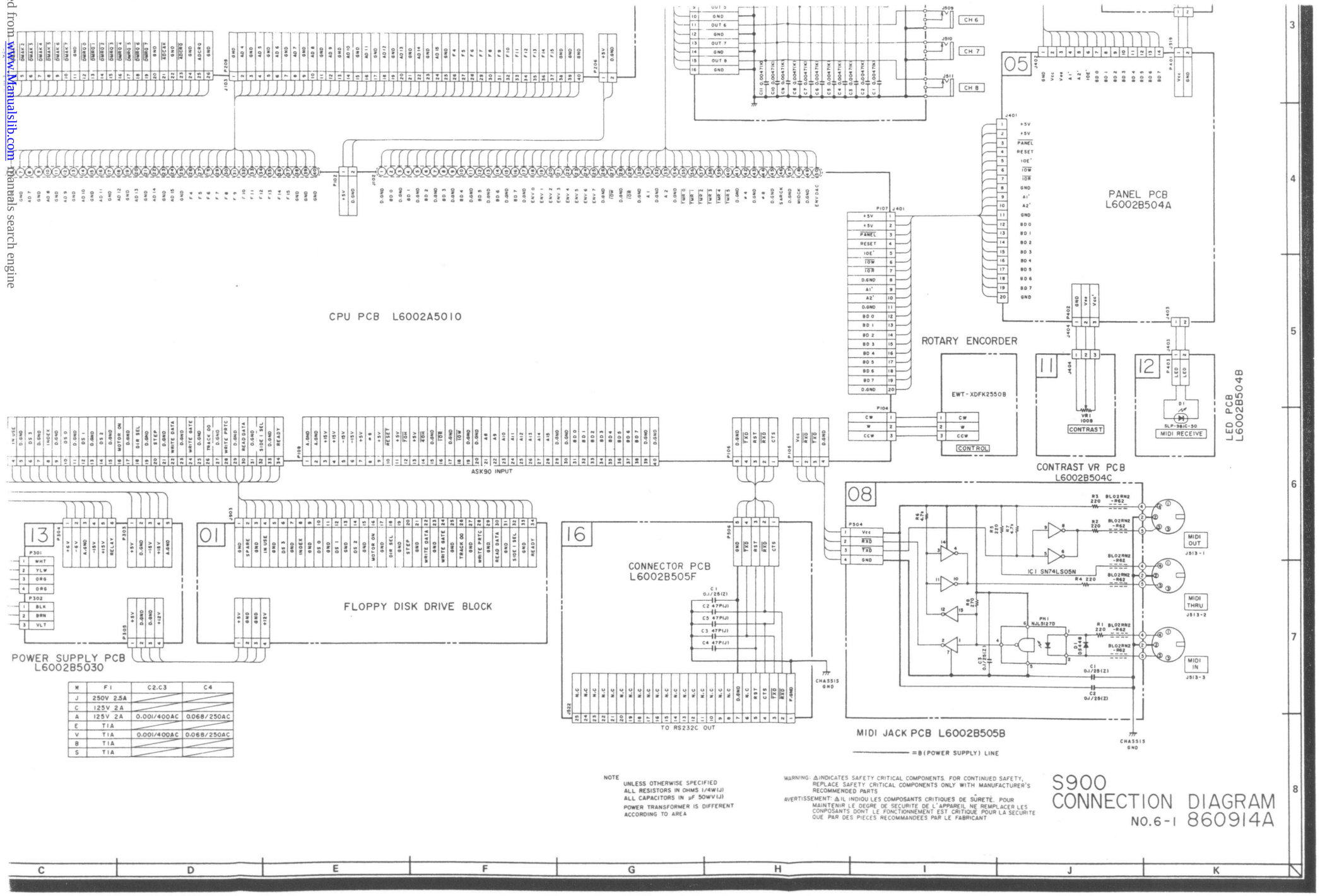

M	F1	C2.C3	C4
J	250V 2.5A		
C	125V 2A		
A	125V 2A	0.001/400AC	0.068/250AC
E	T1A		
V	T1A	0.001/400AC	0.068/250AC
B	T1A		
S	T1A		

NOTE
UNLESS OTHERWISE SPECIFIED
ALL RESISTORS IN OHMS 1/4W(J)
ALL CAPACITORS IN μF 50WV(J)
POWER TRANSFORMER IS DIFFERENT ACCORDING TO AREA

WARNING: ⚠INDICATES SAFETY CRITICAL COMPONENTS. FOR CONTINUED SAFETY, REPLACE SAFETY CRITICAL COMPONENTS ONLY WITH MANUFACTURER'S RECOMMENDED PARTS
AVERTISSEMENT: ⚠IL INDIQU LES COMPOSANTS CRITIQUES DE SÛRETÉ. POUR MAINTENIR LE DEGRE DE SECURITE DE L'APPAREIL NE REMPLACER LES CONPOSANTS DONT LE FONCTIONNEMENT EST CRITIQUE POUR LA SECURITE QUE PAR DES PIECES RECOMMANDEES PAR LE FABRICANT

S900 CONNECTION DIAGRAM
NO.6-1 860914A

Downloaded from www.Manualslib.com manuals search engine

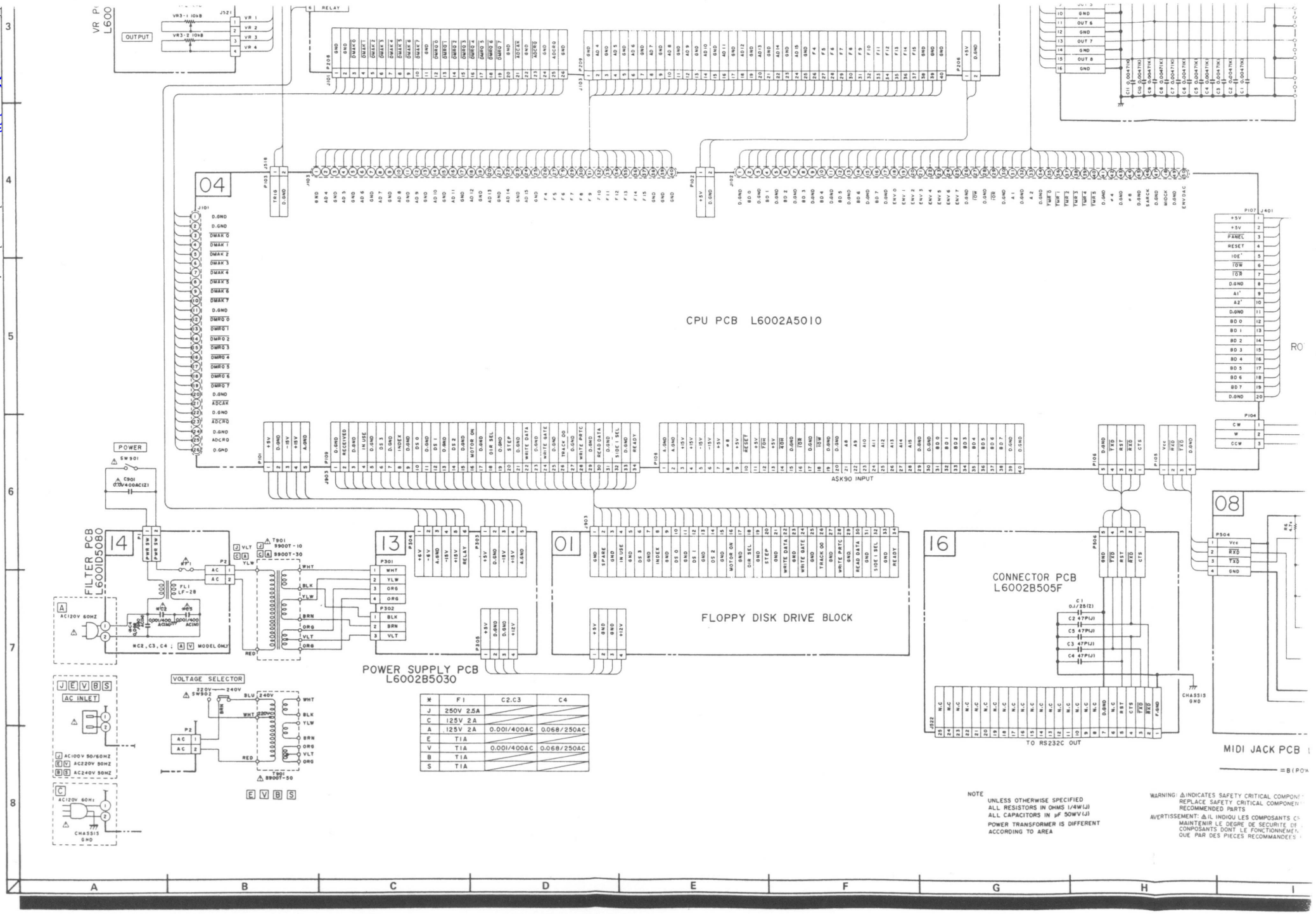

*	F1	C2,C3	C4
J	250V 2.5A		
C	125V 2A		
A	125V 2A	0.001/400AC	0.068/250AC
E	T1A		
V	T1A	0.001/400AC	0.068/250AC
B	T1A		
S	T1A		

NOTE
UNLESS OTHERWISE SPECIFIED
ALL RESISTORS IN OHMS 1/4W(J)
ALL CAPACITORS IN μF 50WV(J)
POWER TRANSFORMER IS DIFFERENT ACCORDING TO AREA

WARNING: ⚠INDICATES SAFETY CRITICAL COMPONENT
REPLACE SAFETY CRITICAL COMPONENT
RECOMMENDED PARTS
AVERTISSEMENT: ⚠IL INDIQU LES COMPOSANTS C
MAINTENIR LE DEGRE DE SECURITE D
COMPOSANTS DONT LE FONCTIONNEM
QUE PAR DES PIECES RECOMMANDEES

Downloaded from www.Manualslib.com manuals search engine

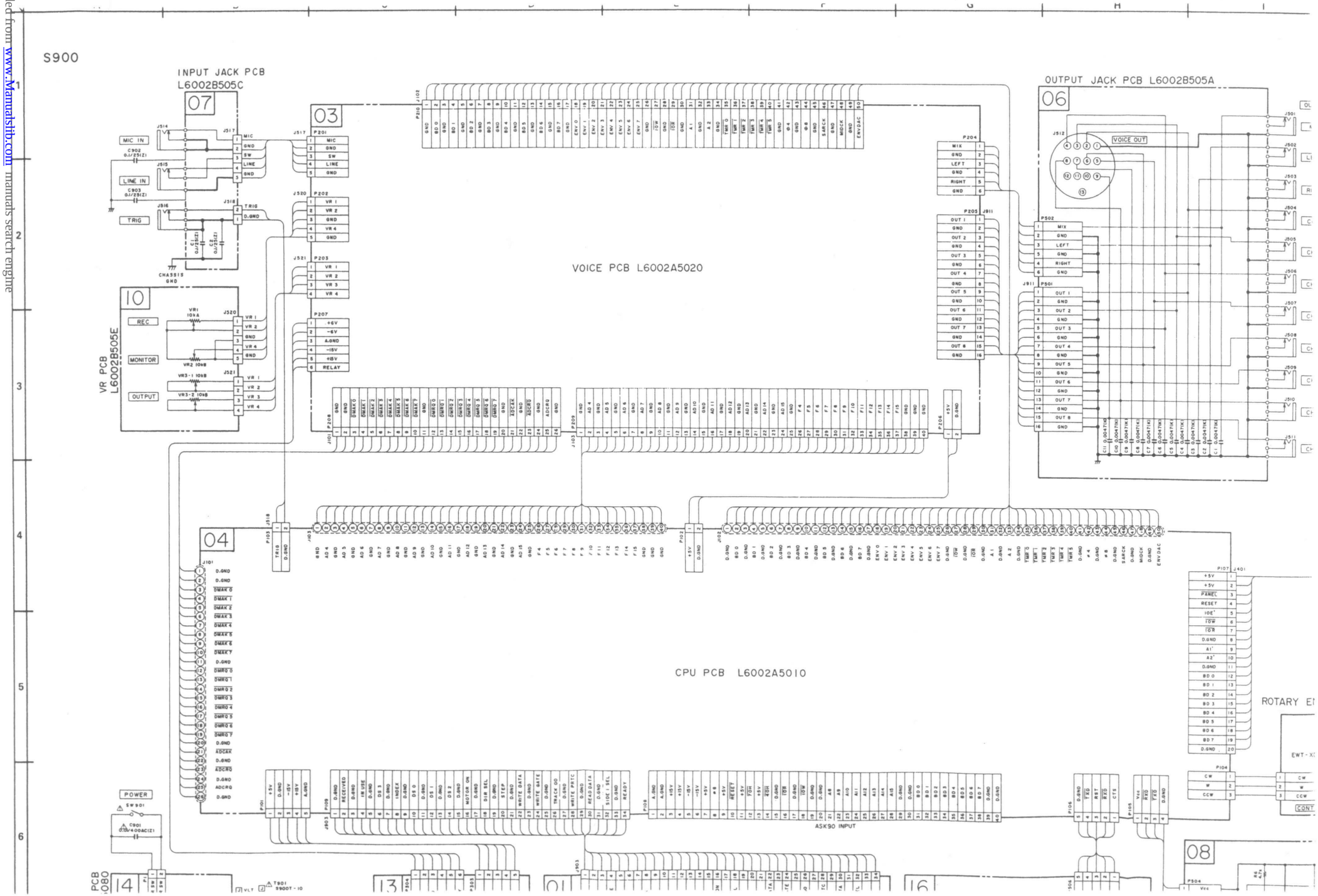

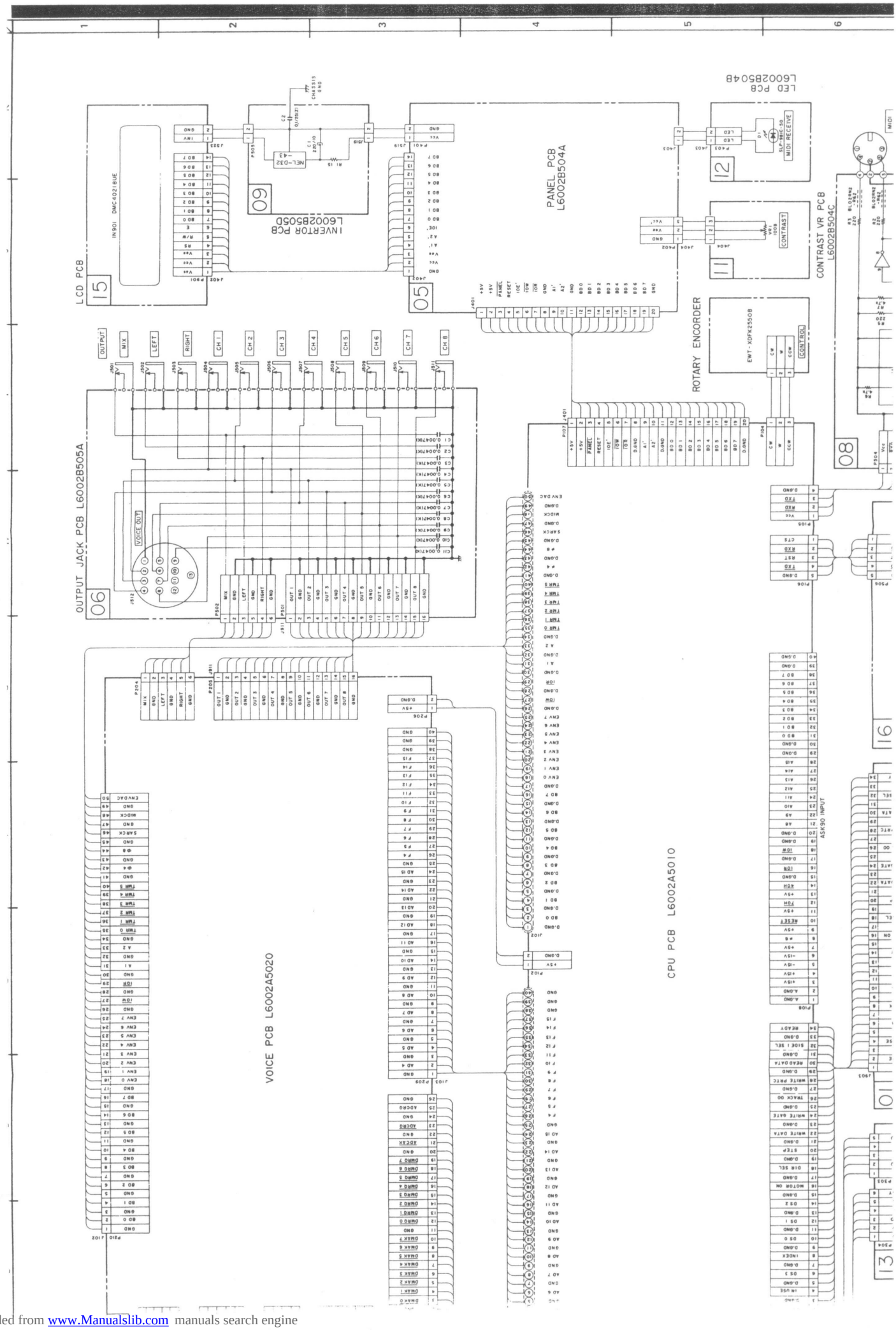

Downloaded from www.Manualslib.com manuals search engine

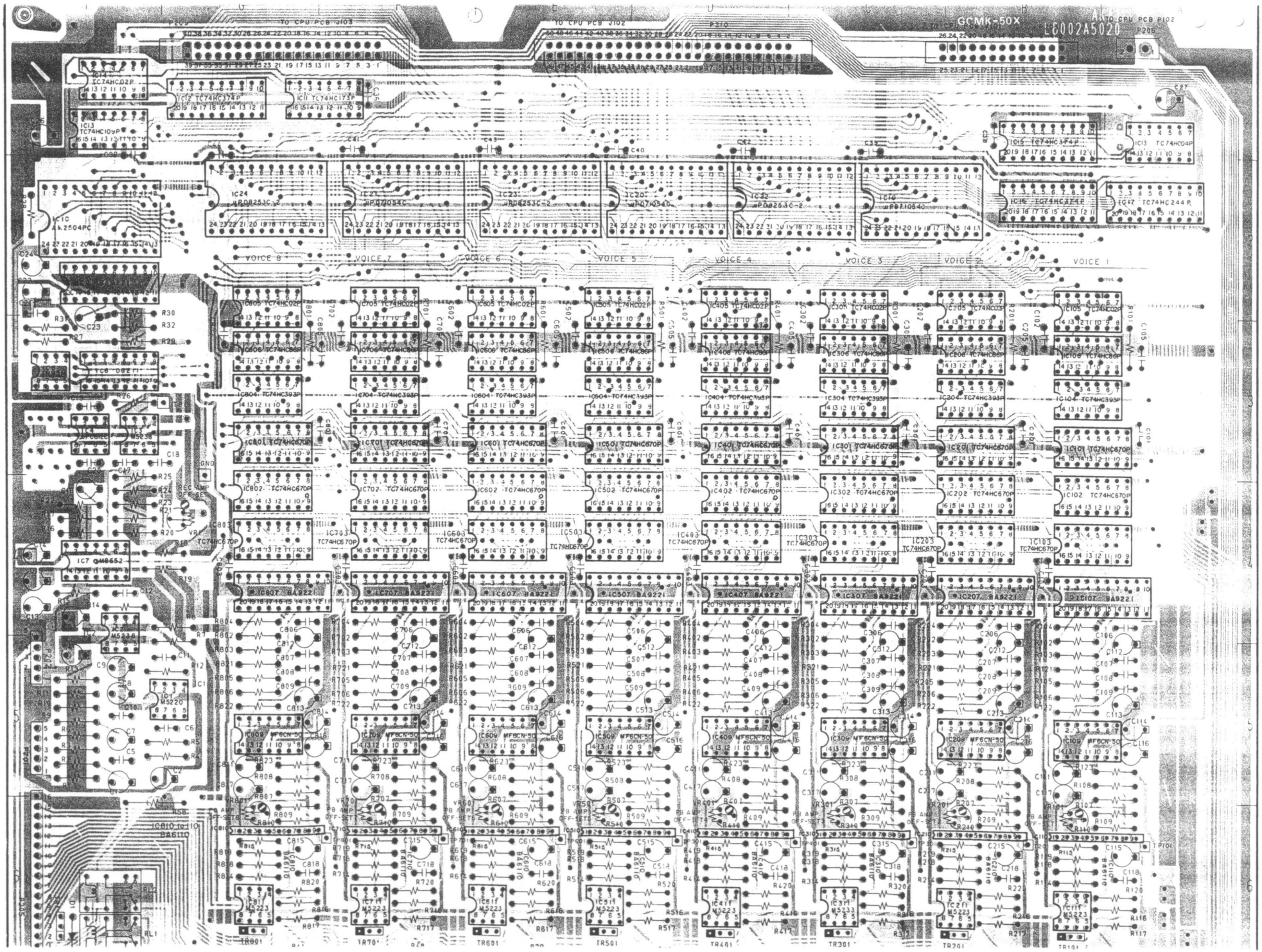

Downloaded from www.Manualslib.com manuals search engine

Downloaded from www.Manualslib.com manuals search engine

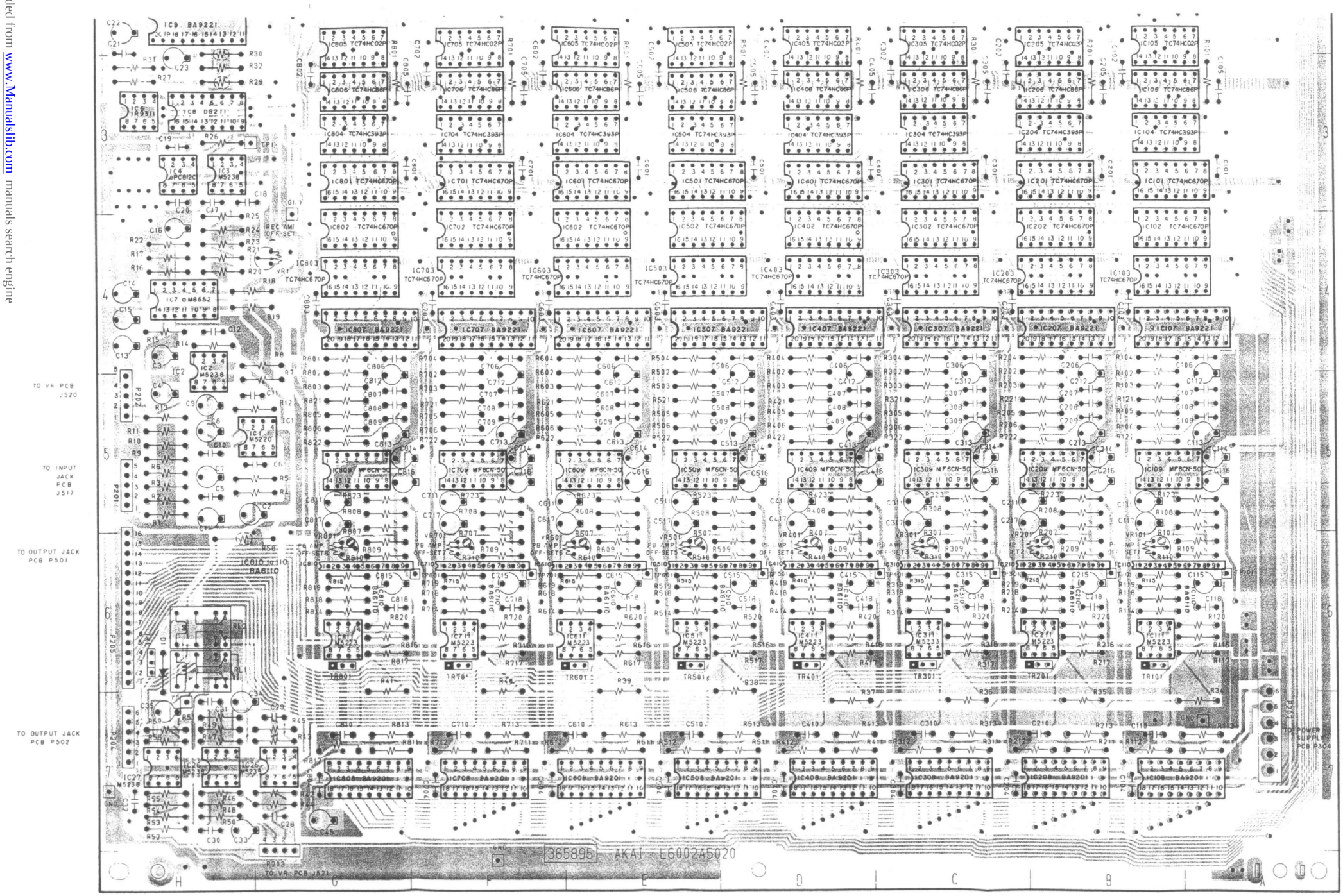

VOICE PCB L6002A5020

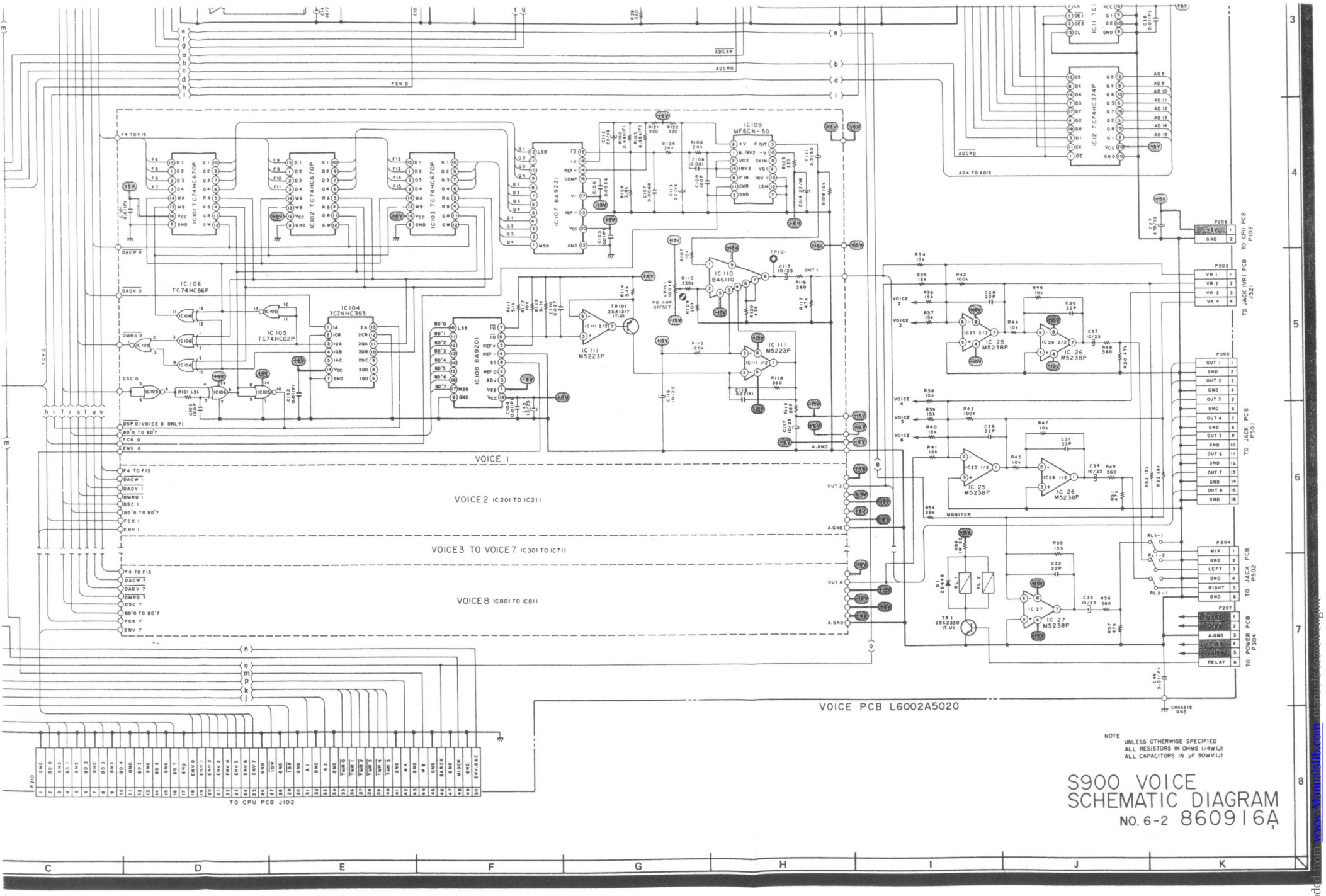

Downloaded from www.Manualslib.com manuals search engine

Downloaded from www.Manualslib.com manuals search engine

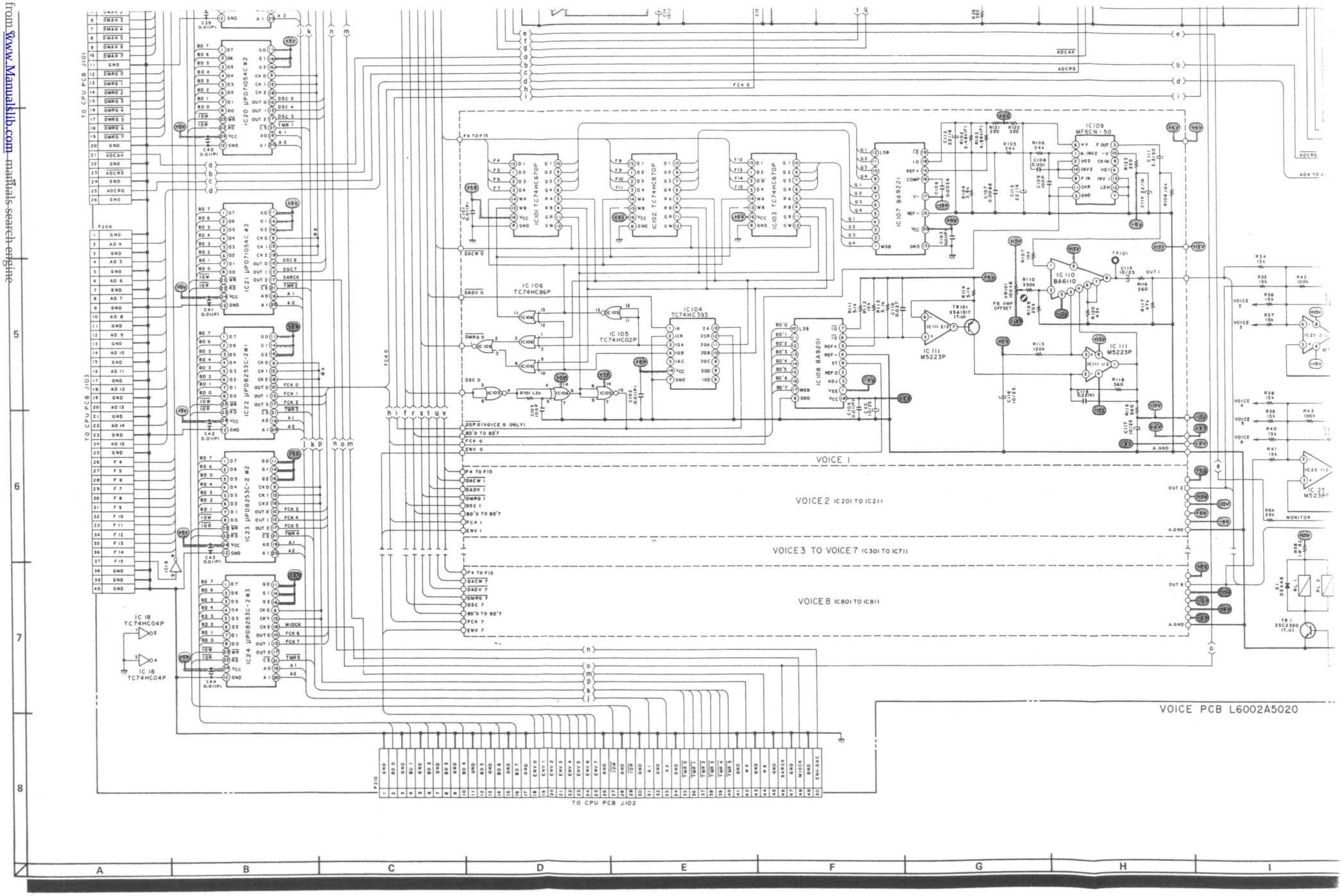

Downloaded from www.Manualslib.com manuals search engine

S900

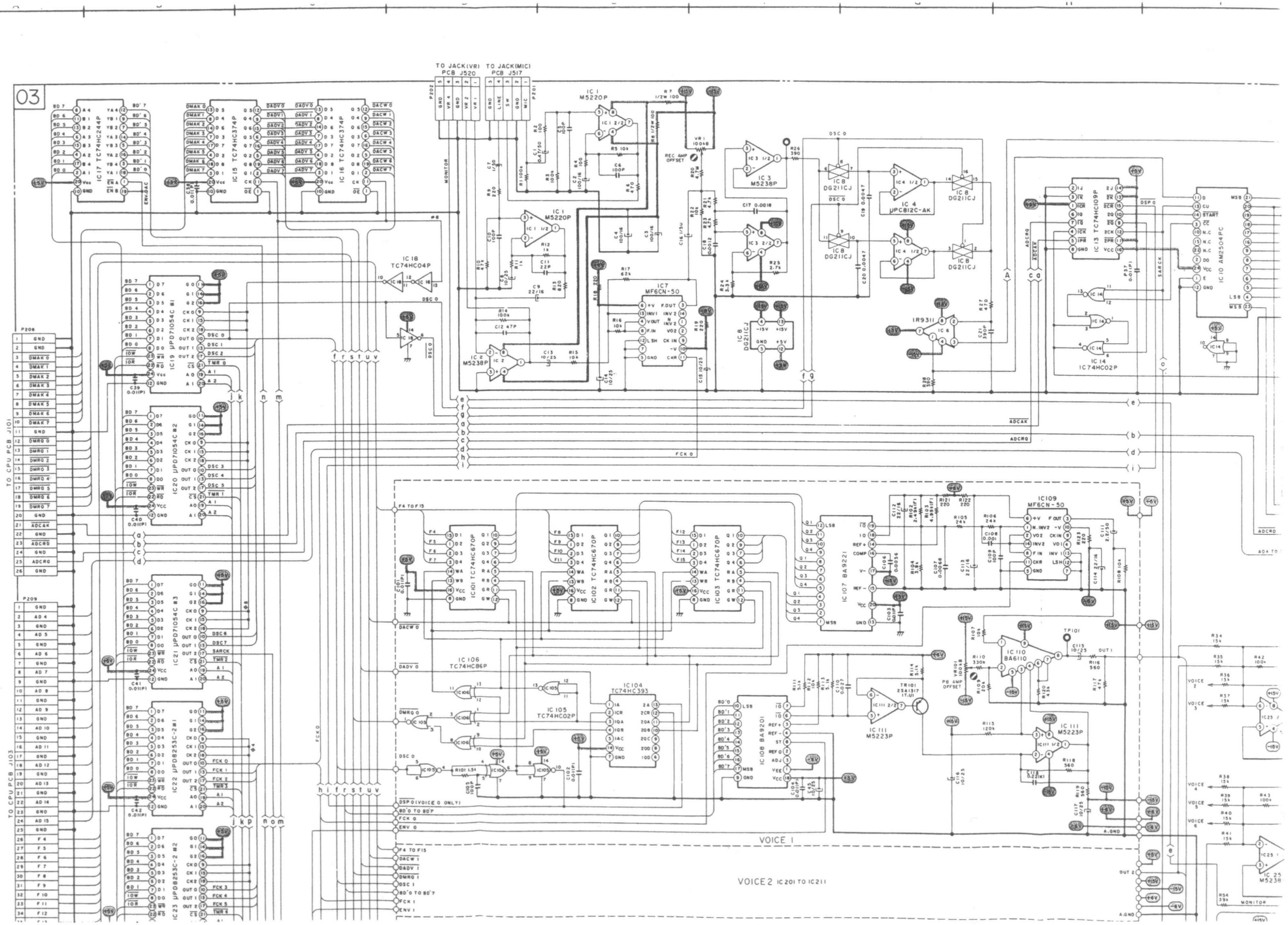

Downloaded from www.Manualslib.com manual's search engine

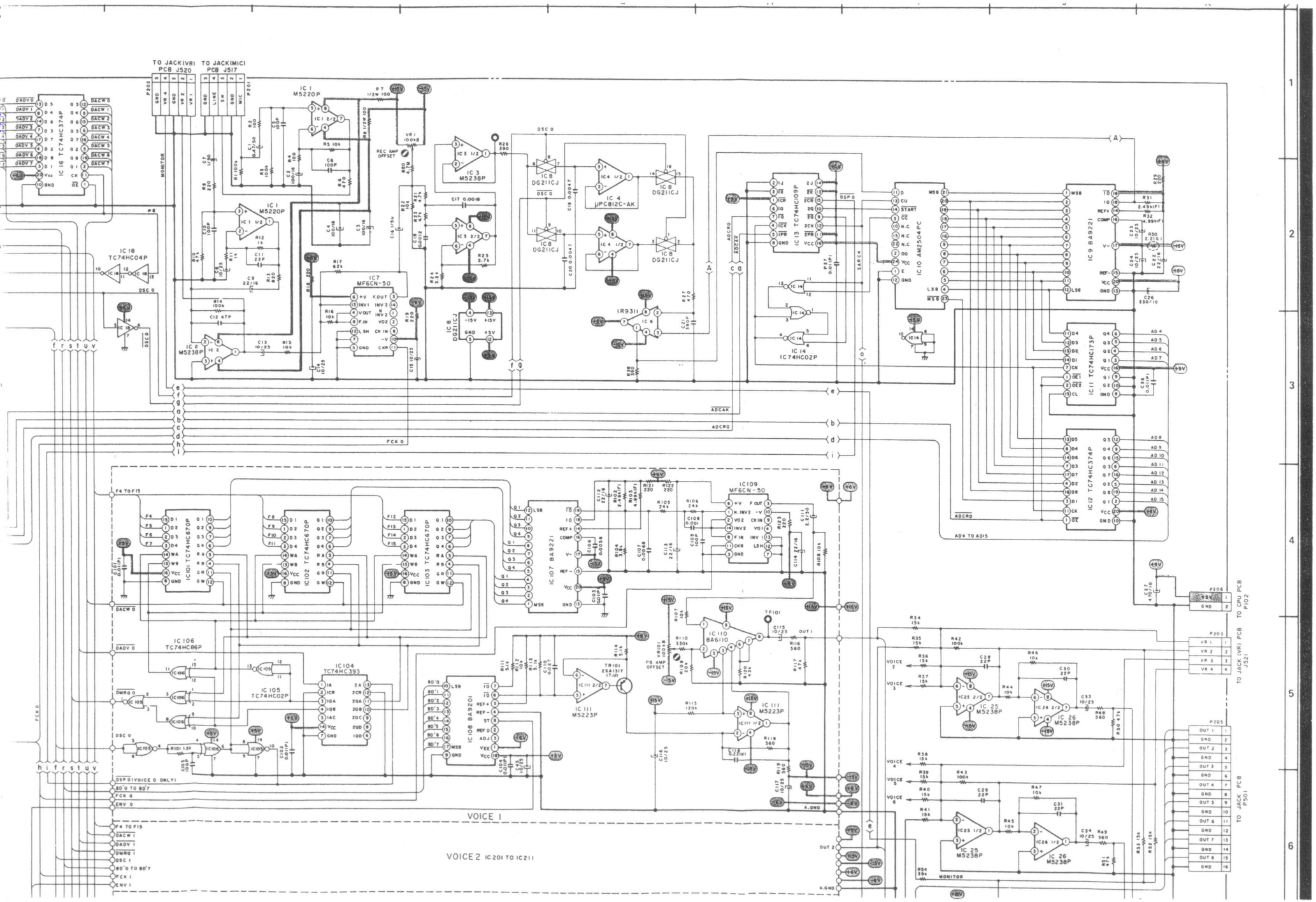

Downloaded from www.Manualslib.com manuals search engine

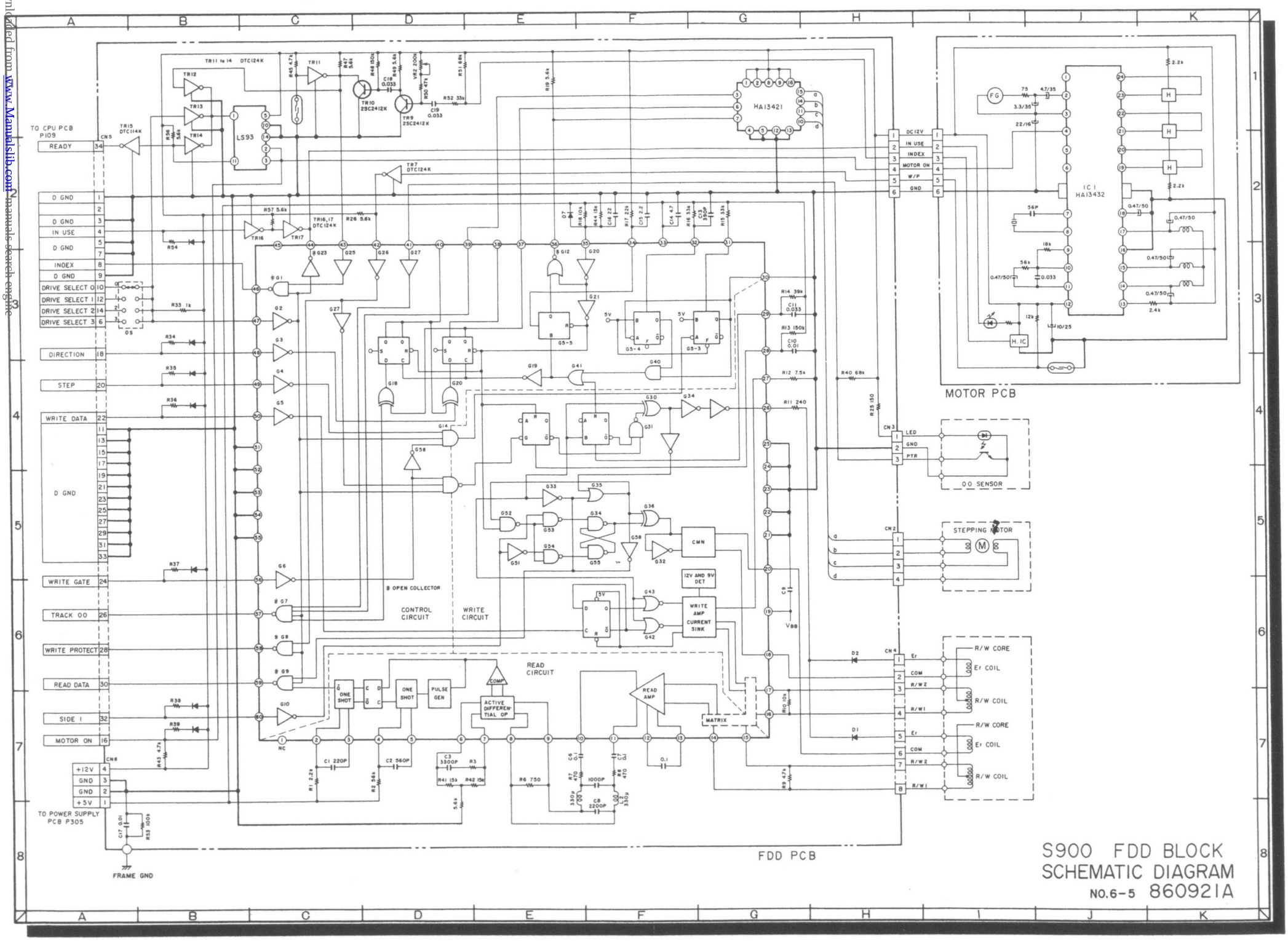

Downloaded from www.Manualslib.com manuals search engine

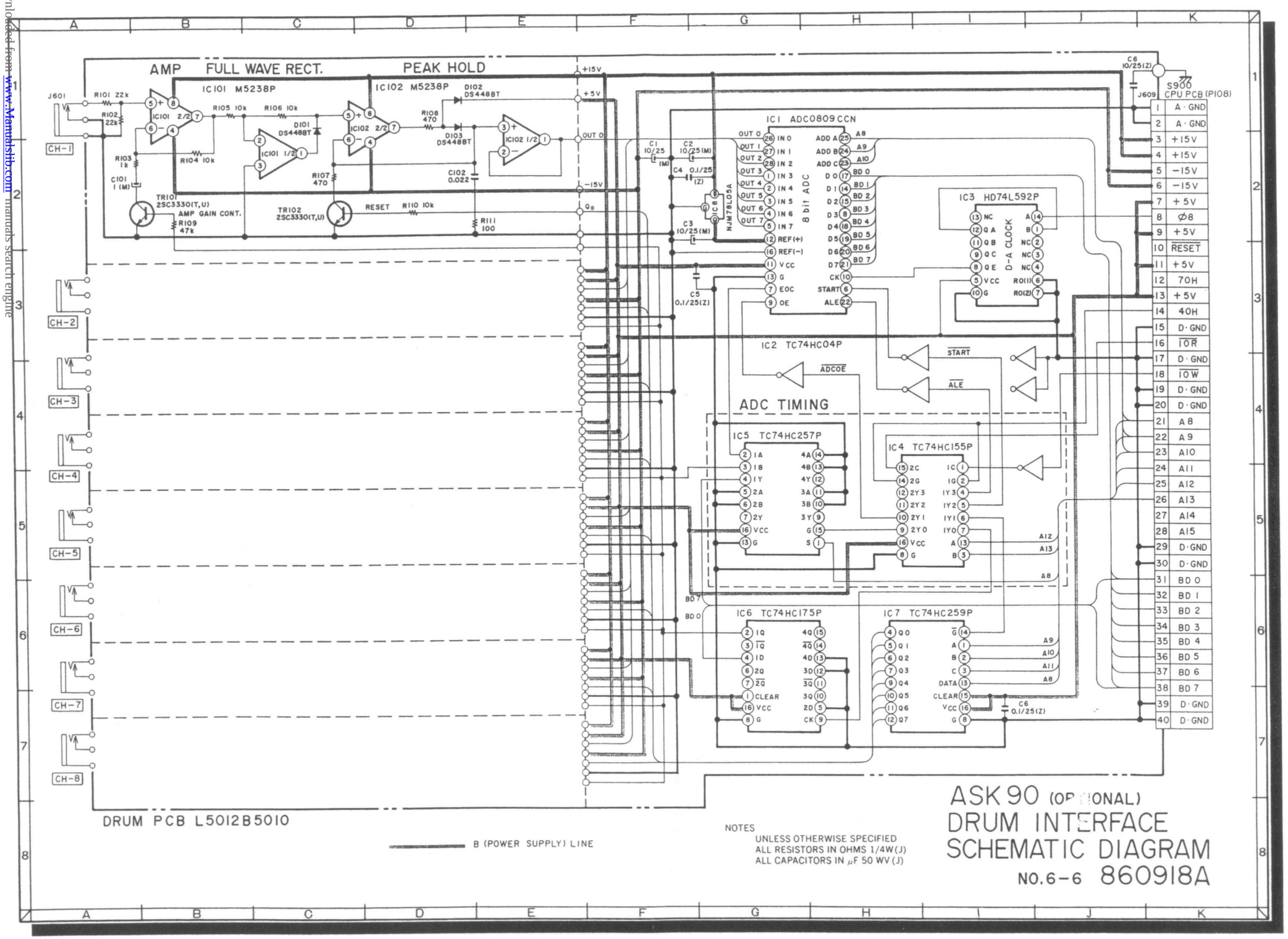

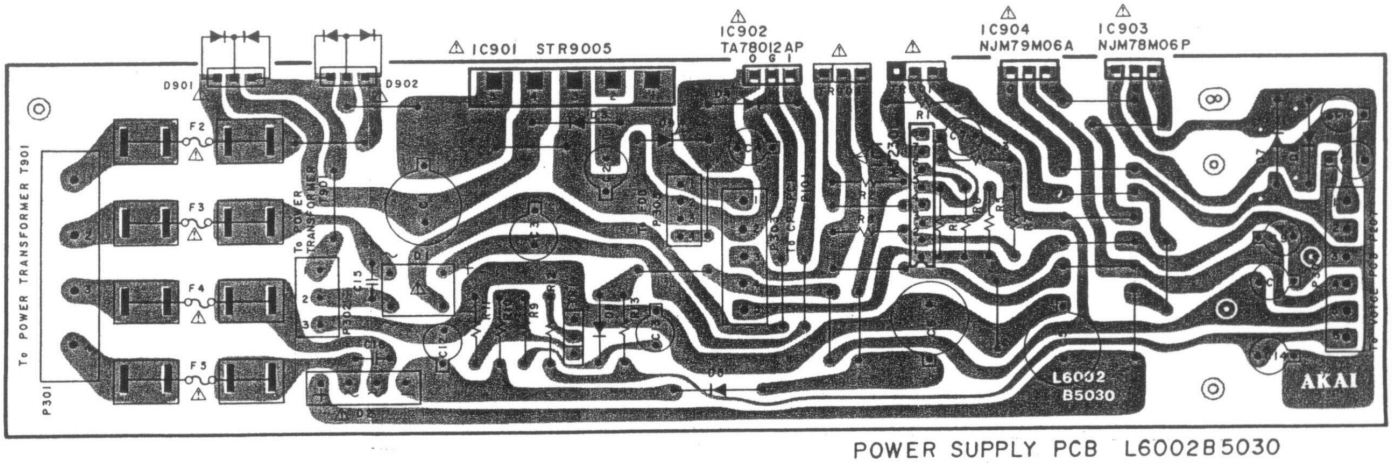

POWER SUPPLY PCB L6002B5030

B
: PNP TRANSISTOR

B
: NPN TRANSISTOR

2SD3330

2SB891
2SD1189

WARNING: ⚠INDICATES SAFETY CRITICAL COMPONENTS. FOR CONTINUED SAFETY, REPLACE SAFETY CRITICAL COMPONENTS ONLY WITH MANUFACTURER'S RECOMMENDED PARTS

AVERTISSEMENT: ⚠IL INDIQU LES COMPOSANTS CRITIQUES DE SÛRETÉ. POUR MAINTENIR LE DEGRE DE SECURITE DE L'APPAREIL NE REMPLACER LES CONPOSANTS DONT LE FONCTIONNEMENT EST CRITIQUE POUR LA SECURITE QUE PAR DES PIECES RECOMMANDEES PAR LE FABRICANT

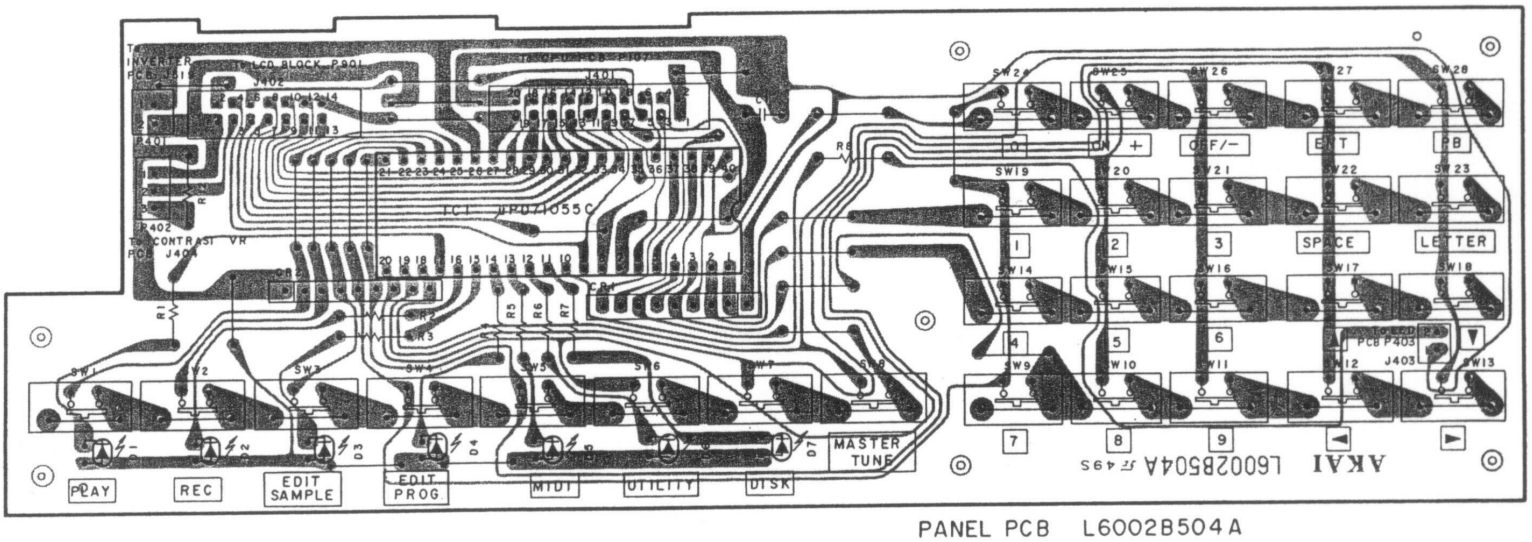

PANEL PCB L6002B504A

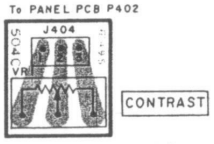

CONTRAST VR PCB
L6002B504C

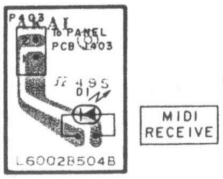

LED PCB
L6002B504B

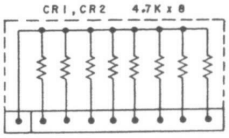

Downloaded from www.Manualslib.com manuals search engine

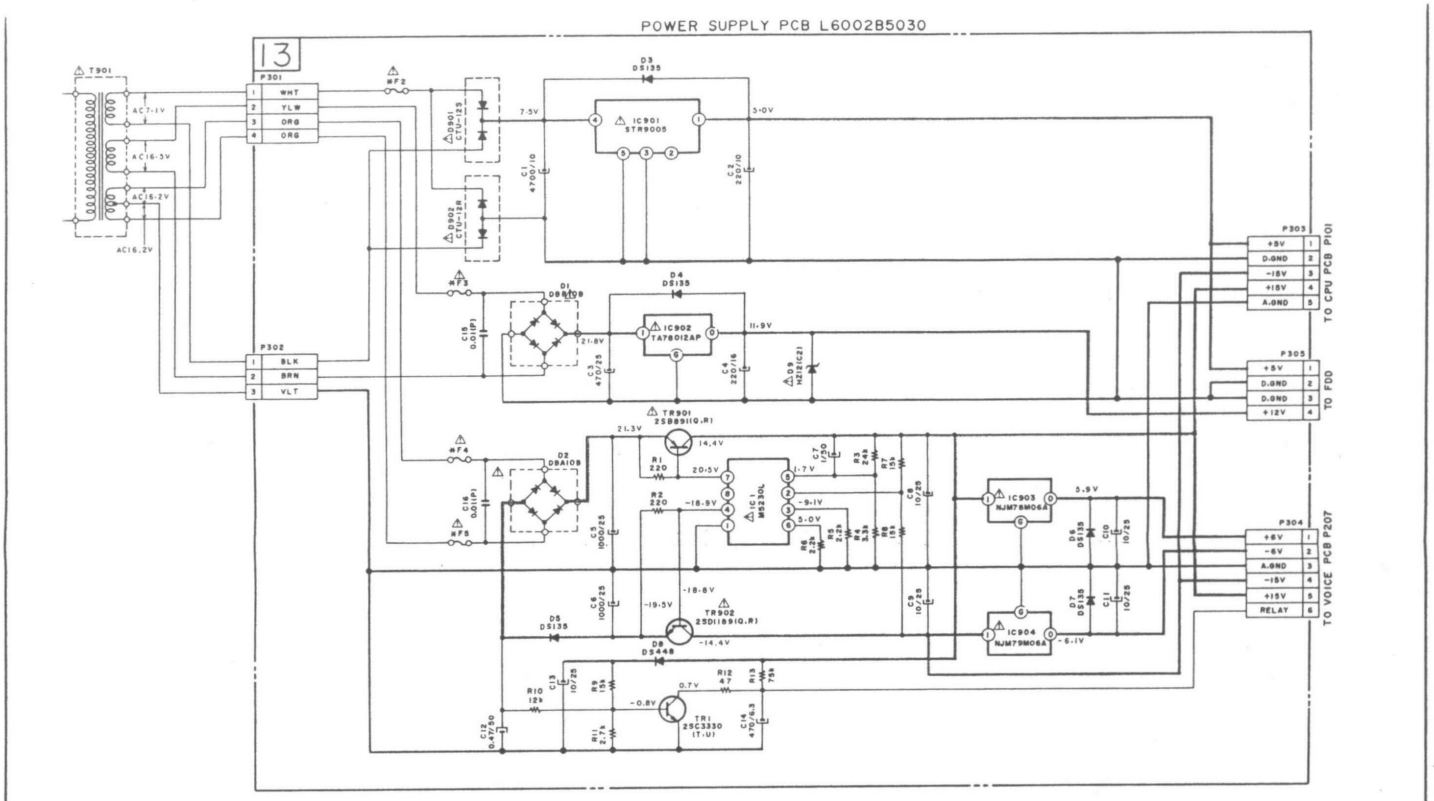

*	F2	F3	F4	F5
J	250V 4A	250V 630mA	250V 1A	250V 1A
C.A	125V 4A	125V 630mA	125V 1A	125V 1A
E.V.B.S	T3.15A	T630mA	T800mA	T800mA

NOTES
UNLESS OTHERWISE SPECIFIED
ALL RESISTORS IN OHMS 1/4W(J)
ALL CAPACITORS IN μF 50 WV(J)
(FS) = FAIL SAFE RESISTORS

WARNING: ⚠ INDICATES SAFETY CRITICAL COMPONENTS. FOR CONTINUED SAFETY, REPLACE SAFETY CRITICAL COMPONENTS ONLY WITH MANUFACTURER'S RECOMMENDED PARTS
AVERTISSEMENT: ⚠ IL INDIQU LES COMPOSANTS CRITIQUES DE SÛRETÉ. POUR MAINTENIR LE DEGRE DE SECURITE DE L'APPAREIL NE REMPLACER LES CONPOSANTS DONT LE FONCTIONNEMENT EST CRITIQUE POUR LA SECURITE QUE PAR DES PIECES RECOMMANDEES PAR LE FABRICANT

S900 POWER SUPPLY SCHEMATIC DIAGRAM
NO.6-3 860915A

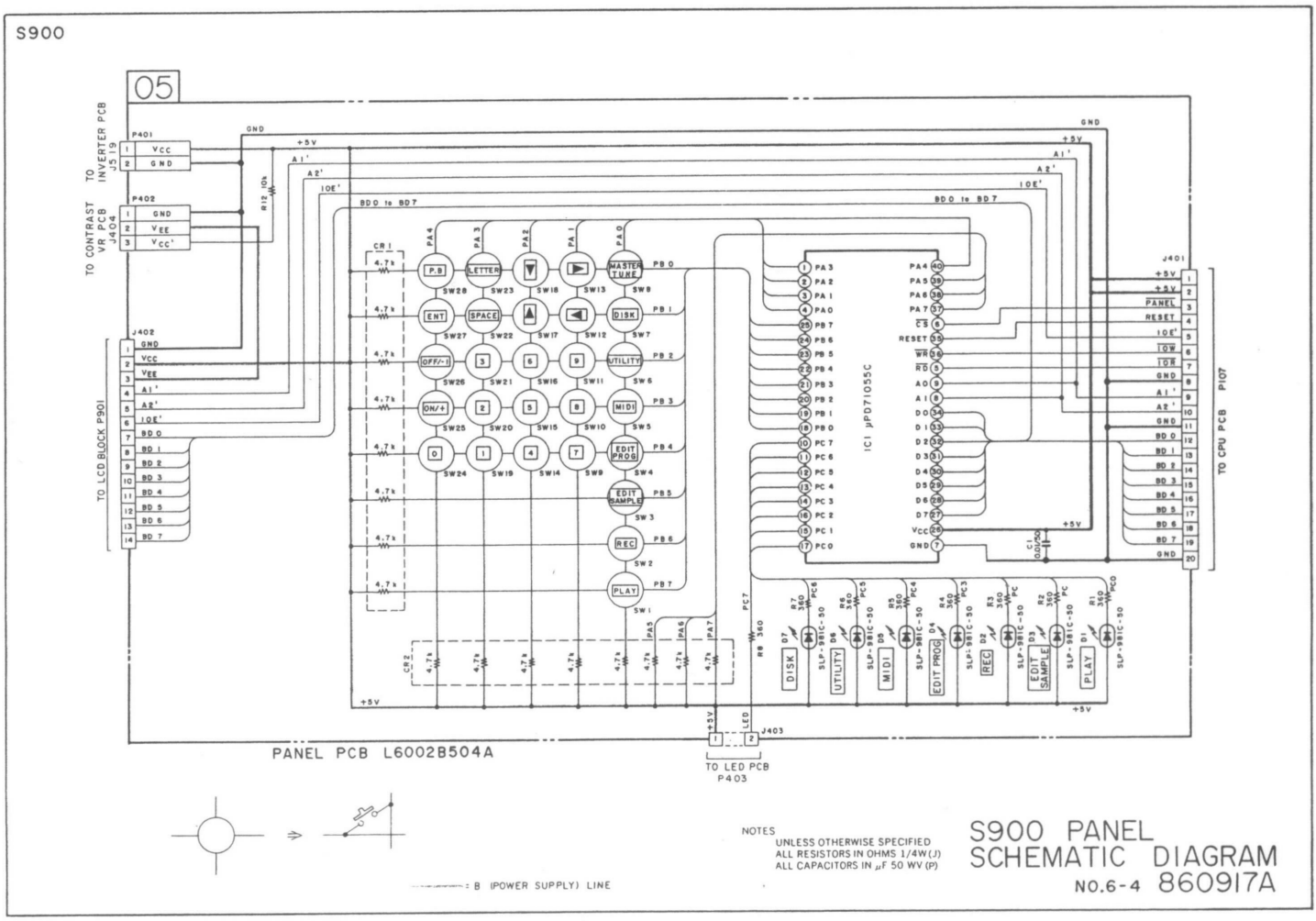

NOTES
UNLESS OTHERWISE SPECIFIED
ALL RESISTORS IN OHMS 1/4W(J)
ALL CAPACITORS IN μF 50 WV(P)

S900 PANEL SCHEMATIC DIAGRAM
NO.6-4 860917A

Downloaded from www.Manualslib.com manuals search engine

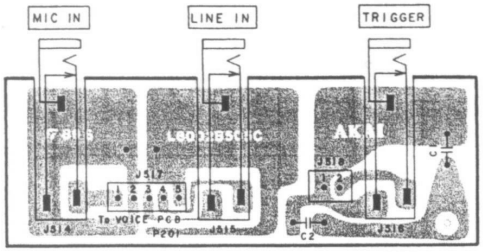

INPUT JACK PCB L6002B505C

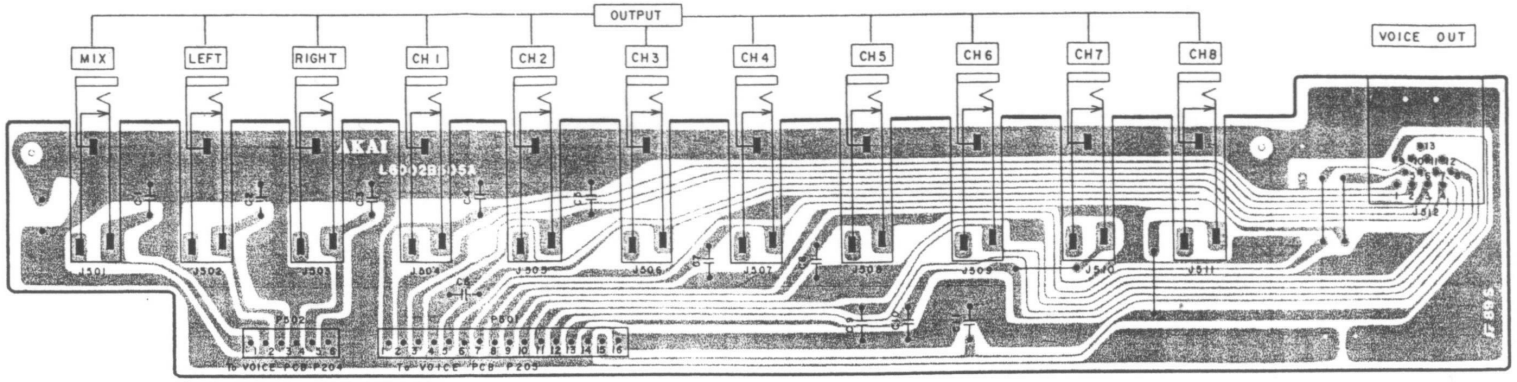

OUTPUT JACK PCB L6002B505A

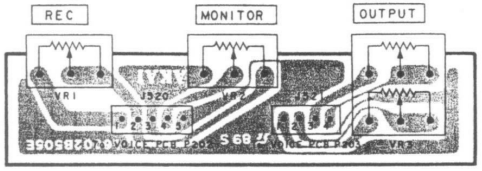

VR PCB L6002B505E

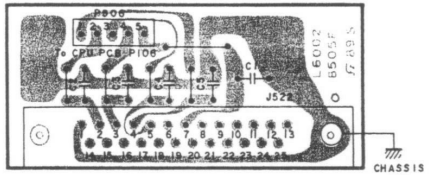

CONNECTOR PCB L6002B505F

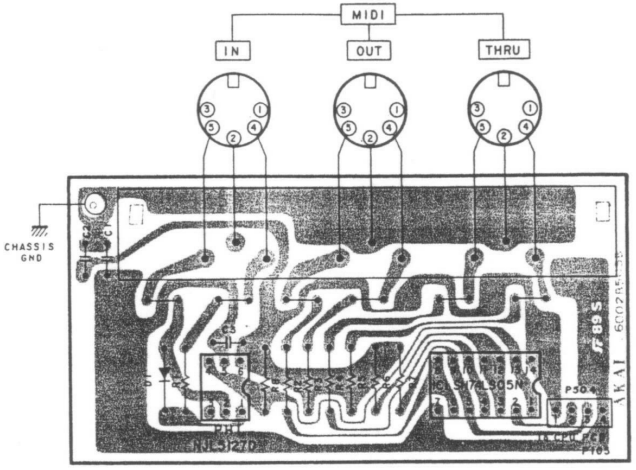

MIDI JACK PCB L6002B505B

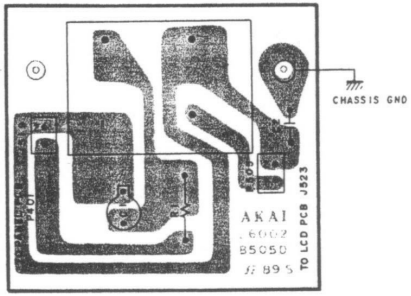

INVERTOR PCB L6002B505D

※	J	C.A	E.V.S.B
F1	1.25A250V	1.6A 125A	T500mA 250V

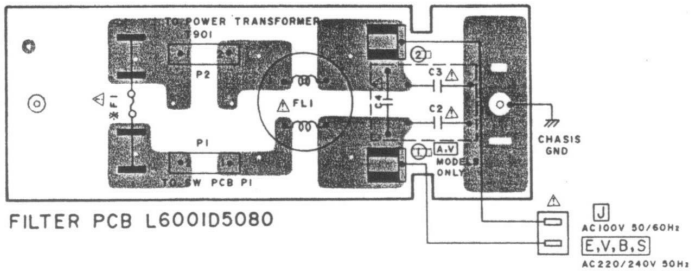

FILTER PCB L6001D5080

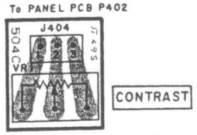

CONTRAST VR PCB
L6002B504C

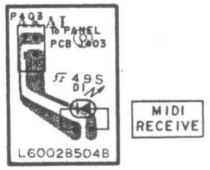

LED PCB
L6002B504B

WARNING: ⚠ INDICATES SAFETY CRITICAL COMPONENTS. FOR CONTINUED SAFETY, REPLACE SAFETY CRITICAL COMPONENTS ONLY WITH MANUFACTURER'S RECOMMENDED PARTS

AVERTISSEMENT: ⚠ IL INDIQUE LES COMPOSANTS CRITIQUES DE SÉCURITÉ. POUR MAINTENIR LE DEGRÉ DE SÉCURITÉ DE L'APPAREIL, NE REMPLACER QUE DES PIÈCES RECOMMANDEES PAR LE FABRICANT

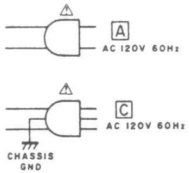

Downloaded from www.Manualslib.com manuals search engine