AKAI SERVICE MANUAL

(ADDITIONAL)

This additional Schematic Diagram is made for the CPU PCB of model S900.

Use this additional Schematic Diagram with the model S900 Service Manual which published previously.

DIGITAL SAMPLER

MODEL S900

INFORMATION OF IC's

NAME OF IC	FUNCTION
TC74HC00P	Quad 2-Input NAND Gate
TC14HC02P	Quad 2-Input NOR Gate
TC74HC04P	Hex Inverters
TC74HC08P	Quad 2-Input AND Gate
TC74HC32P	Quad 2-Input OR Gate
TC74HC138P	3 to 8 Demultiplexer
TC74HC139P	DUAL 2 to 4 Demultiplexer
TC74HC157P	2 to 1 Data Selector
TC74HC158P	Quad 2 to 1 Data Selector
TC74HC191P	4-Bit Synchronous Binary UP/DOWN Counter
TC74HC245P	Octal 3-Sate Bus Tranceiver
TC74HC244P	Octal 3-State Bus Buffer
TC74HC257P	Quad 2-Channel 3 State Multiplexer
TC74HC259P	8-Bit Addressable Latch
TC74HC283P	4-Bit Binary Adder with Fast Carry
TC74HC373P	Octal D-Flip-Flop
TC74HC393P	Dual 4-bit Binary Counter
TC74HC4002P	Dual 4-Input NOR Gate
HD74LS04P	Hex Inverter
HD74LS08P	Quad 2-Input AND Gate
HD74LS14P	Hex Schmitt Trigger Inverter
HD7406P	Hex Inverter
HD75188P	Quand Line Drive
HD75189P	Quand Line Drive
HD6850P	Communication Interface Adapter
UPD71011C	Clock Pulse Generator Drive
UPD71051C	Serial Control Unit
UPD71059C	Interrupt Control Unit
UPD71071C	Direct Memory Access Controller
UPD70116C	16 Bit Micro Processor
UPD7265C	Programmable Floppy Disk Drive
SED9420C	VFO type FDD Data Separator
MN41256A	4 × 256k-Bit N-Mos Dynamic RAM
TMM27128AD-20	8 × 16k-Bit EP-ROM
TMM2764D-2	256k-Bit EP-ROM

HD74LS04P (HEX INVERTER)
(IC42)

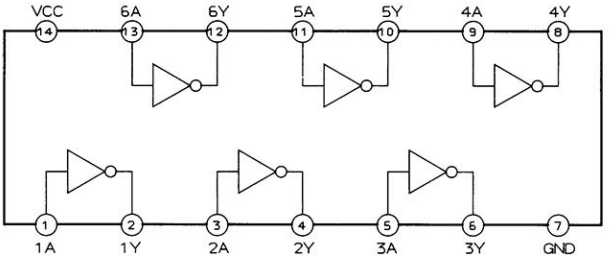

HD74LS14P (HEX SCHMITT TRIGGER, INVERTER)
(IC39.40)

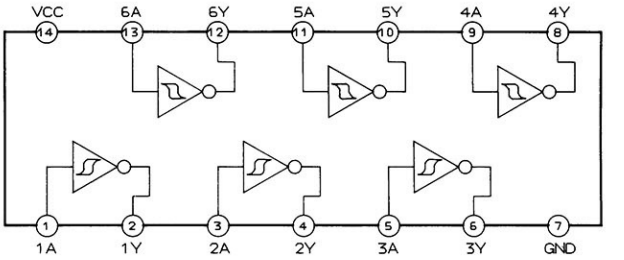

HD6850P (IC8)
[COMMUNICATION INTERFACE ADAPTER]

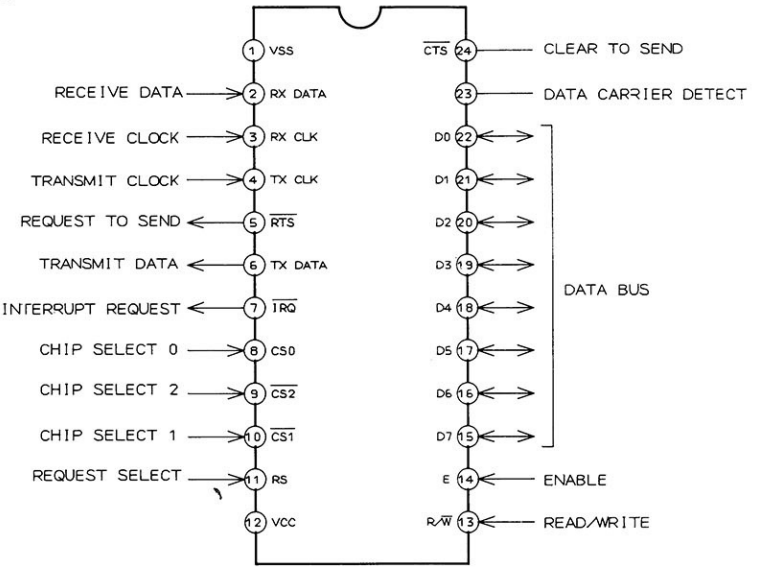

MN41256A-08 (4X256K-BIT N-MOS DYNAMIC RAM)
(IC45 TO IC72)

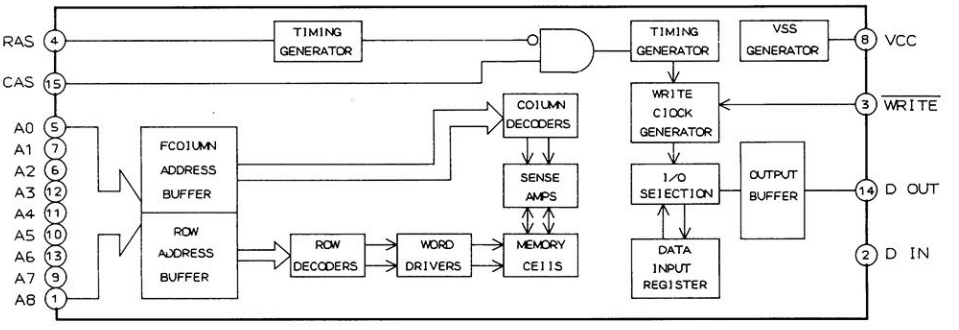

TC74HC138P [3 TO 8 DEMULTIPLEXER]
[IC22 TO 24]

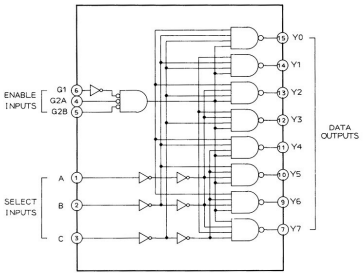

TRUTH TABLE

INPUTS					OUTPUTS							
ENABLE		SELECT										
G1	G2	C	B	A	Y0	Y1	Y2	Y3	Y4	Y5	Y6	Y7
X	H	X	X	X	H	H	H	H	H	H	H	H
L	H	X	X	X	H	H	H	H	H	H	H	H
H	L	L	L	L	L	H	H	H	H	H	h	H
H	L	L	L	H	H	L	h	H	H	H	H	H
X	H	X	X	X	H	H	L	H	H	H	H	H
H	L	L	H	L	H	H	H	L	H	H	H	H
H	L	L	H	H	H	H	H	H	L	H	H	H
H	L	H	L	L	H	H	h	H	H	L	H	H
H	L	H	H	L	H	H	H	H	H	H	L	H
H	L	H	H	H	H	H	h	H	H	H	H	L

TC74HC139P [DUAL 2 TO 4 DEMULTIPLEXER]
(IC29)

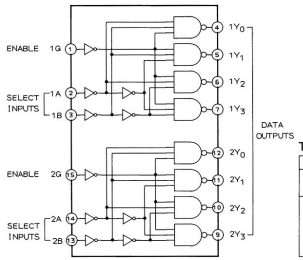

TRUTH TABLE

INPUTS			OUTPUTS			
ENABLE	SELECT					
G	B	A	Y0	Y1	Y2	Y3
H	X	X	H	H	H	H
H	X	X	H	H	H	H
H	X	X	H	H	H	H
H	X	X	H	H	H	H
H	X	X	H	H	H	H

SED9420CAC (VFO TYPE FDD DATA SEPARATOR)
(IC10)

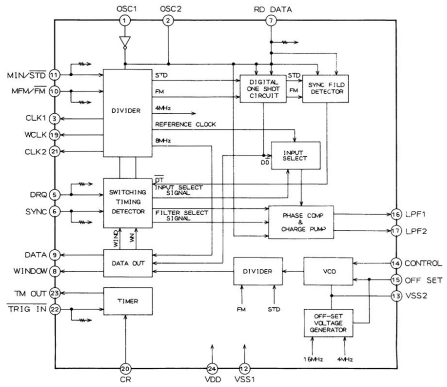

TC74HC157P [2 TO 1 DATA SELECTOR]
(IC82, 89)

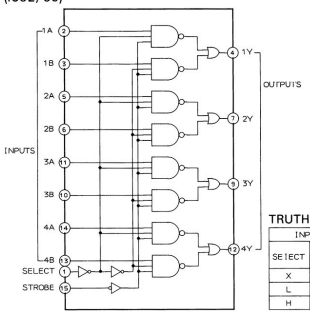

TRUTH TABLE

INPUTS		OUTPUT
SELECT	STROBE G	Y
X	H	L
L	L	A
H	L	B

TC74HC158P (QUAD 2 TO 1 DATATOR)
(IC83, 84)

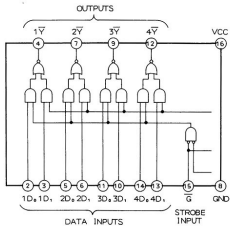

TC74HC244P (OCTAL 3 STATE BUS BUFFER)
(IC26)

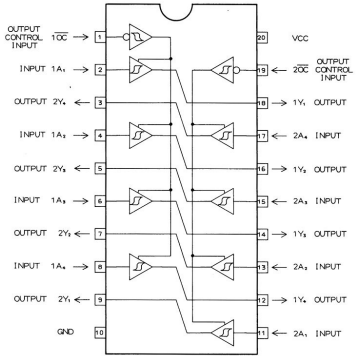

PIN No.	SYMBOL	FUNCTION
1	OSC1	OSC IN
2	OSC2	OSC OUT
3	CLK1	FDC CLOCK OUT STD FD: 8MHz MINI FD: 4MHz
4	TEST 2	NC OR PULL UP (VDD)
5	DRQ	DATA REQUEST IN
6	SYNC	SYNC REQUEST IN
7	RD DATA	FDD. READ DATA IN
8	WINDOW	DATA WINDOW OUT
9	DATA	
10	MFM/$\overline{FM}$	MFM/FM SELECT
11	MIN/$\overline{STD}$	FD SELECT 5 INCH; High 8 INCH; Low
12	Vss1	DIGITAL GND
13	Vss2	ANALOG GND (VCO GND)
14	CONTROL	VCO CONTROL
15	OFF SET	VCO OFF SET
16	LPF1	PLL LOOP FILTER CONNECTOR
17	LPF2	PLL LOOP FILTER CONNECTOR
18	TEST	TEST NC
19	WCLK	FDC SAVE CLOCK ● 8 INCH/MFM; T=1 μs ● 8 INCH/FM; T=2 μs ● 5 INCH/MFM; T=2 μs ● 5 INCH/FM; T=4 μs
20	CR	
21	CLK2	FDC CLOCK OUT ● 8 INCH; 2 MHz ● 5 INCH; 1 MHz
22	$\overline{TRIG\ IN}$	TIMER TRIGGER IN
23	TM OUT	(For HEAD LOAD. MOTORSTOP ETC.)
24	VDD	+5V

TC74HC245P [OCTAL 3 STATE TRANSCEIVER]
(IC18)

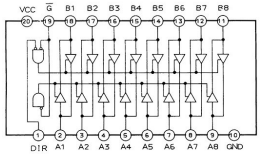

FUNCTION TABLE

CONTROL INPUTS		OPERATION
G	DIR	
L	L	B DATA TO A BUS
L	H	A DATA TO B BUS
H	X	ISOLATION

TC74HC259P [8 BIT ADABLE LATCHE] (IC25)

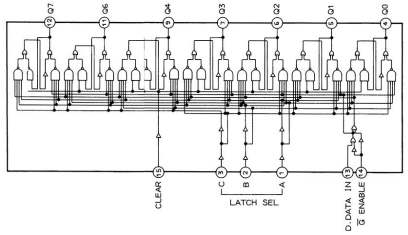

TC74HC373 [3 STATE OCTALD-TYPE LATCH]
(IC13 TO 17)

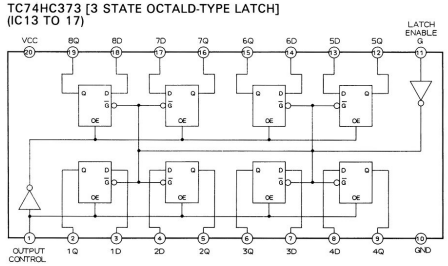

TRUTH TABLE

OUTPUT CONTROL	LATCH ENABLE G	DATA	373 OUTPUT
L	H	H	H
L	H	L	H
L	L	X	Q_0
H	X	X	Z

TC74HC393P (DUAL) 4-BIT BINARY COUNTER)
(IC19)

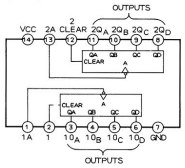

μPD71011C (CLOCK PULS GENERATOR DRIVE)
(IC2)

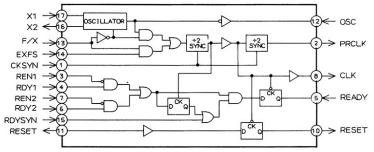

LOCATION OFCOMPONENTS

ICS

IC1···E5	IC46··G5
IC2···D3	IC47··G5
IC3···D2	IC48··G4
IC4···B2	IC49··G4
IC5···C2	IC50··G4
IC6···A2	IC51··G3
IC7···C6	IC52··G3
IC8···D6	IC53··H5
IC9···B4	IC54··H5
IC10··B5	IC55··H5
IC11··D5	IC56··H4
IC12··E5	IC57··H4
IC13··E6	IC58··H4
IC14··F6	IC59··H3
IC15··E6	IC60··H3
IC16··F6	IC61··I5
IC17··F6	IC62··I5
IC18··E6	IC63··I5
IC19··D4	IC64··I4
IC20··D4	IC65··I4
IC21··D4	IC66··I4
IC22··F1	IC67··I3
IC23··E2	IC68··I3
IC24··F2	IC69··F5
IC25··E1	IC70··F5
IC26··A1	IC71··F5
IC27··B6	IC72··F4
IC28··A6	IC73··G2
IC29··A6	IC74··H2
IC30··B6	IC75··I2
IC31··C3	IC76··G1
IC32··E2	IC77··H1
IC33··E2	IC78··H1
IC34··A5	IC79··F4
IC35··C5	IC80··F3
IC36··A6	IC81··F3
IC37··C4	IC82··H6
IC38··A3	IC83··G6
IC39··A4	IC84··G6
IC40··A3	IC85··I6
IC41··A4	IC86··I6
IC42··C4	IC87··I6
IC43··C5	IC88··H6
IC44··C5	IC89··F2
IC45··G5	IC90··B3

CONNECTORS

J101··B1
J102··D.E1
J103··G.H1

P101··A6
P102··A1
P103··B7
P104··B7
P105··A2
P106··A2
P107··D7
P108··F.G7
P109··A3, 4

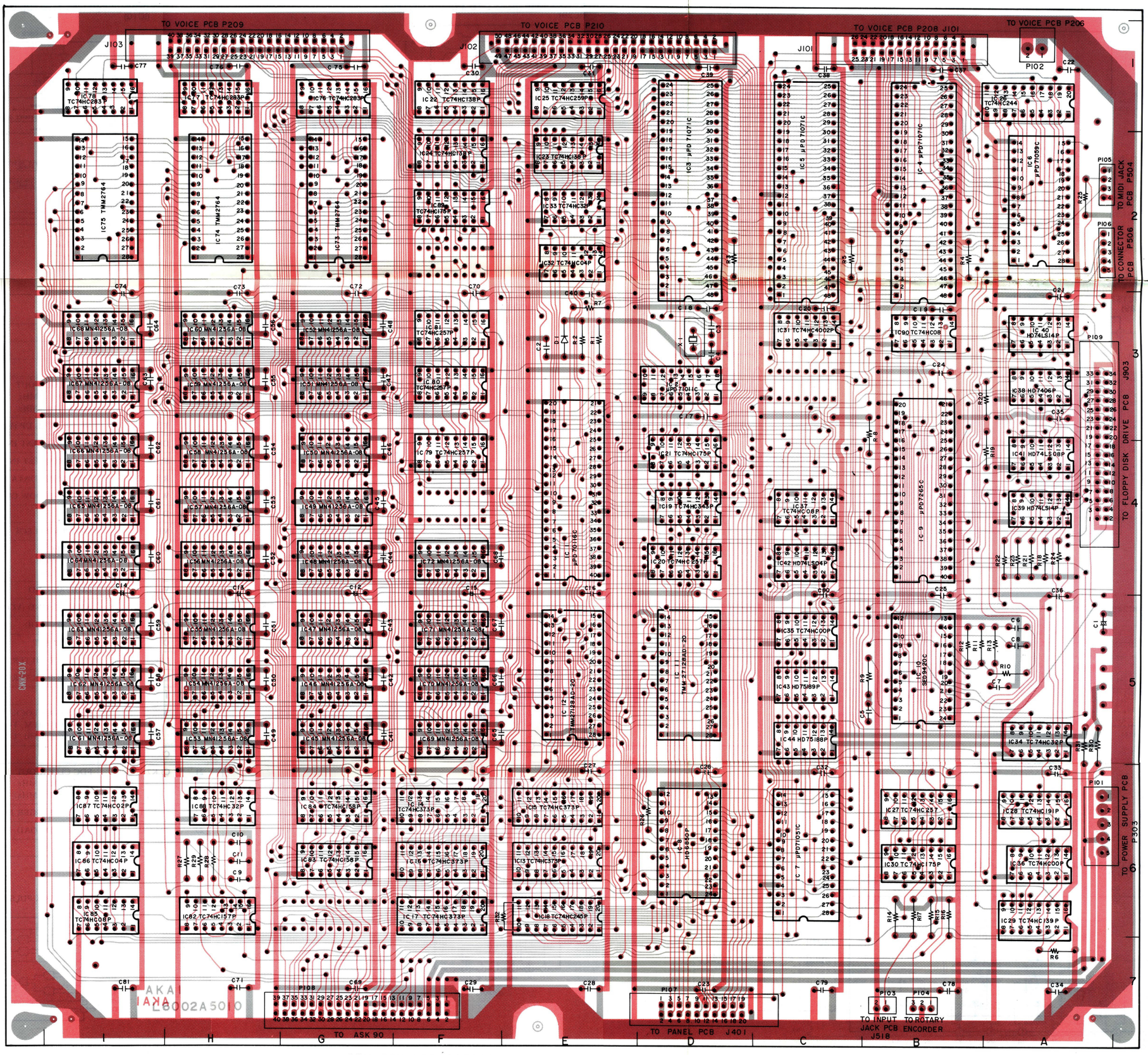

CPU PCB L6002A5020

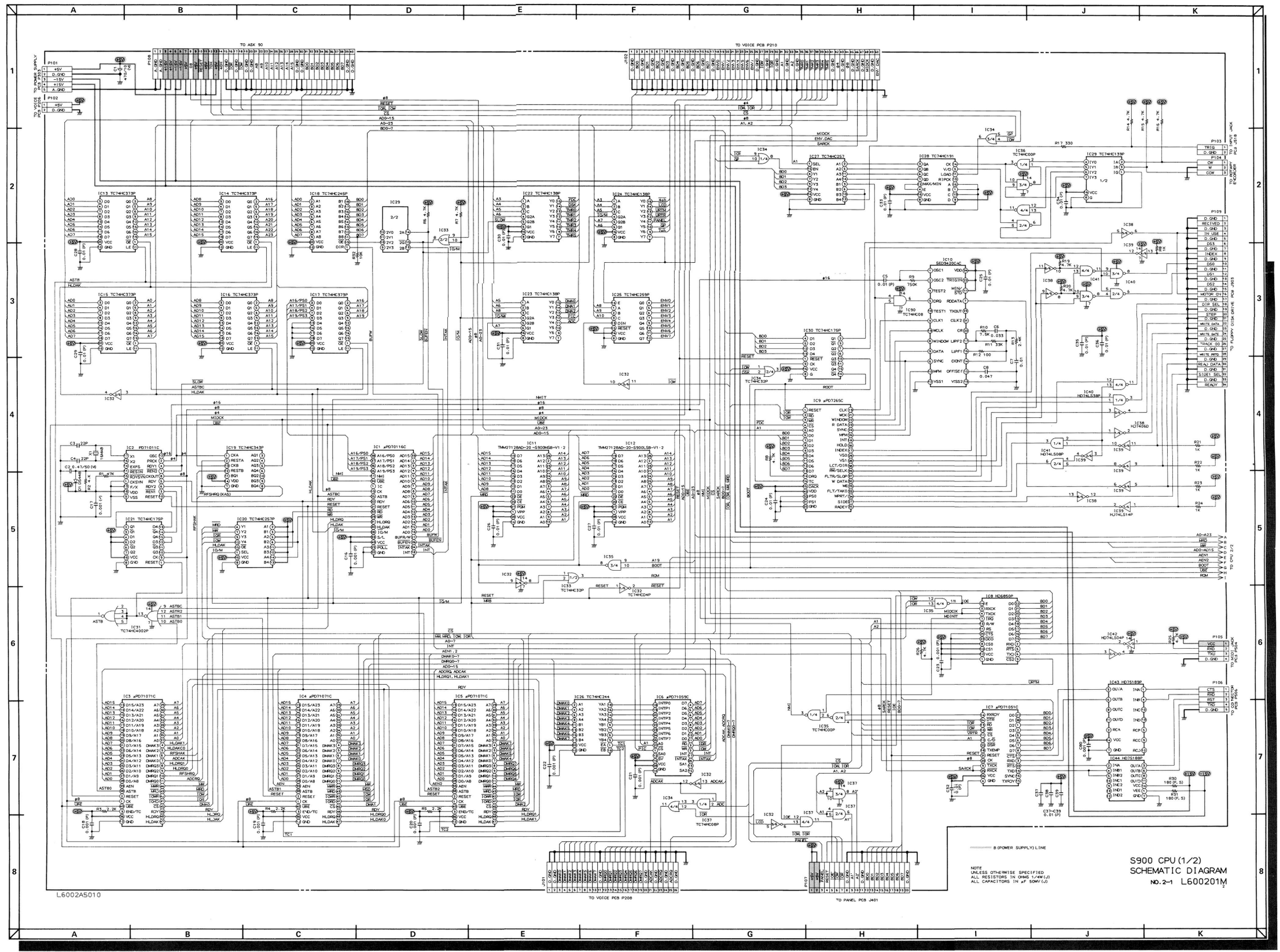
TO ASK 90
TO VOICE PCB P210
TO POWER SUPPLY
TO VOICE PCB P208
TO PANEL PCB J401
TO MPIT JACK PCS J518
TO EXCITER
TO FLOPPY DISK DRIVE PCB J903
TO CPU 2/2
TO ACS PS34
TO ACS PS36
B (POWER SUPPLY) LINE
NOTE
UNLESS OTHERWISE SPECIFIED
ALL RESISTORS IN OHMS 1/4W(J)
ALL CAPACITORS IN μF 50WV(J)
S900 CPU (1/2)
SCHEMATIC DIAGRAM
NO.2-1 L600201M
L6002A5010

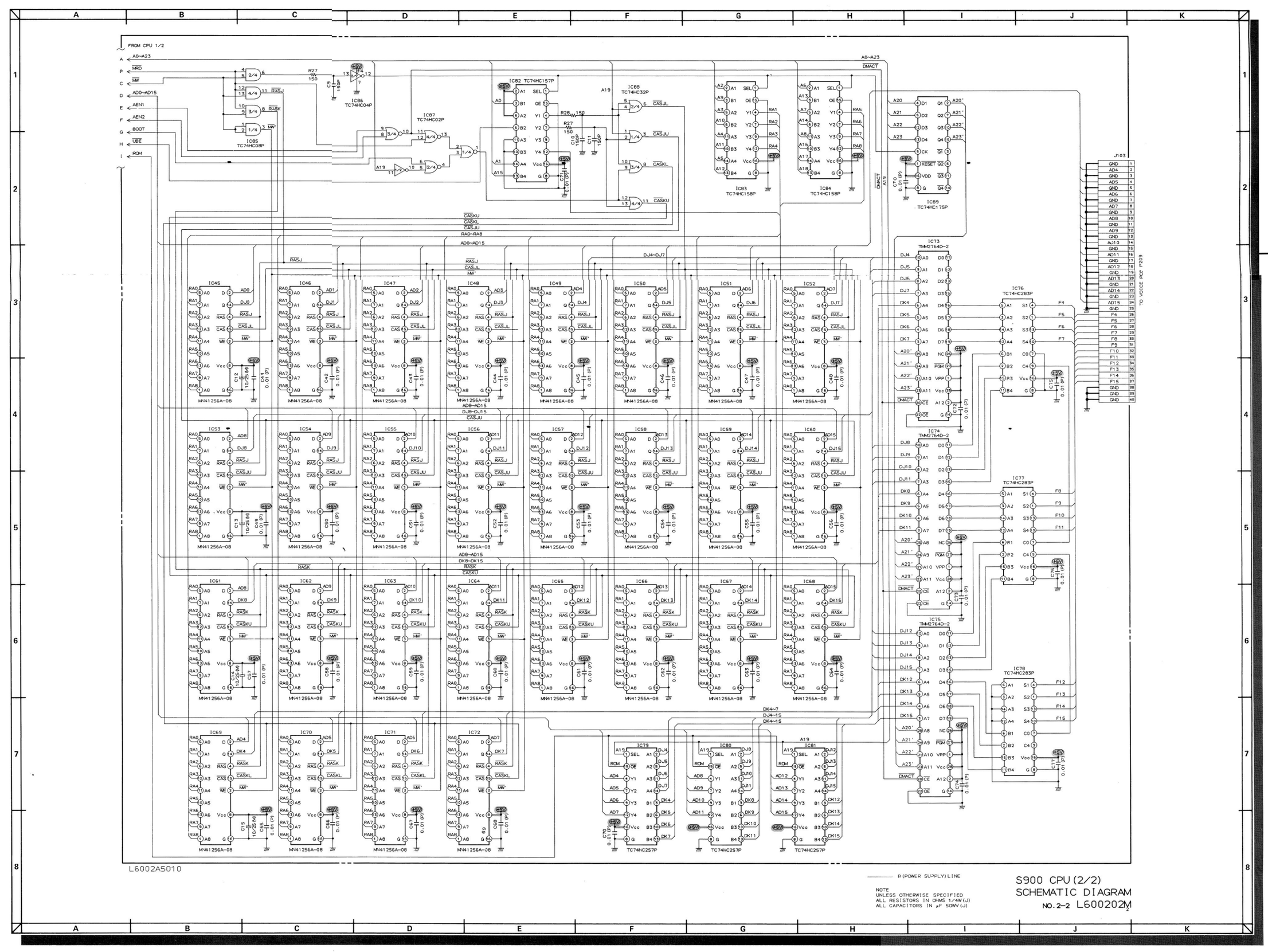
FROM CPU 1/2
A0~A23
MRD
MW
AD0~AD15
AEN1
AEN2
BOOT
UBE
ROM
IC85 TC74HC08P
IC86 TC74HC04P
IC87 TC74HC02P
IC82 TC74HC157P
IC88 TC74HC32P
IC83 TC74HC158P
IC84 TC74HC158P
IC89 TC74HC175P
IC73 TMM2764D-2
IC74 TMM2764D-2
IC75 TMM2764D-2
IC76 TC74HC283P
IC77 TC74HC283P
IC78 TC74HC283P
IC45 MN41256A-08
IC79 TC74HC257P
IC80 TC74HC257P
IC81 TC74HC257P
J103
TO VOICE PCB P209
L6002A5010
B (POWER SUPPLY) LINE
NOTE
UNLESS OTHERWISE SPECIFIED
ALL RESISTORS IN OHMS 1/4W(J)
ALL CAPACITORS IN μF 50WV(J)
S900 CPU (2/2)
SCHEMATIC DIAGRAM
NO. 2-2 L600202M