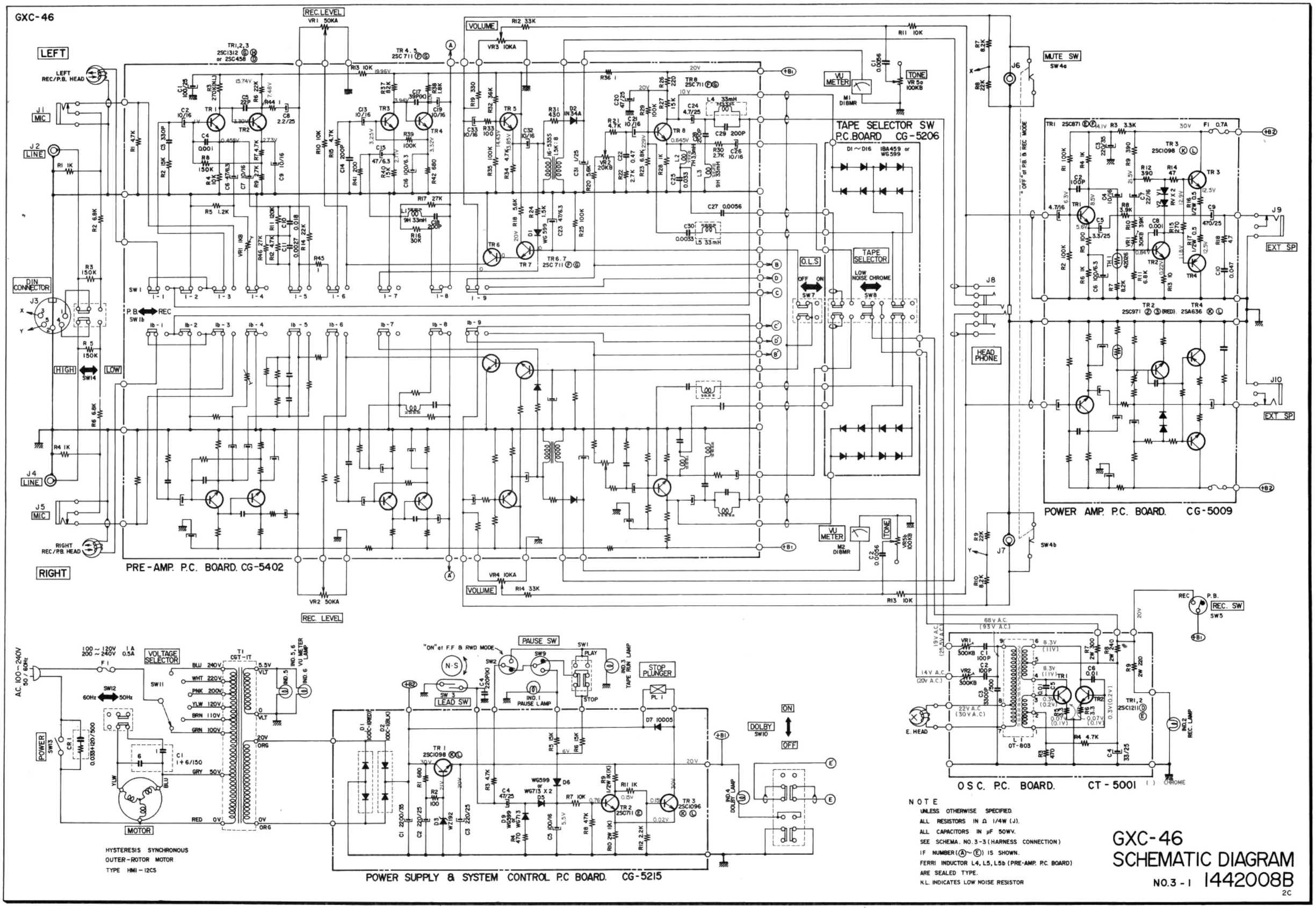
GXC-46
LEFT
RIGHT
PRE-AMP. P.C. BOARD. CG-5402
TAPE SELECTOR SW P.C.BOARD CG-5206
POWER AMP. P.C. BOARD. CG-5009
POWER SUPPLY & SYSTEM CONTROL P.C BOARD. CG-5215
OSC. P.C. BOARD. CT-5001
REC. LEVEL
VOLUME
VU METER
TONE
MUTE SW
TAPE SELECTOR
LOW NOISE CHROME
O.L.S
HEAD PHONE
EXT SP
DIN CONNECTOR
VOLTAGE SELECTOR
MOTOR
PAUSE SW
STOP PLUNGER
DOLBY
REC. SW
E. HEAD
REC. LAMP
HYSTERESIS SYNCHRONOUS
OUTER-ROTOR MOTOR
TYPE HMI-12CS
NOTE
UNLESS OTHERWISE SPECIFIED.
ALL RESISTORS IN Ω 1/4W (J).
ALL CAPACITORS IN μF 50WV.
SEE SCHEMA. NO.3-3 (HARNESS CONNECTION)
IF NUMBER (Ⓐ~Ⓔ) IS SHOWN.
FERRI INDUCTOR L4, L5, L5b (PRE-AMP. P.C. BOARD)
ARE SEALED TYPE.
N.L. INDICATES LOW NOISE RESISTOR
GXC-46
SCHEMATIC DIAGRAM
NO.3-1 1442008B
2C

GXC-46D

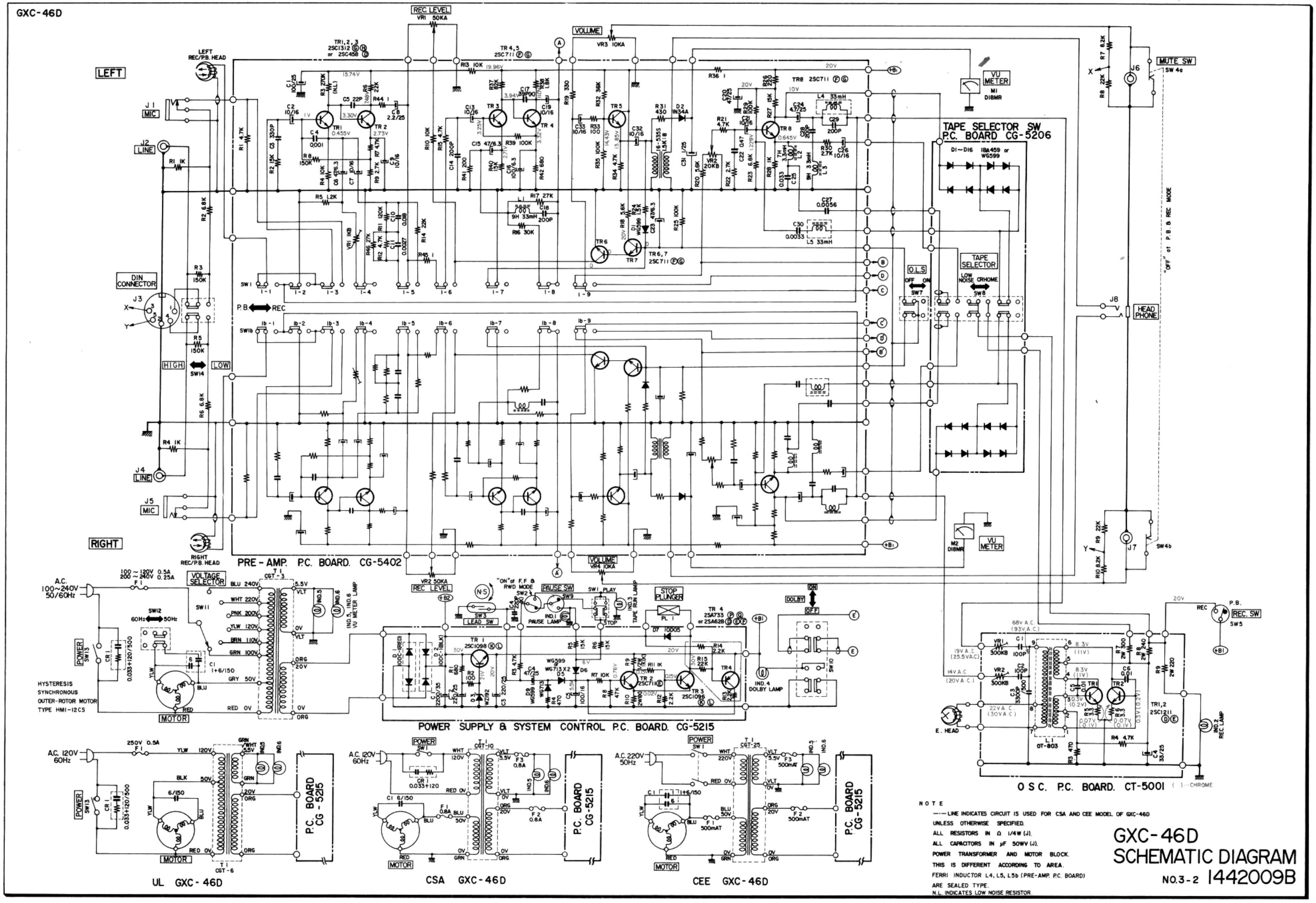

NOTE

—·— LINE INDICATES CIRCUIT IS USED FOR CSA AND CEE MODEL OF GXC-46D

UNLESS OTHERWISE SPECIFIED.

ALL RESISTORS IN Ω 1/4W (J).

ALL CAPACITORS IN μF 50WV (J).

POWER TRANSFORMER AND MOTOR BLOCK.

THIS IS DIFFERENT ACCORDING TO AREA.

FERRI INDUCTOR L4, L5, L5b (PRE-AMP. P.C. BOARD)

ARE SEALED TYPE.

N.L. INDICATES LOW NOISE RESISTOR.

GXC-46D SCHEMATIC DIAGRAM

NO.3-2 1442009B

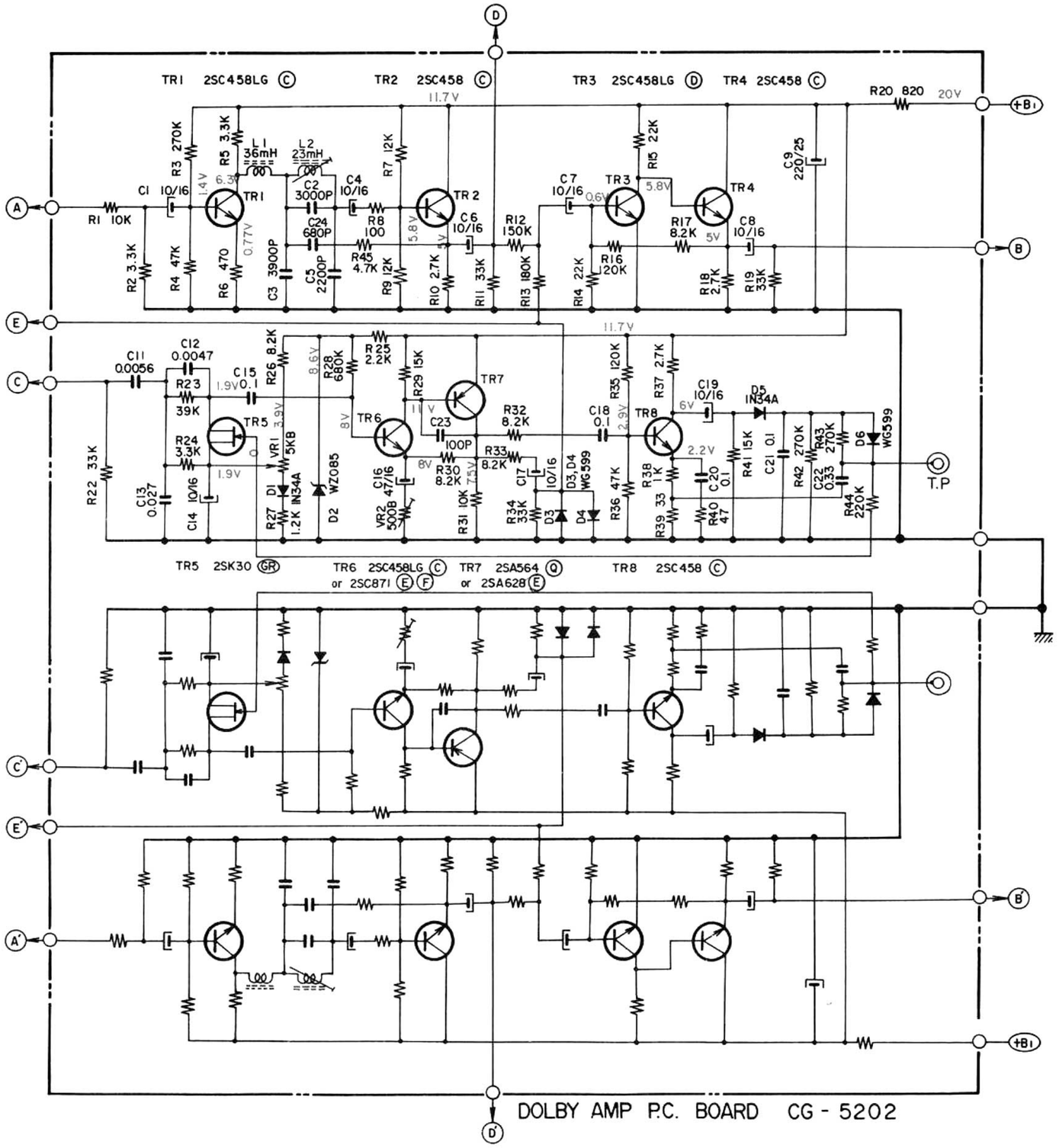

NOTE
UNLESS OTHERWISE SPECIFIED.
ALL RESISTORS IN Ω 1/4W (J).
ALL CAPACITORS IN μF 50WV(J).

GXC-46/D DOLBY SYSTEM SCHEMATIC DIAGRAM

NO.3-3 1442010B

2C

GXC-46/D

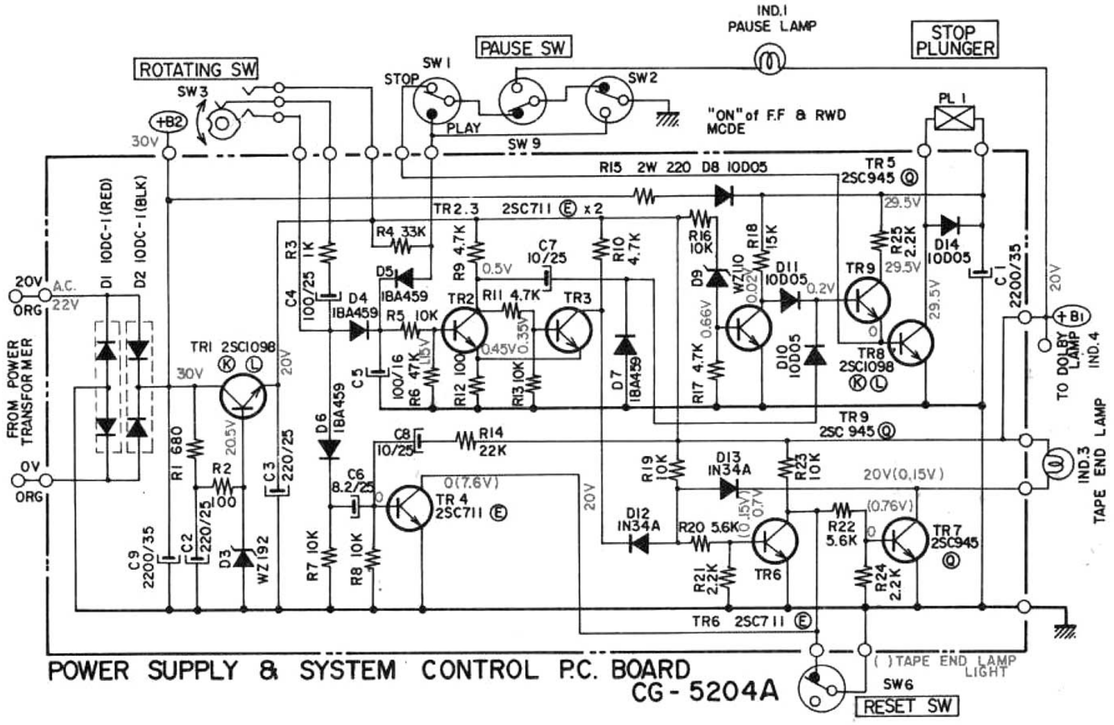

POWER SUPPLY & SYSTEM CONTROL P.C. BOARD
CG-5204A

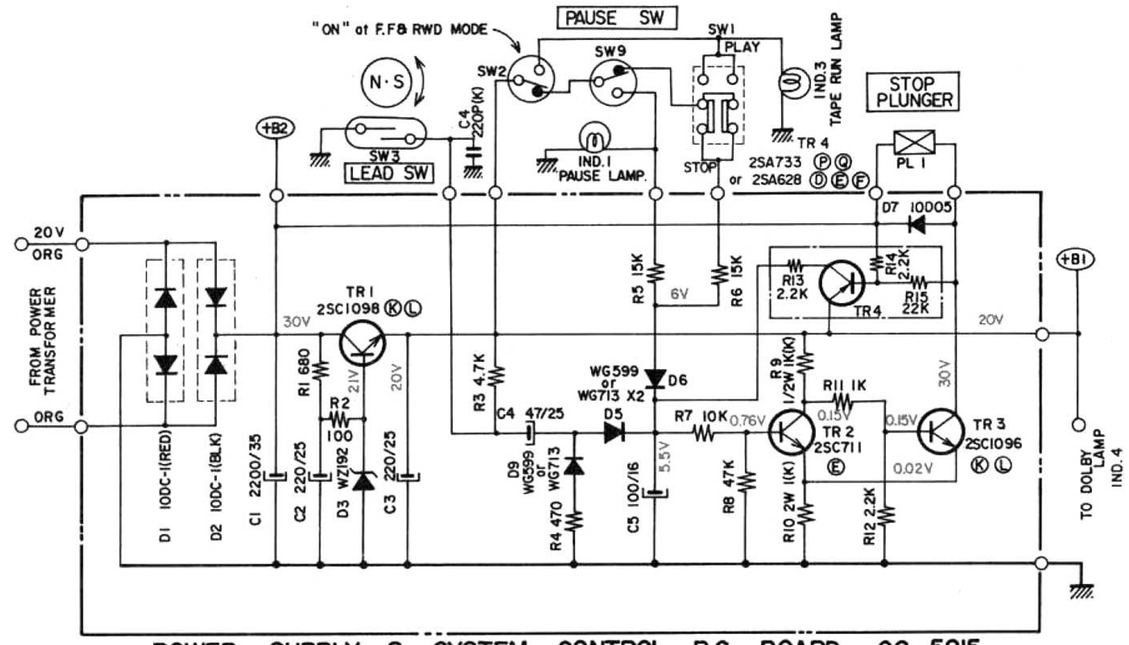

POWER SUPPLY & SYSTEM CONTROL P.C. BOARD. CG-5215

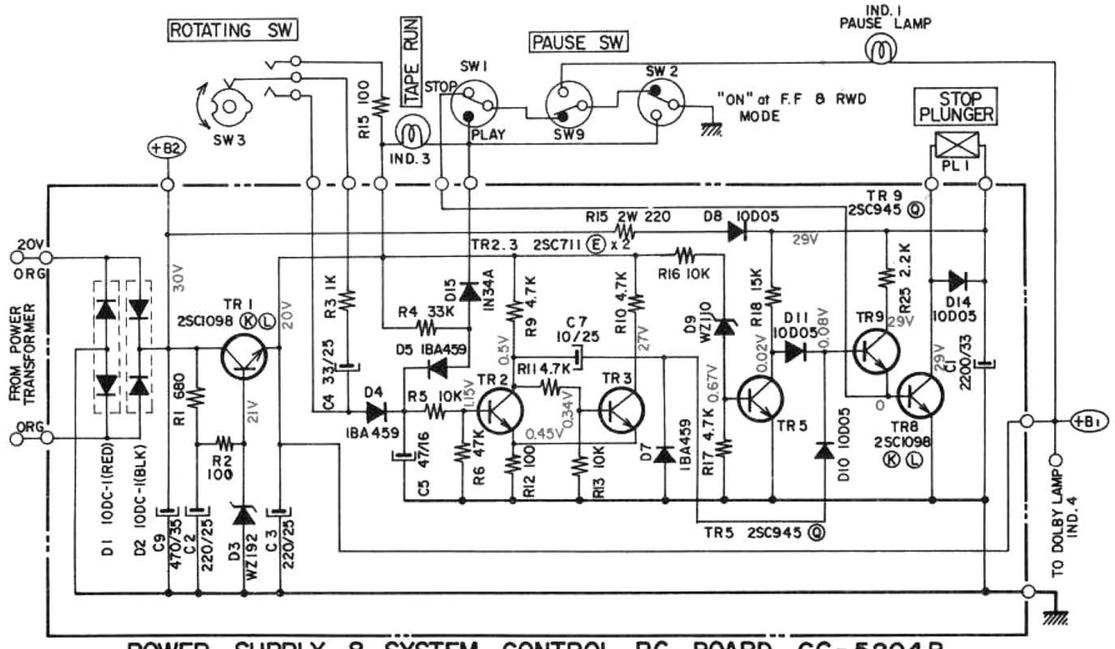

POWER SUPPLY & SYSTEM CONTROL P.C. BOARD. CG-5204B

POWER SUPPLY & SYSTEM CONTROL SCHEMATIC DIAGRAM AND P.C. BOARD ARE DIFFERENTIATED BY SERIAL NUMBER. THE FOLLOWING CHART IS PROVIDED FOR REFERENCE.

SERIAL NUMBER	P.C. BOARD
70820-0001 to 71020-4000	CG-5204A
71017-0001 to 71017-3000	CG-5204B
FROM 71122-0001	CG-5215

NOTE
UNLESS OTHRWISE SPECIFIED
ALL RESISTORS IN Ω 1/4W (J).
ALL CAPACITORS IN μF 50WV (J).
—·—LINE INDICATES CIRCUIT IS USED FOR CSA AND CEE MODEL OF GXC-46D

GXC-46/D
POWER SUPPLY & SYS. CON. SCHEMATIC DIAGRAM

NO. 3-1B, 3-2B 1442011B

2C