QUICK-SERV.

SERVICE MANUAL

PARTS LIST

PRIDE IN QUALITY

AKAI STEREO TAPE DECK

MODEL **GX-285D**

STEREO TAPE DECK

MODEL GX-285D

SECTION 1 SERVICE MANUAL 3
SECTION 2 PARTS LIST 35
SECTION 3 SCHEMATIC DIAGRAM 64

SECTION 1

SERVICE MANUAL

TABLE OF CONTENTS

I. SPECIFICATIONS 4

II. MEASURING METHOD 6
- 1. TAPE SPEED DEVIATION 6
- 2. WOW AND FLUTTER 6
- 3. FREQUENCY RESPONSE 6
- 4. SIGNAL TO NOISE RATIO 6
- 5. TOTAL HARMONIC DISTORTION 7
- 6. CROSS TALK 7
- 7. ERSE RATIO 7

III. DISMANTLING OF UNIT 8

IV. MECHANISM ADJUSTMENTS 10
- 1. TAPE SPEED ADJUSTMENT (Servo-Control Amp. Adjustment) 10
- 2. DIRECT FUNCTION TIME CONSTANT ADJUSTMENT 10
- 3. BRAKE TENSION ADJUSTMENT 11
- 4. SUPPLY VOLTAGE TO BOTH TORQUE MOTORS AS WELL AS TENSION AT VARIOUS OPERATING MODES 12
- 5. REEL TABLE HEIGHT ADJUSTMENT 12
- 6. PINCH WHEEL PRESSURE MEASUREMENT AND ADJUSTMENT 13

V. HEAD ADJUSTMENTS 14
- 1. HEAD HEIGHT ADJUSTMENT 14
- 2. HEAD AZIMUTH ALIGNMENT ADJUSTMENT 15

VI. AMPLIFILER ADJUSTMENTS 16
- 1. PLAYBACK LEVEL ADJUSTMENT 16
- 2. BLAS TRAP COIL ADJUSTMENT 16
- 3. RECORDING LEVEL ADJUSTMENT 17
- 4. RECORDING BIAS FREQUENCY MEASURING METHOD AND FREQUENCY ADJUSTMENT 17
- 5. RECORDING BIAS VOLTAGE ADJUSTMENT (Frequency Response Adjustment) 18

VII. DOLBY AMP. ADJUSTMENTS 19
- 1. DOLBY AMPLIFIER ADJUSTMENT AND CONFIRMATIONS 19
- 2. RECORDING DOLBY AMP. ADJUSTMENT 20
- 3. PLAYBACK DOLBY AMP. ADJUSTMENT 21

VIII. TRANSPORT MECHANISM 22
- 1. FROM STOP TO FORWARD PLAYBACK 24
- 2. FROM FORWARD TO REVERSE PLAYBACK 24
- 3. FROM REVERSE TO FORWARD PLAYBACK 24
- 4. FAST FORWARD 24
- 5. REWIND 24

IX. SERVO MOTOR OPERATING PRINCIPLES 25

X. OPERATION OF REC. DOLBY N.R. CIRCUIT 30
- 1. RECORDING DOLBY N.R. CIRCUIT 30
- 2. PLAYBACK DOLBY N.R. CIRCUIT 31

XI. COMPOSITE VIEWS OF COMPONENTS 32
- 1. OUTPUT AMP. P.C. BOARD KD-A5215 32
- 2. VOLUME P.C. BOARD E KD-A5218 32
- 3. VOLUME P.C. BOARD D KD-A5206 32
- 4. SWITCH P.C. BOARD KD-A5217 33
- 5. CONDENSER P.C. BOARD KD-A2013 33
- 6. PRE-AMP. CHASSIS P.C. BOARD KD-A5216 34

I. SPECIFICATIONS

An asterisk next to a figure indicates the minimum guaranteed performance.

TRACK SYSTEM	4 track/2 channel stereo/monaural system
REEL CAPACITY	Up to 7" reel
TAPE SPEED	7-1/2 ips (19 cm/sec.) ±0.5% (*+1% −0.5%) 3-3/4 ips (9.5 cm/sec.) ±0.5% (*±1%)
WOW AND FLUTTER	Less than 0.08% (*0.12%) at 7-1/2 ips Less than 0.12% (*0.18%) at 3-3/4 ips
FREQUENCY RESPONSE	
Low Noise Tape	20 to 25,000 Hz (*30 to 20,000 Hz) ±3 dB at 7-1/2 ips 30 to 20,000 Hz (*30 to 15,000 Hz) ±3 dB at 3-3/4 ips
Regular Tape	30 to 23,000 Hz (*30 to 20,000 Hz) ±3 dB at 7-1/2 ips 30 to 19,000 Hz (*30 to 15,000 Hz) ±3 dB at 3-3/4 ips
SIGNAL TO NOISE RATIO	63 dB with Dolby process *Better than 48 dB at 7-1/2 ips *Better than 46 dB at 3-3/4 ips
DISTORTION FACTOR	
AKAI SRT Tape	0.8% at 1,000 Hz "O" VU recording
Low Noise Tape	*Less than 3% at 7-1/2 ips 1,000 Hz "O" VU recording *Less than 4.5% at 3-3/4 ips 1,000 Hz "O" VU recording
Regular Tape	*Less than 2% at 7-1/2 ips 1,000 Hz "O" VU recording *Less than 3% at 3-3/4 ips 1,000 Hz "O" VU recording
CROSS TALK	Better than 70 dB (*55 dB) monaural Better than 50 dB (*43 dB) stereo
ERASE RATIO	Better than 70 dB
BIAS FREQUENCY	100 to 110 kHz
BIAS LEAK	Less than −25 VU monaural Less than −45 VU stereo
HIGH FREQUENCY DEVIATION	
Between channels	With ±2 dB, using a 8,000 Hz 3-3/4 ips recorded tape at 7-1/2 ips
Between FWD/REV	Within ±3 dB, using a 8,000 Hz 3-3/4 ips recorded tape at 7-1/2 ips
INPUTS	
Mic Input	0.8 mV Impedance: 10 kΩ
Line Input	150 mV Impedance: 150 kΩ
Din Input	2 mV(Low) and 50 mV(High) Impedance: 68Ω
OUTPUTS	
Line Output	0.775V (0 ±1.5 dB) Impedance: 20 kΩ
Din Output	0.4V
RECORDING CAPACITY	60 min. stereo recording, using a 1,200 ft tape at 7-1/2 ips
FAST FORWARD AND RWD TIME	64/80 sec., using a 1,200 ft tape at 60/50 Hz
MOTORS	
Capstan Motor	2-speed servo control outer rotor motor Type: SCM2-24 Revolutions: 520 r.p.m. at 7-1/2 ips 260 r.p.m. at 3-3/4 ips
Reel Motor	Two 6-pole eddy current outer rotor motors Type: 24XO-MR Revolutions: 930 r.p.m. at 50 Hz 1,120 r.p.m. at 60 Hz
HEADS	
Erase Head	Type: E4-250 Gap: 0.6 mm Impedance: 195Ω ±10% at 100 kHz D.C. Resistance: 3.5Ω
Recording Head	Type: R4-200 Gap: 4μ ±15% Impedance: 1,870Ω at 100 kHz D.C. Resistance: 8Ω
Playback Head	Type: P4-200 Gap: 1.75μ ±15% Impedance: 3 ±1 kΩ at 1 kHz D.C. Resistance: 500Ω

TRANSISTORS	2SA564(Q) . . . . . 8 2SC458LG(C) (D) . . . . 28 2 SC458(C) . . . . . 2 2SC711(D) (E) . . . . . 11 2SC945(Q)(R)(S) 13	2SC968(3) (4) . . . . . 6 2SC1014(D) (E) . . . . . 1 2SD234(Y) 2 2SK30GR 4
DIODES	1N34A . . . . 20 10D1 . . . . 13 10D4 . . . . 3 RD9A 1	10DC-1(black) . . . . 1 10DC-1(red) . . . . 1 1BA459 . . . . 12 WZ-085 . . . 4
THERMISTER	41D26 1	
POWER SUPPLY	100 to 240V A.C. 50/60 Hz	
POWER CONSUMPTION	90W	
INSULATION RESISTANCE	More than 50 MΩ	
INSULATION DURABILITY	500V D.C. for more than 1 min. duration	
DIMENSIONS	435(W) x 460(H) x 260(D) mm (17.1" x 18.1" x 10.2")	
WEIGHT	22 kg (48.4 lbs.)	

NOTE: Specifications subject to change without notice.

II. MEASURING METHOD

1. TAPE SPEED DEVIATION

Fig. 1

As shown in Fig. 1, connect a Frequency Counter to the Line Output of Model GX-285D. Playback a 1,000 Hz pre-recorded test tape. Take a Frequency Counter reading at the beginning, middle, and end of tape winding during playback. The maximum value of these respective readings will represent tape speed deviation.

2. WOW AND FLUTTER

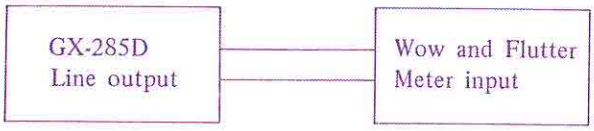

Fig. 2

Method A

As shown in Fig. 2, connect the Line Output of Model GX-285D to the Input of a Wow and Flutter Meter. Playback a 3,000 Hz pre-recorded test tape and take a Wow and Flutter Meter reading at the beginning, middle, and end of tape winding. The maximum value of these respective readings will represent the Wow and Flutter.

Method B

Supply a 3,000 Hz sine wave signal from an Audio Frequency Oscillator and make a recording on a blank tape at the beginning, middle, and end of tape winding. Rewind and playback the resultant signal. Measure Wow and Flutter with a Wow and Flutter Meter. (The Wow and Flutter value of Method B will be close to twice that of Method A.)

3. FREQUENCY RESPONSE

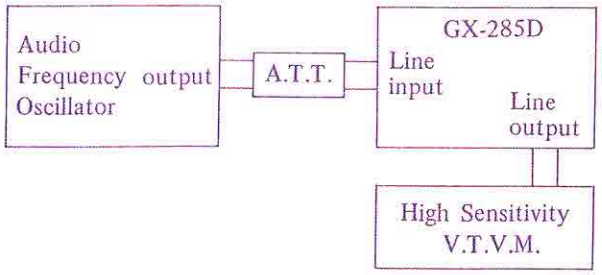

Fig. 3

For measuring Frequency Response, connect instruments as shown in Fig. 3 and proceed as follows:

1) Supply a 1,000 Hz sine wave signal to the Line Input of Model GX-285D from an Audio Frequency Oscillator through an Attenuator.
2) Set recorder to recording mode and turn recording level control volume and line output level control volume to maximum. Adjust attenuator to obtain a +4 dB V.T.V.M. reading.
3) Under conditions described in 2) above, readjust attenuator so that the Line Output is -16 dB, and record 30 to 24,000 Hz spot frequencies.
4) Rewind tape and playback from the beginning. Take V.T.V.M. spot frequency readings and plot values on a graph.

NOTE: When measuring Frequency Response, new tape should be used.

4. SIGNAL TO NOISE RATIO

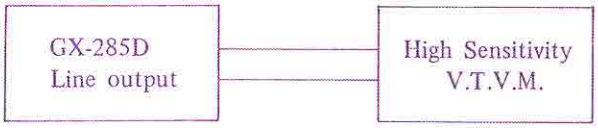

Fig. 4

As shown in Fig. 4, connect a High Sensitivity V.T.V.M. to the Line output of Model GX-285D. Playback a 250 Hz "0" VU pre-recorded test tape and measure the output. Then remove the tape and measure the noise level under the same condition. Convert each of the measured values into decibels.

5. TOTAL HARMONIC DISTORTION

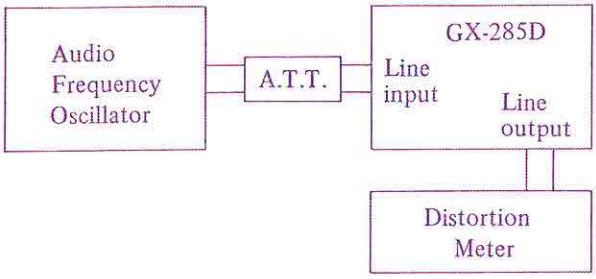

Fig. 5

Connect the measuring instruments as shown in Fig. 5 and record a 1,000 Hz sine wave signal at "0" VU. Playback the resultant signal and measure the overall distortion factor. Measure the noise level of the tape recorder without the tape. Connect the Audio Frequency Oscillator directly to the distortion meter for measurement of the distortion factor of the oscillator. The required distortion factor can be obtained from the results of the above measurement by the following formula:

$$d_0 = d - d_1 - d_2$$

where, d_0 = Required distortion factor
d = Overall distortion factor
d_1 = Noise level
d_2 = Distortion factor of the oscillator

NOTE: When measuring the distortion factor, new tape should be used.

6. CROSS TALK (Cross talk between the tracks)

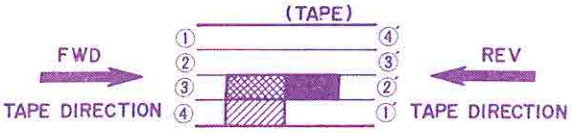

Fig. 6

As shown in Fig. 6, first record a 1,000 Hz sine wave signal on Track No. 3 at +3 VU level. Next, record under a non-input condition. Then, playback the tape on Tracks No. 3 and 1 (reversed condition of tape) through the B.P.F. (band pass filter sensitivity... 1:1) and obtain a ratio between the two from the following formula:

$$C = 20 \log \frac{E_0}{E_2 - E_1} \text{ (dB)}$$

where, C = Desired cross talk ratio (dB)
E_0 = 1,000 Hz signal output level
E_2 = 1,000 Hz cross talk level
E_1 = Non-input signal recorded level

Fig. 7

7. ERASE RATIO

As shown in Fig. 4, connect a High Sensitivity V.T.V.M. to the Line Output of Model GX-285D. Playback a virgin tape and take a V.T.V.M. reading of the output level. Next, record a 1,000 Hz sine wave signal at +3 VU, then playback this recorded signal and take a V.T.V.M. reading of the output level. Next, using this pre-recorded tape, record under a non-input condition and take a reading of the noise output level of the erased signal and obtain a ratio between the two from the following formula:

$$E_r = 20 \log \frac{E_0}{E_2 - E_1} \text{ (dB)}$$

where, E_r = Desired erase ratio (dB)
E_0 = 1,000 Hz signal output level
E_2 = Non-input signal recorded level
E_1 = Virgin tape noise output level

III. DISMANTLNG OF UNIT

In case of trouble, etc. necessitating disassembly, please disassemble in the order shown in photographs. Reassemble in reverse order.

1

2

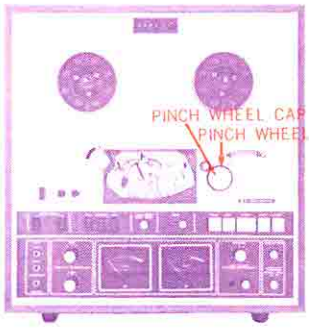

3

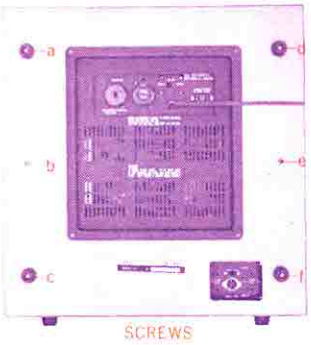

4

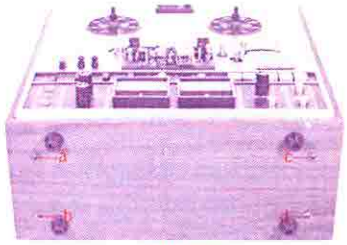

5

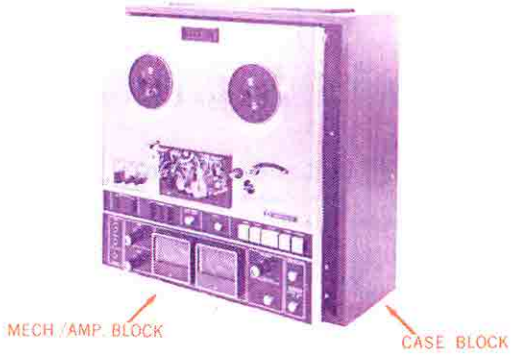

6

7

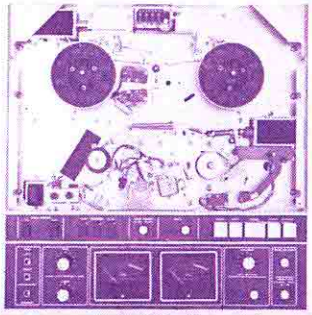

MECH AMP. ADJUSTMENT

8

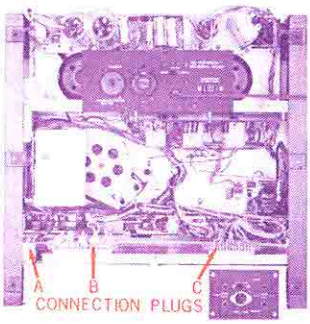

CONNECTION PLUGS

9

SCREWS

10

SCREWS

11

AMP. BLOCK

MECH. BLOCK

12

P.C. BOARD RETAINING PLATE

IV. MECHANISM ADJUSTMENTS

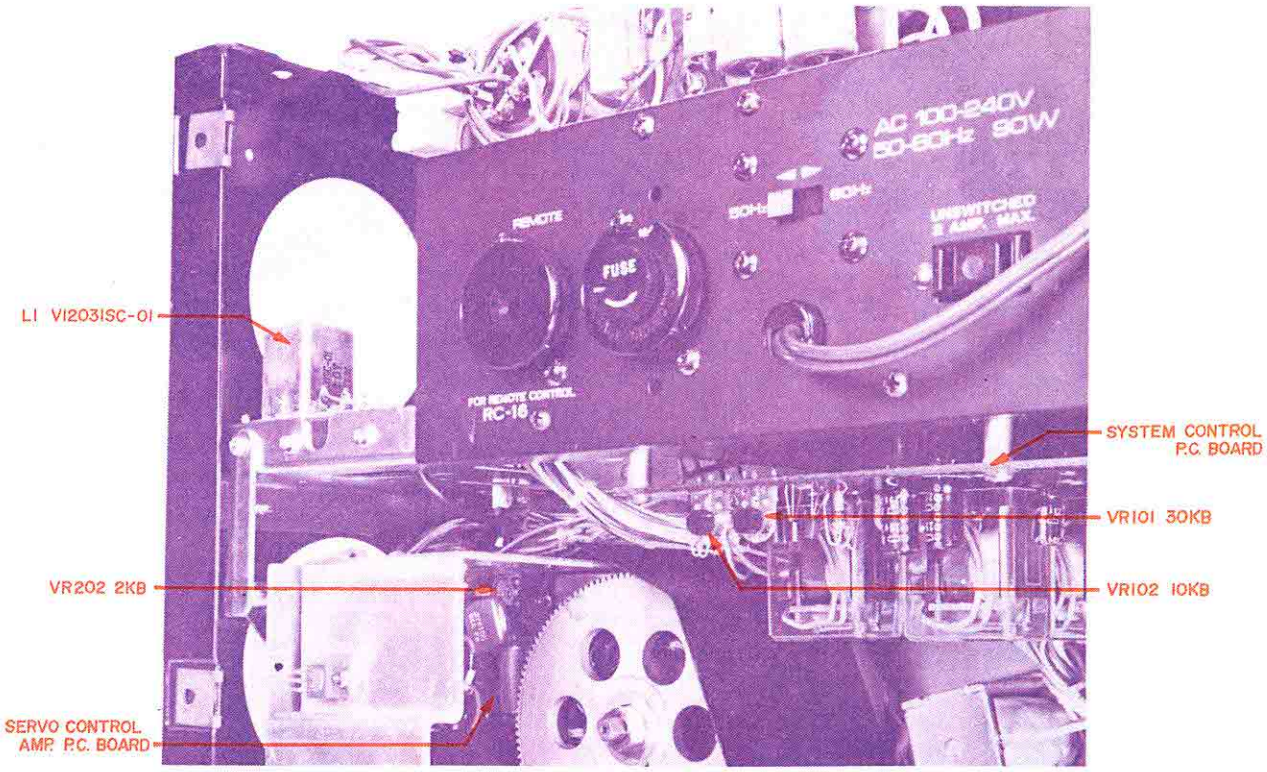

Fig. 8

1. TAPE SPEED ADJUSTMENT

(Servo-Control Amp Adjustment)

1) Connect a Frequency Counter to the line output terminals as shown in Fig. 1.
2) Turn Volume Controls to maximum and depress the 3-3/4 ips (9.5 cm/sec.) Tape Speed Selector. Playback a 1,000 Hz pre-recorded test tape.
3) Adjust the core of coil L1 (VI023SC-01) shown in Fig. 8 so that the Frequency Counter indication is 500 Hz ±1%.
4) After the 3-3/4 ips (9.5 cm/sec.) tape speed adjustment has been completed, depress the 7-1/2 ips (19 cm/sec.) Tape Speed Selector and adjust Servo-Control P.C. Board semi-fixed resistor VR202 (2 kB) shown in Fig. 8 so that the frequency counter indication is 1,000 Hz +1/-0.5%.

NOTE: When making tape speed adjustment, it is necessary to make the low speed (3-3/4 ips) adjustment first.

2. DIRECT FUNCTION TIME CONSTANT ADJUSTMENT

1) FWD ↔ REV Time Constant
Adjust System Control P.C. Board semi-fixed resistor VR101 (30 kB) shown in Fig. 8 so that when the machine is switched from FWD to REV mode or from REV to FWD mode, the pinch wheel separates from the capstan in about 3 seconds.
2) Adjust System Control P.C. Board semi-fixed resistor VR102 (10 kB) shown in Fig. 8 so that when the machine is switched from F. FWD or RWD to FWD or REV mode, the time constant is about 1.5 seconds.

NOTE: When making adjustments outlined in 2 (1) and 2 (2) above, when the machine is switched from the various modes to FWD or REV, confirm that correct capstan motor (servo motor) revolutions are reached by the time the pinch wheel contacts the capstan.

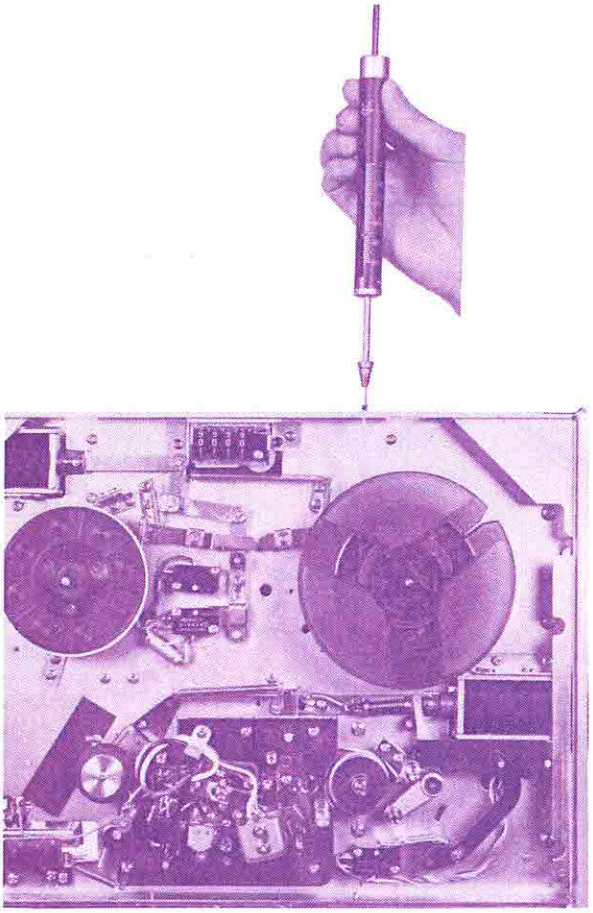

Fig. 9

3. BRAKE TENSION ADJUSTMENT

1) Use a 60 mm diameter tape wound on a 5" reel and measure the brake tension as shown in Fig. 9. Ideal tape tension is 350 grams.

2) Brake tension adjustment methods are as follows: (Refer to Fig. 10)
   a. Change position of suspended springs (d) and (d').
   b. Loosen screws (a) and (b) as well as (a') and (b') and adjust the vertical (up and down) position of spring suspension metals (c) and (c').
   c. Loosen screws (e) and (f) as well as (e') and (f') and adjust the horizontal (left/right) position of brake band suspension metal (g) and (g').

NOTE: In making brake tension adjustment, confirm that when the machine is set to each of the various modes (except stop mode) the brake band completely separates from the cloth tape on the brake drum. (Refer to Fig. 11)

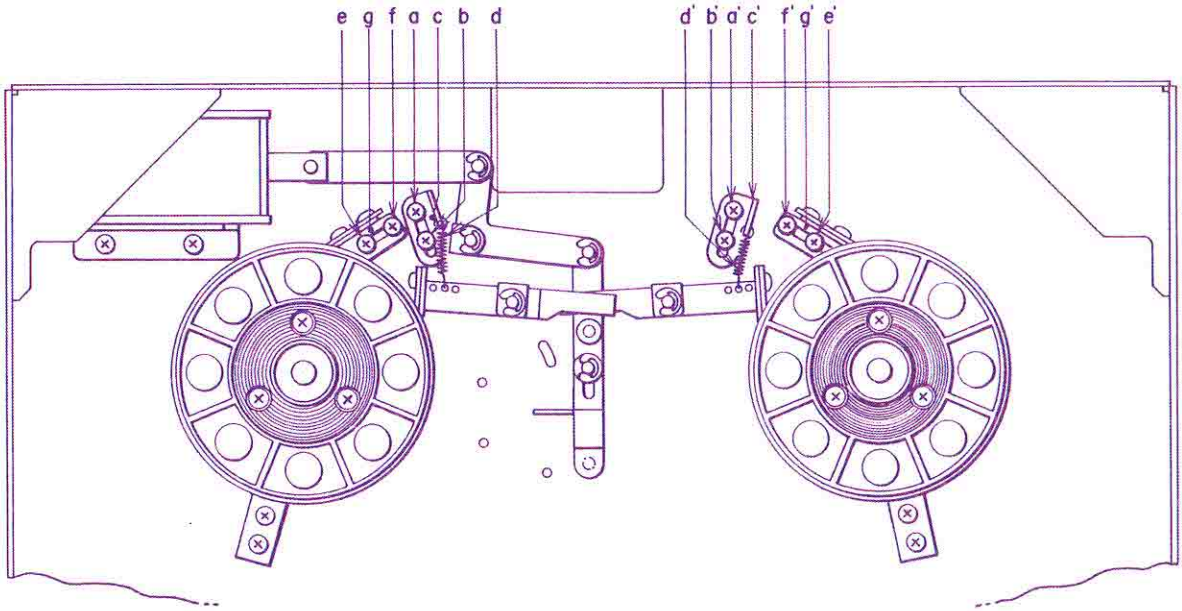

Fig. 10

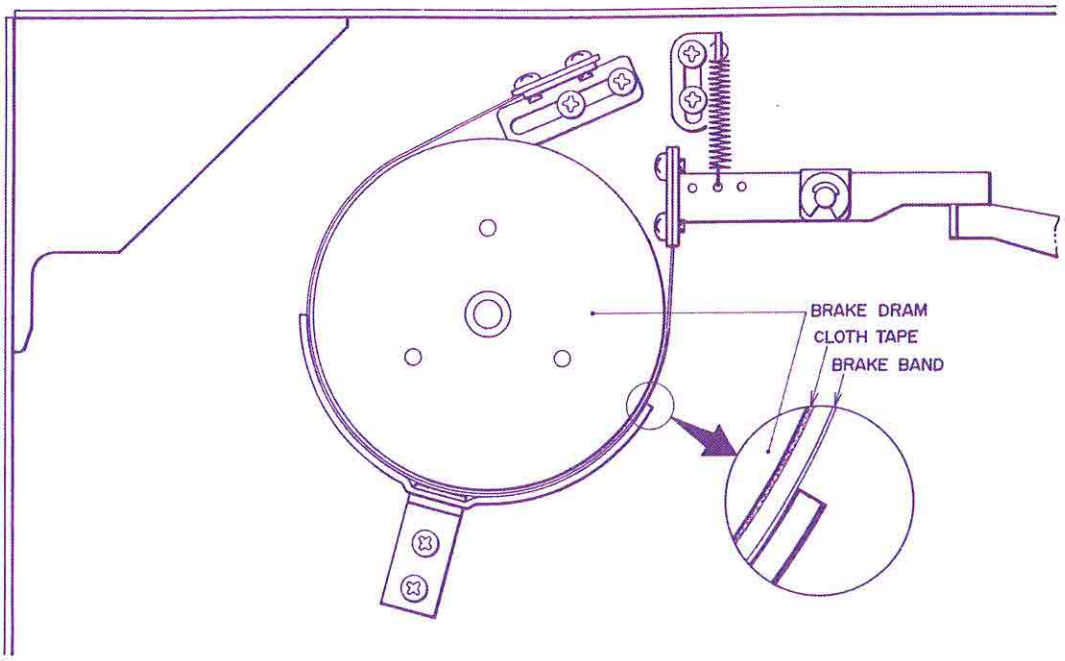

Fig. 11

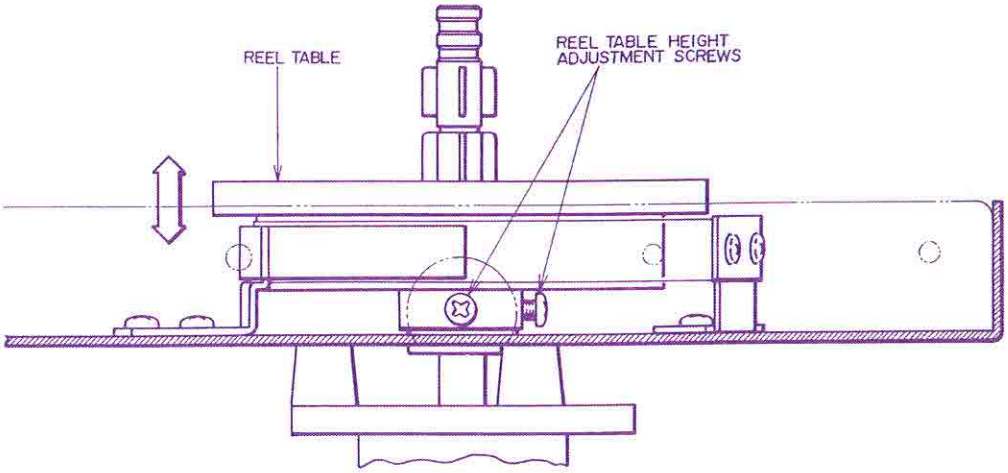

Fig. 12

4. SUPPLY VOLTAGE TO BOTH TORQUE MOTORS AS WELL AS TENSION AT VARIOUS OPERATING MODES

Modes \ Torque Motors	Left Side	Right Side
FWD	30V (35V) 55g	55V (60V) 180g
REV	55V (60V) 180g	30V (35V) 55g
F. FWD	100V (100V) 500g	11V (13V) 15g
RWD	11V (13V) 15g	100V (100V) 500g

Figures in parentheses indicate Voltage at 60 Hz.

Chart 1.

5. REEL TABLE HEIGHT ADJUSTMENT

Loosen the reel table height adjustment screws shown in Fig. 12 and adjust by moving the reel table as indicated by the arrow and positioning so that the tape winds in the center of the reel.

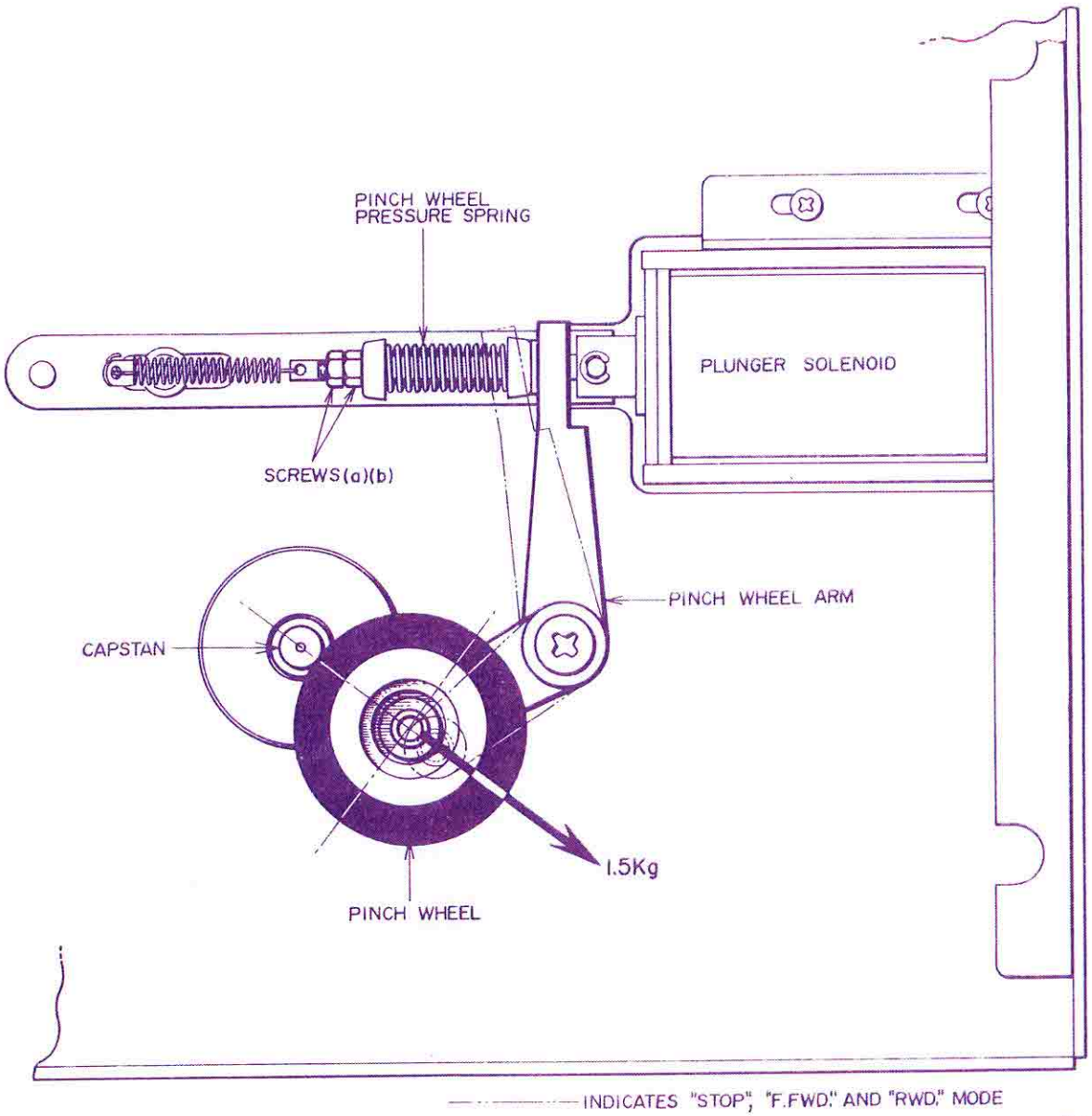

Fig. 13

6. PINCH WHEEL PRESSURE MEASUREMENT AND ADJUSTMENT

Use a tension gauge and measure the pinch wheel pressure as shown in Fig. 13. Read the value on the gauge as soon as the pinch wheel separates from the tape and tape travel stops. Ideal pinch wheel pressure is 1.5 kg. To regulate pinch wheel pressure, adjust nuts (a) and (b) shown in Fig. 13.

V. HEAD ADJUSTMENTS

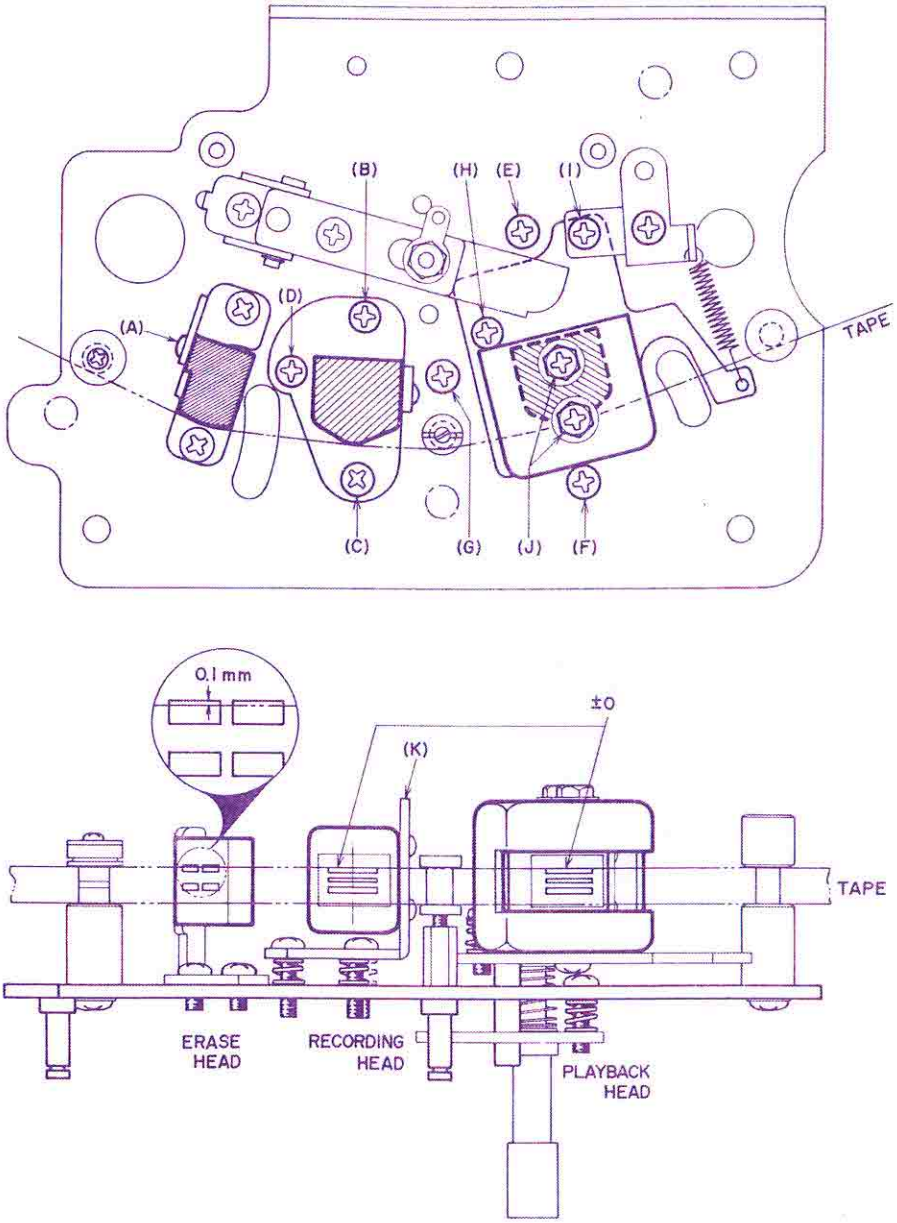

Fig. 14

1. HEAD HEIGHT ADJUSTMENT

1) ERASE HEAD
At P.B. mode, loosen screw (A) shown in Fig. 14 and adjust erase head height so that the upper edge of the tape is about 0.1 mm lower than the left channel head core of the erase head.

2) RECORDING HEAD
At P.B. mode, adjust recording head height by turning screws (B), (C), and (D) shown in Fig. 14 to left and right until the upper edge of the tape and the upper edge of the left channel head core of the recording head are the same height.

3) PLAYBACK HEAD
a. At forward P.B. mode, adjust playback head height by turning screw (I) shown in Fig. 14 to left and right until the upper edge of the tape and the upper edge of the left channel head core of the playback head are the same height.
b. At reverse P.B. mode, adjust playback head height by turning screw (H) shown in Fig. 14 to left and right until the lower edge of the tape and the lower edge of the right channel head core of the playback head are the same height.

2. HEAD AZIMUTH ALIGNMENT ADJUSTMENT

1) PLAYBACK HEAD

a. Connect a high sensitivity V.T.V.M. to the line output terminals.

b. Depress the 7-1/2 ips Tape Speed Switch and set the Dolby Switch to "OFF" position. Then turn Volume Controls to maximum and depress the STEREO Track Selector.

c. Playback an 8,000 Hz at 3-3/4 ips Ampex Alignment test tape.

d. At forward P.B. mode, turn azimuth alignment adjustment screw (G) to left and right until the output level of both channels is maximum.

e. After the adjustment outlined in (d) above has been completed, loosen screws (J) and move the head gap side of the playback head to left and right until there is no fluctuation (maximum allowable fluctuation +0.5/-0 dB) in output level (both channels) when tension is applied to the supply reel. Tighten screws (J) to maintain this condition.

f. At reverse P.B. mode, make the same adjustment as outlined in (e) above.

2) RECORDING HEAD

a. Connect an Audio Frequency Oscillator to the line input terminals and a high sensitivity V.T.V.M. to the line output terminals and load a blank tape.

b. Set the Monitor Switch to TAPE position and record a 16,000 Hz signal at -10 dB.

c. At recording mode, turn azimuth alignment screw (D) to left and right and adjust so that the line output level of both channels is maximum and does not fluctuate.

d. When the above adjustment has been completed, adjust the gap side of the recording head by bending recording head installation angle (K) shown in Fig. 14 to left and right until the line output level (both channels) does not fluctuate (maximum allowable fluctuation +0.5/-0 dB) when tension is applied to the supply reel.

3. For optimum adjustment, repeat Items 1) and 2) above 2 or 3 times. Blank test tape should be new tape.

VI. AMPLIFIER ADJUSTMENTS

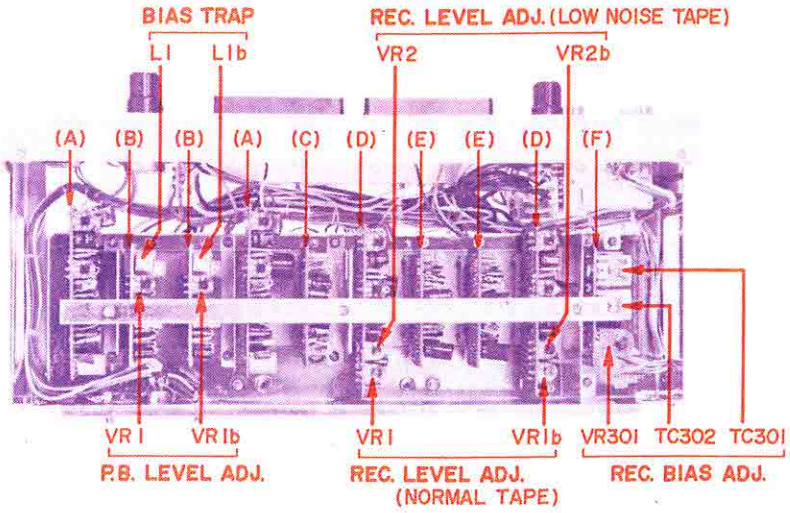

Fig. 15

(A): Playback Dolby Amp. P.C. Board KD-A5213
(B): Playback Amp. P.C. Board KD-A5208
(C): Output Amp. P.C. Board KD-A5215
(D): Recording Dolby Amp. P.C. Board KD-A5214
(E): Recording Amp. P.C. Board KD-A5207
(F): Oscillator P.C. Board KD-A5029

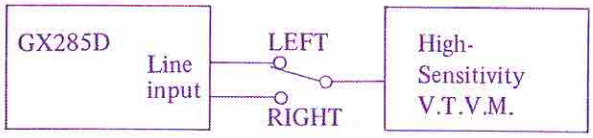

Fig. 16

1. PLAYBACK LEVEL ADJUSTMENT

1) Connect a high sensitivity V.T.V.M. to the line output terminals.
2) Depress the 7-1/2 ips Tape Speed Switch and set the Dolby Switch to OFF position. Then turn Volume Controls to maximum and depress the STEREO Track Selector.
3) Playback a 250 Hz "O" VU recorded test tape.
4) Adjust P.B. Amp. P.C. Board Playback level adjustment semi-fixed resistor VR1 50 kB (left channel) and VR1b 50 kB (right channel) shown in Fig. 15 so that the V.T.V.M. indication is 0 dB (0.775V).

2. BIAS TRAP COIL ADJUSTMENT

1) When the playback output level adjustment has completed, set tape deck to recording mode.
2) Adjust P.B. Amp. P.C. Board bias trap coils L1 10 mH (left channel) and L1b 10 mH (right channel) shown in Fig. 15 so that the V.T.V.M. indication is minimum (less than -50 dB).

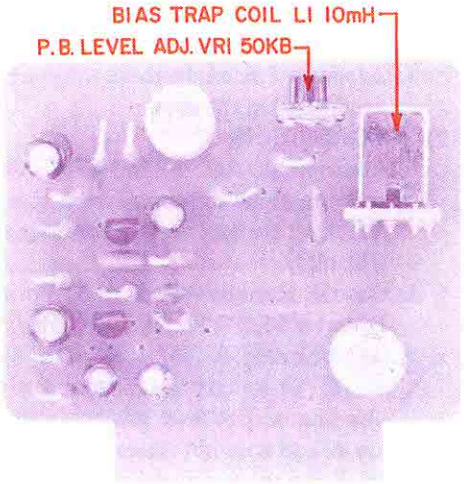

Fig. 17 P.B. AMP. P.C. BOARD (FACE SIDE)

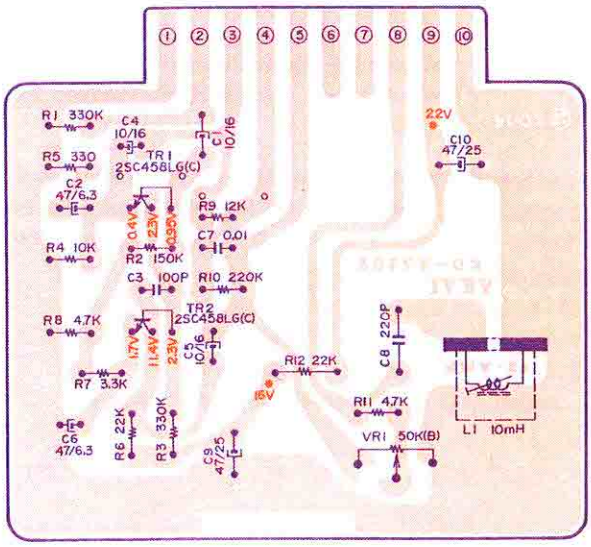

Fig. 18 P.B. AMP. P.C. BOARD KD-A5208 (REVERSE SIDE)

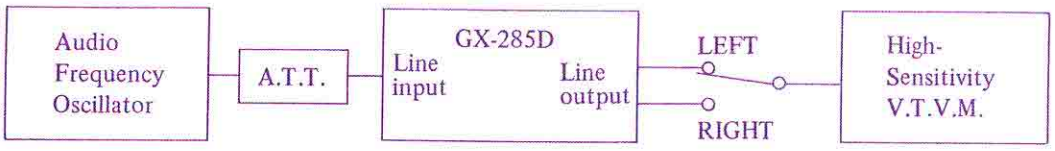

Fig. 19

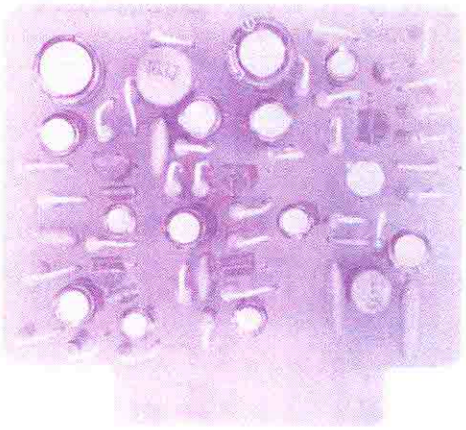

Fig. 20 REC. AMP. P.C. BOARD (FACE SIDE)

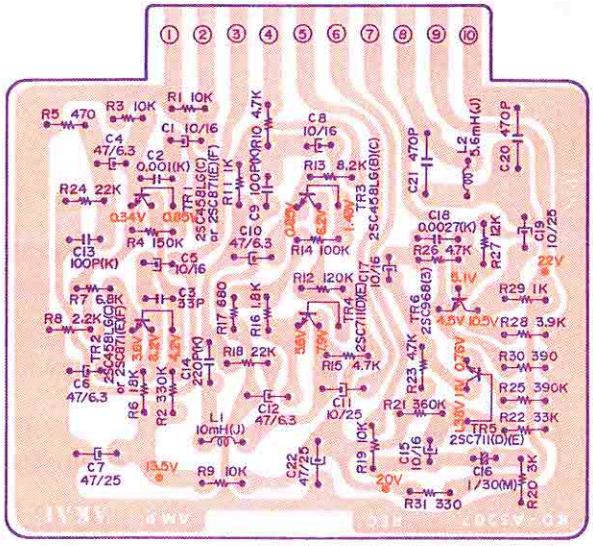

Fig. 21 REC. AMP. P.C. BOARD KD-A5207 (REVERSE SIDE)

3. RECORDING LEVEL ADJUSTMENT

1) Connect an Audio Frequency Oscillator to the line input terminals through an Attenuator and connect a high sensitivity V.T.V.M. to the line output terminals.
2) Depress the 7-1/2 ips Tape Speed Switch and set the Dolby Switch to OFF position.
3) Turn Volume Controls and Line Volumes to maximum.
4) Set Monitor Switch to SOURCE position and supply a 1,000 Hz signal from the Audio Frequency Oscillator. Adjust Attenuator to obtain a V.T.V.M. indication of 0 dB (0.775V).
5) Set Low Noise Tape Switch to "OFF" position and load a Scotch #150 blank tape. Set tape deck to recording mode and set Monitor Switch to TAPE position.
6) Adjust Rec. Dolby Amp. P.C. Board recording level adjustment semi-fixed resistors VR1 20 kB (left channel) and VR1b 20 kB (right channel) shown in Fig. 15 to obtain a high sensitivity V.T.V.M. indication of 0 dB (0.775V).
7) Set Low Noise Tape Switch to "ON" position and load a Scotch #203 blank tape.
8) Adjust Dolby Amp. P.C. Board recording level adjustment semi-fixed resistors VR2 20 kB (left channel) and VR2b 20 kB (right channel) shown in Fig. 15 to obtain a high sensitivity V.T.V.M. indication of 0 dB (0.775V).

4. RECORDING BIAS FREQUENCY MEASURING METHOD AND FREQUENCY ADJUSTMENT

MEASURING METHOD

METHOD 1

1) As shown in Fig. 22, install a 1 to 2Ω resistor in series with the recording head and connect both of these terminals (a) and (b) to the vertical input of the oscilloscope.
2) Supply a sine wave signal to the horizontal input of the oscilloscope from the audio frequency oscillator and set tape deck to recording mode.
3) Vary the oscillation frequency of the audio frequency oscillator until the oscilloscope waveform displays a circular or linear pattern.
4) If the audio oscillation frequency indication is within 100 to 110 kHz when a circular or linear pattern is displayed, the recording bias frequency is correct.

METHOD 2

1) Connect a frequency counter to both (a) and (b) terminals as shown in Fig. 22. Set tape deck to recording mode and take a frequency counter reading.
2) If the frequency counter indication at this time is within 100 to 110 kHz, the recording bias frequency is correct.

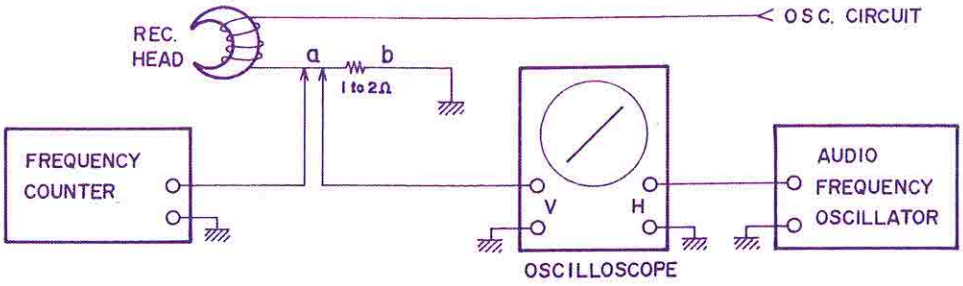

Fig. 22

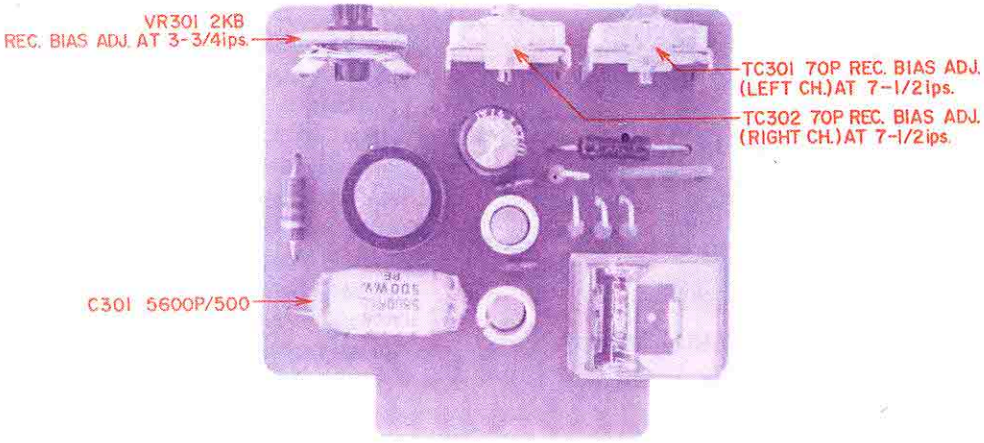

Fig. 23 OSC. P.C. BOARD (FACE SIDE)

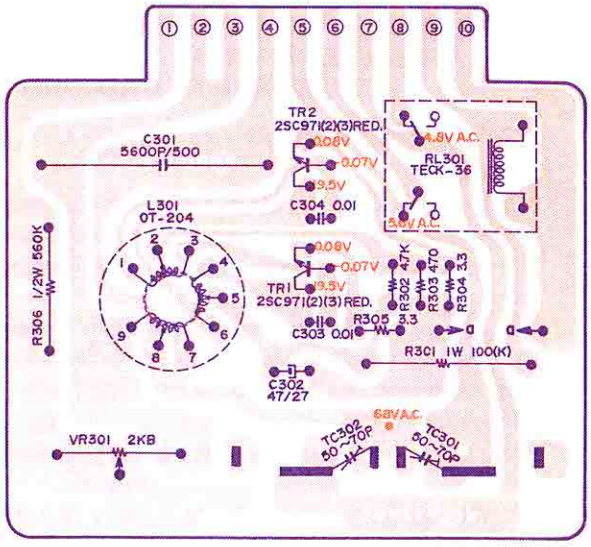

Fig. 24 OSC. P.C. BOARD KD-A5209
(REVERSE SIDE)

ADJUSTMENT

The recording bias frequency can be adjusted by changing the value of OSC. P.C. Board condenser C301 (5600P/500 WV).

5. RECODING BIAS VOLTAGE ADJUSTMENT (Frequency Response Adjustment)

1) Connect the various measuring instruments as outlined in "Recording Level Adjustment" procedure.
2) Following "Recording Level Adjustment" procedure through Item 5) and set the attenuator to -20 dB.
3) Under these conditions, adjust OSC. P.C. Board recording bias voltage adjustment trimmer condensers TC301 70P (left channel) and TC302 70P (right channel) shown in Fig. 15 to obtain an equally flat frequency response at 1,000 Hz and 10,000 Hz.
4) Depress the 3-3/4 ips (9.5 cm/sec.) Tape Speed Switch and make the same adjustment as outlined above. Adjust OSC. P.C. Board recording bias voltage adjustment semi-fixed resistor VR301 (2 kB) shown in Fig. 15 to obtain an equally flat frequency response at 1,000 Hz and 10,000 Hz.

NOTE: The frequency response will vary depending upon the tape being used. (As a general rule, Scotch #150 tape is used.)

VII. DOLBY AMP. ADJUSTMENTS

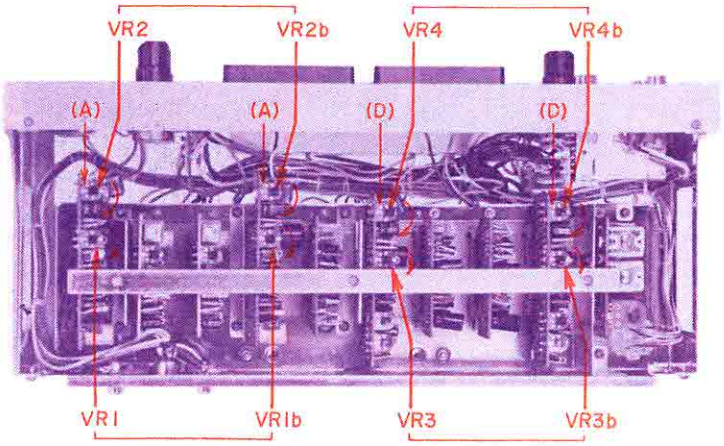

Fig. 25

(A): Playback Dolby Amp. P.C. Board KD-A5213
(D): Recording Dolby Amp. P.C. Board KD-A5214

1. DOLBY AMPLIFIER ADJUSTMENT PRECAUTIONS AND CONFIRMATIONS

1) Recording level is properly set.
2) Equally flat frequency response level is obtained at 1,000 Hz and 10,000 Hz. (Frequencies exceeding 10,000 Hz should also be as flat as possible.)
3) Bias leak is less than 50 dB.
4) Because it is possible for the Dolby recording adjustment to be off even after the recording level adjustment semi-fixed resistor adjustment has been made, check this point and if necessary, readjust.
5) The frequency response when the Dolby Switch is at ON position should be as close as possible to the frequency response when the Dolby Switch is at OFF position. For this reason, if it is necessary, Dolby playback circuit FET gate bias adjustment semi-fixed resistor VR1 (5 kB) can be adjusted.

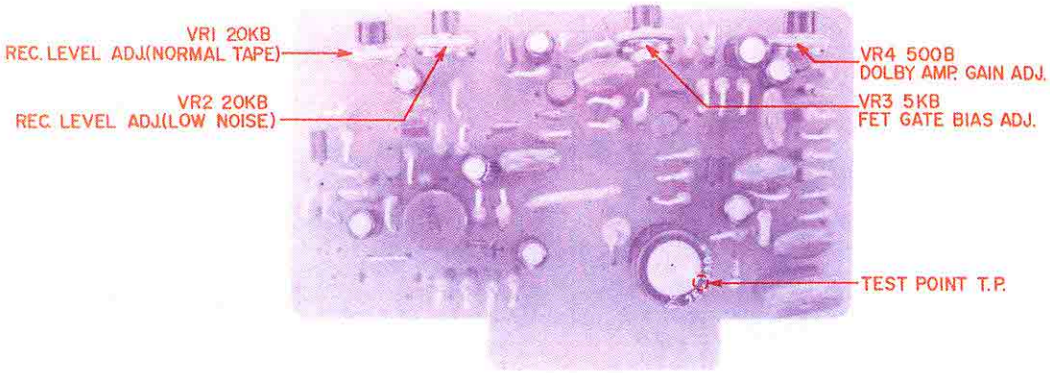

Fig. 26 REC. DOLBY AMP. P.C. BOARD (FACE SIDE)

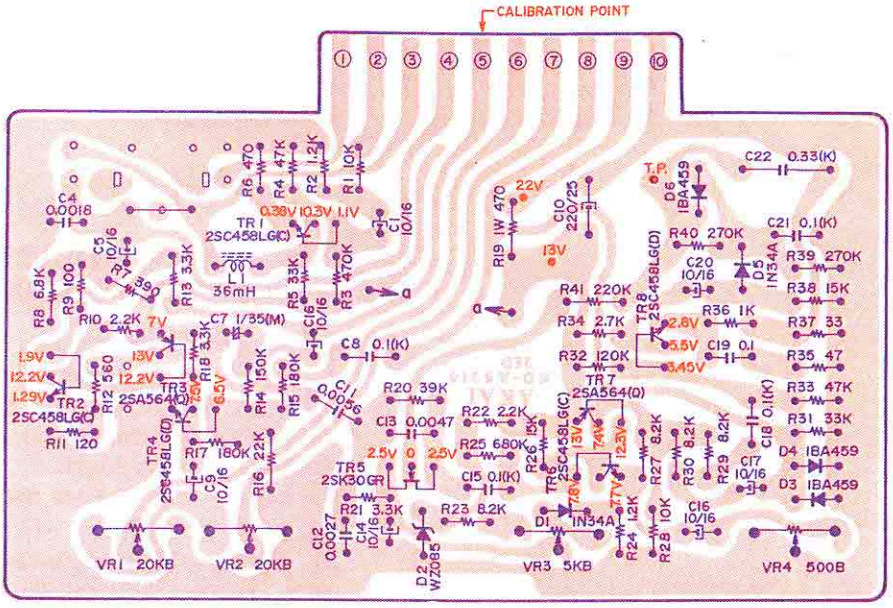

Fig. 27 REC. DOLBY AMP. P.C. BOARD KD-A5214 (REVERSE SIDE)

2. RECORDING DOLBY AMP. ADJUSTMENT

1) As shown in Fig. 25, turn Rec. Dolby Amp. P.C. Board semi-fixed resistors VR3 (5 kB) and VR4 (500 B) as far as they will go in the direction of the arrow.
2) Set Dolby Switch (SW-3) to "OFF" position.
3) Ground Rec. Dolby Amp. P.C. Board Test Point T.P. (See Fig. 26)
4) Using a Frequency Counter, supply an exact 5 kHz signal which has been precisely determined by the oscillation frequency of the audio frequency oscillator to the line input.
5) Set tape deck Monitor Switch (SW-2) to SOURCE.
6) Adjust input level to obtain a calibration point (terminal(5)) shown in Fig. 27 level of -30.5 dB.
7) At this time, take a reading of the level at terminal (6) or terminal (7).
8) Set Dolby Switch (SW-3) to "ON" position and adjust Rec. Dolby Amp. P.C. Board Dolby Amp. gain adjustment semi-fixed resistor VR4 (500 B) so that the level of terminal (6) or terminal (7) is 10 dB above the level when the Dolby Switch (SW-3) is at "OFF" position. (See Fig. 25)
9) Disconnect ground from Recording Dolby Amp. P.C. Board Test Point T.P.
10) At this time, reduce the level of terminal (6) or terminal (7) by 2 dB by adjusting Rec. Dolby Amp. P.C. Board FET gate bias adjustment semi-fixed resistor VR3 (5 kB) (See Fig. 25).

SYSTEM CONTROL SCHEMATIC

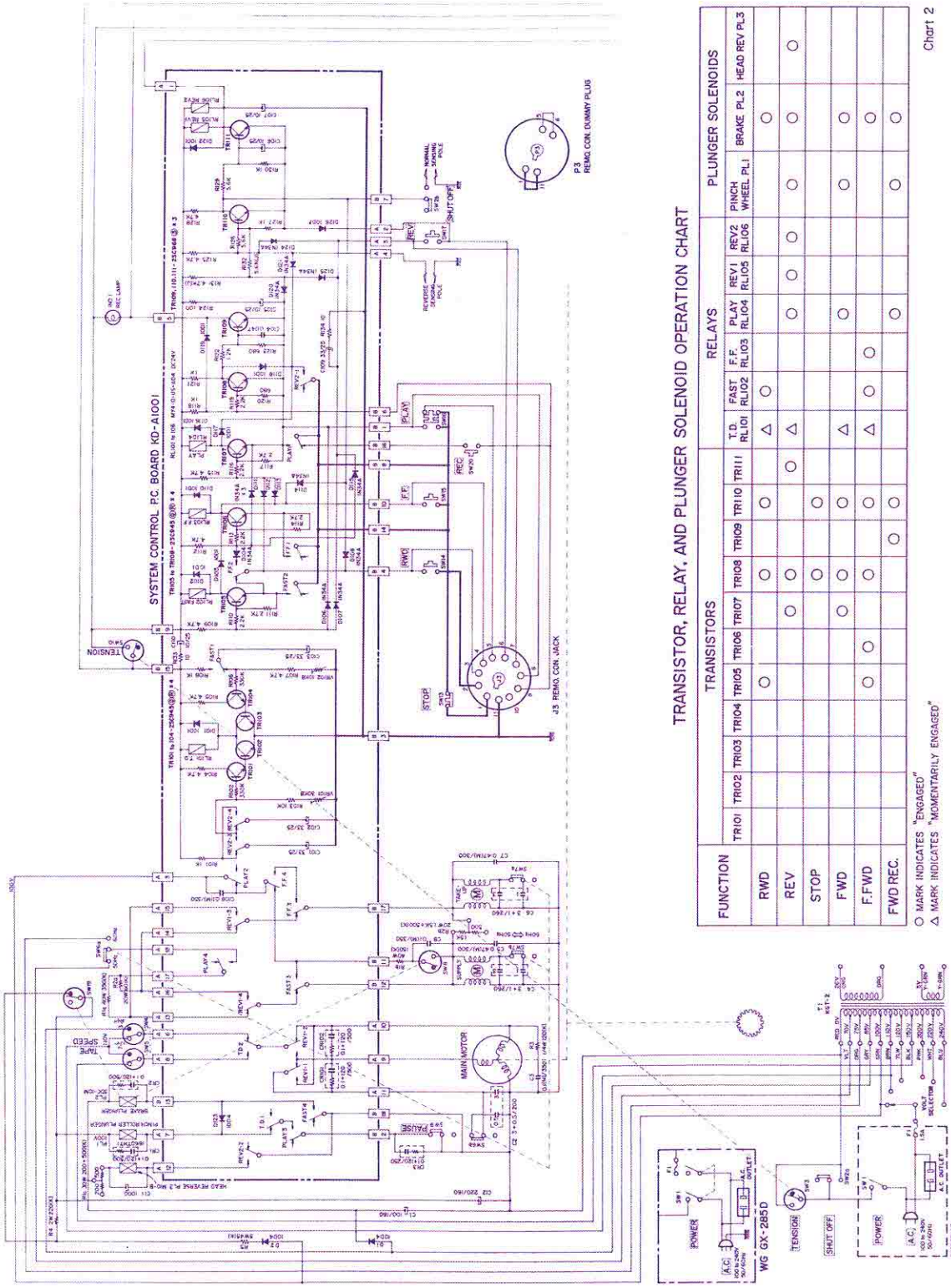

TRANSISTOR, RELAY, AND PLUNGER SOLENOID OPERATION CHART

FUNCTION	TRANSISTORS											RELAYS					PLUNGER SOLENOIDS		
	TR101	TR102	TR103	TR104	TR105	TR106	TR107	TR108	TR109	TR110	TR111	T.D. RL101	FAST RL102	F.F. RL103	PLAY RL104	REV1 RL105	REV2 RL106	PINCH WHEEL PL1	BRAKE PL2	HEAD REV PL3
RWD																				
REV					○				○	○		△	○							
STOP							○	○			○	△			○	○	○	○	○	○
FWD								○		○										
F.FWD							○	○	○	○		△			○			○	○	○
FWD REC.					○	○		○		○		△	○	○						
									○	○					○			○	○	○

○ MARK INDICATES "ENGAGED"
△ MARK INDICATES "MOMENTARILY ENGAGED"

Chart 2

SCHEMATIC–1

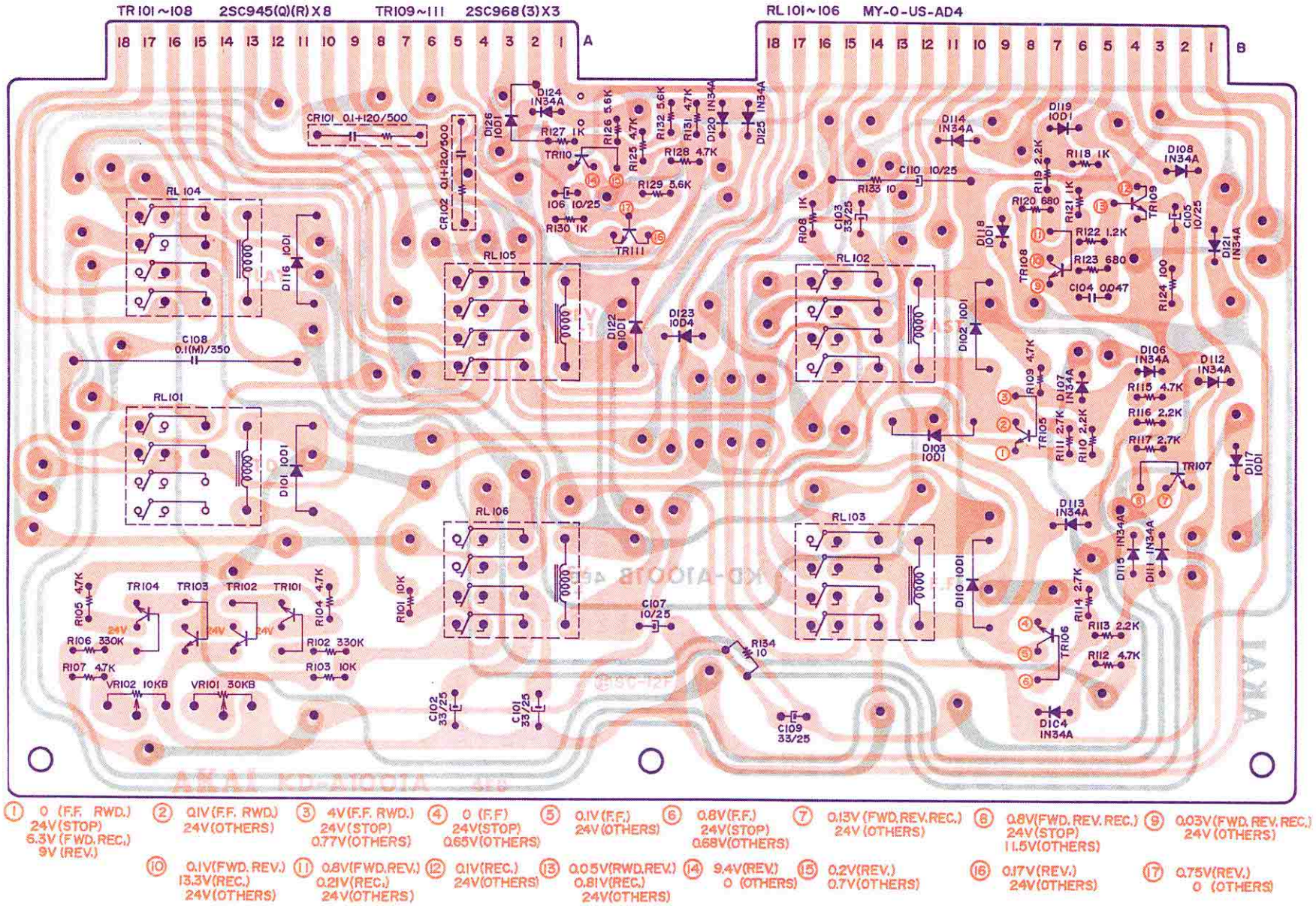

Fig. 30 SYSTEM CONTROL P.C. BOARD KD-A1001 (REVERSE SIDE)

1. FROM STOP TO FORWARD PLAYBACK

When the FWD Button is depressed, TR107 emitter is grounded, and TR107 passes RL104 and is turned on. TR107 is maintained at "on" by RL104 contact point Play-1.
The Pinch Roller Plunger and Brake Plunger current passes Play-3 and is turned on. The voltage passes Play-4 and is divided by means of R1a (350Ω) and R2a (60Ω). About 55V (60V 60 Hz) is supplied to the Take-up Motor and about 30V (35V 60 Hz) to the Supply Motor. At 7-1/2 ips, 110V is applied to the Main Motor and at 3-3/4 ips, 85V is applied to the Main Motor.
At Forward Playback, TR110 is turned on, and TR111 is turned off. C101 of T.D. Circuit passes R101 and is charged.

2. FROM FORWARD TO REVERSE PLAYBACK

When the Reverse Button is depressed or when the sensing tape passes the sensing pole, TR110 is turned off and TR111 is turned on. Consequently, RL105, RL106, and RL1 of Volume P.C. Board is turned on. When RL106 is momentarily turned on, C101 passes R103 and VR101 and discharge begins. C101 discharge current flows to the base of TR101 and TR102 and they are turned on. When this occurs, RL101 is turned on, and Brake Plunger as well as Pinch Roller Plunger is turned off. At this time, the capstan motor begins reverse revolutions. (While RL101 is "on", because increased torque is applied to the capstan motor, high voltage is applied).
When discharge of C101 is completed, TR101 and TR102 are turned off. RL101 is also turned off and voltage is supplied to the Pinch Roller Plunger as well as to the Brake Plunger and playback is effected.

3. FROM REVERSE TO FORWARD PLAYBACK

When the FWD Button is depressed or the sensing tape passes the sensing pole, TR111 is turned off, and TR110 is turned on. Because TR111 is turned off; RL105 and RL106 as well as RL1 are turned off. When RL106 is momentarily turned off, C102 passes R103 and VR101 and discharge commences. C102 discharge current flows to the base of TR101 and TR102 and they are turned on. When this occurs, RL101 is turned on and the Brake Plunger as well as the Pinch Roller Plunger are turned off. At this time, the capstan motor begins forward revolutions (While RL101 is "on", because increased torque is applied to the capstan motor, high voltage is applied.)
When discharge of C102 is completed, TR101 and TR102 is also turned off and voltage is supplied to the Pinch Roller Plunger as well as to the Brake Plunger and Forward Playback is effected. Charge of C101 is begun.

4. FAST FORWARD

When the Fast Forward Button is depressed, current flows to RL102 and RL103. At the same time, TR105 and TR106 is maintained at "on", and Fast Forward operates. 100V is applied to the Take-up Motor and about 11V to the Supply Motor.
When Fast Forward is effected from Forward Playback, D113 is activated and cuts off TR107.
When Fast Forward is effected from Forward Playback, D114 is activated and cuts off TR107.
When Fast Forward is effected from Reverse Playback, D114 is activated and cuts off TR111. When Fast Forward is effected from Rewind, TR105 remains "on", TR106 operates and RL103 is turned on.

5. REWIND

When the Rewind Button is depressed, TR105 is turned on. TR105 is maintained at "on" by means of RL102. 100V is applied to the Supply Motor and about 11V to the Take-up Motor.
When Rewind is effected from Forward Playback, D112 is activated and cuts off TR107. When Rewind is effected from Reverse Playback, D108 is activated and cuts off TR111. When Rewind is effected from Fast Forward, D104 is activated and cuts off TR106.

IX. SERVO MOTOR OPERATING PRINCIPLES

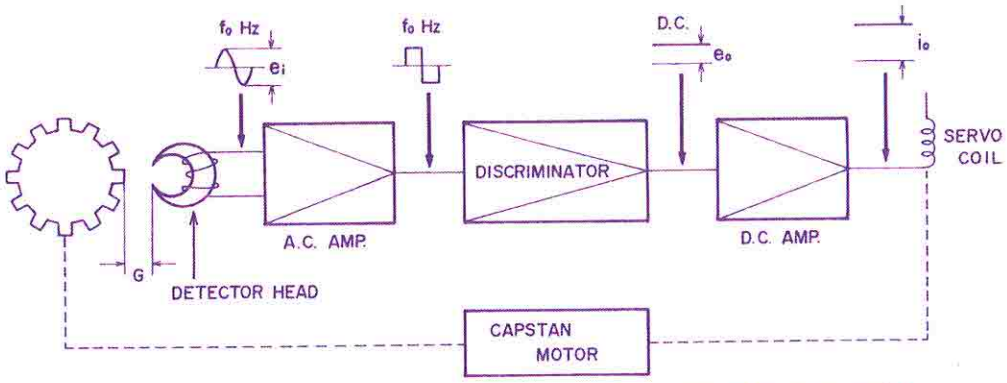

G(Gap): Adjust to obtain a detector head terminal voltage of 3 ±0.5 mV at 7-1/2 ips.

Fig. 31

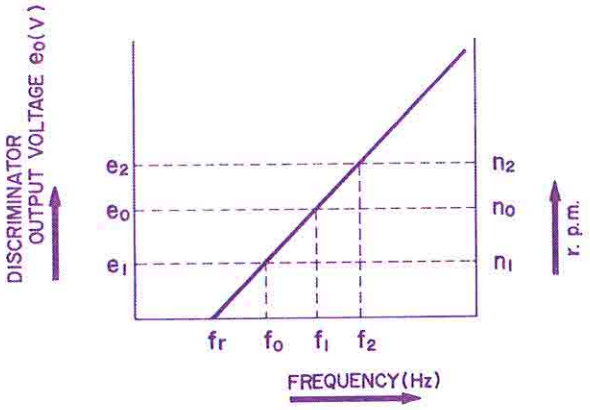

Fig. 32

1. The detector head core is comprised of a permanent magnet, and the gear installed on the motor, by means of the capstan motor revolutions, changes the magnetic flux of the detector head core. Accordingly, the detector head coil works in the same way and generates A.C. Voltage (becomes the detector signal described below). When this detector signal voltage (e_i) becomes detector signal frequency (f_o), this adjusts the capstan motor revolutions proportionately. (See Figs. 31 & 32)

2. When the detector signal voltage generated from the detector head is about 3 mV (at 7-1/2 ips), because the level is low, the perpendicular (up and down) waveform is amplified by the A.C. Amplifier unitil the waveform is clipped. (See Fig. 31)

3. Discriminator Coil L1 (VI2031SC-01) and C210 (0.051/50) at 7-1/2 ips and C211 (0.27/100) at 3-3/4 ips constitute the resonance circuit, and this resonance frequency becomes f_r. Because the detector signal frequency generated at the detector coil differs according to capstan motor revolutions, the capacity of the discriminator resonance condenser changes and the resonance frequency changes at the different tape speeds of 7-1/2 and 3-3/4 ips.

4. When the discriminator input frequency and the resonance frequency f_r are simultaneous, the D.C. Signal to be supplied to the next stage D.C. Amplifier is not generated. Consequently, when the capstan motor rotates at normal speed, a higher than resonance frequency f_r, detector signal, signal frequency f_o is established.

5. As shown in Chart 3, when electric current is not flowing to the capstan motor servo coil, the capstan motor revolutions are far faster than normal revolutions. Consequently, in order to maintain normal revolutions, an electro-magnetic field is generated at the servo coil by means of collector current flowing to TR209 (2SD234), and this serves as an electro-magnetic brake. This electro-magnetic brake and the load torque balances the capstan motor torque and normal revolutions are maintained.

TAPE SPEED	Capstan motor supply voltage	Capstan motor supply voltage at FWD or REV starting time	Voltage and frequency generated at the detector coil	Controlled capstan motor speed	Uncontrolled capstan motor speed
7-1/2 ips	110V	150V	3 mV±0.5 mV r.m.s. / 1040 Hz	520 r.p.m.	1420 r.p.m.
3-3/4 ips	85V	110V	1.5 mV±0.25 mV r.m.s. / 520 Hz	260 r.p.m.	1380 r.p.m.

Chart 3

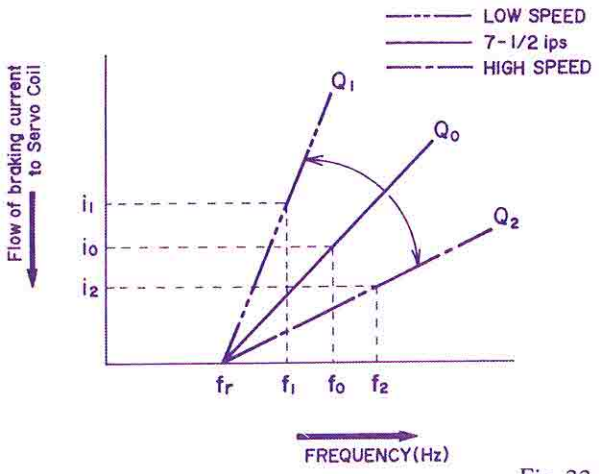

Fig. 33

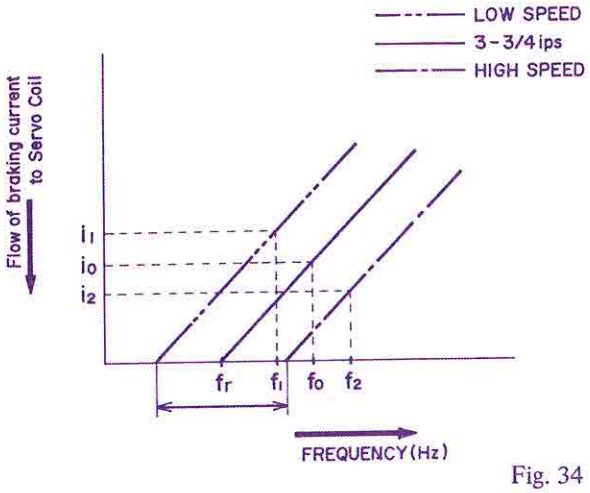

Fig. 34

6. In case of the capstan motor revolutions having reached the speed of n_2, the detector signal produced at the detector coil surpasses f_O and advances toward the higher f_2 frequency. (See Figs. 33 & 34). Accordingly, the flow of current to the servo coil increases, and because the electro-magnetic braking supplied to the capstan motor is increased, the capstan motor revolutions become slower, and normal revolutions are regained.

7. In case of the capstan motor revolutions having slowed to n_1, the detector signal produced at the detector coil drops to lower than f_O and descends toward the low f_1 frequency (See Figs. 33 & 34). Accordingly, the flow of current to the servo coil decreases, and because the electro-magnetic braking supplied to the capstan motor is decreased, the capstan motor revolutions become higher, and normal revolutions are regained.

8. To obtain the proper number of revolutions, adjustment of the flow of brake current to the servo coil is necessary.
   1) At 3-3/4 ips tape speed
      As shown in Fig. 33, resonance frequency f_r (between the arrow mark) is changed by adjusting the dust core of discriminator coil L1 (VI2031SCO1). Accordingly, f_O is also changed between f_1 and f_2, and the flow of braking current (i_O) to the servo coil is also changed between i_1 and i_2. Consequently, correct tape speed can be attained by using a tape speed measuring tape and a Frequency Counter and adjusting the dust core of coil L1.
   2) At 7-1/2 ips tape speed
      As shown in Fig. 34, Q_O of the resonance circuit (within the arrow mark with f_r as center frequency) is changed by adjusting discriminator semi-fixed resistor VR202 (5 kB). Therefore, f_O is also changed between f_1 and f_2 and, the flow of current (i_O) to the servo coil is also changed between i_1 and i_2. Consequently, correct tape speed can be attained by using a tape speed measuring tape and a Frequency Counter and adjusting semi-fixed resistor VR202.

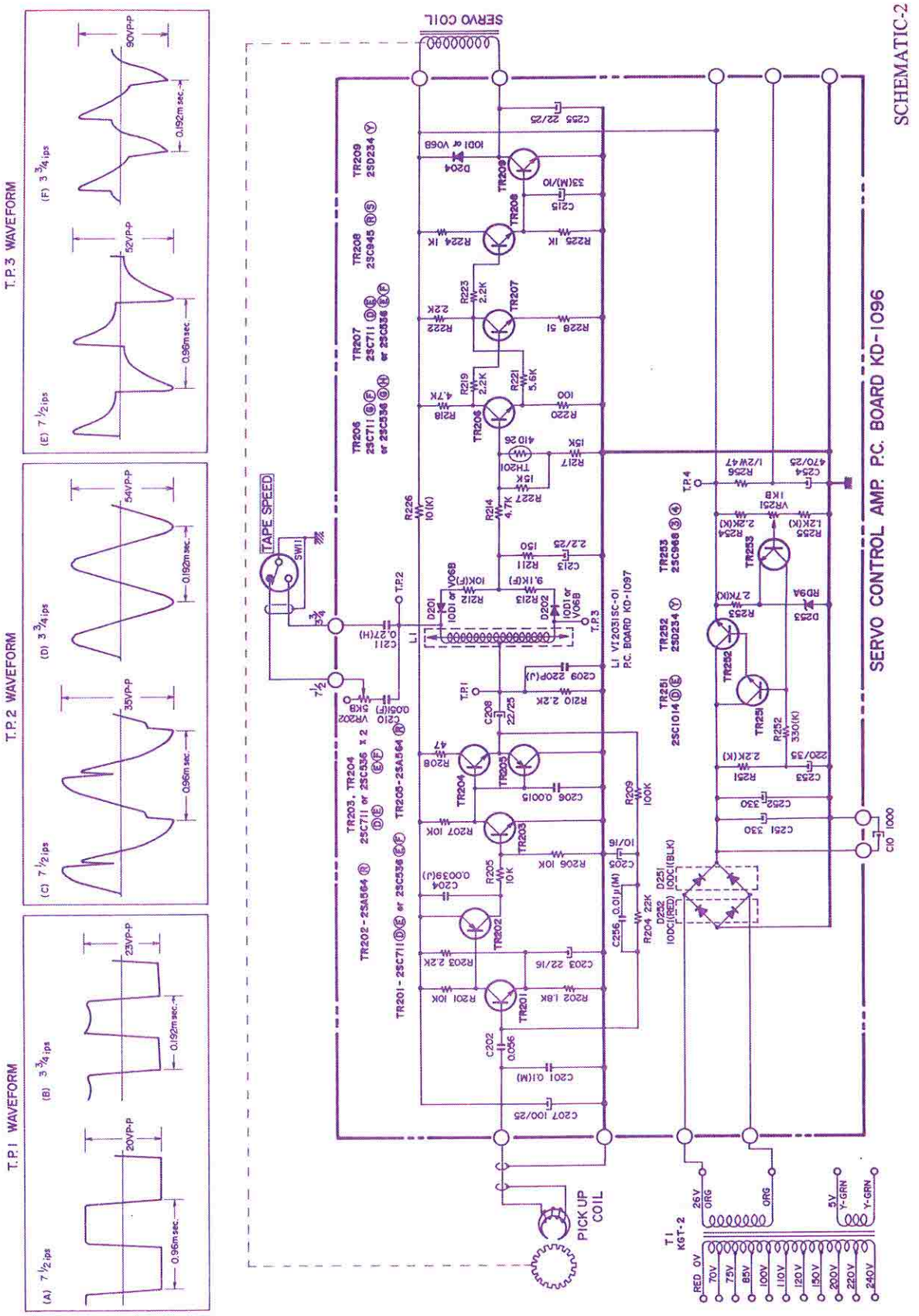
T.P.1 WAVEFORM
T.P.2 WAVEFORM
T.P.3 WAVEFORM
SERVO COIL
TAPE SPEED
PICK UP COIL
SERVO CONTROL AMP. P.C. BOARD KD-1096
SCHEMATIC-2

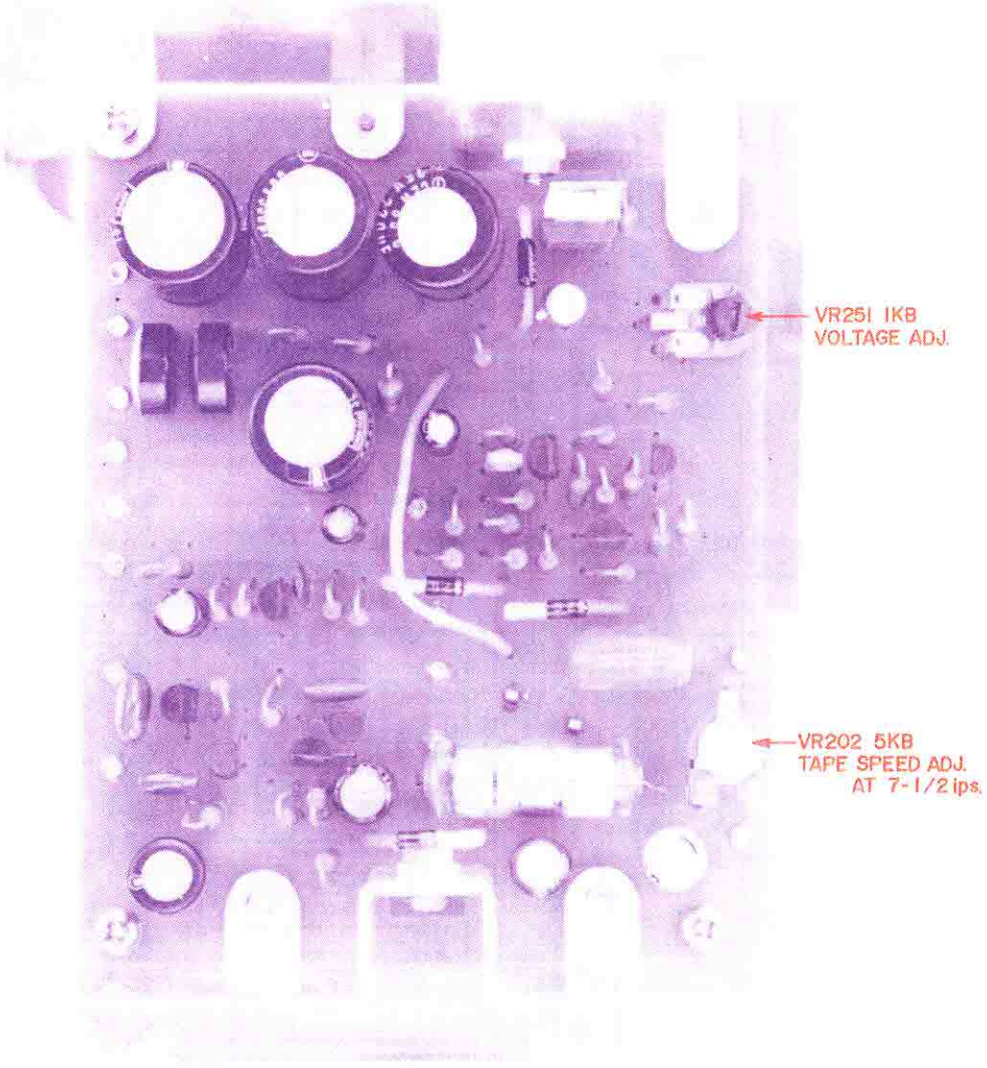

Fig. 35 SERVO CONTROL AMP. & POWER SUPPLY P.C. BOARD (FACE SIDE)

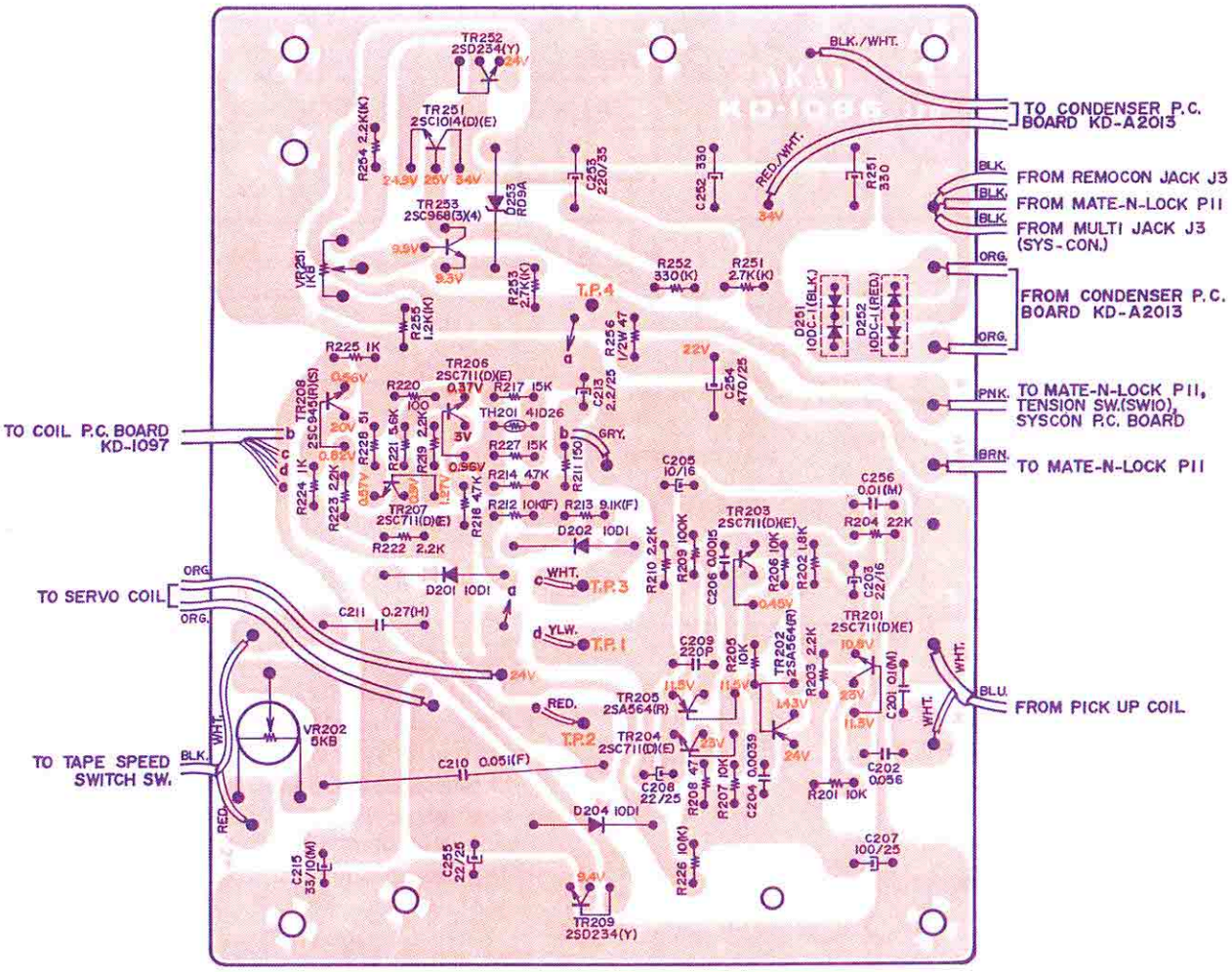

Fig. 36 SERVO CONTROL AMP. & POWER SUPPLY P.C. BOARD KD-1096 (REVERSE SIDE)

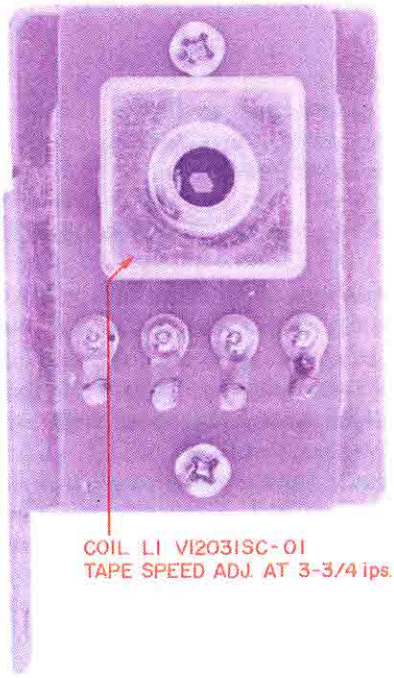

Fig. 37 COIL P.C. BOARD (FACE SIDE)

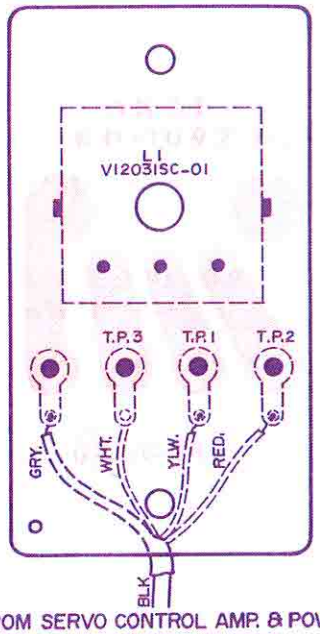

Fig. 38 COIL P.C. BOARD KD-1097 (REVERSE SIDE)

X. OPERATION OF REC. DOLBY N.R. CIRCUIT

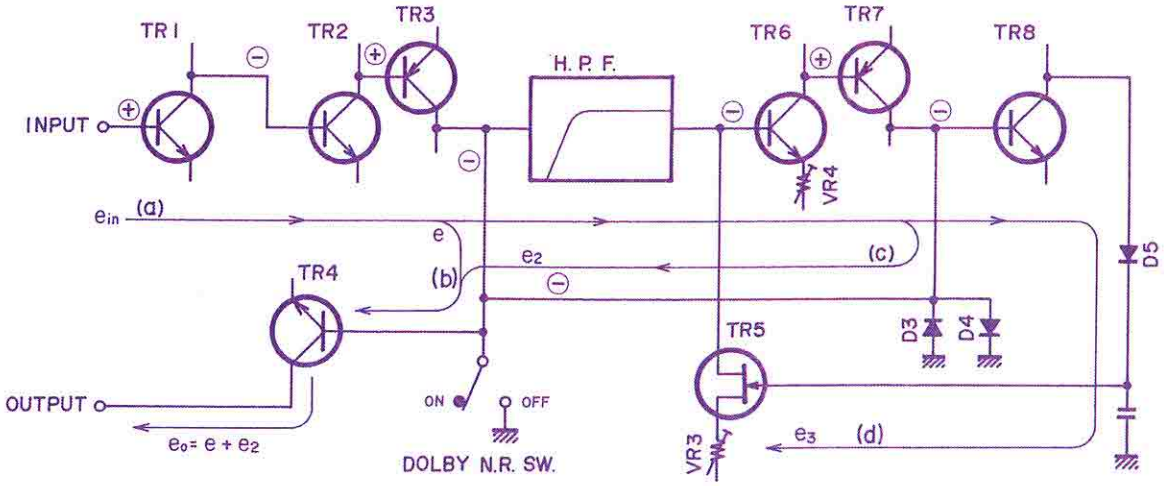

Fig. 39 REC. DOLBY N.R. DIAGRAM

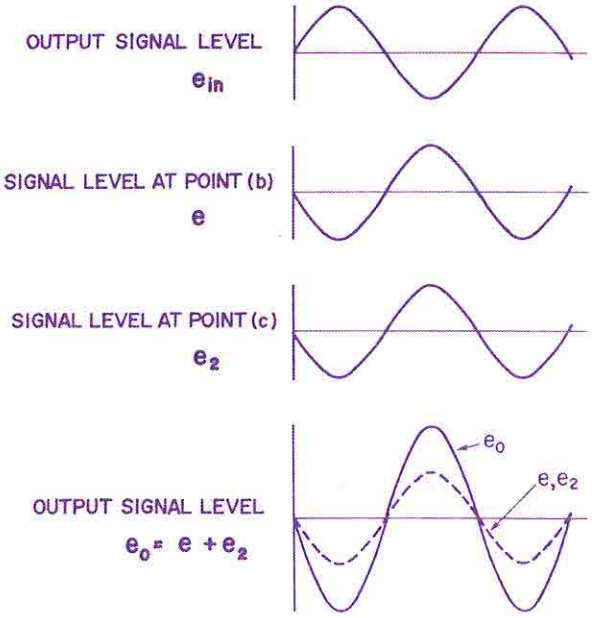

Fig. 40 Levels and Phases of Various Points at Individual Frequencies.

1. RECORDING DOLBY N.R.

(Refer to Figs. 39 & 40)

In Fig. 39, input signal a passes TR1, TR2, TR3, and becomes the output signal. The signal emitted from TR3 passes the H.P.F. (high pass filter) and is amplified at TR6 and TR7. At this time, the signal at TR6 is controlled by FET TR5 gate D.C. bias and the TR7 output signal is changed by the characteristics of Diodes D3 and D4 and emitted as e_2. This e_2 output signal is in-phased with and added to TR3 output signal at point (b), and emitted as Dolbyized output signal e_O.

Consequently, in case the input signal level e is small, because FET TR5 has a certain impedance value and becomes an electronic attenuator, output signal e emitted at point (c) is decreased at the H.P.F. (high pass filter) and TR5 and becomes e/k. Then it is amplified at TR6, TR7 and when this degree of amplification becomes A, the signal level at point (c) becomes formula (1) as described below.

$$e_2 = (e/K)A \cdot 1 \text{ ----- } (1)$$

Where 1 is decided by the attenuation volume of Diodes D3 and D4, if (A/K) 1 = m, formula (1) becomes formula (2) as described below.

$$e_2 = me \text{ ----- } (2)$$

Because e_2 and input signal e of the above formula is composited, this output signal e_O becomes formula (3) as described below.

$$e_O = e + e_2 = e + me \text{ ----- } (3)$$

With regards to the relationship of e and me in formula (3) above, because in the Dolby N.R. System, "the value of e_O is 10 dB higher than e", at levels of less than -30 dB from the Dolby level, output signal e_O becomes 10 dB higher than input signal e on signals over 400 Hz.

Also, in case input signal e is high, it is amplified at TR8 and D.C. Voltage e_3 which was rectified at Diode D5 is also input proportioned and becomes large.

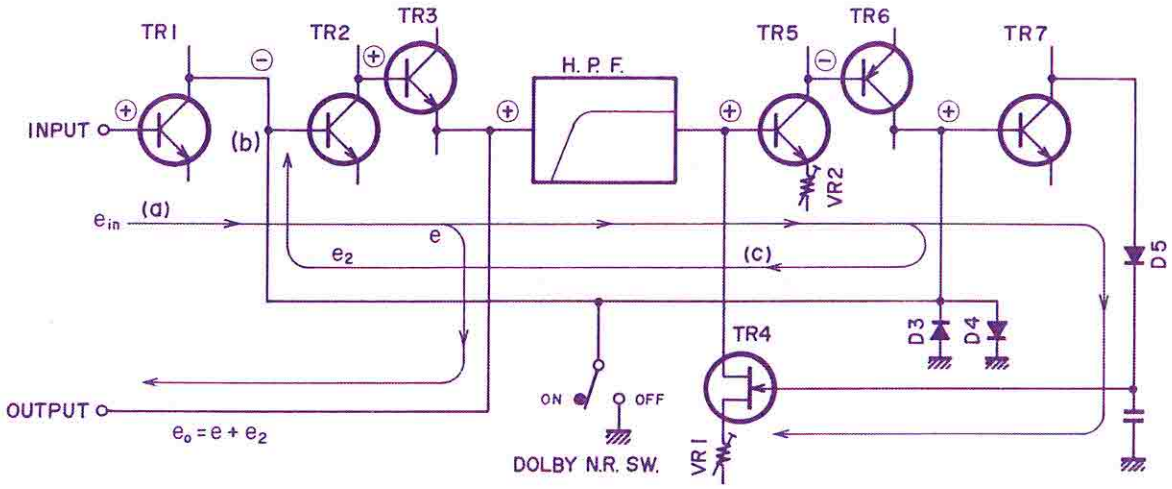

Fig. 41 P.B. DOLBY N.R. DIAGRAM

Accordingly, when e_3 becomes large, FET TR5 impedance is lowered and when the signal level e_2 of point (c) gradually becomes smaller, the formula at levels over the Dolby level becomes formula (4) as described below.

$$e_O = e + me = e \quad \text{----- (4)}$$

$$(\quad e \gg me)$$

Accordingly, the characteristics of the input and output signals become linear.

* H.P.F. (High Pass Filter): Signals over 400 Hz are attenuated and filtered at 18 dB octave.

2. PLAYBACK DOLBY N.R. CIRCUIT (Refer to Figs. 41 & 42)

In Fig. 41. input signal e passes TR1, TR2, and TR3 and becomes the output signal. The signal emitted from TR3 passes the H.P.F. (high pass filter) and is amplified at TR5 and TR6. At this time, the signal at TR5 is controlled by FET TR4 gate D.C. bias and the TR6 output signal is changed by the characteristics of Diodes D3 and D4 and emitted as e_2. This e_2 output signal is phase-inverted with and added to TR1 output signal e at point (b), and emitted as Dolbyized output signal e_O.

Accordingly, the operation of the playback circuit differs from the recording circuit only in that the added signal becomes inverted, and, because formula (3) becomes $e_O = e + (-e_2) = e + (-me)$, it is the exact opposite of recording Dolby N.R.

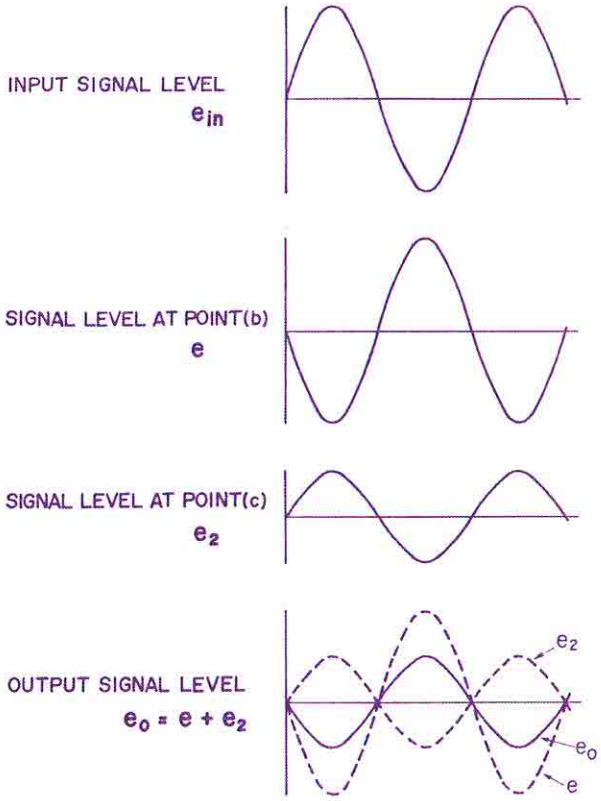

Fig. 42 Levels and Phases of Various Points at Individual Frequencies

XI. COMPOSITE VIEWS OF COMPONENTS

1. OUTPUT AMP. P.C. BOARD KD-A5215

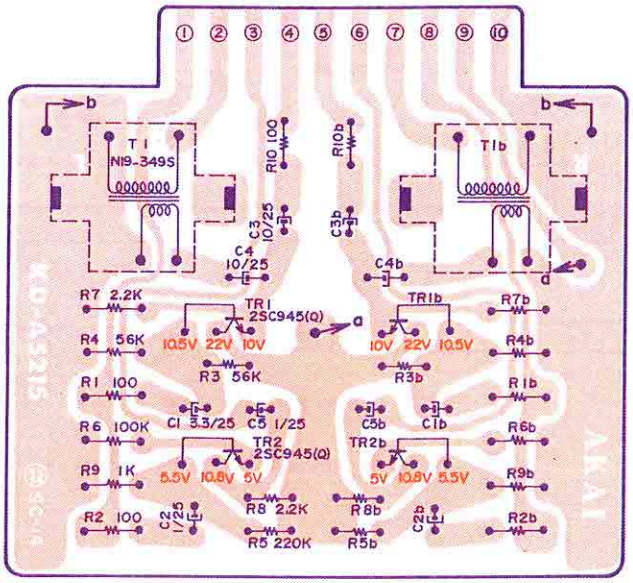

2. VOLUME P.C. BOARD E KD-A5218

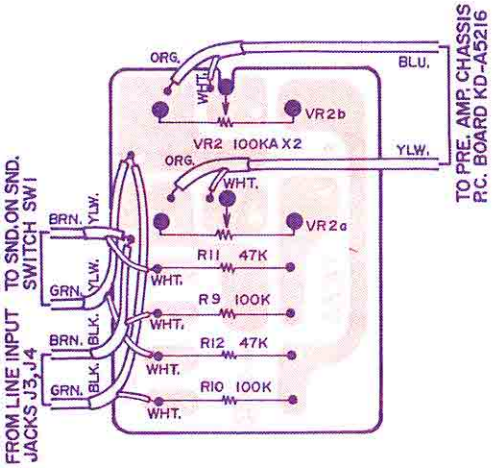

3. VOLUME P.C. BOARD D KD-A5206

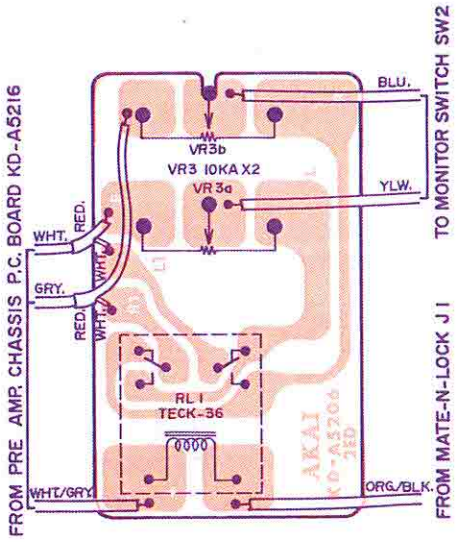

4. SWITCH P.C. BOARD KD-A5217

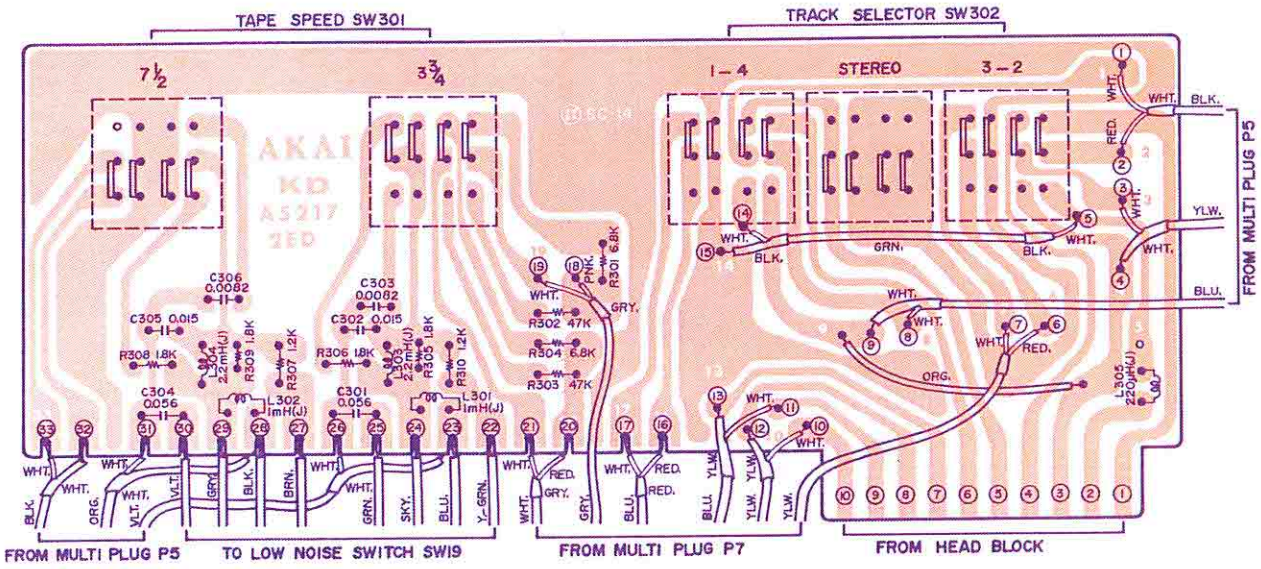

5. CONDENSER P.C. BOARD KD-A2013

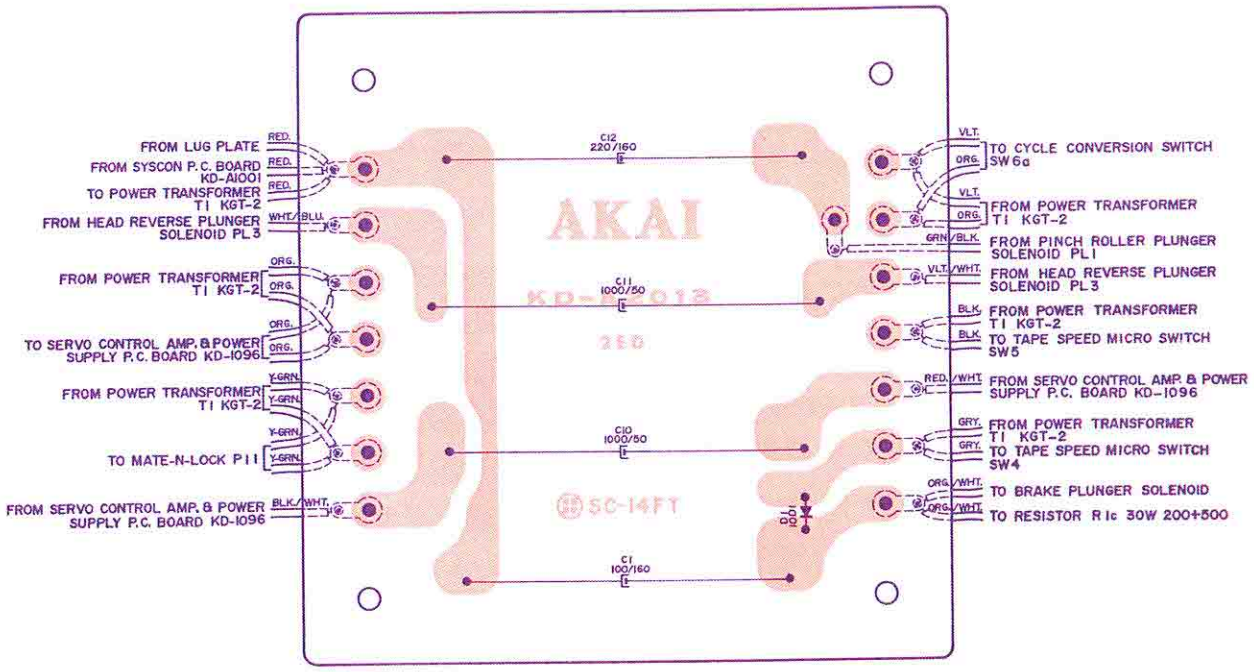

6. PRE-AMP. CHASSIS P.C. BOARD KD-A5216

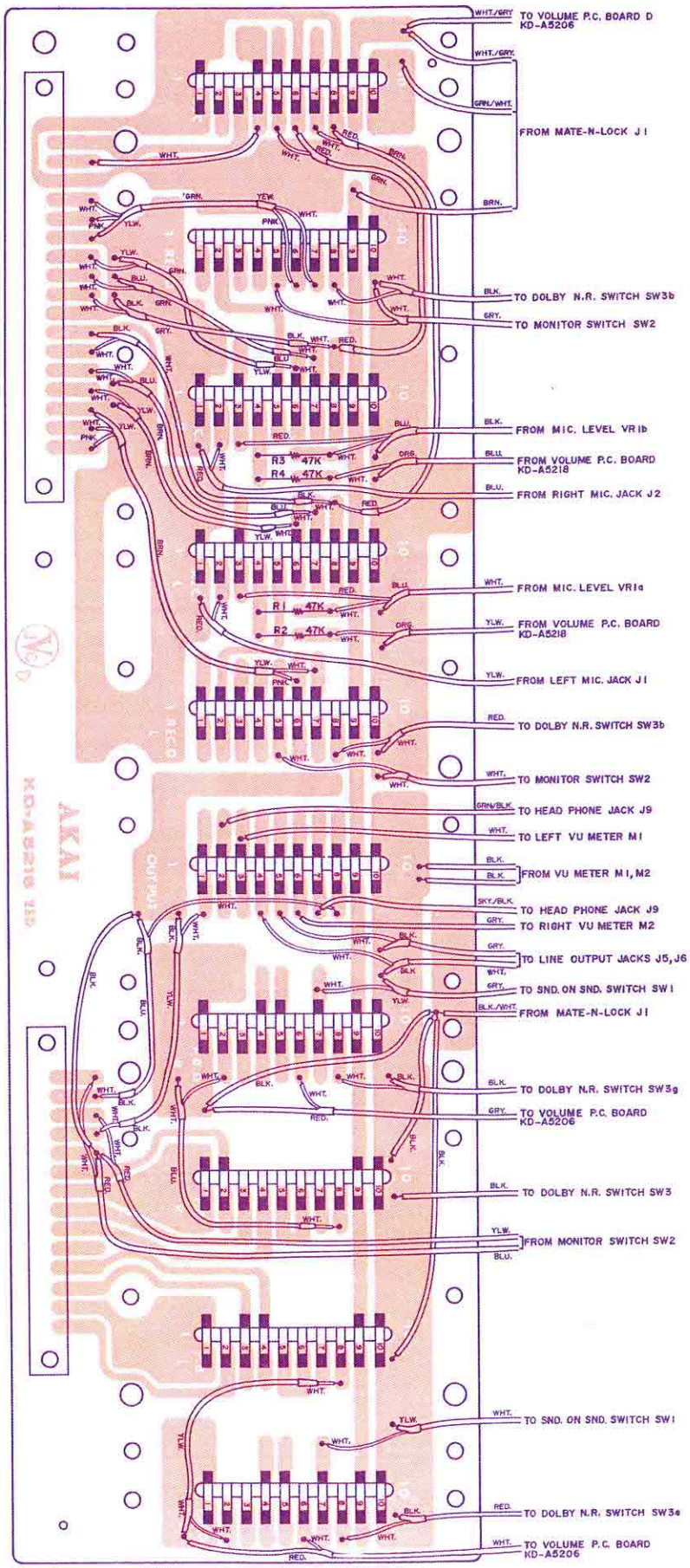

SECTION 2

PARTS LIST

TABLE OF CONTENTS

FIG. 1 HEAD BLOCK 39
FIG. 2 REEL TABLE & REEL MOTOR BLOCK 41
FIG. 3 MAIN MOTOR BLOCK 42
FIG. 4 OPERATION BLOCK 43
FIG. 5 MECHANISM ASSEMBLY BLOCK 44
FIG. 6 REC. DOLBY P.C. BOARD (KD-A5214) BLOCK ... 46
FIG. 7 P.B. DOLBY P.C. BOARD (KD-A5213) BLOCK..... 47
FIG. 8 REC. AMP. P.C. BOARD (KD-A5207) BLOCK..... 48
FIG. 9 P.B. AMP. P.C. BOARD (KD-A5208) BLOCK 49
FIG. 10 SERVO P.C. BOARD (KD-1096) BLOCK 49
FIG. 11 SYS. CON. P.C. BOARD (KD-A1001A) BLOCK 51
FIG. 12 OSC. P.C. BOARD (KD-A5209) BLOCK 52
FIG. 13 OUTPUT CIRCUIT P.C. BOARD (KD-A5215) BLOCK 53
FIG. 14 SWITCH P.C. BOARD (KD-A5217) BLOCK 53
FIG. 15 PRE-AMP. CHASSIS P.C. BOARD (KD-A5216) BLOCK 54
FIG. 16 COIL P.C. BOARD (KD-1097) BLOCK 54
FIG. 17 POWER SUPPLY BLOCK 55
FIG. 18 SUB PANEL BLOCK 57
FIG. 19 AMPLIFIER ASSEMBLY BLOCK 58
FIG. 20 FINAL ASSEMBLY BLOCK 60
INDEX 61

HOW TO USE THIS PARTS LIST

1. This parts list is compiled by various individual blocks based on assembly process.
2. When ordering parts, please describe parts number, serial number, and model number in detail.
3. How to read list.

The reference number corresponds with illustration or photo number of that particular parts list.

This number corresponds with the Figure Number.

This number corresponds with the individual parts index number in that figure.

A small "x" indicates the inability to show that particular part in the Photo or Illustration.

12-115x

Schematic Diagram Number of individual manufactured part.
(not required for parts order)

Quantity of particular part required.

Ref. No.	Parts No.	Description	Schematic No.	Q'ty
		FLYWHEEL BLOCK #13		
12-115x	800425	Flywheel Block Assy. Comp.	RDG #13	1
12-116	244506	Flywheel Only	RD-233	1
12-117x	244754	Felt, Flywheel	RD-275	1
12-118	251324	Main Metal Case	RD-236	1
12-119	253080	Main Metal	RD-237	1

4. The symbol numbers shown on the P.C. Board list can be matched with the Composite Views of components of the Schematic Diagram or Service Manual.
5. The indications of Resistors and Capacitors in the photos of P.C. Board are being eliminated.
6. The shape of the parts and parts name, etc. can be confirmed by comparing them with the parts shown on the Electrical Parts List Table of P.C. Board.
7. Both the kind of part and installation position can be determined by the Parts Number. To determine where a parts number is listed, utilize Parts Index at end of Parts List.
   It is necessary first of all to find the Parts Number. This can be accomplished by using the Reference Number listed at right of parts number in the Parts Index. (meaning of ref. no. outlined in Item 3 above).
8. Utilize separate "Price List for Parts" to determine unit price. The most simple method of finding parts Price is to utilize the reference number.

ELECTRICAL PARTS LIST TABLE

Because the indication of resistors and capacitors in the P. C. Board photos are being eliminated, please confirm parts name and shape by comparing them with the parts shown in this table.	1 Solid Resistor	2 Stopper Type Insulator Type Carbon Resistor	3 Metal Oxide Film Resistor
4 Cement Resistor	5 Wire-Wound Resistor	6 Thermister	7 Enamel Resistor
1 MP Capacitor (Tubular Type)	2 Plastic Capacitor	3 Mylar Capacitor	4 VFM (Hi-Q) Capacitor
5 Mylar Capacitor	6 Tantalum Capacitor	7 Oil Capacitor (Tubular Type)	8 Vertical Type (Tubular Type) Styrol Capacitor
9 Electrolytic Capacitor (Tubular Type)	10 Vertical Type (Tubular Type) Electrolytic Capacitor	11 Ceramic Capacitor	12 Metalized Mylar (Paper) Capacitor
13 Trimmer Condenser		VR Semi-Fixed Volume	
L Ferri Inductor	TR Transistor		
CR Spark Quencher	D Diode (Silicon, Zener, Germanium)		

FIG. 1 ILLUSTRATION OF HEAD BLOCK

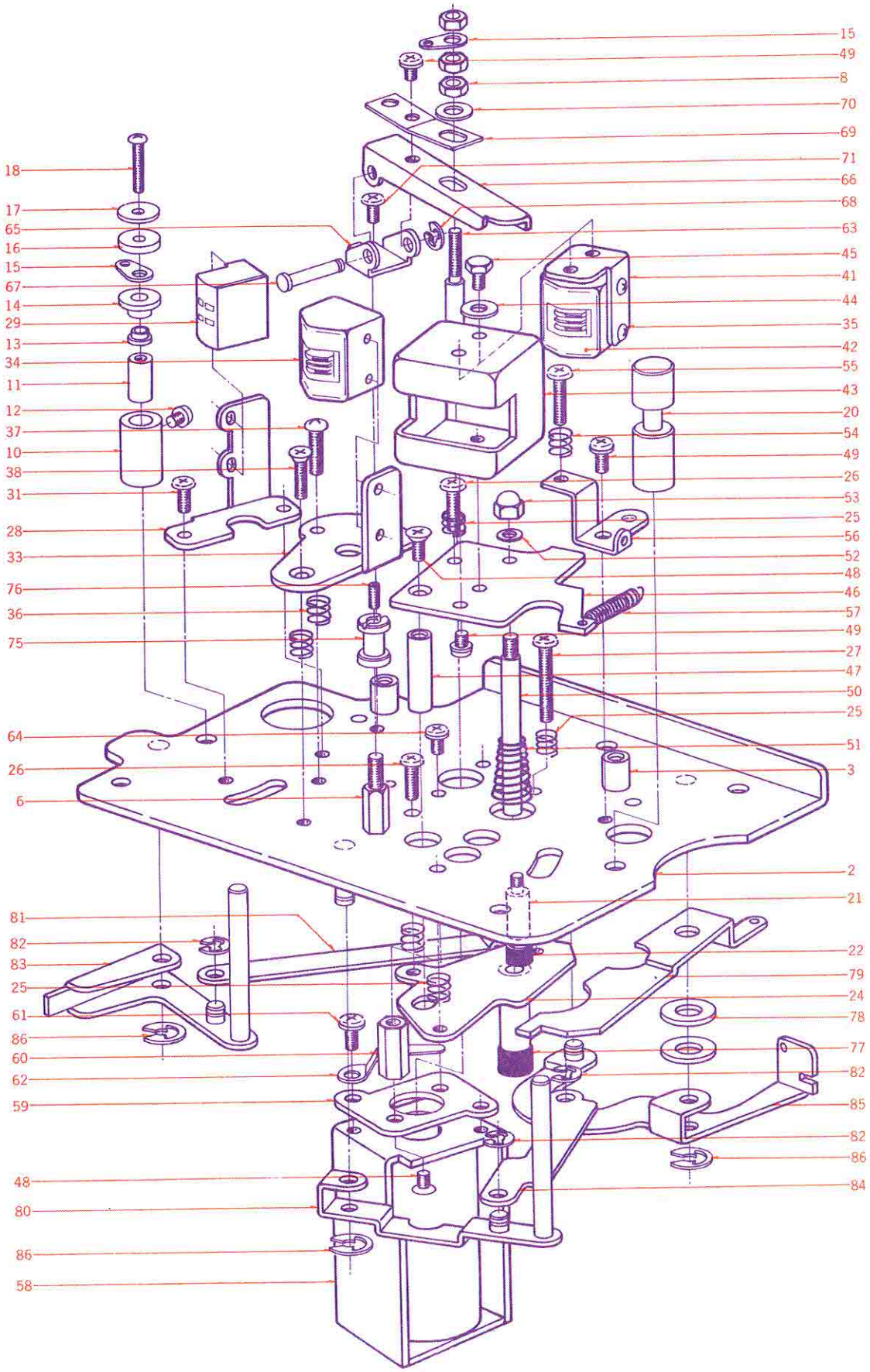

HEAD BLOCK

Ref. No.	Parts No.	Description	Schematic No.	Q'ty
1-1x	BH426240	Head Block Comp.	KG	1
1-2	HZ426486	Head Chassis	KD-A0001	1
1-3	HZ396494	Mech. Panel Prop	KD-0006	2
1-4x	ZW403301	Screw, binding head 3x6, w/washer		1
1-5x	ZW200305	Screw, countersunk head 3x5		1
1-6	HZ412637	Tape Guide Post	RD-A30	1
1-7x	ZW273802	M3 Toothed Lock Washer		2
1-8	ZW273756	M3 Nut		4
1-9x	BZ435003	Sensing Guide (B) Block Comp.	KD, KF	1
1-10	HZ396584	Sensing Guide C	KD-0015	1
1-11	HZ396797	Sensing Guide	KD-0036	1
1-12	ZW439402	Screw, round head 3x3.2		1
1-13	HZ317632	Insulator Collar A	MR-36	1
1-14	HZ396595	Sensing Guide D	KD-0016	1
1-15	ZW273778	M3 Earth Lug		3
1-16	HZ396505	Insulator Collar	KD-0007	1
1-17	ZW296786	Tape Guide Washer	KD-0035	1
1-18	ZW202252	Screw, round head 2.3x12		1
1-19x	ZW434250	Screw, pan head 4x8, w/washer		2
1-20	HZ803597	Tape Guide A	RD-3	1
1-21	HZ434272	Shifter Stopper Collar	KD-A0010	1
1-22	MZ428343	KD Stopper Rubber	KD-1088	1
1-23x	ZW417148	Screw, binding head 3x15		1
1-24	HZ426666	PH Adjust Base, w/metal	KD-A0004	1
1-25	ZG206144	Angle Adjust Spring	RD-16	3
1-26	ZW426611	Screw, binding head 3x12		2
1-27	ZW426655	Screw, binding head 3x20		1
1-28	HZ382680	Erase Head Base	RD-A5	1
1-29	HE412187	ERASE HEAD E4-250		1
1-30x	ZW201464	Screw, pan head 2x3		2
1-31	ZW323728	Screw, binding head 3x5		2
1-32x	ZW273778	M3 Earth Lug		2
1-33	HZ382691	RH Head Angle	RD-A6	1
1-34	HR384513	REC. HEAD R4-200		1
1-35	ZW383646	Screw, pan head 2x4		4
1-36	ZG382757	Angle Adjust Spring D	RD-A12	3
1-37	ZW336868	Screw, round head 3x12		3
1-38	ZW200226	Screw, countersunk head 3x12 D=5		1
1-39x	EA463206	Terminal P.C. Board A	RD-A36	3
1-40x	EA466547	Terminal P.C. Board B	KD-A0013	1
1-41	HZ382656	PH Head Angle	RD-A2	1
1-42	HP384524	P.B. HEAD P4-200		1
1-43	HZ382667	Triple-shield	RD-A3	1
1-44	ZW426622	Washer (SPC)D3.4x7.8x0.5t		2
1-45	ZW403312	Hexagon Bolt 3x4		2
1-46	HZ426497	PH Head Base	KD-A0002	1
1-47	HZ426508	PH Hold-down Guide	KD-A0003	1
1-48	ZW200362	Screw, countersunk head 3x5 D=5		3
1-49	ZW345982	Screw, binding head 3x5, w/washer		5
1-50	MS809987	PH Hold-down Base Shaft	RD-15	1
1-51	ZG321445	RD Reverse Spring	RD-18	1
1-52	ZW259648	Washer (PBS)D3x5x0.1t		1
1-53	ZW273868	M3 Cap Nut		1
1-54	ZG303300	Angle Adjust Spring B	RD-55	1
1-55	ZW345914	Screw, round head 3x10		1
1-56	HZ810011	PH Base Stopper B	RD-19	1
1-57	ZG810055	PH Hold-down Base Pull Spring	RD-52	1
1-58	EP804813	Plunger Solenoid M-10B-34V	44-1-16	1
1-59	HZ317698	Plunger Base	RD-21	1
1-60	HZ321344	Plunger Retaining Prop	RD-7	2
1-61	ZW323728	Screw, binding head 3x5		1
1-62	HZ321366	Retaining Plate	3A-72	1
1-63	HZ321377	Plunger Joint A	RD-22	1
1-64	ZW328577	Screw, binding head 3x8, w/washer		2
1-65	HZ320940	PH Hold-down Lever Support	RD-23	1
1-66	HL809998	PH Hold-down Lever	RD-24	1
1-67	ZW257477	Connecting Pin	RD-211	1
1-68	ZW270088	'E' Ring 1.9M	6-1-9	1
1-69	ZG246857	Pull Lever Spring	RD-25	1
1-70	ZW426587	Washer (SPC)D 3.1x8x0.5t		1
1-71	ZW413223	Screw, binding head 3x5, w/washer		1
1-72x	EJ364915	10P Multi-jack PB01-10S-24E2G	31-4-15	1
1-73x	MZ373318	Nylon Clip HP-3N		1
1-74x	ZW399295	Screw, binding head 3x6		1
1-75	HZ231884	Tape Guide B	RD-5	1
1-76	ZW384840	Set Screw 3x5(cup)		1
1-77	HZ321434	Dust-proof Cap B	RD-54	1
1-78	ZW260201	Washer (Nylon)D6.2x13x1t		2
1-79	HZ433890	Shifter Stopper B	KD-A0011	1
1-80	HL426510	Shifter Lever (1), w/pin	KD-A0005	1
1-81	HZ426543	Shifter Joint 1	KD-A0008	1
1-82	ZW270101	'E' Ring 3M	6-1-9	4
1-83	HL426521	Shifter Lever (2), w/pin	KD-A0006	1
1-84	HZ426554	Shifter Joint 2	KD-A0009	1
1-85	HL426565	Shifter Lever (3), w/pin	KD-A0007	1
1-86	ZW290283	'U' Ring 2.85M	6-1-1	3

When ordering parts, please describe Parts Number, Serial Number, and Model Number in detail.

FIG. 2 ILLUSTRATION OF REEL TABLE & REEL MOTOR BLOCK

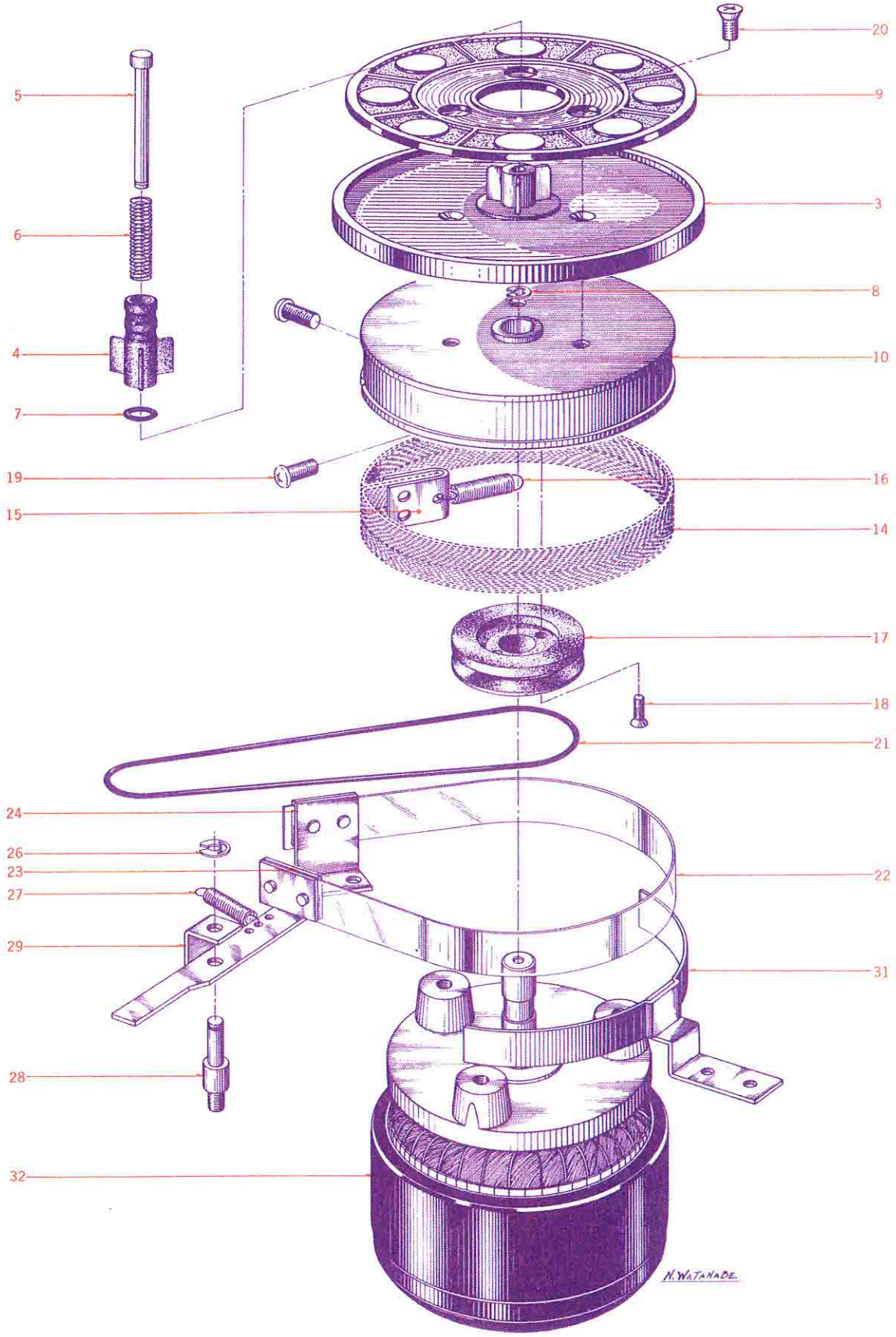

REEL TABLE & REEL MOTOR BLOCK

Ref. No.	Parts No.	Description	Schematic No.	Q'ty
2-1x	BR499590	Supply Reel Table Block Comp.	KF-2	1
2-2x	BR499588	Take-up Reel Table Block Comp.	KF-2	1
2-3	MT488158	RD Reel Table Disk A	RD-272	1
2-4	MT255420	Reel Retainer	3R-102	1
2-5	MS342000	Reel Shaft	3R-108	1
2-6	ZG255633	Reel Spring	3R-109	1
2-7	MT297663	3R 'O' Ring 2.9x1.65M	3R-139	1
2-8	ZW270088	'E' Ring 1.9M	6-1-9	1
2-9	MT473422	Reel Table Rubber (KH)	KH-2042	1
2-10	MT495606	Brake Drum (R) A (Take-up)	MR-216	1
2-11x	MT495617	Brake Drum (L) A (Supply)	MR-216	1
2-12x	ZW273778	M3 Earth Lug		2
2-13x	ZW425981	Screw, binding head 3x3		2
2-14	MT317474	Brake Cloth	MR-256	1
2-15	MT317485	U Metal Fitting	MR-218	1
2-16	ZG317496	Felt Tension Spring	MR-260	1
2-17	MR317507	Counter Pulley (Take-up)	MR-217	1
2-18	ZW516644	Screw, countersunk head 2.3x10		2
2-19	ZW424056	Screw, pan head 4x10		2
2-20	ZW403222	Screw, countersunk head 3x10		3
2-21	MB303535	Counter Belt D91x1.6	3A-617	1
2-22	MB314987	Brake Band	MR-213	2
2-23	MZ314998	Brake Band Retaining Plate	MR-212	4
2-24	MZ315000	Brake Band Support	MR-214	2
2-25x	ZW323728	Screw, binding head 3x5		12
2-26	ZW290283	'U' Ring 2.85M	6-1-1	2
2-27	ZG315011	Brake Lever Spring	MR-116	2
2-28	MZ317373	Brake Lever Prop	MR-102	2
2-29	ML314976	Brake Lever A (Take-up)	MR-210	1
2-30x	ML396810	Brake Lever B (Supply)	KD-1038	1
2-31	MZ317406	Brake Band Guide	MR-120	2
2-32	BM314741	Reel Motor Block Comp. (24X0-2)	KD, MC, MS, KF	1

When ordering parts, please describe Parts Number, Serial Number, and Model Number in detail.

FIG. 3 ILLUSTRATION OF MAIN MOTOR BLOCK

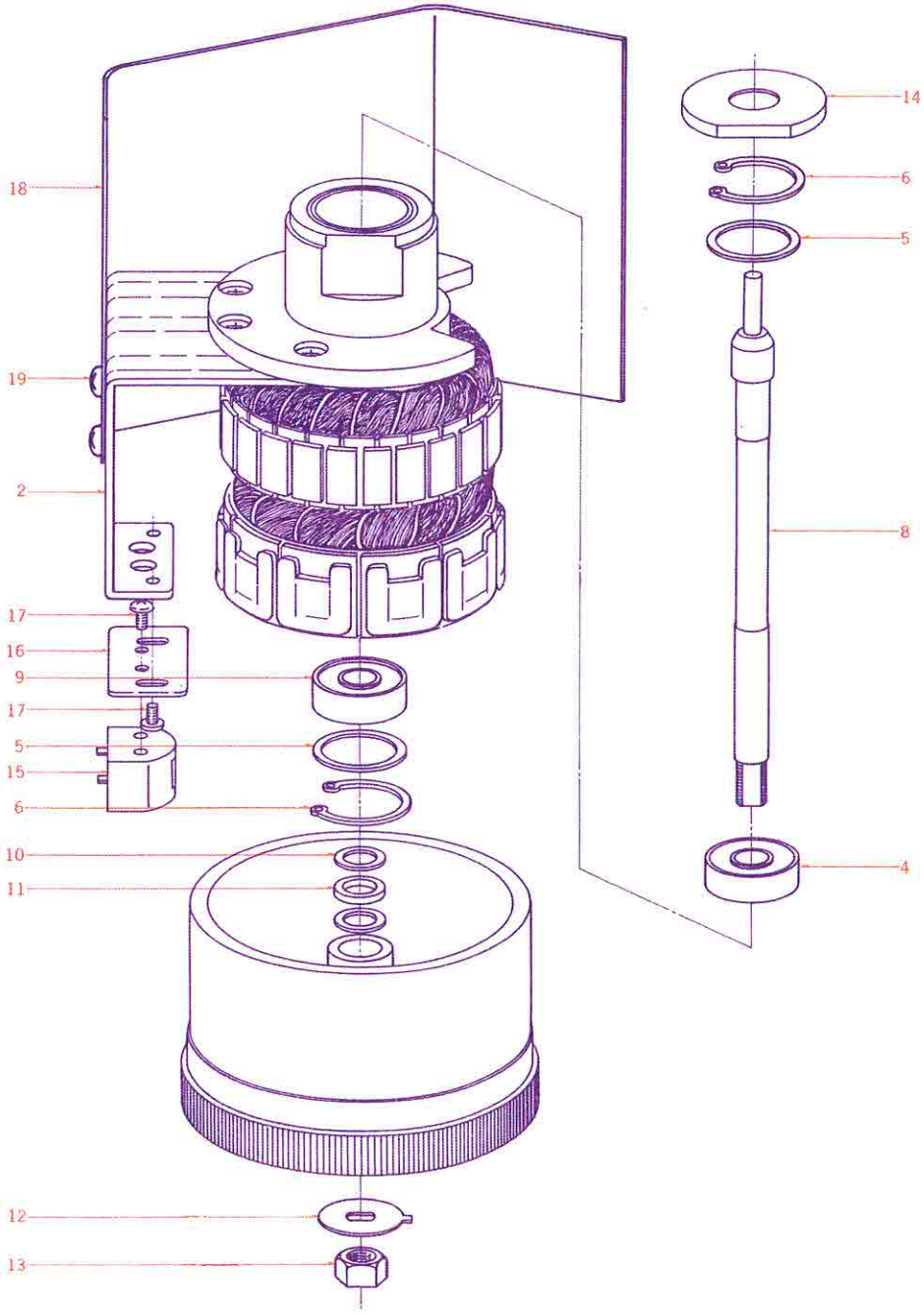

MAIN MOTOR BLOCK

Ref. No.	Parts No.	Description	Schematic No.	Q'ty
3-1x	BM423854	Main Motor Block Comp. (SCM-24)	KD,KF,KH	1
3-2	MZ405437	Detector Head Mt. Base	KD-7029	1
3-3x	ZW419747	Screw, countersunk head 4x6		4
3-4	MV408510	Bearing 608VVC2E-AV2-L	100707	1
3-5	ZW398125	Adjust Washer A	KD-7019	2
3-6	ZW206021	'C' Ring, hollow D22	6-1-2	2
3-7x	ZW391476	Set Screw, hexagon socket 4x4(cup)		1
3-8	MS424192	Shaft	KD-7056	1
3-9	MV248130	Bearing 608VVC2E-B32	100707	1
3-10	ZW321592	Washer (SUS)D8.1x13x0.3t		2
3-11	ZW356883	Washer (Hycar)D8.3x11.8x0.5t		3
3-12	ZW398158	Servo Motor Anti Loosening Washer	KD-7022	1
3-13	ZW403536	M7 Nut P=0.5		1
3-14	MZ398182	Cap	KD-7026	1
3-15	HK398452	DETECTOR HEAD	KD,KF,KH	1
3-16	MZ400421	Detector Head Plate	KD-3008	1
3-17	ZW201475	Screw, pan head 2x3		2
3-18	MZ467111	Servo Motor Shield	KD-A1010	2
3-19	ZW323728	Screw, binding head 3x5		4

When ordering parts, please describe Parts Number, Serial Number, and Model Number in detail.

FIG. 4 ILLUSTRATION OF OPERATION BLOCK

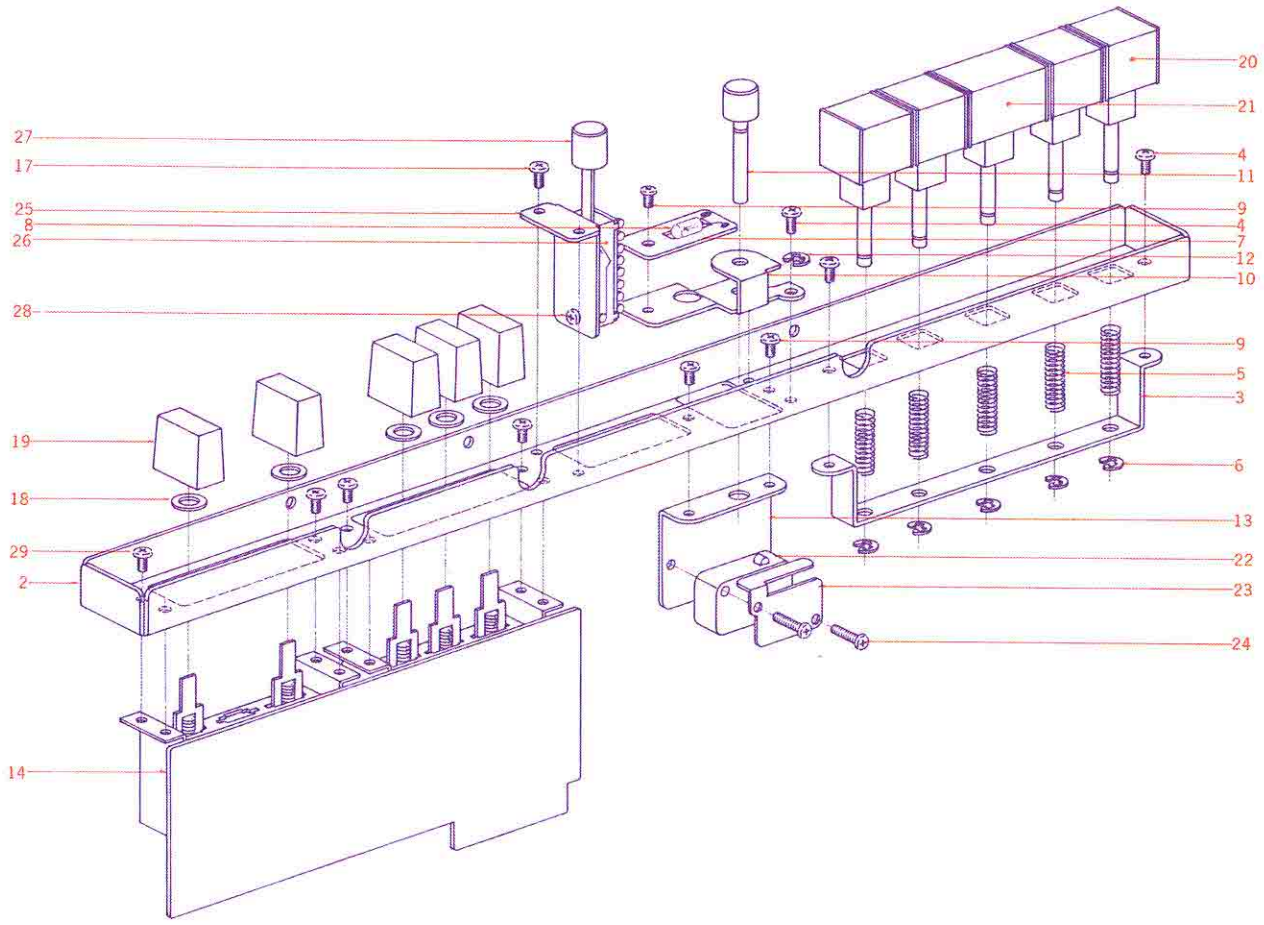

OPERATION BLOCK

Ref. No.	Parts No.	Description	Schematic No.	Q'ty
4-1x	BZ493356	Operation Block Comp.	KD	1
4-2	MZ396707	Operation Button Base	KD-2001	1
4-3	MZ396674	Operation Button Supporting Base	KD-2002	1
4-4	ZW472274	Tapping Screw #2 3x6 (binding)		4
4-5	ZG428398	Operation Button Spring	KD-2058	5
4-6	ZW270101	'E' Ring 3M	6-1-9	5
4-7	EA396898	Nèon Lamp P.C. Board	KD-1068	1
4-8	EL390576	Pilot Lamp RM6-24V-50MA	28-2-6	1
4-9	ZW323728	Screw, binding head 3x5		3
4-10	MZ466108	Rec. Button Table	KD-A2011	1
4-11	SB438265	Rec. Button	KF-2015	1
4-12	ZW270101	'E' Ring 3M	6-1-9	1
4-13	MZ466097	Micro Switch Table	KD-A2010	1
4-14	BA493367	Switch P.C. Board Comp. (KD-A5217)		1
4-15x	ZW273778	M3 Earth Lug		1
4-16x	ZW379405	Iso Screw, binding head 3x6		6
4-17	ZW472274	Tapping Screw #2 3x6(binding)		2
4-18	ZW403200	Washer (SPC)D6.2x13x1t		5
4-19	SK210521	Push Button Switch Knob	RD-506	5
4-20	SB496440	Operation Button A2	KD-A2204	4
4-21	SB496451	Operation Button B2	KD-A2205	1
4-22	ES250075	Micro Switch V-1A10 U/L	25-1-8	1
4-23	ZG466154	Switch Spring	KD-A2012	1
4-24	ZW413785	Screw, binding head 3x12		2
4-25	EZ496506	LN Switch Base	KD-A2208	1
4-26	ES482861	Push Switch UEG-63A	25-5-63	1
4-27	SK487675	Knob C, w/bush	CG-2007	1
4-28	ZW461935	Screw, round head 2.6x4		2
4-29	ZW447772	Tapping Screw #2 3x6(BR)		1

When ordering parts, please describe Parts Number, Serial Number, and Model Number in detail.

FIG. 5 ILLUSTRATION OF MECHANISM ASSEMBLY BLOCK

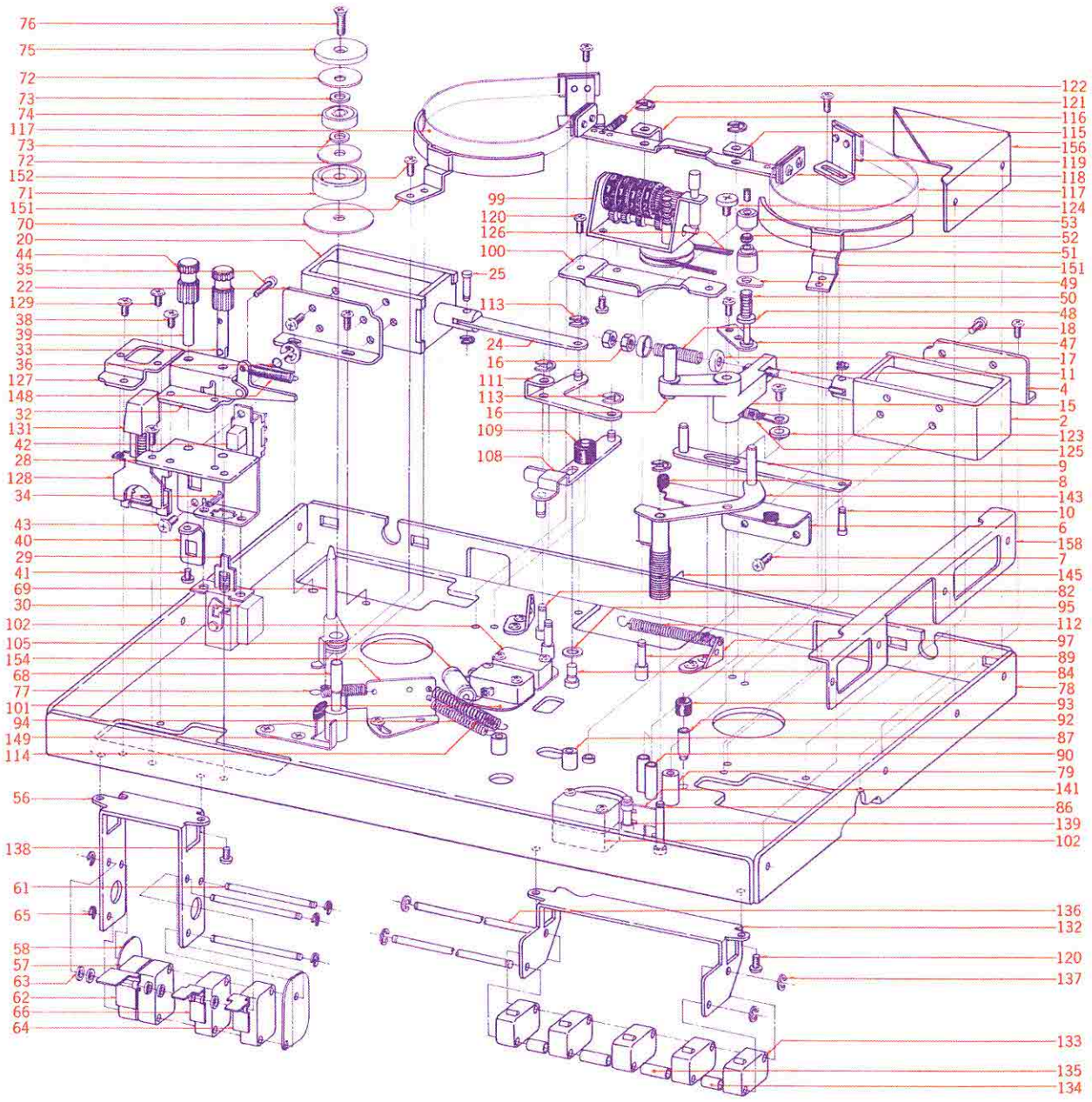

MECHANISM ASSEMBLY BLOCK

Ref. No.	Parts No.	Description	Schematic No.	Q'ty
		PINCH ROLLER PLUNGER BLOCK		
5-1x	BZ428940	Pinch Roller Plunger Block Comp.	KG, KF, KA	1
5-2	EP441990	Plunger Solenoid 1660THTI Solenoid	44-1-45	1
5-3x	ER376424	Spark Quencher U/L 0.1μ+120 500WV	41-1-36	1
5-4	MZ396911	Plunger Bracket	KD-1028	1
5-5x	ZW323728	Screw, binding head 3x5		3
5-6	MZ396922	Black Mask 2	KD-1029	1
5-7	ZW417137	Screw, binding head 3x4		2
5-8	MZ428343	KD Stopper Rubber	KD-1088	2
5-9	MZ396966	Plunger Joint	KD-1033	1
5-10	ZW257477	Connecting Pin	RD-211	1
5-11	MZ396944	Pinch Roller Arm Joint	KD-1031	1
5-12x	ZW270088	'E' Ring 1.9M	6-1-9	1
5-13x	ZW345442	Washer (Nylon)D4.2x9x1t		1
5-14x	ZW270101	'E' Ring 3M	6-1-9	1

Symbol No.	Parts No.	Description	Schematic No.	Q'ty
5-15	MZ396933	Pinch Roller Arm, w/shaft C	KD-1030	1
5-16	ZW273960	M4 Nut		3
5-17	MZ802980	Spring Holder	RD-276	2
5-18	ZG428927	Pinch Roller Spring B	KD-1032	1
		BRAKE PLUNGER BLOCK		
5-19x	BZ398338	Brake Plunger Block Comp.	KD, KF, KH	1
5-20	EP398610	Plunger Solenoid SDC-10-M-C-100V	44-1-36	1
5-21x	ER376424	Spark Quencher U/L 0.1μ+120 500WV	41-1-36	1
5-22	MZ396911	Plunger Bracket	KD-1028	1
5-23x	ZW201835	Screw, binding head 3x5		4
5-24	MZ396977	Brake Plunger Joint	KD-1039	1
5-25	ZW257477	Connecting Pin	RD-211	1
5-26x	ZW270088	'E' Ring 1.9M	6-1-9	1

When ordering parts, please describe Parts Number, Serial Number, and Model Number in detail.

Ref. No.	Parts No.	Description	Schematic No.	Q'ty
		PAUSE & SHUT-OFF SWITCH BLOCK		
5-27x	BS493345	Pause & Shut-off Switch Block Comp.	KG-2	1
5-28	MZ496394	PS Switch Base	KD-A2201	1
5-29	ES524790	Push Switch JH-3A	25-5-79	1
5-30	ER376435	Spark Quencher U/L 0.1μ+120 250WV	41-1-35	1
5-31x	ZW371856	Iso Screw, binding head 3x5		2
5-32	MZ496405	PS Guide, w/lever	KD-A2203	1
5-33	MS496427	Pause Shaft (KG-2)	KD-A2202	1
5-34	ZW314728	Cotter Pin 1.6x8		1
5-35	ZW497733	Screw, round head 2x15		1
5-36	ZG496438	P Spring	KD-A2213	1
5-37x	ZW270123	'E' Ring 4M	6-1-9	1
5-38	ZW467537	Screw, binding head 3x4, w/washer		2
5-39	MS397473	Shut-off Shaft	KD-2038	1
5-40	MZ397484	Shut-off Switch Plate	KD-2039	1
5-41	ZW413155	Screw, binding head 3x6		1
5-42	ES317531	Slide Switch ESD-271DU	25-3-24	1
5-43	ZW323728	Screw, binding head 3x5		2
5-44	SK397596	Pause & Shut-off Knob	KD-2041	2
5-45x	ZW434160	Set Screw, hexagon socket 3x3(cup)		2
		SENSING GUIDE BLOCK		
5-46x	BZ398362	Sensing Guide Block Comp.	KD, KF	1
5-47	MZ396551	Sensing Guide Table, w/prop	KD-2021	1
5-48	MZ396573	Insulator Collar B	KD-2023	1
5-49	MZ397203	Sensing Pole Terminal Plate	KD-2032	1
5-50	ZG396516	Tape Guide Adjust Spring	KD-2024	1
5-51	MZ396527	Sensing Guide B	KD-2025	1
5-52	MZ397214	Insulator Liner A	KD-2031	1
5-53	MZ397192	Sensing Guide A	KD-2026	1
5-54x	ZW433001	Set Screw, hexagon socket 3x5(cup)		1
		SPEED CHANGE SWITCH BLOCK		
5-55x	BS423865	Speed Change Switch Block Comp.	KG, KA	1
5-56	MZ397350	Speed Change Switch Stand	KD-2013	1
5-57	ES250064	Micro Switch V-1A44 U/L	25-1-7	3
5-58	MZ402377	Micro Insulator D	KD-2050	2
5-59x	EZ515158	Micro Insulator E	KD-2050	2
5-60x	ZW273778	M3 Earth Lug		1
5-61	MS397372	Switch Lever Shaft	KD-2015	3
5-62	ML397383	Speed Change Switch Lever 2	KD-2016	1
5-63	ZW424495	Washer (SPC)D3.1x8x1t		4
5-64	ML403503	Speed Change Switch Lever B	KD-2056B	1
5-65	ZW270088	'E' Ring 1.9M	6-1-9	6
5-66	ML403492	Speed Change Switch Lever A	KD-2056A	1
		GUIDE ROLLER BLOCK		
5-67x	BZ434992	Guide Roller Block Comp.	KD, KF	1
5-68	MS432358	Guide Roller Shaft	KD-A2002	1
5-69	MZ432832	Tension Arm, w/pulley	KD-A2003	1
5-70	MZ434316	Roller Mask	KD-A2005	1
5-71	MZ434970	Tape Guide Table A	KD-A2006	1
5-72	ZW231805	Tape Guide Washer (large)	3A-356	2
5-73	ZW317171	Washer (PBP)D3.1x8x0.1t		2
5-74	MV248117	Bearing 635AHZZ-CIE-B32		1
5-75	MZ434981	Tape Guide Table B	KD-A2007	1
5-76	ZW411660	Screw, oval countersunk head 3x6		1
5-77	ZG317114	Tension Lever Spring	MR-39	1
		ASSEMBLY BLOCK		
5-78	MZ396990	Mech. Frame	KD-1001	1
5-79	MS397001	Pinch Roller Arm Shaft	KD-1002	1
5-80x	ZW274026	M5 Spring Washer		1
5-81x	ZW413278	M5 Nut		1
5-82	MS397012	Brake Lever Shaft	KD-1003	1
5-83x	ZW413188	M4 Nut		2
5-84	MS465480	Brake Lever Shaft B	KD-1093	1

Ref. No.	Parts No.	Description	Schematic No.	Q'ty
5-85x	ZW516611	M3 Nut		1
5-86	MS397023	Tension Arm Shaft	KD-1004	1
5-87	HZ397034	Head Base Support	KD-1005	4
5-88x	ZW416687	Screw, binding head 4x8		4
5-89	MZ317373	Brake Lever Prop	MR-102	2
5-90	MZ397168	Sensing Table Prop	KD-1062	2
5-91x	ZW413741	Screw, binding head 3x8		6
5-92	MS217192	Cam Roller Shaft A	900-130	1
5-93	MZ428343	KD Stopper Rubber	KD-1088	2
5-94	ZG433383	Shifter Spring B	KD-A1008	1
5-95	ZW420682	Washer (Nylon)D4.2x9x0.5t		1
5-96x	MZ397045	Sys. Con. Connector Prop	KD-1006	4
5-97	MZ397080	Spring Hanger	KD-1010	2
5-98x	ZW323728	Screw, binding head 3x5		22
5-99	MC399521	Counter M-470D, w/base	9-1-14	1
5-100	MZ397078	Counter Base	KD-1009	1
5-101	MZ250413	Micro Insulator C	RC-127	2
5-102	ES250064	Micro Switch V-1A44 U/L	25-1-7	4
5-103x	ZW439514	Screw, binding head 3x18		2
5-104x	ZW397146	Micro Switch Nut	KD-1057	1
5-105	EC273464	MP/C. 0.1μF(M) 350WVDC (Tub. type)	24-9-4	1
5-106x	ZW422965	Screw, pan head 3x15		2
5-107x	ZW414066	Screw, binding head 3x25		2
5-108	MZ396832	Brake Slide, w/pins	KD-1044	1
5-109	MZ397181	Lever Cushion	KD-1069	1
5-110x	ZW270101	"E' Ring 3M	6-1-9	1
5-111	ML396742	Brake Lever, w/pin	KD-1041	1
5-112	ZG465478	Brake Lever Spring	KD-1092	1
5-113	ZW290283	'U' Ring 2.85M	6-1-1	4
5-114	ZG407575	Shifter Lever Spring	KD-1078	1
5-115	ML314976	Brake Lever A	MR-210	1
5-116	ML396810	Brake Lever B	KD-1038	1
5-117	MB314987	Brake Band	MR-213	2
5-118	MZ314998	Brake Band Retaining Plate	MR-212	4
5-119	MZ315000	Brake Band Support	MR-214	2
5-120	ZW323728	Screw, binding head 3x5		12
5-121	ZW290283	'U' Ring 2.85M	6-1-1	2
5-122	ZG315011	Brake Lever Spring	MR-116	1
5-123	ZW397157	Graduated Washer	KD-1036	1
5-124	ZW243516	Screw, Pinch Roller	XR-140	1
5-125	ZG208091	Impedance Arm Spring	RD-269	1
5-126	MB303535	Counter Belt D91x1.6	3A-617	1
5-127	MZ397394	Power Switch Table	KD-2028	1
5-128	ES246025	Push Switch UEH-12BP U/L	25-5-11	1
5-129	ZW371856	Iso Screw, binding head 3x5		2
5-130x	MZ396988	Camoflage Cloth B	KD-1022	1
5-131	SK210521	Push Button Switch Knob	RD-506	1
5-132	MZ397315	Operation Switch Base	KD-2003	1
5-133	ES250075	Micro Switch V-1A10 U/L	25-1-8	5
5-134	MZ397337	Switch Spacer A	KD-2005	2
5-135	MZ397348	Switch Spacer B	KD-2006	2
5-136	MS250165	Micro Switch Shaft B	RD-122B	2
5-137	ZW270088	'E' Ring 1.9M	6-1-9	4
5-138	ZW417137	Screw, binding head 3x4		2
5-139	MS408497	Switch Lever Shaft	KD-1080	1
5-140x	ZW273756	M3 Nut		1
5-141	ML409083	Micro Switch Lever	KD-1081	2
5-142x	ZW259683	Washer (Nylon)D3x5x1t		1
5-143	ML396900	Shut-off Lever	KD-1052	1
5-144x	ZW290283	'U' Ring 2.85M	6-1-1	1
5-145	ZG409015	Tension Arm Spring C	KD-1079	1
5-146x	ZW273881	M4 Earth Lug		1
5-147x	ZG232121	Tension Lever Spring	MH-143	1
5-148	ZG366761	Spring, Slider D	RCC-1209	1
5-149	MZ433721	Stopper	KD-A1006	1
5-150x	EJ331380	Lug Plate KP1L1	33-3-16	1
5-151	MZ317406	Brake Band Guide, w/table	MR-120	2
5-152	ZW323728	Screw, binding head 3x5		4
5-153x	MP424023	Pinch Roller (KD)	KD-1084	1
5-154	MZ434237	KD Spring Hanger	KD-A1007	1
5-155x	SZ397517	Corner Angle A (left)	KD-6003	1
5-156	SZ397528	Corner Angle B (right)	KD-6003	1
5-157x	SZ397530	Side Angle A (left)	KD-6004	1
5-158	SZ397541	Side Angle B (right)	KD-6004	1

When ordering parts, please describe Parts Number, Serial Number, and Model Number in detail.

FIG. 6 PHOTO OF REC. DOLBY P.C. BOARD (KD-A5214)

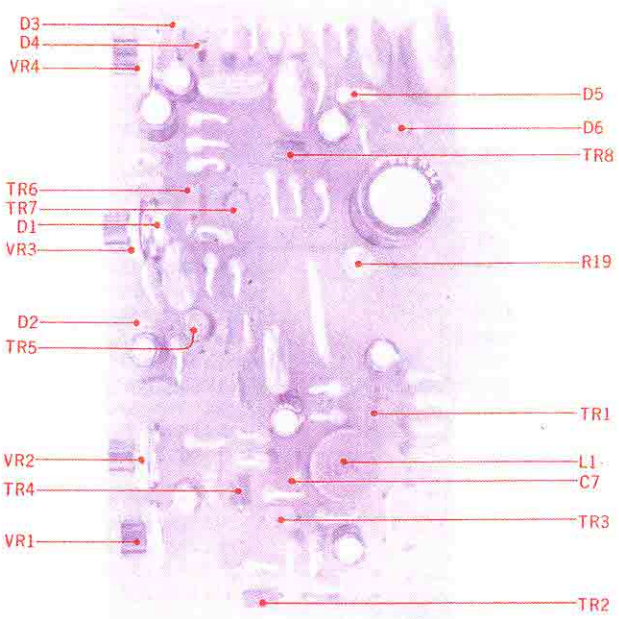

REC. DOLBY P.C. BOARD (KD-A5214) BLOCK

Symbol No.	Parts No.	Description	Q'ty
6-1x	BA493481	Rec. Dolby P.C. Board Comp. (KD-A5214)	1
6-TR1, 2	ET234854	Transistor 2SC458LG(C)	2
6-TR3	ET350335	Transistor 2SA564(Q)	1
6-TR4	ET352146	Transistor 2SC458LG(D)	1
6-TR5	ET491051	FET 2SK30 GR	1
6-TR6	ET234854	Transistor 2SC458LG(C)	1
6-TR7	ET350335	Transistor 2SA564(Q)	1
6-TR8	ET352146	Transistor 2SC458LG(D)	1
6-D1	ED219464	Germanium Diode 1N34A	1
6-D2	ED491130	Zener Diode WZ085	1
6-D3, 4	ED487484	Silicon Diode 1BA-459	2
6-D5	ED219464	Germanium Diode 1N34A	1
6-D6	ED487484	Silicon Diode 1BA-459	1
6-L1	EO496350	Inductor 146LY 36MH(J)	1
6-VR1, 2	EV497698	Semi-fixed Volume V10K8-1-5 20k B(4US)	2
6-VR3	EV497700	Semi-fixed Volume V10K8-1-5 5k B(4US)	1
6-VR4	EV497711	Semi-fixed Volume V10k8-1-5 500 B	1
6-TP1	EJ363126	P.C. Board Terminal	1
		Capacitor, Vertical Type	
6-C1	EC320051	Elect. 10μF 16WV	1
6-C4	EC424708	Mylar 0.0018μF(J) 50WV	1
6-C5, 6	EC320051	Elect. 10μF 16WV	2
6-C7	EC486584	Tantalum 1μF(M) 35WV(DT type)	1
6-C8	EC251291	Mylar 0.1μF(K) 50WV	1
6-C9	EC320051	Elect. 10μF 16WV	1
6-C10	EC313121	Elect. 220μF 25WV	1
6-C11	EC329883	Mylar 0.0056μF(J) 50WV	1
6-C12	EC329861	Mylar 0.027μF(J) 50WV	1
6-C13	EC337500	Mylar 0.0047μF(J) 50WV	1
6-C14	EC320051	Elect. 10μF 16WV	1
6-C15	EC251291	Mylar 0.1μF(K) 50WV	1
6-C16	EC493637	Elect. 47μF 10WV	1
6-C17	EC320051	Elect. 10μF 16WV	1
6-C18	EC251291	Mylar 0.1μF(K) 50WV	1
6-C19	EC379170	Mylar 0.1μF(J) 50WV	1
6-C20	EC320051	Elect. 10μF 16WV	1
6-C21	EC251291	Mylar 0.1μF(K) 50WV	1
6-C22	EC395504	Mylar 0.33μF(K) 50WV	1

Symbol No.	Parts No.	Description	Q'ty
		Resistor, Stopper Type	
6-R1	ER336442	Carbon RD1/4 10k(J)	1
6-R2	ER306843	Carbon RD1/4 1.2k(J)	1
6-R3	ER429996	Carbon RD1/4 470k(J)	1
6-R4	ER346601	Carbon RD1/4 47k(J)	1
6-R5	ER212477	Carbon RD1/4 3.3k(J)	1
6-R6	ER304402	Carbon RD1/4 470(J)	1
6-R7	ER357535	Carbon RD1/4 39k(J)	1
6-R8	ER306360	Carbon RD1/4 6.8k(J)	1
6-R9	ER211667	Carbon RD1/4 100(J)	1
6-R10	ER357456	Carbon RD1/4 2.2k(J)	1
6-R11	ER433877	Carbon RD1/4 120(J)	1
6-R12	ER363644	Carbon RD1/4 560(J)	1
6-R13	ER349907	Carbon RD1/4 33k(J)	1
6-R14	ER357570	Carbon RD1/4 150k(J)	1
6-R15	ER212174	Carbon RD1/4 180k(J)	1
6-R16	ER212264	Carbon RD1/4 22k(J)	1
6-R17	ER212174	Carbon RD1/4 180k(J)	1
6-R18	ER212477	Carbon RD1/4 3.3k(J)	1
6-R19	ER496337	Metal Oxide Film 1W 470(J)	1
6-R20	ER357535	Carbon RD1/4 39k(J)	1
6-R21	ER212477	Carbon RD1/4 3.3k(J)	1
6-R22	ER357456	Carbon RD1/4 2.2k(J)	1
6-R23	ER349942	Carbon RD1/4 8.2k(J)	1
6-R24	ER306843	Carbon RD1/4 1.2k(J)	1
6-R25	ER430097	Carbon RD1/4 680k(J)	1
6-R26	ER306887	Carbon RD1/4 15k(J)	1
6-R27	ER349942	Carbon RD1/4 8.2k(J)	1
6-R28	ER336442	Carbon RD1/4 10k(J)	1
6-R29,30	ER349942	Carbon RD1/4 8.2k(J)	2
6-R31	ER349907	Carbon RD1/4 33k(J)	1
6-R32	ER450011	Carbon RD1/4 120k(J)	1
6-R33	ER346601	Carbon RD1/4 47k(J)	1
6-R34	ER343078	Carbon RD1/4 2.7k(J)	1
6-R35	ER361642	Carbon RD1/4 47(J)	1
6-R36	ER211465	Carbon RD1/4 1k(J)	1
6-R37	ER380913	Carbon RD1/4 33(J)	1
6-R38	ER306887	Carbon RD1/4 15k(J)	1
6-R39,40	ER426857	Carbon RD1/4 270k(J)	2
6-R41	ER380711	Carbon RD1/4 220k(J)	1

When ordering parts, please describe Parts Number, Serial Number, and Model Number in detail.

Dolby is a tradmark of Dolby Laborations, Inc. Under License from Dolby Laboratories, Inc.

FIG. 7 PHOTO OF P.B. DOLBY P.C. BOARD (KD-A5213)

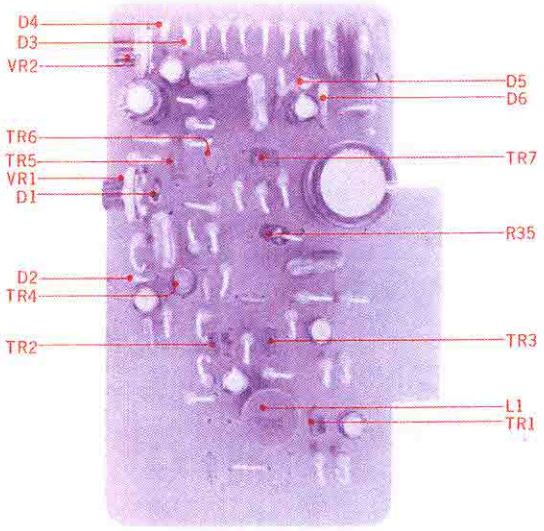

P.B. DOLBY P.C. BOARD (KD-A5213) BLOCK

Symbol No.	Parts No.	Description	Q'ty
7-1x	BA493503	P.B. Dolby P.C. Board Comp. (KD-A5213)	1
7-TR1	ET234854	Transistor 2SC458LG(C)	1
7-TR2	ET352146	Transistor 2SC458LG(D)	1
7-TR3	ET329218	Transistor 2SC458(C)	1
7-TR4	ET491051	FET 2SK30 GR	1
7-TR5	ET234854	Transistor 2SC458LG(C)	1
7-TR6	ET350335	Transistor 2SA564(Q)	1
7-TR7	ET352146	Transistor 2SC458LG(D)	1
7-D1	ED219464	Germanium Diode 1N34A	1
7-D2	ED491130	Zener Diode WZO85	1
7-D3, 4	ED487484	Silicon Diode 1BA-459	2
7-D5	ED219464	Germanium Diode 1N34A	1
7-D6	ED487484	Silicon Diode 1BA-459	1
7-L1	EO496350	Inductor 146LY 36MH(J)	1
7-VR1	EV497700	Semi-fixed Volume V10K8-1-5 5k B(4US)	1
7-VR2	EV497711	Semi-fixed Volume V10K8-1-5 500 B	1
7-TP1	EJ363126	P.C. Board Terminal	1
		Capacitor, Vertical Type	
7-C1	EC320051	Elect. 10μF 16WV	1
7-C4	EC389474	Mylar 0.0015μF(J) 50WV	1
7-C5	EC331828	Elect. 3.3μF 25WV	1
7-C6	EC251291	Mylar 0.1μF(K) 50WV	1
7-C7	EC320051	Elect. 10μF 16WV	1
7-C8	EC329883	Mylar 0.0056μF(J) 50WV	1
7-C9	EC329861	Mylar 0.027μF(J) 50WV	1
7-C10	EC337500	Mylar 0.0047μF(J) 50WV	1
7-C11	EC320051	Elect. 10μF 16WV	1
7-C12	EC251291	Mylar 0.1μF(K) 50WV	1
7-C13	EC320040	Elect. 47μF 16WV	1
7-C14	EC320051	Elect. 10μF 16WV	1
7-C15	EC251291	Mylar 0.1μF(K) 50WV	1
7-C16	EC379170	Mylar 0.1μF(J) 50WV	1
7-C17	EC320051	Elect. 10μF 16WV	1
7-C18	EC251291	Mylar 0.1μF(K) 50WV	1
7-C19	EC395504	Mylar 0.33μF(K) 50WV	1
7-C20	EC336148	Elect. 1000μF 16WV	1
		Resistor, Stopper Type	
7-R1	ER429996	Carbon RD1/4 470k(J)	1
7-R2	ER357570	Carbon RD1/4 150k(J)	1
7-R3	ER343078	Carbon RD1/4 2.7k(J)	1
7-R4	ER213467	Carbon RD1/4 820(J)	1
7-R5	ER306360	Carbon RD1/4 6.8k(J)	1
7-R6	ER342933	Carbon RD1/4 27k(J)	1
7-R7	ER426857	Carbon RD1/4 270k(J)	1
7-R8	ER336442	Carbon RD1/4 10k(J)	1
7-R9	ER426857	Carbon RD1/4 270k(J)	1
7-R10	ER213300	Carbon RD1/4 680(J)	1
7-R11	ER342933	Carbon RD1/4 27k(J)	1
7-R12	ER212477	Carbon RD1/4 3.3k(J)	1
7-R13	ER357535	Carbon RD1/4 39k(J)	1
7-R14	ER212477	Carbon RD1/4 3.3k(J)	1
7-R15	ER357456	Carbon RD1/4 2.2k(J)	1
7-R16	ER349942	Carbon RD1/4 8.2k(J)	1
7-R17	ER306843	Carbon RD1/4 1.2k(J)	1
7-R18	ER430097	Carbon RD1/4 680k(J)	1
7-R19	ER306887	Carbon RD1/4 15k(J)	1
7-R20	ER349942	Carbon RD1/4 8.2k(J)	1
7-R21	ER336442	Carbon RD1/4 10k(J)	1
7-R22,23	ER349942	Carbon RD1/4 8.2k(J)	2
7-R24	ER349907	Carbon RD1/4 33k(J)	1
7-R25	ER450011	Carbon RD1/4 120k(J)	1
7-R26	ER346601	Carbon RD1/4 47k(J)	1
7-R27	ER343078	Carbon RD1/4 2.7k(J)	1
7-R28	ER361642	Carbon RD1/4 47(J)	1
7-R29	ER211465	Carbon RD1/4 1k(J)	1
7-R30	ER380913	Carbon RD1/4 33(J)	1
7-R31	ER306887	Carbon RD1/4 15k(J)	1
7-R32,33	ER426857	Carbon RD1/4 270k(J)	2
7-R34	ER380711	Carbon RD1/4 220k(J)	1
7-R35	ER496337	Metal Oxide Film 1W 470(J)	1

When ordering parts, please describe Parts Number, Serial Number, and Model Number in detail.

FIG. 8 PHOTO OF REC. AMP. P.C. BOARD (KD-A5207)

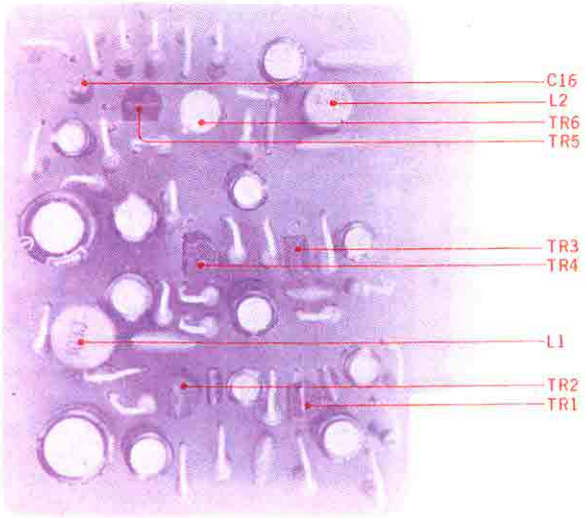

REC. AMP. P.C. BOARD (KD-A5207) BLOCK

Symbol No.	Parts No.	Description	Q'ty
8-1x	BA493446	Rec. Amp. P.C. Board Comp. (KD-A5207)	1
8-TR1, 2	ET398845	Transistor 2SC871(E) (F)	2
8-TR3	ET234843	Transistor 2SC458LG(B) (C)	1
8-TR4	ET379462	Transistor 2SC711(D) (E)	1
8-TR5	ET379462	Transistor 2SC711(D) (E)	1
8-TR6	ET338894	Transistor 2SC968(3)	1
8-L1	EO244001	Ferri Inductor FL9H 10MH(J)	1
8-L2	EO321254	Ferri Inductor FL7H 5.6MH(J)	1
		Capacitor, Vertical Type	
8-C1	EC320051	Elect. 10μF 16WV	1
8-C2	EC250604	Mylar 0.001μF(K) 50WV	1
8-C3	EC399690	VFM 33PF(J) 50WV	1
8-C4	EC329771	Elect. 47μF 6.3WV	1
8-C5	EC320051	Elect. 10μF 16WV	1
8-C6	EC329771	Elect. 47μF 6.3WV	1
8-C7	EC220678	Elect. 47μF 25WV	1
8-C8	EC320051	Elect. 10μF 16WV	1
8-C9	EC290531	VFM 100PF(K) 50WV	1
8-C10	EC329771	Elect. 47μF 6.3WV	1
8-C11	EC220994	Elect. 10μF 25WV	1
8-C12	EC329771	Elect. 47μF 6.3WV	1
8-C13	EC290531	VFM 100PF(K) 50WV	1
8-C14	EC290564	VFM 220PF(K) 50WV	1
8-C15	EC320051	Elect. 10μF 16WV	1
8-C16	EC486584	Tantalum 1μF(M) 35WV(DT type)	1
8-C17	EC320051	Elect. 10μF 16WV	1
8-C18	EC390633	Mylar 0.0027μF(K) 50WV	1
8-C19	EC220994	Elect. 10μF 25WV	1
8-C20,21	EC423562	VFM 470PF(J) 50WV	2
8-C22	EC220678	Elect. 47μF 25WV	1

Symbol No.	Parts No.	Description	Q'ty
		Resistor, Stopper Type	
8-R1	ER336442	Carbon RD1/4 10k(J)	1
8-R2	ER362485	Carbon RD1/4 330k(J)	1
8-R3	ER336442	Carbon RD1/4 10k(J)	1
8-R4	ER357570	Carbon RD1/4 150k(J)	1
8-R5	ER304402	Carbon RD1/4 470(J)	1
8-R6	ER346994	Carbon RD1/4 18k(J)	1
8-R7	ER306360	Carbon RD1/4 6.8k(J)	1
8-R8	ER357456	Carbon RD1/4 2.2k(J)	1
8-R9	ER336442	Carbon RD1/4 10k(J)	1
8-R10	ER212883	Carbon RD1/4 4 7k(J)	1
8-R11	ER211465	Carbon RD1/4 1k(J)	1
8-R12	ER450011	Carbon RD1/4 120k(J)	1
8-R13	ER349942	Carbon RD1/4 8.2k(J)	1
8-R14	ER211757	Carbon RD1/4 100k(J)	1
8-R15	ER212883	Carbon RD1/4 4.7k(J)	1
8-R16	ER362441	Carbon RD1/4 1.8k(J)	1
8-R17	ER213300	Carbon RD1/4 680(J)	1
8-R18	ER212264	Carbon RD1/4 22k(J)	1
8-R19	ER336442	Carbon RD1/4 10k(J)	1
8-R20	ER346544	Carbon RD1/4 3k(J)	1
8-R21	ER496214	Carbon RD1/4 360k(J)	1
8-R22	ER349907	Carbon RD1/4 33k(J)	1
8-R23	ER212883	Carbon RD1/4 4.7k(J)	1
8-R24	ER212264	Carbon RD1/4 22k(J)	1
8-R25	ER349784	Carbon RD1/4 390(J)	1
8-R26	ER212883	Carbon RD1/4 4.7k(J)	1
8-R27	ER211858	Carbon RD1/4 12k(J)	1
8-R28	ER352045	Carbon RD1/4 3.9k(J)	1
8-R29	ER211465	Carbon RD1/4 1k(J)	1
8-R30	ER349784	Carbon RD1/4 390(J)	1

When ordering parts, please describe Parts Number, Serial Number, and Model Number in detail.

FIG. 9 PHOTO OF P.B. AMP. P.C. BOARD (KD-A5208)

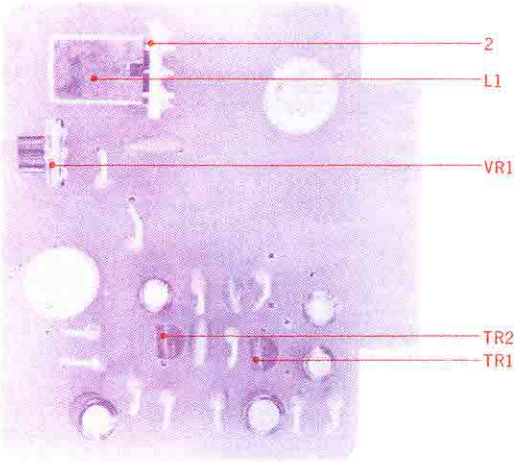

P.B. AMP. P.C. BOARD (KD-A5208) BLOCK

Symbol No.	Parts No.	Description	Q'ty
9-1x	BA493457	P.B. Amp. P.C. Board Comp. (KD-A5208)	1
9-TR1, 2	ET234854	Transistor 2SC458LG(C)	2
9-VR1	EV497687	Semi-fixed Volume V10K8-1-5 50k B(4US)	1
9-L1	EO262484	DM Coil 10MH	1
9-2	EA496258	Inductor P.C. Board	1
		Capacitor, Vertical Type	
9-C1	EC320051	Elect. 10μF 16WV	1
9-C2	EC329771	Elect. 47μF 6.3WV	1
9-C3	EC290520	VFM 100PF(J) 50WV	1
9-C4, 5	EC320051	Elect. 10μF 16WV	2
9-C6	EC329771	Elect. 47μF 6.3WV	1
9-C7	EC250841	Mylar 0.01μF(J) 50WV	1
9-C8	EC329850	VFM 220PF(J) 50WV	1
9-C9, 10	EC220678	Elect. 47μF 25WV	2
		Resistor, Stopper Type	
9-R1	ER362485	Carbon RD1/4 330k(J)	1
9-R2	ER357570	Carbon RD1/4 150k(J)	1
9-R3	ER362485	Carbon RD1/4 330k(J)	1
9-R4	ER336442	Carbon RD1/4 10k(J)	1
9-R5	ER212681	Carbon RD1/4 330(J)	1
9-R6	ER212264	Carbon RD1/4 22k(J)	1
9-R7	ER212477	Carbon RD1/4 3.3k(J)	1
9-R8	ER212883	Carbon RD1/4 4.7k(J)	1
9-R9	ER211858	Carbon RD1/4 12k(J)	1
9-R10	ER380711	Carbon RD1/4 220k(J)	1
9-R11	ER212883	Carbon RD1/4 4.7k(J)	1
9-R12	ER212264	Carbon RD1/4 22k(J)	1

SERVO P.C. BOARD (KD-1096) BLOCK

Symbol No.	Parts No.	Description	Q'ty
10-1x	BA499601	Servo P.C. Board Comp. (KD-1096)	1
10-TR201	ET379462	Transistor 2SC711(D) (E)	1
10-TR202	ET356984	Transistor 2SA564(R)	1
10-TR203, 4	ET379462	Transistor 2SC711(D) (E)	2
10-TR205	ET356984	Transistor 2SA564(R)	1
10-TR206	ET398777	Transistor 2SC711(G) (F)	1
10-TR207	ET379462	Transistor 2SC711(D) (E)	1
10-TR208	ET399936	Transistor 2SC945(R) (S)	1
10-TR209	ET403042	Transistor 2SD234(Y)	1
10-TR251	ET393581	Transistor 2SC1014(D) (E)	1
10-TR252	ET403042	Transistor 2SD234(Y)	1
10-TR253	ET391138	Transistor 2SC968(3) (4)	1
10-TH201	ED321390	Thermister 41D26	1
10-D201, 2	ED224526	Silicon Diode 10D1	2
10-D204	ED224526	Silicon Diode 10D1	1
10-D251	ED329130	Silicon Diode 10DC-1(black)	1
10-D252	ED329128	Silicon Diode 10DC-1(red)	1
10-D253	ED384096	Zener Diode RD-9A	1
10-VR202	EV499364	Semi-fixed Volume V10K8-4-2 5k B	1
10-VR251	EV398834	Semi-fixed Volume V10K5-2-4 1k B	1
10-2	EZ407586	Heat-sink Plate B	1
10-3	ZW392940	Insulator Washer 1 G-473025-1	2
10-4	ZW421806	Screw, pan head 3x8	2
10-5	ZW273756	M3 Nut	4
10-6	EZ405213	Heat-sink Plate	1
10-7	ZW200687	Tapping Screw #2 3x6 (round)	2
10-8	ZW413741	Screw, binding head 3x8	2
10-9x	ZW273802	M3 Toothed Lock Washer	1
10-10	EZ380428	F3 Type Pin	2
10-11	EZ397721	Servo P.C. Board Retaining Plate	1
10-12x	EZ397743	P.C. Board Prop	4
10-13	ZW413155	Screw, binding head 3x6	3
10-14	EZ397732	Bracket	1
10-15x	ZW417025	Screw, binding head 3x8, w/washer	1
10-16x	ZW273778	M3 Earth Lug	1
10-17x	ZW413728	Screw, binding head 3x6, w/washer	4

When ordering parts, please describe Parts Number, Serial Number, and Model Number in detail.

FIG. 10 PHOTO OF SERVO P.C. BOARD (KD-1096)

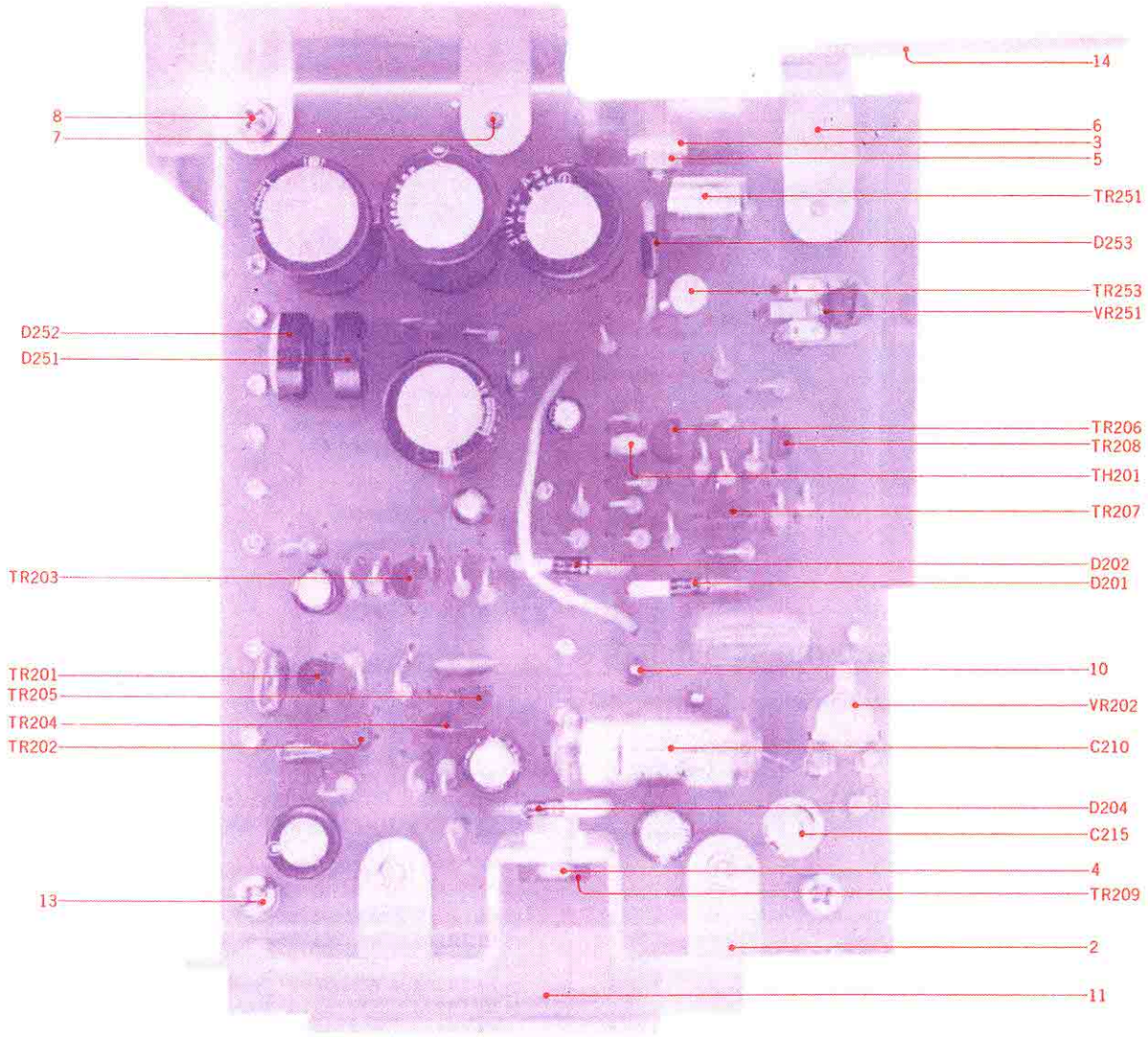

Symbol No.	Parts No.	Description	Q'ty
		Capacitor, Vertical Type	
10-C201	EC398957	Mylar 0.1μF(M) 50WV	1
10-C202	EC251190	Mylar 0.056μF(K) 50WV	1
10-C203	EC331705	Elect. 22μF 16WV	1
10-C204	EC379787	Mylar 0.0039μF(J) 50WV	1
10-C205	EC320051	Elect. 10μF 16WV	1
10-C206	EC250661	Mylar 0.0015μF(K) 50WV	1
10-C207	EC220151	Elect. 100μF 25WV	1
10-C208	EC350684	Elect. 22μF 25WV	1
10-C209	EC329850	VFM 220PF(J) 50WV	1
10-C210	EC424080	Styrol 0.051μF(F) 50WV (Tubular type)	1
10-C211	EC438524	Mylar 0.27μF(H) 100WV	1
10-C213	EC220432	Elect. 2.2μF 25WV	1
10-C215	EC517116	Tantalum 33μF(M) 10WV (DTS type)	1
10-C251, 52	EC403468	Elect. 330μF 50WV	2
10-C253	EC372148	Elect. 220μF 35WV	1
10-C254	EC331817	Elect. 470μF 25WV	1
10-C255	EC350684	Elect. 22μF 25WV	1
10-C256	EC250918	Mylar 0.01μF(M) 50WV	1
		Resistor, Stopper Type	
10-R201	ER336442	Carbon RD1/4 10k(J)	1
10-R202	ER362441	Carbon RD1/4 1.8k(J)	1
10-R203	ER357456	Carbon RD1/4 2.2k(J)	1

Symbol No.	Parts No.	Description	Q'ty
10-R204	ER212264	Carbon RD1/4 22k(J)	1
10-R205,6,7	ER336442	Carbon RD1/4 10k(J)	3
10-R208	ER361642	Carbon RD1/4 47(J)	1
10-R209	ER211757	Carbon RD1/4 100k(J)	1
10-R210	ER357456	Carbon RD1/4 2.2k(J)	1
10-R211	ER212016	Carbon RD1/4 150(J)	1
10-R212	ER403187	Carbon RD1/4 10k(F)	1
10-R213	ER403097	Carbon RD1/4P 9.1k F	1
10-R214	ER212883	Carbon RD1/4 4.7k(J)	1
10-R217	ER306887	Carbron RD1/4 15k(J)	1
10-R218	ER212883	Carbon RD1/4 4.7k(J)	1
10-R219	ER357456	Carbon RD1/4 2.2k(J)	1
10-R220	ER211667	Carbon RD1/4 100(J)	1
10-R221	ER213030	Carbon RD1/4 5.6k(J)	1
10-R222, 23	ER357456	Carbon RD1/4 2.2k(J)	2
10-R224, 25	ER211465	Carbon RD1/4 1k(J)	2
10-R226	ER304290	Carbon RD1/4 10(J)	1
10-R227	ER306887	Carbon RD1/4 15k(J)	1
10-R228	ER424078	Carbon RD1/4 51(J)	1
10-R251	ER357456	Carbon RD1/4 2.2k(J)	1
10-R252	ER212681	Carbon RD1/4 330(J)	1
10-R253	ER343078	Carbon RD1/4 2.7k(J)	1
10-R254	ER357456	Carbon RD1/4 2.2k(J)	1
10-R255	ER306843	Carbon RD1/4 1.2k(J)	1
10-R256	ER498003	Carbon RD1/2 18(J)	1

When ordering parts, please describe Parts Number, Serial Number, and Model Number in detail.

FIG. 11 PHOTO OF SYS. CON. P.C. BOARD (KD-A1001A)

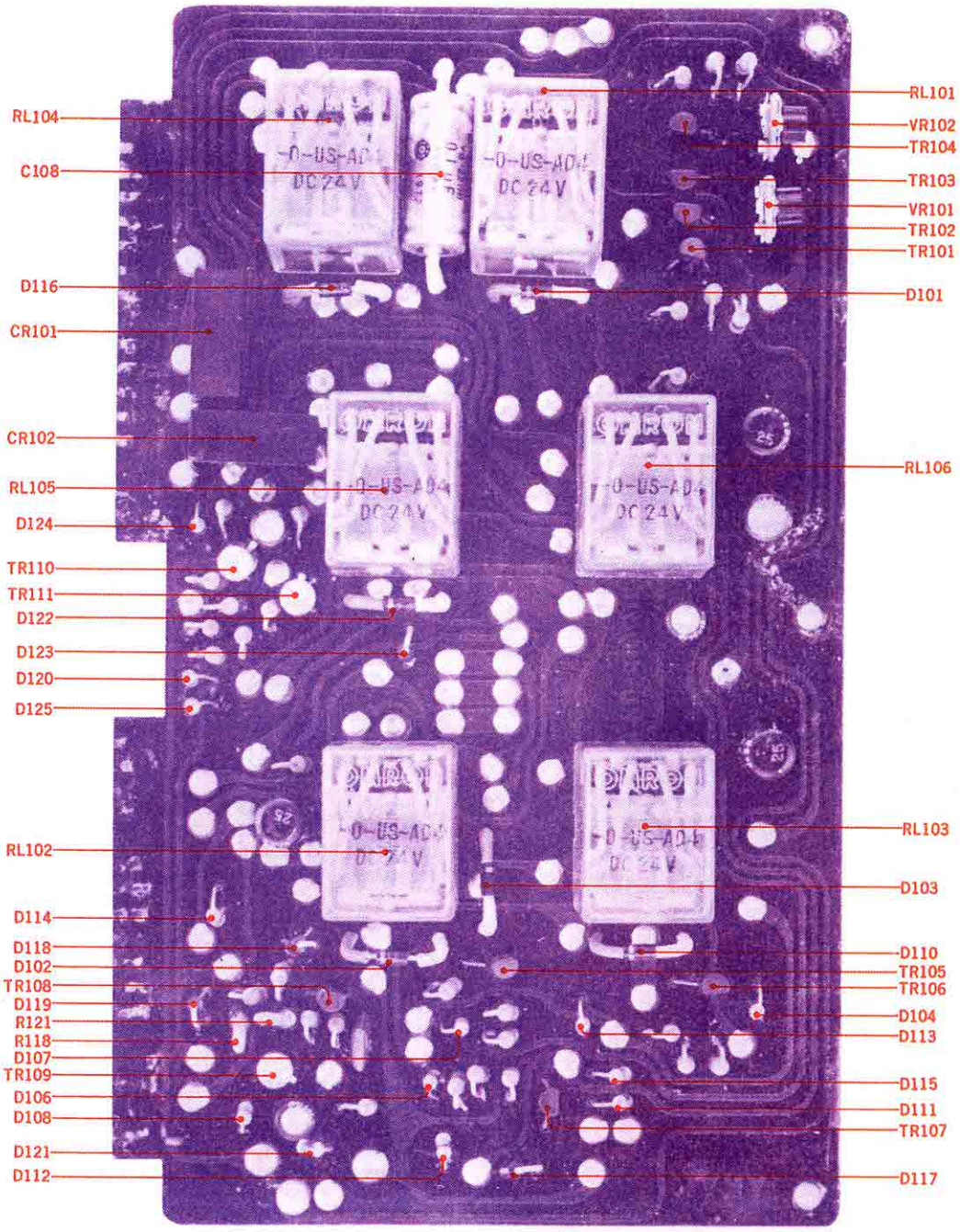

SYS. CON. P.C. BOARD (KD-A1001A) BLOCK

Symbol No.	Parts No.	Description	Q'ty
11-1x	BA426284	Sys. Con. P.C. Board Comp. (KD-A100aA)	1
11-TR101 to 8	ET398711	Transistor 2SC945(Q) (R)	8
11-TR109 to 11	ET338894	Transistor 2SC968(3)	3
11-D101 to 3	ED224526	Silicon Diode 10D1	3
11-D104	ED219464	Germanium Diode 1N34A	1
11-D106 to 8	ED219464	Germanium Diode 1N34A	3
11-D110	ED224526	Silicon Diode 10D1	1
11-D111 to 15	ED219464	Germanium Diode 1N34A	5
11-D116 to 19	ED224526	Silicon Diode 10D1	2
11-D120, 21	ED219464	Germanium Diode 1N34A	2
11-D122	ED224526	Silicon Diode 10D1	1
11-D123	ED224550	Silicon Diode 10D4	1
11-D124, 25	ED219464	Germanium Diode 1N34A	2
11-D126	ED224526	Silicon Diode 10D1	1
11-RL101 to 6	EP344136	Relay MY4-O-US-AD4-24V	6
11-CR101, 2	ER376424	Spark Quencher U/L 0.1μ+120 500WV	2
11-VR101	EV426936	Semi-fixed Volume V10K-5 30k B	1
11-VR102	EV221826	Semi-fixed Volume V10K-5 10k B	1
		Capacitor, Vertical Type	
11-C101, 2	EC456041	Elect. 33μF 25WV	2
11-C103	EC220612	Elect. 33μF 25WV	1
11-C104	EC308711	Mylar 0.047μF(K) 50WV	1
11-C105, 6, 7	EC220994	Elect. 10μF 25WV	3

When ordering parts, please describe Parts Number, Serial Number, and Model Number in detail.

Symbol No.	Parts No.	Description	Q'ty
11-C108	EC273464	MP 0.1μF(M) 350WVDC (Tubular type)	1
11-C109	EC220612	Elect. 33μF 25WV	1
11-C110	EC220994	Elect. 10μF 25WV	1
		Resistor, Stopper Type	
11-R101	ER211465	Carbon RD1/4 1k(J)	1
11-R102	ER362485	Carbon RD1/4 330k(J)	1
11-R103	ER336442	Carbon RD1/4 10k(J)	1
11-R104, 5	ER212883	Carbon RD1/4 4.7k(J)	2
11-R106	ER362485	Carbon RD1/4 330k(J)	1
11-R107	ER212883	Carbon RD1/4 4.7k(J)	1
11-R108	ER211465	Carbon RD1/4 1k(J)	1
11-R109	ER212883	Carbon RD1/4 4.7k(J)	1
11-R110	ER357456	Carbon RD1/4 2.2k(J)	1
11-R111	ER343078	Carbon RD1/4 2.7k(J)	1
11-R112	ER212883	Carbon RD1/4 4.7k(J)	1
11-R113	ER357456	Carbon RD1/4 2.2k(J)	1
11-R114	ER343078	Carbon RD1/4 2.7k(J)	1
11-R115	ER212883	Carbon RD1/4 4.7k(J)	1
11-R116	ER357456	Carbon RD1/4 2.2k(J)	1
11-R117	ER343078	Carbon RD1/4 2.7k(J)	1
11-R118	ER391623	Metal Oxide Film 1W 1k(K)	1
11-R119	ER357456	Carbon RD1/4 2.2k(J)	1
11-R120	ER213300	Carbon RD1/4 680(J)	1
11-R121	ER391623	Metal Oxide Film 1W 1k(K)	1
11-R122	ER306843	Carbon RD1/4 1.2k(J)	1
11-R123	ER213300	Carbon RD1/4 680(J)	1
11-R124	ER211667	Carbon RD1/4 100(J)	1
11-R125	ER212883	Carbon RD1/4 4.7k(J)	1
11-R126	ER213030	Carbon RD1/4 5.6k(J)	1
11-R127	ER211465	Carbon RD1/4 1k(J)	1
11-R128	ER212883	Carbon RD1/4 4.7k(J)	1
11-R129	ER213030	Carbon RD1/4 5.6k(J)	1
11-R130	ER211465	Carbon RD1/4 1k(J)	1
11-R131	ER212883	Carbon RD1/4 4.7k(J)	1
11-R132	ER213030	Carbon RD1/4 5.6k(J)	1
11-R133	ER380147	Carbon RD1/4 10(J)	1
11-R134	ER304290	Carbon RD1/4 10(J)	1

FIG. 12 PHOTO OF OSC. P.C. BOARD (KD-A5209)

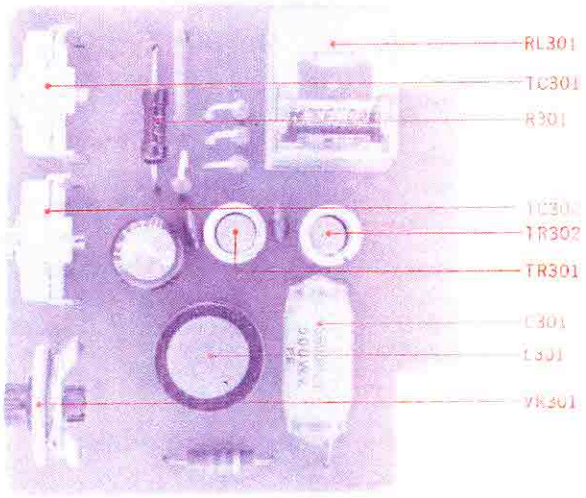

OSC. P.C. BOARD (KD-A5209) BLOCK

Symbol No.	Parts No.	Description	Q'ty
12-1x	BA493468	OSC. P.C. Board Comp. (KD-A5209)	1
12-TR301, 2	ET304255	Transistor 2SC971(2) (3) (red)	2
12-L301	EO383365	OSC. Coil OT-204	1
12-RL301	EP383321	Relay TECK-36 DC22V1000	1
12-VR301	EV496271	Semi-fixed Volume V18K32(4US)B 2k	1
		Capacitor, Vertical Type	
12-TC301, 2	EC425250	Trimmer A-1P3-3 70PF	2
12-C301	EC383400	Plustic Film 5600PF(J) 500WV	1
12-C302	EC220678	Elect. 47μF 25WV	1
12-C303, 4	EC250841	Mylar 0.01μF(J) 50WV	2
		Resistor, Stopper Type	
12-R301	ER398856	Metal Oxide Film 1W 100(K)	1
12-R302	ER212883	Carbon RD1/4 4.7k(J)	1
12-R303	ER304402	Carbon RD1/4 470(J)	1
12-R304, 5	ER315944	Carbon RD1/4 3.3(J)	2
12-R306	ER803272	Solid RC1/2W 560(K)	1

When ordering parts, please describe Parts Number, Serial Number, and Model Number in detail.

FIG. 13 PHOTO OF OUTPUT CIRCUIT P.C. BOARD (KD-A5215)

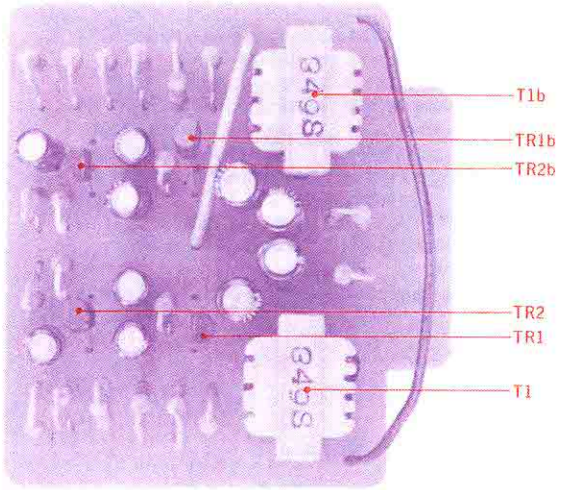

OUTPUT CIRCUIT P.C. BOARD (KD-A5215) BLOCK

Symbol No.	Parts No.	Description	Q'ty
13-1x	BA493492	Output Circuit P.C. Board Comp. (KD-A5215)	1
13-TR1, 2	ET399846	Transistor 2SC945(Q)	4
13-T1	BT490702	Head Phone Trans. N19-349S	2
		Capacitor, Vertical Type	
13-C1	EC331828	Elect. 3.3μF 25WV	2
13-C2	EC450055	Elect. 1μF 25WV	2
13-C3, 4	EC220994	Elect. 10μF 25WV	4
13-C5	EC450055	Elect. 1μF 25WV	2
		Resistor, Stopper Type	
13-R1, 2	ER211667	Carbon RD1/4 100(J)	4
13-R3, 4	ER361528	Carbon RD1/4 56k(J)	4
13-R5	ER380711	Carbon RD1/4 220k(J)	2
13-R6	ER211757	Carbon RD1/4 100k(J)	2
13-R7, 8	ER357456	Carbon RD1/4 2.2k(J)	4
13-R9	ER211465	Carbon RD1/4 1k(J)	2
13-R10	ER211667	Carbon RD1/4 100(J)	2

FIG. 14 PHOTO OF SWITCH P.C. BOARD (KD-A5217)

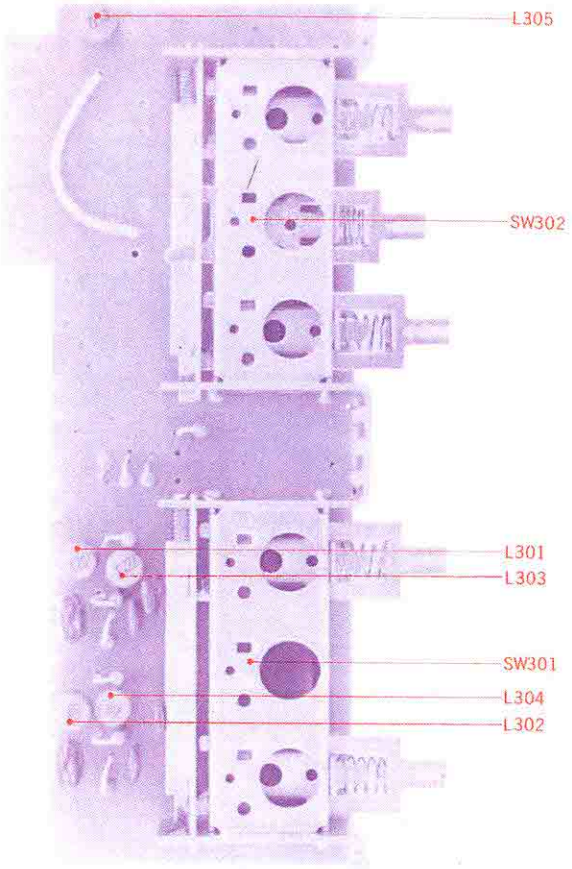

SWITCH P.C. BOARD (KD-A5217) BLOCK

Symbol No.	Parts No.	Description	Q'ty
14-1x	BA493367	Switch P.C. Board Comp. (KD-A5217)	1
14-SW301	ES424146	Push Switch TUM 31218K	1
14-SW302	ES448053	Push Switch SPT-034A13	1
14-L301, 2	EO243977	Ferri Inductor FL7H 1MH(J)	2
14-L303, 4	EO458932	Ferri Inductor FL7H 2.2MH(J)	2
14-L305	EO346500	Ferri Inductor FL7H 220μH(J)	1
14-2x	EZ496506	LN Switch Base	1
14-3x	ES482861	Push Switch UEG-63A	1
14-4x	ZW461935	Screw, round head 2.6x4	2
14-5x	SK487675	Knob C	1
		Capacitor, Vertical Type	
14-C301	EC368357	Mylar 0.056μF(J) 50WV	1
14-C302	EC250975	Mylar 0.015μF(J) 50WV	1
14-C303	EC411827	Mylar 0.0082μF(J) 50WV	1
14-C304	EC368357	Mylar 0.056μF(J) 50WV	1
14-C305	EC250975	Mylar 0.015μF(J) 50WV	1
14-C306	EC411827	Mylar 0.0082μF(J) 50WV	1
		Resistor, Stopper Type	
14-R301	ER306360	Carbon RD1/4 6.8k(J)	1
14-R302, 3	ER346601	Carbon RD1/4 47k(J)	2
14-R304	ER306360	Carbon RD1/4 6.8k(J)	1
14-R305, 6	ER362441	Carbon RD1/4 1.8k(J)	2
14-R307	ER306843	Carbon RD1/4 1.2k(J)	1
14-R308, 9	ER362441	Carbon RD1/4 1.8k(J)	2
14-R310	ER306843	Carbon RD1/4 1.2k(J)	1

When ordering parts, please describe Parts Number, Serial Number, and Model Number in detail.

FIG. 15 PHOTO OF PRE-AMP. CHASSIS P.C. BOARD (KD-A5216)

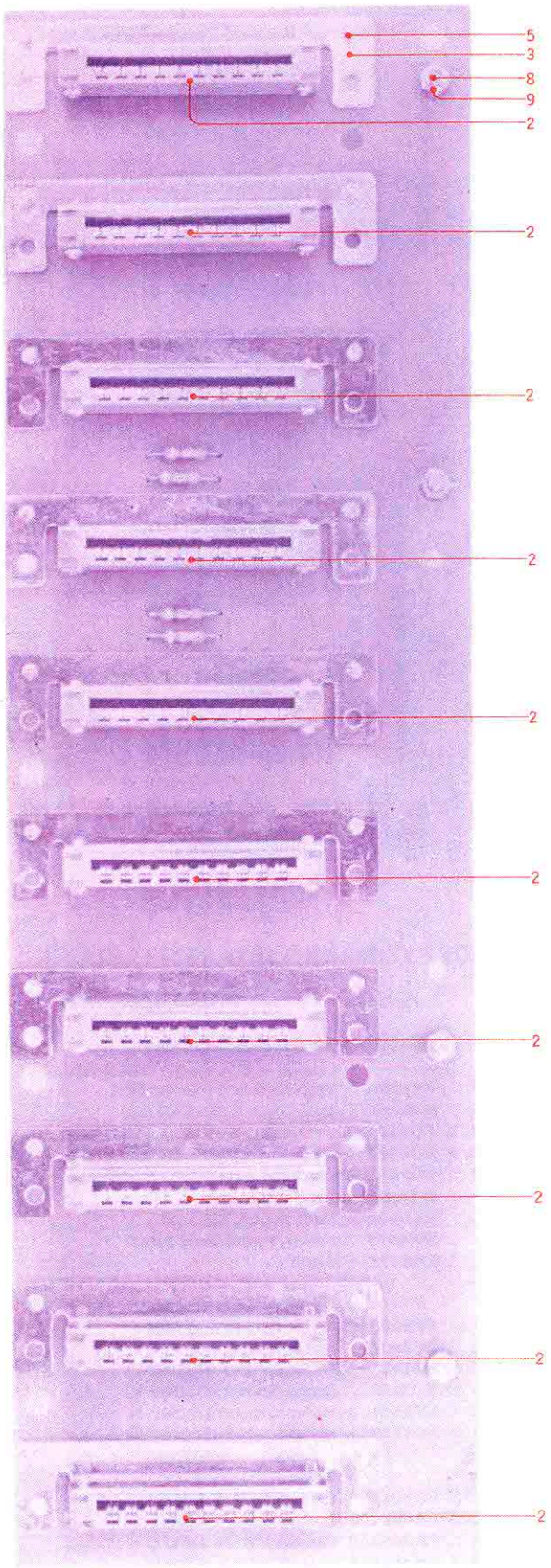

PRE-AMP. CHASSIS P.C. BOARD (KD-A5216) BLOCK

Symbol No.	Parts No.	Description	Q'ty
15-1x	BA493470	Pre-amp. Chassis P.C. Board Comp. (KD-A5216)	1
15-2	EJ398733	10P Multi-jack 500-010-098	10
15-3	EZ496304	Multi Jack Holder	10
15-4x	ZW465298	Screw, pan head 2.3x10	20
15-5	ZW447772	Tapping Screw #2 3x6(BR)	20
15-6x	EJ446185	18P Multi-jack 3250-018-098	1
15-7x	EJ293084	14P Multi-jack-1 3250-014-098	1
15-8	ZW413785	Screw, binding head 3x12	4
15-9	ZW273756	M3 Nut	4
15-10x	ZW403345	Washer (ALP)D3.2x8x2t	4
15-11x	ZW273802	M3 Toothed Lock Washer	2
15-R1 to 4	ER329308	Carbon Resistor RD1/4 47k(J) (Insu. type)	4

FIG. 16 PHOTO OF COIL P.C. BOARD (KD-1097)

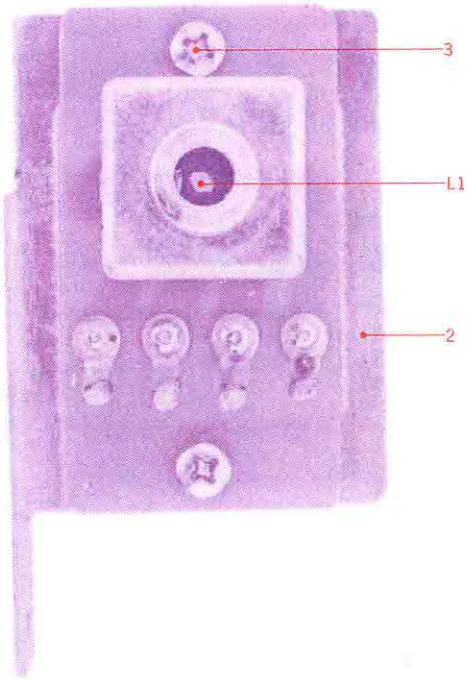

COIL P.C. BOARD (KD-1097) BLOCK

Symbol No.	Parts No.	Description	Q'ty
16-1x	BA497845	Coil P.C. Board Comp. (KD-1097)	1
16-L1	EO403446	Variable Coil VI2031 SC-01	1
16-2	EZ495832	Coil P.C. Board Base	1
16-3	ZW413155	Screw, binding head 3x6	2

When ordering parts, please describe Parts Number, Serial Number, and Model Number in detail.

FIG. 17 (A) ILLUSTRATION OF POWER SUPPLY BLOCK

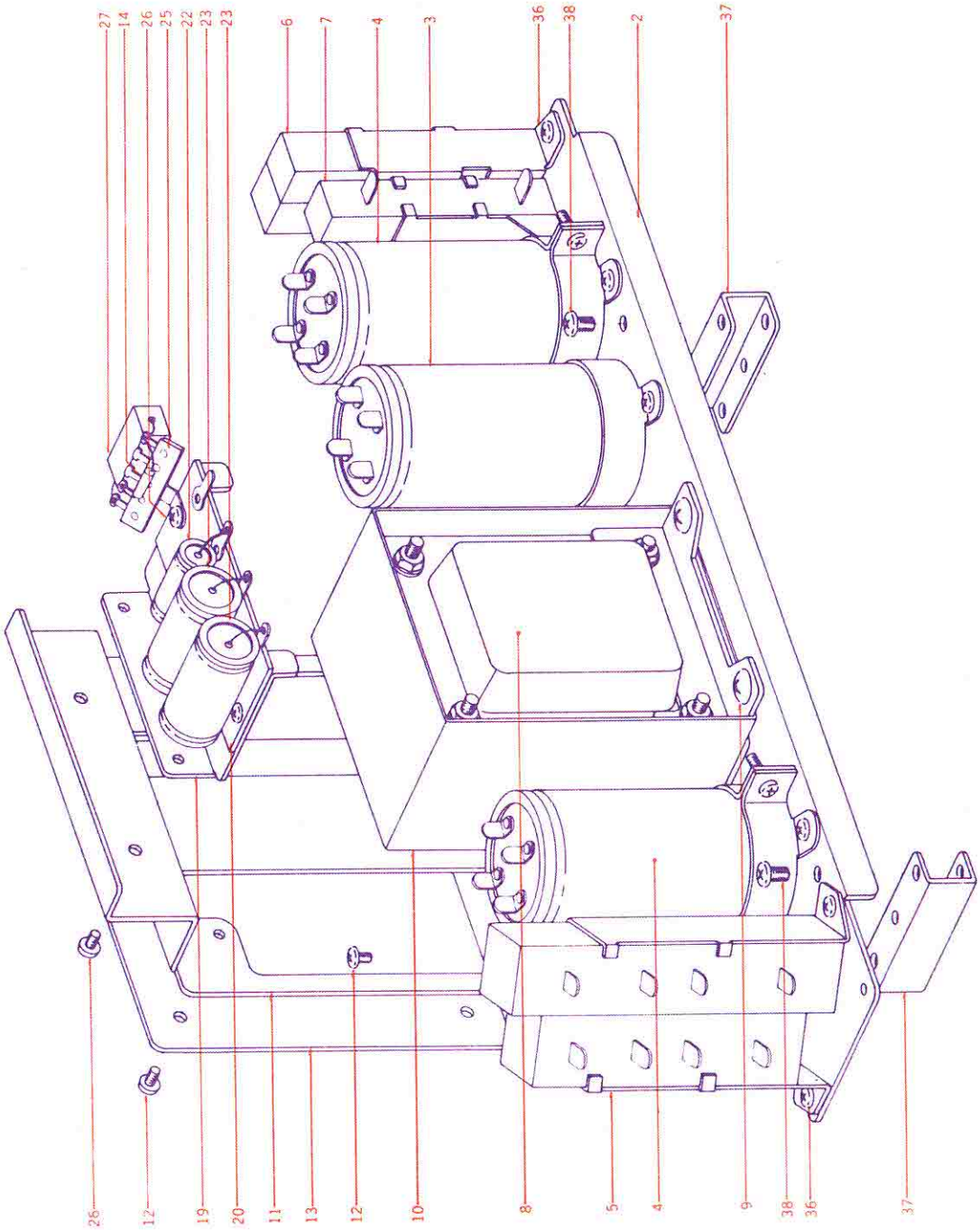

POWER SUPPLY BLOCK

Ref. No.	Parts No.	Description	Schematic No.	Q'ty
17-1x	BA426251	Power Supply Block Comp.	KG, KD, KF, KH	1
17-2	MZ488924	Trans. Table	KH-2052	1
17-3	EC434081	MP/C. 3+0.5μF 200WV (Lug type Uni/D.)	24-9-58	1
17-4	EC398632	MP/C. 3+1μF 260WV (Lug type Uni/D.)	24-9-52	2
17-5	ER426690	Cement/R. H2B(350+150x200+500)	35-16-25	1
17-6	ER441955	Cement/R. H1B(60x1.5k+500)K	35-16-24	1
17-7	ER472296	Cement/R. H20B 220(K)	35-16-16	1
17-8	ET466560	Power Trans. KGT-2	38-4-146	1
17-9	ZW468112	Tapping Screw #2 4x8(truss)		4
17-10	EZ461125	Trans. Shield Plate C	MC-5017	1
17-11	MZ465772	Trans. Table D	KD-A2008	1
17-12	ZW490228	Tapping Screw #2 3x8(binding)		6
17-13	EA465851	Capacitor P.C. Board	KD-A2013	1
17-14	ED224550	Silicon Diode 10D4	45-2-16	2
17-15	EZ472206	Capacitor Insulator Plate B	KD-2064	1

When ordering parts, please describe Parts Number, Serial Number, and Model Number in detail.

FIG. 17 (B. C) PHOTO OF POWER SUPPLY BLOCK

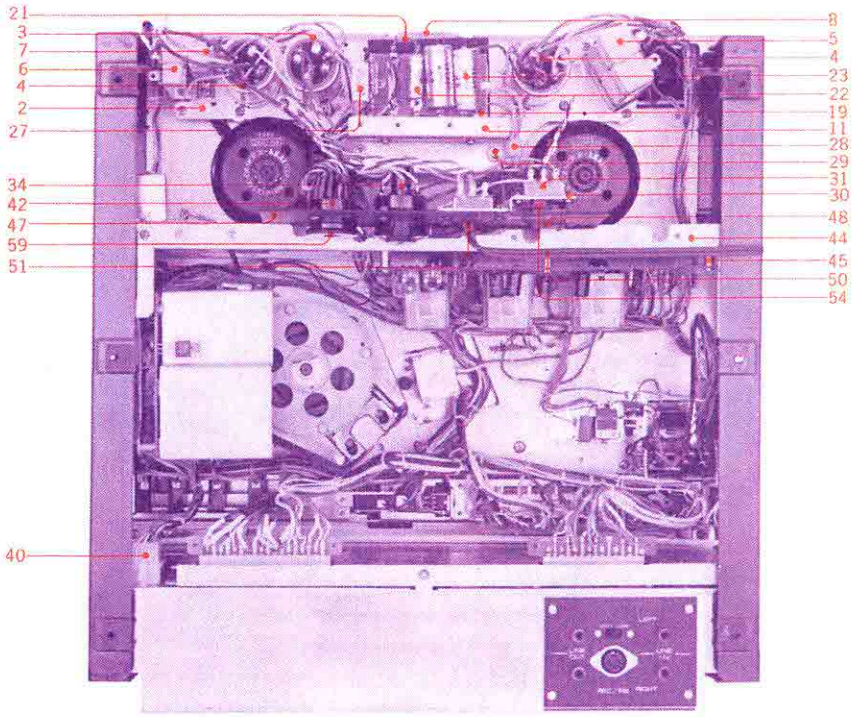

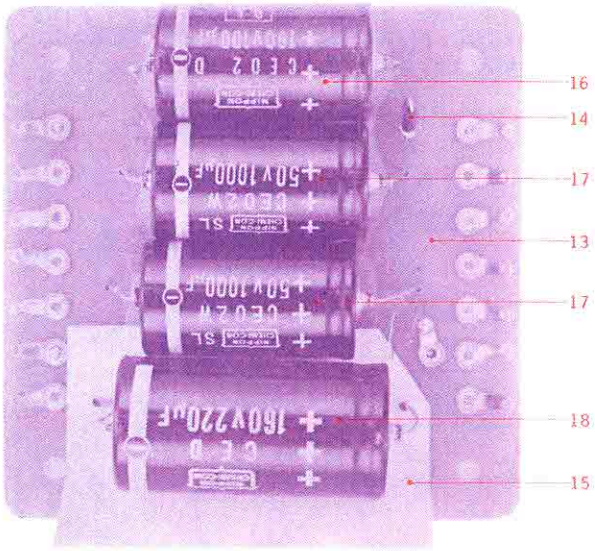

Ref. No.	Parts No.	Description	Schematic No.	Q'ty
17-16	EC316091	Elect./C. 100μF 160WV(Tub. type)	24-14-14	1
17-17	EC365692	Elect./C. 1000μF 50WV(Tub. type)	24-13-15	2
17-18	EC346746	Elect./C. 220μF 160WV(Tub. type)	24-14-8	1
17-19	EZ397282	Capacitor Retaining Base	KD-2027	1
17-20	EZ398946	Terminal Plate SP-0501 4P(B type)	33-4-9	1
17-21	ER430143	Carbon/R. RD1/4 120(J) (Insu. type)	35-9-5	1
17-22	EC273464	MP/C. 0.1μF(M) 350WVDC(Tub. type)	24-9-4	1
17-23	EC341842	MP/C. 0.47μF(M) 300WVAC(Tub. type)	24-9-35	2
17-24x	ZW273778	M3 Earth Lug		1
17-25	EJ255115	Lug Plate VB2L2	33-4-3	1
17-26	ZW323728	Screw, binding head 3x5		4
17-27	ER466986	Cement/R. S5W 45(K) (Wire-wound type)	35-16-3	1
17-28	EZ328320	Nylon Clip HP-5N		2
17-29	ZW462194	Tapping Screw #2 3x8(pan), w/washer		2
17-30	EZ397304	Frequency Change Switch Plate A	KD-2043	1
17-31	ES375478	Slide Switch ESD-279DU	25-3-23	2
17-32x	ZW371856	Iso Screw, binding head 3x5		2
17-33x	ZW440291	Iso Screw, countersunk head 3x6		2
17-34	EJ233370	Power Plug Socket S-18010 (Volt/S.)	40-2-3	1
17-35x	EF338387	Fuse ST-2 1.5A	39-1-26	1
17-36	ZW472274	Tapping Screw #2 3x6(binding)		11
17-37	MZ397170	Trans. Table C	KD-1065	2
17-38	ZW417150	Screw, pan head 4x6		4
17-39x	EJ310871	18P Multi-jack J-2 3250-018-001	31-4-11	2
17-40	EJ450573	9P Mate-N-Lock Cap Housing 1-480277-0	52-1-7	1
17-41x	HZ243191	Pin Contact 60511-1	52-1-1	8
17-42	EJ222748	Sub Magnale Socket #311SG	31-1-39	1
17-43x	MZ302400	Remote Control Socket Mt. Plate	RX-515	1
17-44	EZ397135	Center Frame	KD-1053	1
17-45	EZ397743	P.C. Board Prop	KD-2044	3
17-46x	ZW323728	Screw, binding head 3x5		7
17-47	EZ496383	Connector Plate	KH-2044	1
17-48	EJ378944	U/L AC Socket S-I 9122	31-1-47	1
17-49x	MZ414123	Hollow Rivet 3x5.9		2
17-50	EZ383938	U/L AC Cord 3M	26-3-20	1
17-51	EZ382263	Strain Relief SR-4K-4	2-7-12	1
17-52x	EZ246936	Strain Relief SR-6W-1(3 core)	2-7-8	1
17-53x	EJ205986	Cramp Terminal 2-SD	32-1-8	1
17-54	EZ397124	Cycle Change Switch Plate B	KD-1055	1
17-55x	ZW201150	Screw, truss head 3x6(black)		4
17-56x	ZW374128	Iso Screw, truss head 3x8		2
17-57x	ZW201150	Screw, truss head 3x6(black)		2
17-58x	ZW447761	Tapping Screw #2 3x6(BR)		4
17-59	EJ326430	11P Short Plug A	42-1-25	1

When ordering parts, please describe Parts Number, Serial Number, and Model Number in detail.

FIG. 18 PHOTO OF SUB PANEL BLOCK

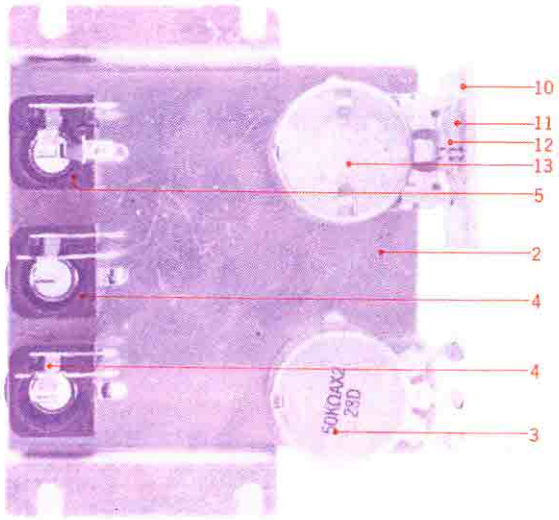

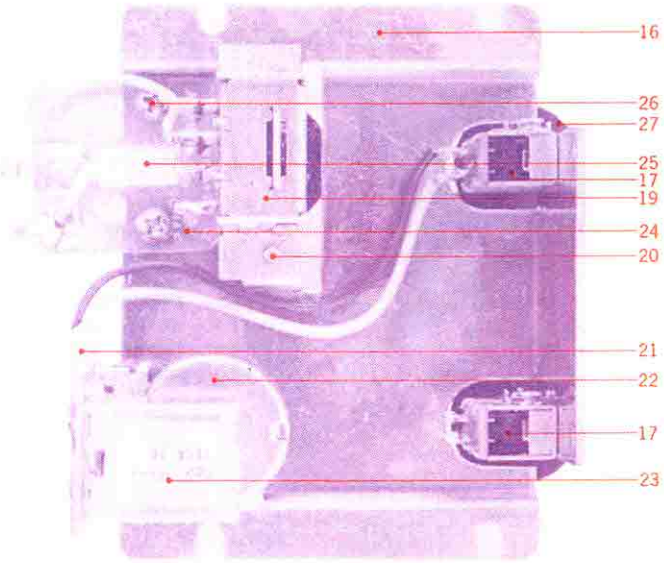

SUB PANEL BLOCK

Ref. No.	Parts No.	Description	Schematic No.	Q'ty
		SUB PANEL (L) BLOCK		
18-1x	BZ493391	Sub Panel (L) Block Comp.	KG-2	1
18-2	SP397991	Sub Panel (left)	KD-5019	1
18-3	EV398575	Double Volume DJ20A 50kx2(frictional)	36-3-25	1
18-4	EJ391094	Mic. Jack 2PMJ1P	31-2-27	2
18-5	EJ391083	Mic. Jack 3PMJ1P	31-2-28	1
18-6x	EZ225180	Nylon Collar, Jack	LD-520	2
18-7x	ZW260368	Washer (Fiber)D9.2x18x0.5t		2
18-8x	ZW375153	E Jack Nut		3
18-9x	ZW272722	M9 Toothed Lock Washer D9.3x13x0.5t		1
18-10	EA496124	Volume P.C. Board	KD-A5218	1
18-11	ER213715	Carbon/R. RD1/4 100k(J) (Insu. type)	35-9-5	2
18-12	ER329308	Carbon/R. RD1/4 47k(J) (Insu. type)	35-9-5	2
18-13	EV496135	Double Volume DJ30R 100kAx2(frictional)	36-3-46	1
18-14x	ZW406181	Washer (Mylar)D9.2x18x0.25t		2

Ref. No.	Parts No.	Description	Schematic No.	Q'ty
		SUB PANEL (R) BLOCK		
18-15x	BZ493413	Sub Panel (R) Block Comp.	KG-2	1
18-16	BZ496146	Sub Panel (right) (KG-2)	KD-A5203	1
18-17	ES447884	Push Switch UEG-222B4AF	25-5-47	2
18-18x	ZW461935	Screw, round head 2.6x4		2
18-19	ES493536	Push Switch SPM-015 (Lead type)	25-5-72	1
18-20	ZW371856	Iso Screw, binding head 3x5		2
18-21	EA496170	Volume P.C. Board D	KD-A5206	1
18-22	EV426791	Double Volume DJ20R 10kAx2	36-3-31	1
18-23	EP383321	Relay TECK-36 DC22V1000	47-2-20	1
18-24	EA496168	Dolby Lamp P.C. Board	KD-A5212	1
18-25	EL390576	Pilot Lamp RM6-24V-50MA	28-2-6	1
18-26	ZW447772	Tapping Screw #2 3x6(BR)		2
18-27	EZ397980	Camoflage Cloth	KD-5029	3
18-28x	SK487675	Knob C, w/bush	CG-2007	2
18-29x	SK496528	Knob D, w/bush	CG-2007	1

When ordering parts, please describe Parts Number, Serial Number, and Model Number in detail.

FIG. 19 PHOTO OF AMPLIFIER ASSEMBLY BLOCK

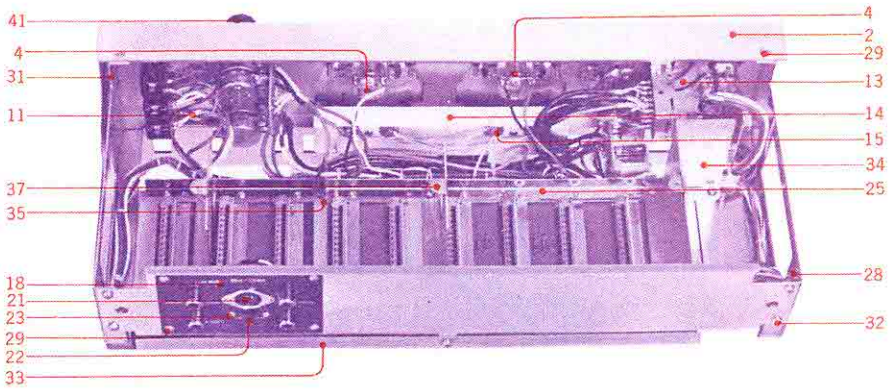

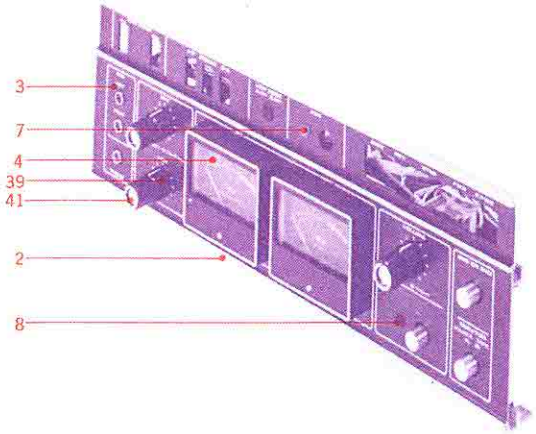

AMPLIFIER ASSEMBLY BLOCK

Ref. No.	Parts No.	Description	Schematic No.	Q'ty
		AMP. PANEL BLOCK		
19-1x	BZ493380	Amp. Panel Block Comp.	KG-2	1
19-2	EP496080	Amp. Panel D	KD-A5210	1
19-3	EZ436217	Collar, Jack	MC-5006	3
19-4	EM494684	VU Meter CO2404R	46-1-59	2
19-5x	ZG290878	VU Meter Spring	DX-504	8
19-6x	ZW273756	M3 Nut		8
19-7	EZ426780	Illumination Escutcheon (red)	61-5023	1
19-8	EZ435104	Illumination Escutcheon (gleen)	61-5023	1
19-9x	SZ492895	Lamp Mask B	61-5033	1
19-10x	SZ496091	Lamp Mask B	KD-A5211	1
19-11	BZ493391	Sub Panel (L) Block Comp.	KG-2	1
19-12x	ZW323728	Screw, binding head 3x5		8
19-13	BZ493413	Sub Panel (R) Block Comp.	KG-2	1
19-14	EZ396102	Lamp Holder	KD-A5204	1
19-15	EA496113	Lamp P.C. Board (KG-2)	KD-A5205	2
19-16x	EL295312	No. 2 Lamp 8V 0.2A	28-2-8	2
19-17x	ZW413155	Screw, binding head 3x6		2
		JACK PLATE BLOCK		
19-18	BZ493435	Jack Plate Block Comp.	KG-2	1
19-19x	ER496181	Carbon/R. RD1/4 270(J) (Insu. type)	35-9-5	2
19-20x	ER345712	Carbon/R. RD1/4 22k(J) (Insu. type)	35-9-5	6
19-21	EJ299305	5P Din-jack	31-1-1	1
19-22	ES452057	6P Slide Switch S-J0282 #01	25-3-36	1
19-23	ZW410231	Screw, pan head 2.6x5		2
19-24x	ZW273778	M3 Earth Lug		1
		ASSEMBLY BLOCK		
19-25	EZ496517	Amp. Chassis B	KD-A5219	1
19-26x	EJ300508	9P Mate-N-Lock Plug Housing 1-480274-0	52-1-7	1
19-27x	EJ373634	Socket Contact 61115-1	52-1-1	8
19-28	SP397844	Side Panel A	KD-5005	1
19-29	ZW424124	Screw, countersunk head 3x5		2
19-30x	ZW323728	Screw, binding head 3x5		2
19-31	SP398722	Side Panel B	KD-5005	1
19-32	ZW447772	Tapping Screw #2 3x6(BR)		25
19-33	EZ496023	Amp. Shield B	KD-A5220	1
19-34	EZ496034	Shield Plate A	KD-A5221	1
19-35	EZ496056	Shield Plate B	KD-A5222	1
19-36x	EZ235113	Trans. Cover Moltprene	LD-535	1
19-37	EZ496293	P.C. Board Retaining Metal	KD-A5223	3
19-38x	EZ496045	Card Retainer (KG-2)	KD-A5202	1
19-39	SK496067	Double Knob A2	KD-5012	3
19-40x	ZW200755	Set Screw 3x5.5(cup)		3
19-41	SK496078	Double Knob B3	KD-5013	3
19-42x	ZW200766	Set Screw 3x5(cup)		3

When ordering parts, please describe Parts Number, Serial Number, and Model Number in detail.

FIG. 20 PHOTO OF FINAL ASSEMBLY BLOCK

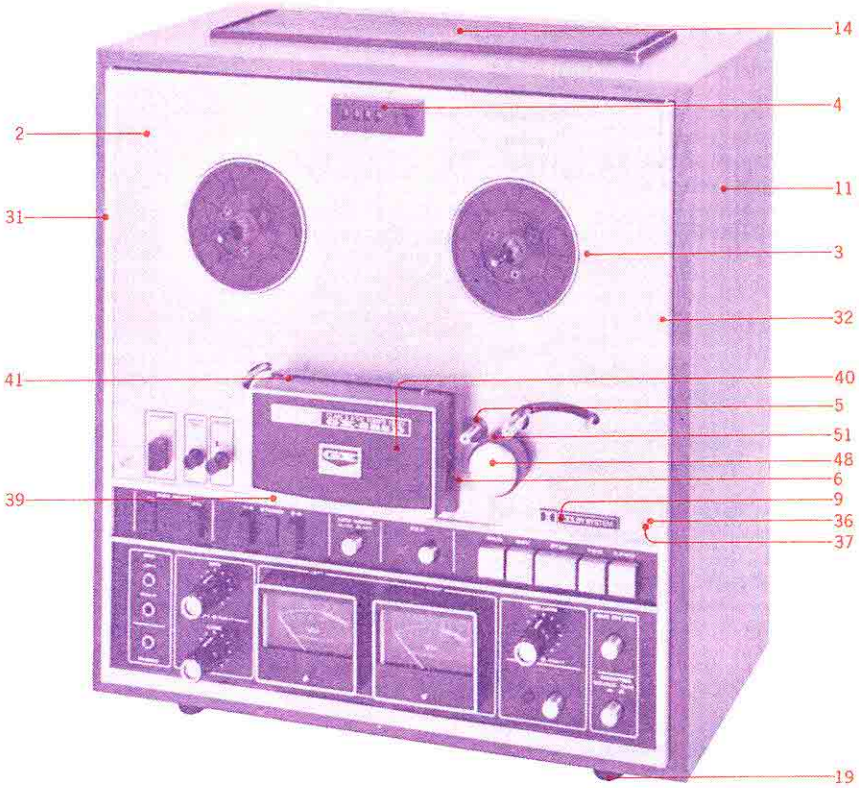

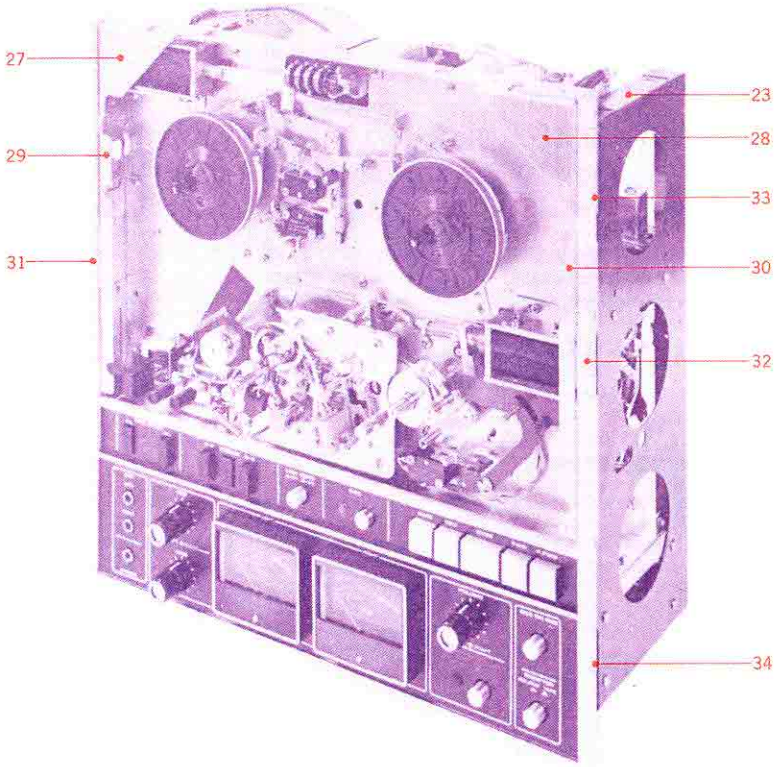

FINAL ASSEMBLY BLOCK

Ref. No.	Parts No.	Description	Schematic No.	Q'ty
		MECH. PANEL BLOCK		
20-1x	SP496563	Mech. Panel Block Comp.	KG-2	1
20-2	SP495955	Mech. Panel C	KD-6006	1
20-3	SZ435082	Panel Ring	KD-A6004	2
20-4	SZ397618	Counter Escutcheon	KD-6008	1
20-5	SZ397620	Capstan Escutcheon	KD-6009	1
20-6	SC495966	Head Cover Base Washer B	KD-6010	1
20-7x	ZW413155	Screw, binding head 3x6		2
20-8x	ZW200766	Set Screw 3x5(cup)		2
20-9	SM495977	Name Plate (Dolby)	KD-A6207	1
		CASE BLOCK		
20-10x	BC512166	Case Block Comp.	KG-2	1
20-11	BC512177	Wood Case C	KD-4001	1
20-12x	ZW447963	Tapping Screw #1 3x10(truss)		23
20-13x	SZ439694	Case Corner Angle	KD-6031	2
20-14	SZ382230	Ventilator	RD-A404	1
20-15x	ZW439661	Screw, truss square 3x15 (without groove)		4
20-16x	ZW273756	M3 Nut		4
20-17x	SZ382241	Ventilator Retaining Plate	RD-A405	1
20-18x	ZW439672	Tapping Screw #1 4x10(truss)		1
20-19	SZ377190	LM Rubber Foot	LM-404	4
20-20x	ZW419646	Washer (SPC)D4.5x9.8x0.5t		4
20-21x	ZW403571	Wood Screw, round head 4.5x20		4
20-22x	SZ218856	Case Shield	RD-410	1
		ASSEMBLY BLOCK		
20-23	SZ397495	Side Frame A, w/angle (right)	KD-6002	1
20-24x	SZ397506	Side Frame B, w/angle (left)	KD-6002	1
20-25x	ZW290248	U type Speed Nut M4 #1(small)	6-3-1	6
20-26x	ZW290250	U type Speed Nut M4 #1(large)	6-3-2	10
20-27	SZ397517	Corner Angle A (left)	KD-6003	1
20-28	SZ397528	Corner Angle B (right)	KD-6003	1
20-29	SZ397530	Side Angle A (left)	KD-6004	1
20-30	SZ397541	Side Angle B (right)	KD-6004	1
20-31	SZ435014	Sash	KD-6005	1
20-32	SP406067	KD Sash	KD-6005	1
20-33	ZW413741	Screw, binding head 3x8		10
20-34	ZW447805	Tapping Screw #2 3x12(BR)		2
20-35x	ZW200384	Screw, countersunk head 3x6		2
20-36	ZW408418	Panel Washer	KD-6029	2
20-37	ZW203084	Screw, oval countersunk head 3x8		2
20-38x	ZW323728	Screw, binding head 3x5		2
20-39	SC495911	Head Cover B	KD-A6001	1
20-40	SM495922	Name Plate GX-285D	KD-A6205	1
20-41	ZW201150	Screw, truss head 3x6(black)		2
20-42x	ZW259806	Washer (SPC-1)D4.5x12.8x1t		6
20-43x	ZW366377	Tapping Screw #1 4x45(truss)		4
20-44x	SZ377190	LM Rubber Foot	LM-404	4
20-45x	ZW419646	Washer (SPC)D4.5x9.8x0.5t		4
20-46x	ZW434283	Tapping Screw #1 4x30(truss)		4
20-47x	ZW200621	Tapping Screw #1 4x25(truss)		2
20-48	SK425158	Pinch Roller Cap	MS-6020	1
20-49x	SZ495944	Ventilator Panel	KH-6025	1
20-50x	ZW324448	Tapping Screw #1 3x10(truss)		4
20-51	MP424023	Pinch Roller (KD)	KD-1084	1
20-52x	EF338387	Fuse ST-2 1.5A	39-1-26	1
20-53x	EF304626	Fuse ST-4 1A	39-1-28	2

When ordering parts, please describe Parts Number, Serial Number, and Model Number in detail.

INDEX

Parts No.	Ref. No. & Symbol No.
BA426251	17-1x
BA426284	11-1x
BA493367	4-14
BA493367	14-1x
BA493446	8-1x
BA493457	9-1x
BA493468	12-1x
BA493470	15-1x
BA493481	6-1x
BA493492	13-1x
BA493503	7-1x
BA497845	16-1x
BA499601	10-1x
BC512166	20-10x
BC512177	20-11
BH426240	1-1x
BM314741	2-32
BM423854	3-1x
BR499588	2-2x
BR499590	2-1x
BS423865	5-55x
BS493345	5-27x
BT466560	17-8
BT490702	13-T1
BZ398338	5-19x
BZ398362	5-46x
BZ428940	5-1x
BZ434992	5-67x
BZ435003	1-9x
BZ493356	4-1x
BZ493380	19-1x
BZ493391	18-1x
BZ493391	19-11
BZ493413	18-15x
BZ493413	19-13
BZ493435	19-18
BZ496146	18-16
EA396898	4-7
EA463206	1-39x
EA465851	17-13
EA466547	1-40x
EA496113	19-15
EA496124	18-10
EA496168	18-24
EA496170	18-21
EA496258	9-2
EC220151	10-C207
EC220432	10-C213
EC220612	11-C103
EC220612	11-C109
EC220678	8-C7
EC220678	8-C22
EC220678	9-C9,10
EC220678	12-C302
EC220994	8-C11
EC220994	8-C19
EC220994	11-C105,6,7
EC220994	11-C110
EC220994	13-C3,4
EC250604	8-C2
EC250661	10-C206
EC250841	9-C7
EC250841	12-C303,4
EC250918	10-C256
EC250975	14-C302
EC250975	14-C305
EC251190	10-C202
EC251291	6-C8
EC251291	6-C15
EC251291	6-C18
EC251291	6-C21
EC251291	7-C6
EC251291	7-C12
EC251291	7-C15
EC251291	7-C18
EC273464	5-105
EC273464	11-C108
EC273464	17-22
EC290520	9-C3
EC290531	8-C9
EC290531	8-C13
EC290564	8-C14
EC308711	11-C104
EC313121	6-C10
EC316091	17-16
EC320040	7-C13
EC320051	6-C1
EC320051	6-C5, 6
EC320051	6-C9
EC320051	6-C14
EC320051	6-C17
EC320051	6-C20
EC320051	7-C1
EC320051	7-C7
EC320051	7-C11
EC320051	7-C14
EC320051	7-C17
EC320051	8-C1
EC320051	8-C5
EC320051	8-C8
EC320051	8-C15
EC320051	8-C17
EC320051	9-C1
EC320051	9-C4, 5
EC320051	10-C205
EC329771	8-C4
EC329771	8-C6
EC329771	8-C10
EC329771	8-C12
EC329771	9-C2
EC329771	9-C6
EC329850	9-C8
EC329850	10-C209
EC329861	6-C12
EC329861	7-C9
EC329883	6-C11
EC329883	7-C8
EC331705	10-C203
EC331817	10-C254
EC331828	7-C5
EC331828	13-C1
EC336148	7-C20
EC337500	6-C13
EC337500	7-C10
EC341842	17-23
EC346746	17-18
EC350684	10-C208
EC350684	10-C255
EC365692	17-17
EC368357	14-C301
EC368357	14-C304
EC372148	10-C253
EC379170	6-C19
EC379170	7-C16
EC379787	10-C204
EC383400	12-C301
EC389474	7-C4
EC390633	8-C18
EC395504	6-C22
EC395504	7-C19
EC398632	17-4
EC398957	10-C201
EC399690	8-C3
EC403468	10-C251,52
EC411827	14-C303
EC411827	14-C306
EC423562	8-C20, 21
EC424080	10-C210
EC424708	6-C4
EC425250	12-TC301,2
EC434081	17-3
EC438524	10-C211
EC450055	13-C2
EC450055	13-C5
EC456041	11-C101, 2
EC486584	6-C7
EC486584	8-C16
EC493637	6-C16
EC517116	10-C215
ED219464	6-D1
ED219464	6-D5
ED219464	7-D1
ED219464	7-D5
ED219464	11-D104
ED219464	11-D106 to 8
ED219464	11-D111 to 15
ED219464	11-D120,21
ED219464	11-D124,25
ED224526	10-D-201, 2
ED224526	10-D204
ED224526	11-D101 to 3
ED224526	11-D110
ED224526	11-D116 to 19
ED224526	11-D122
ED224526	11-D126
ED224550	11-D123
ED224550	17-14
ED321390	10-TH201
ED329128	10-D252
ED329130	10-D251
ED384096	10-D253
ED487484	6-D3, 4
ED487484	6-D6
ED487484	7-D3, 4
ED487484	7-D6
ED491130	6-D2
ED491130	7-D2
EF304626	20-53x
EF338387	17-35x
EF338387	20-52x
EJ205986	17-53x
EJ222748	17-42
EJ233370	17-34
EJ255115	17-25
EJ293084	15-7x
EJ299305	19-21
EJ300508	19-26x
EJ310871	17-39x
EJ326430	17-59
EJ331380	5-150x
EJ363126	6-TP1
EJ363126	7-TP1
EJ364915	1-72x
EJ373634	19-27x
EJ378944	17-48
EJ391083	18-5
EJ391094	18-4
EJ398733	15-2
EJ446185	15-6x
EJ450573	17-40
EL295312	19-16x
EL390576	4-8
EL390576	18-25
EM494684	19-4
EO243977	14-L301,2
EO244001	8-L1
EO262484	9-L1
EO321254	8-L2
EO346500	14-L305
EO383365	12-L301
EO403446	16-L1
EO458932	14-L303,4
EO496350	6-L1
EO496350	7-L1
EP344136	11-RL101 to 6
EP383321	12-RL301
EP383321	18-23
EP398610	5-20
EP441990	5-2
EP496080	19-2
EP804813	1-58
ER211465	6-R36
ER211465	7-R29
ER211465	8-R11
ER211465	8-R29
ER211465	10-R224,25
ER211465	11-R101
ER211465	11-R108
ER211465	11-R127
ER211465	11-R130
ER211465	13-R9
ER211667	6-R9
ER211667	10-R220
ER211667	11-R124
ER211667	13-R1, 2
ER211667	13-R10
ER211757	8-R14
ER211757	10-R209
ER211757	13-R6
ER211858	8-R27
ER211858	9-R9
ER212016	10-R211
ER212174	6-R15
ER212174	6-R17
ER212264	6-R16
ER212264	8-R18
ER212264	8-R24
ER212264	9-R6
ER212264	9-R12
ER212264	10-R204
ER212477	6-R5
ER212477	6-R18
ER212477	6-R21
ER212477	7-R12
ER212477	7-R14
ER212477	9-R7
ER212681	9-R5
ER212681	10-R252
ER212883	8-R10
ER212883	8-R15
ER212883	8-R23
ER212883	8-R26
ER212883	9-R8
ER212883	9-R11
ER212883	10-R214
ER212883	10-R218
ER212883	11-R104, 5
ER212883	11-R107
ER212883	11-R109
ER212883	11-R112
ER212883	11-R115
ER212883	11-R125
ER212883	11-R128
ER212883	11-R131
ER212883	12-R302
ER213030	10-R221
ER213030	11-R126
ER213030	11-R129
ER213030	11-R132
ER213300	7-R10
ER213300	8-R17
ER213300	11-R120
ER213300	11-R123
ER213467	7-R4
ER213715	18-11
ER304290	10-R226
ER304290	11-R134
ER304402	6-R6
ER304402	8-R5
ER304402	12-R303
ER306360	6-R8
ER306360	7-R5
ER306360	8-R7
ER306360	14-R301
ER306360	14-R304
ER306843	6-R2
ER306843	6-R24
ER306843	7-R17
ER306843	10-R255
ER306843	11-R122
ER306843	14-R307
ER306843	14-R310
ER306887	6-R26
ER306887	6-R38
ER306887	7-R19
ER306887	7-R31
ER306887	10-R217
ER306887	10-R227
ER315944	12-R304, 5
ER329308	15-R1 to 4
ER329308	18-12
ER336442	6-R1
ER336442	6-R28
ER336442	7-R8
ER336442	7-R21
ER336442	8-R1
ER336442	8-R3
ER336442	8-R9
ER336442	8-R19
ER336442	9-R4
ER336442	10-R201
ER336442	10-R205,6,7
ER336442	11-R103
ER342933	7-R6
ER342933	7-R11
ER343078	6-R34
ER343078	7-R3
ER343078	7-R27
ER343078	10-R253
ER343078	11-R111
ER343078	11-R114
ER343078	11-R117
ER345712	19-20x
ER346544	8-R20
ER346601	6-R4
ER346601	6-R33
ER346601	7-R26
ER346601	14-R302,3
ER346994	8-R6
ER349784	8-R25
ER349784	8-R30
ER349907	6-R13
ER349907	6-R31
ER349907	7-R24
ER349907	8-R22
ER349942	6-R23
ER349942	6-R27
ER349942	6-R29, 30
ER349942	7-R16
ER349942	7-R20
ER349942	7-R22, 23
ER349942	8-R13
ER352045	8-R28
ER357456	6-R10
ER357456	6-R22
ER357456	7-R15
ER357456	8-R8
ER357456	10-R203
ER357456	10-R210
ER357456	10-R219
ER357456	10-R222,23
ER357456	10-R251
ER357456	10-R254
ER357456	11-R110
ER357456	11-R113
ER357456	11-R116
ER357456	11-R119
ER357456	13-R7, 8
ER357535	6-R7
ER357535	6-R20
ER357535	7-R13
ER357570	6-R14
ER357570	7-R2
ER357570	8-R4
ER357570	9-R2
ER361528	13-R3, 4
ER361642	6-R35
ER361642	7-R28
ER361642	10-R208
ER362441	8-R16
ER362441	10-R202
ER362441	14-R305, 6
ER362441	14-R308, 9
ER362485	8-R2
ER362485	9-R1
ER362485	9-R3
ER362485	11-R102
ER362485	11-R106
ER363644	6-R12
ER376424	5-3x

INDEX

Parts No.	Ref. No. & Symbol No.	Parts No.	Ref. No. & Symbol No.	Parts No.	Ref. No. & Symbol No.	Parts No.	Ref. No. & Symbol No.	Parts No.	Ref. No. & Symbol No.
ER376424	5-21x	ET398711	11-TR101 to8	HZ382691	1-33	MZ396922	5-6	SZ397541	5-158
ER376424	11-CR101, 2	ET398777	10-TR206	HZ396494	1-3	MZ396933	5-15	SZ397541	20-30
ER376435	5-30	ET398845	8-TR1, 2	HZ396505	1-16	MZ396944	5-11	SZ397618	20-4
ER380147	11-R133	ET399846	13-TR1, 2	HZ396584	1-10	MZ396966	5-9	SZ397620	20-5
ER380711	6-R41	ET399936	10-TR208	HZ396595	1-14	MZ396977	5-24	SZ435014	20-31
ER380711	7-R34	ET403042	10-TR209	HZ396797	1-11	MZ396988	5-130x	SZ435082	20-3
ER380711	9-R10	ET403042	10-TR252	HZ397034	5-87	MZ396990	5-78	SZ439694	20-13x
ER380711	13-R5	ET491051	6-TR5	HZ412637	1-6	MZ397045	5-96x	SZ492895	19-9x
ER380913	6-R37	ET491051	7-TR4	HZ426486	1-2	MZ397078	5-100	SZ495944	20-49x
ER380913	7-R30	EV221826	11-VR102	HZ426497	1-46	MZ397080	5-97	SZ496091	19-10x
ER391623	11-R118	EV398575	18-3	HZ426508	1-47	MZ397168	5-90	ZG206144	1-25
ER391623	11-R121	EV398834	10-VR251	HZ426543	1-81	MZ397170	17-37	ZG208091	5-125
ER398856	12-R301	EV426791	18-22	HZ426554	1-84	MZ397181	5-109	ZG232121	5-147x
ER403097	10-R213	EV426936	11-VR101	HZ426666	1-24	MZ397192	5-53	ZG246857	1-69
ER403187	10-R212	EV496135	18-13	HZ433890	1-79	MZ397203	5-49	ZG255633	2-6
ER424078	10-R228	EV496271	12-VR301	HZ434272	1-21	MZ397214	5-52	ZG290878	19-5x
ER426690	17-5	EV497687	9-VR1	HZ803597	1-20	MZ397315	5-132	ZG303300	1-54
ER426857	6-R39, 40	EV497698	6-VR1, 2	HZ810011	1-56	MZ397337	5-134	ZG315011	2-27
ER426857	7-R7	EV497700	6-VR3	MB303535	2-21	MZ397348	5-135	ZG315011	5-122
ER426857	7-R9	EV497700	7-VR1	MB303535	5-126	MZ397350	5-56	ZG317114	5-77
ER426857	7-R32, 33	EV497711	6-VR4	MB314987	2-22	MZ397394	5-127	ZG317496	2-16
ER429996	6-R3	EV497711	7-VR2	MB314987	5-117	MZ397484	5-40	ZG321445	1-51
ER429996	7-R1	EV499364	10-VR202	MC399521	5-99	MZ398182	3-14	ZG366761	5-148
ER430097	6-R25	EZ225180	18-6x	ML314976	2-29	MZ400421	3-16	ZG382757	1-36
ER430097	7-R18	EZ235113	19-36x	ML314976	5-115	MZ402377	5-58	ZG396516	5-50
ER430143	17-21	EZ246936	17-52x	ML396742	5-111	MZ405437	3-2	ZG407575	5-114
ER433877	6-R11	EZ328320	17-28	ML396810	2-30x	MZ414123	17-49x	ZG409015	5-145
ER441955	17-6	EZ380428	10-10	ML396810	5-116	MZ428343	1-22	ZG428398	4-5
ER450011	6-R32	EZ382263	17-51	ML396900	5-143	MZ428343	5-8	ZG428927	5-18
ER450011	7-R25	EZ383938	17-50	ML397383	5-62	MZ428343	5-93	ZG433383	5-94
ER450011	8-R12	EZ397124	17-54	ML403492	5-66	MZ432832	5-69	ZG465478	5-112
ER466986	17-27	EZ397135	17-44	ML403503	5-64	MZ433721	5-149	ZG466154	4-23
ER472296	17-7	EZ397282	17-19	ML409083	5-141	MZ434237	5-154	ZG496438	5-36
ER496181	19-19x	EZ397304	17-30	MP424023	5-153x	MZ434316	5-70	ZG810055	1-57
ER496214	8-R21	EZ397721	10-11	MP424023	20-51	MZ434970	5-71	ZW200226	1-38
ER496337	6-R19	EZ397732	10-14	MR317507	2-17	MZ434981	5-75	ZW200305	1-5x
ER496337	7-R35	EZ397743	10-12x	MS217192	5-92	MZ465772	17-11	ZW200362	1-48
ER498003	10-R256	EZ397743	17-45	MS250165	5-136	MZ466097	4-13	ZW200384	20-35x
ER803272	12-R306	EZ397980	18-27	MS342000	2-5	MZ466108	4-10	ZW200621	20-47x
ES250064	5-57	EZ398946	17-20	MS397001	5-79	MZ467111	3-18	ZW200687	10-7
ES250064	5-102	EZ405213	10-6	MS397012	5-82	MZ488924	17-2	ZW200755	19-40x
ES250075	4-22	EZ407586	10-2	MS397023	5-86	MZ496394	5-28	ZW200766	19-42x
ES250075	5-133	EZ426780	19-7	MS397372	5-61	MZ496405	5-32	ZW200766	20-8x
ES246025	5-128	EZ435104	19-8	MS397473	5-39	MZ802980	5-17	ZW201150	17-55x
ES317531	5-42	EZ436217	19-3	MS408497	5-139	SB438265	4-11	ZW201150	17-57x
ES375478	17-31	EZ461125	17-10	MS424192	3-8	SB496440	4-20	ZW201150	20-41
ES424146	14-SW301	EZ472206	17-15	MS432358	5-68	SB496451	4-21	ZW201464	1-30x
ES447884	18-17	EZ495832	16-2	MS465480	5-84	SC495911	20-39	ZW201475	3-17
ES448053	14-SW302	EZ496023	19-33	MS496427	5-33	SC495966	20-6	ZW201835	5-23x
ES452057	19-22	EZ496034	19-34	MS809987	1-50	SK210521	4-19	ZW202252	1-18
ES482861	4-26	EZ496045	19-38x	MT255420	2-4	SK210521	5-131	ZW203084	20-37
ES482861	14-3x	EZ496056	19-35	MT297663	2-7	SK397596	5-44	ZW206021	3-6
ES493536	18-19	EZ496102	19-14	MT317474	2-14	SK425158	20-48	ZW231805	5-72
ES524790	5-29	EZ496293	19-37	MT317485	2-15	SK487675	4-27	ZW243516	5-124
ET234843	8-TR3	EZ496304	15-3	MT473422	2-9	SK487675	14-5x	ZW259648	1-52
ET234854	6-TR1, 2	EZ496383	17-47	MT488158	2-3	SK487675	18-28x	ZW259683	5-142x
ET234854	6-TR6	EZ496506	4-25	MT495606	2-10	SK496067	19-39	ZW259806	20-42x
ET234854	7-TR1	EZ496506	14-2x	MT495617	2-11x	SK496078	19-41	ZW257477	1-67
ET234854	7-TR5	EZ496517	19-25	MV248117	5-74	SK496528	18-29x	ZW257477	5-10
ET234854	9-TR1, 2	EZ515158	5-59x	MV248130	3-9	SM495922	20-40	ZW257477	5-25
ET304255	12-TR301, 2	HE412187	1-29	MV408510	3-4	SM495977	20-9	ZW260201	1-78
ET329218	7-TR3	HK398452	3-15	MZ250413	5-101	SP397844	19-28	ZW260368	18-7x
ET338894	8-TR6	HL426510	1-80	MZ302400	17-43x	SP397991	18-2	ZW270088	1-68
ET338894	11-TR109 to11	HL426521	1-83	MZ314998	2-23	SP398722	19-31	ZW270088	2-8
ET350335	6-TR3	HL426565	1-85	MZ314998	5-118	SP406067	20-32	ZW270088	5-12x
ET350335	6-TR7	HL809998	1-66	MZ315000	2-24	SP495955	20-2	ZW270088	5-26x
ET350335	7-TR6	HP384524	1-42	MZ315000	5-119	SP496563	20-1x	ZW270088	5-65
ET352146	6-TR4	HR384513	1-34	MZ317373	2-28	SZ218856	20-22x	ZW270088	5-137
ET352146	6-TR8	HZ231884	1-75	MZ317373	5-89	SZ377190	20-19	ZW270101	1-82
ET352146	7-TR2	HZ243191	17-41x	MZ317406	2-31	SZ377190	20-44x	ZW270101	4-6
ET352146	7-TR7	HZ317632	1-13	MZ317406	5-151	SZ382230	20-14	ZW270101	4-12
ET356984	10-TR202	HZ317698	1-59	MZ373318	1-73x	SZ382241	20-17x	ZW270101	5-14x
ET356984	10-TR205	HZ320940	1-65	MZ396527	5-51	SZ397495	20-23	ZW270101	5-110x
ET379462	8-TR4	HZ321344	1-60	MZ396551	5-47	SZ397506	20-24x	ZW270123	5-37x
ET379462	8-TR5	HZ321366	1-62	MZ396573	5-48	SZ397517	5-155x	ZW272722	18-9x
ET379462	10-TR201	HZ321377	1-63	MZ396674	4-3	SZ397517	20-27	ZW273756	1-8
ET379462	10-TR203, 4	HZ321434	1-77	MZ396707	4-2	SZ397528	5-156	ZW273756	5-140x
ET379462	10-TR207	HZ382656	1-41	MZ396832	5-108	SZ397528	20-28	ZW273756	10-5
ET391138	10-TR253	HZ382667	1-43	MZ396911	5-4	SZ397530	5-157x	ZW273756	15-9
ET393581	10-TR251	HZ382680	1-28	MZ396911	5-22	SZ397530	20-29	ZW273756	19-6x

INDEX

Parts No.	Ref. No. & Symbol No.	Parts No.	Ref. No. & Symbol No.
ZW273756	20-16x	ZW413155	19-17x
ZW273778	1-15	ZW413155	20-7x
ZW273778	1-32x	ZW413188	5-83x
ZW273778	2-12x	ZW413223	1-71
ZW273778	4-15x	ZW413278	5-81x
ZW273778	5-60x	ZW413728	10-17x
ZW273778	10-16x	ZW413741	5-91x
ZW273778	17-24x	ZW413741	10-8
ZW273778	19-24x	ZW413741	20-33
ZW273802	1-7x	ZW413785	4-24
ZW273802	10-9x	ZW413785	15-8
ZW273802	15-11x	ZW414066	5-107x
ZW273868	1-53	ZW416687	5-88x
ZW273881	5-146x	ZW417025	10-15x
ZW273960	5-16	ZW417137	5-7
ZW274026	5-80x	ZW417137	5-138
ZW290248	20-25x	ZW417148	1-23x
ZW290250	20-26x	ZW417150	17-38
ZW290283	1-86	ZW419646	20-20x
ZW290283	2-26	ZW419646	20-45x
ZW290283	5-113	ZW419747	3-3x
ZW290283	5-121	ZW420682	5-95
ZW290283	5-144x	ZW421806	10-4
ZW296786	1-17	ZW422965	5-106x
ZW314728	5-34	ZW424056	2-19
ZW317171	5-73	ZW424124	19-29
ZW321592	3-10	ZW424495	5-63
ZW323728	1-31	ZW425981	2-13x
ZW323728	1-61	ZW426587	1-70
ZW323728	2-25x	ZW426611	1-26
ZW323728	3-19	ZW426622	1-44
ZW323728	4-9	ZW426655	1-27
ZW323728	5-5x	ZW433001	5-54x
ZW323728	5-43	ZW434160	5-45x
ZW323728	5-98x	ZW434250	1-19x
ZW323728	5-120	ZW434283	20-46x
ZW323728	5-152	ZW439402	1-12
ZW323728	17-26	ZW439514	5-103x
ZW323728	17-46x	ZW439661	20-15x
ZW323728	19-12x	ZW439672	20-18x
ZW323728	19-30	ZW440291	17-33x
ZW323728	20-38x	ZW447761	17-58x
ZW324448	20-50x	ZW447772	4-29
ZW328577	1-64	ZW447772	15-5
ZW336868	1-37	ZW447772	18-26
ZW345442	5-13x	ZW447772	19-32
ZW345914	1-55	ZW447805	20-34
ZW345982	1-49	ZW447963	20-12x
ZW356883	3-11	ZW461935	4-28
ZW366377	20-43x	ZW461935	14-4x
ZW371856	5-31x	ZW461935	18-18x
ZW371856	5-129	ZW462194	17-29
ZW371856	17-32x	ZW465298	15-4x
ZW371856	18-20	ZW467537	5-38
ZW374128	17-56x	ZW468112	17-9
ZW375153	18-8x	ZW472274	4-4
ZW379405	4-16x	ZW472274	4-17
ZW383646	1-35	ZW472274	17-36
ZW384840	1-76	ZW490228	17-12
ZW391476	3-7x	ZW497733	5-35
ZW392940	10-3	ZW516611	5-85x
ZW397146	5-104x	ZW516644	2-18
ZW397157	5-123		
ZW398125	3-5		
ZW398158	3-12		
ZW399295	1-74x		
ZW403200	4-18		
ZW403222	2-20		
ZW403301	1-4x		
ZW403312	1-45		
ZW403345	15-10x		
ZW403536	3-13		
ZW403571	20-21x		
ZW406181	18-14x		
ZW408418	20-36		
ZW410231	19-23		
ZW411660	5-76		
ZW413155	5-41		
ZW413155	10-13		
ZW413155	16-3		

GX-285D

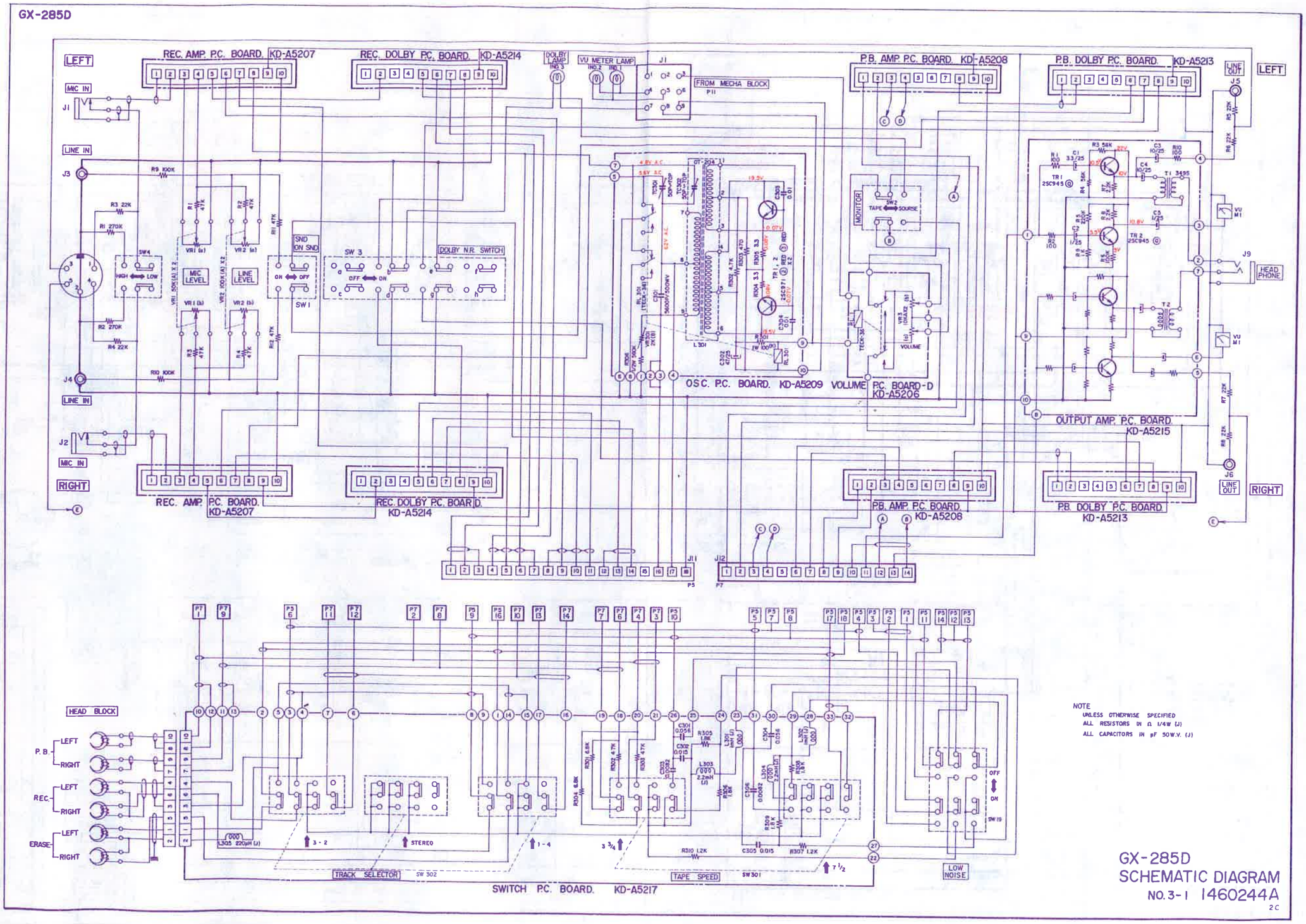

NOTE
UNLESS OTHERWISE SPECIFIED
ALL RESISTORS IN Ω 1/4W (J)
ALL CAPACITORS IN μF 50W.V. (J)

GX-285D
SCHEMATIC DIAGRAM
NO. 3-1 1460244A
2C

GX-285D

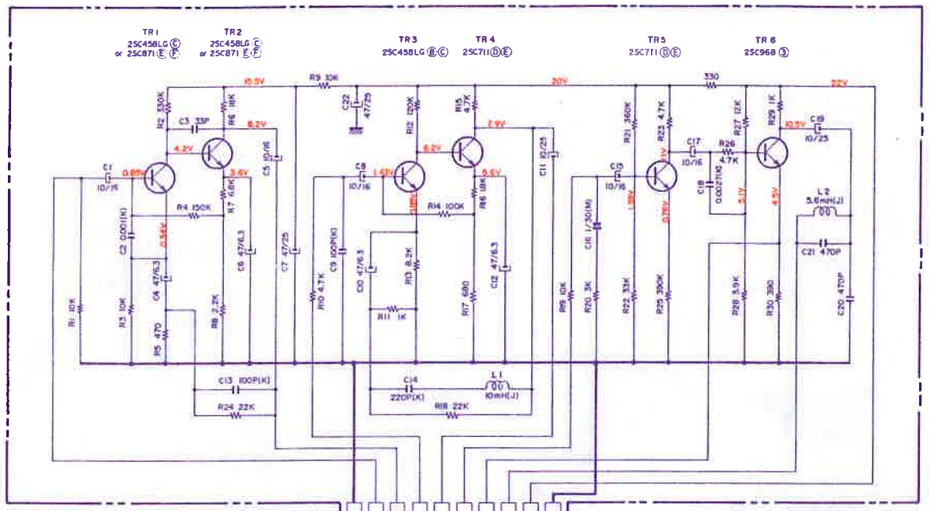

REC. AMP. P.C. BOARD KD-A5207

1, 2 FROM MIC JACK
3, 4 FROM MIC LEVEL VR1
5 TO REC. DOLBY P.C. BOARD
6 TO LOW NOISE SWITCH SW19
7 TO TAPE SPEED SWITCH SW301
8 TO TRACK SELECTOR SWITCH SW302

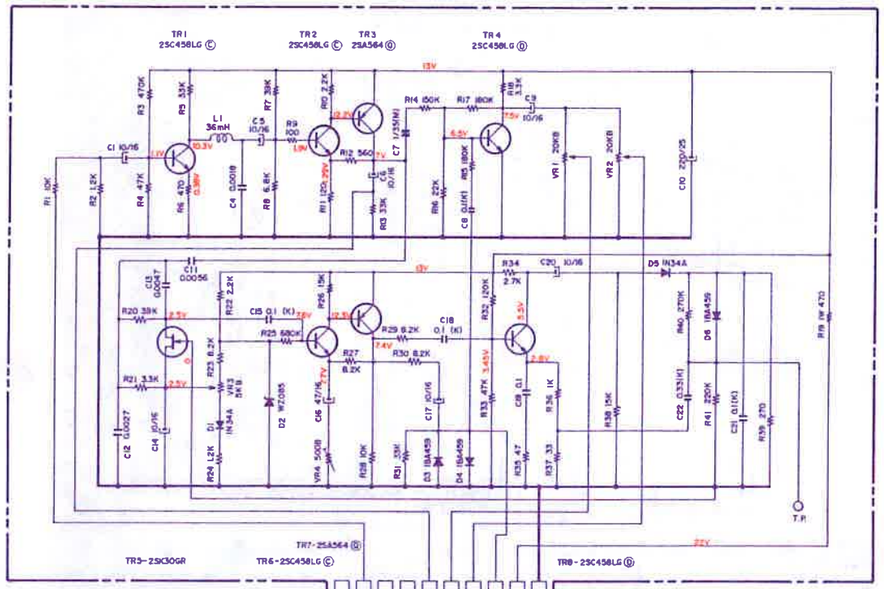

REC. DOLBY P.C. BOARD KD-A5214

2 FROM REC. AMP. P.C. BOARD
5 TO MONITOR SWITCH SW2
6, 7 TO LOW NOISE SWITCH SW19
8 TO DOLBY SWITCH SW3

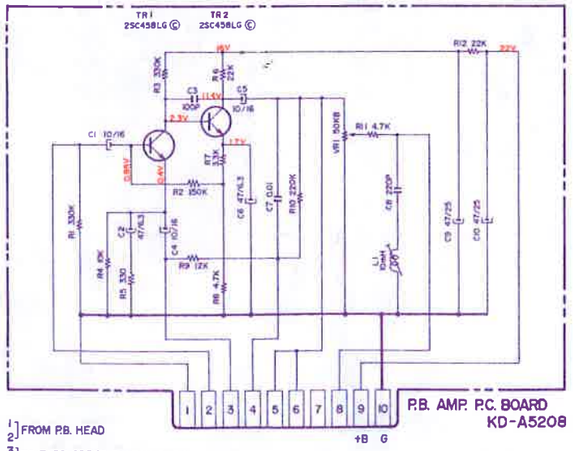

P.B. AMP. P.C. BOARD KD-A5208

1, 2 FROM P.B. HEAD
3, 4 TO TAPE SPEED SWITCH SW301
8 TO P.B. DOLBY AMP. P.C. BOARD

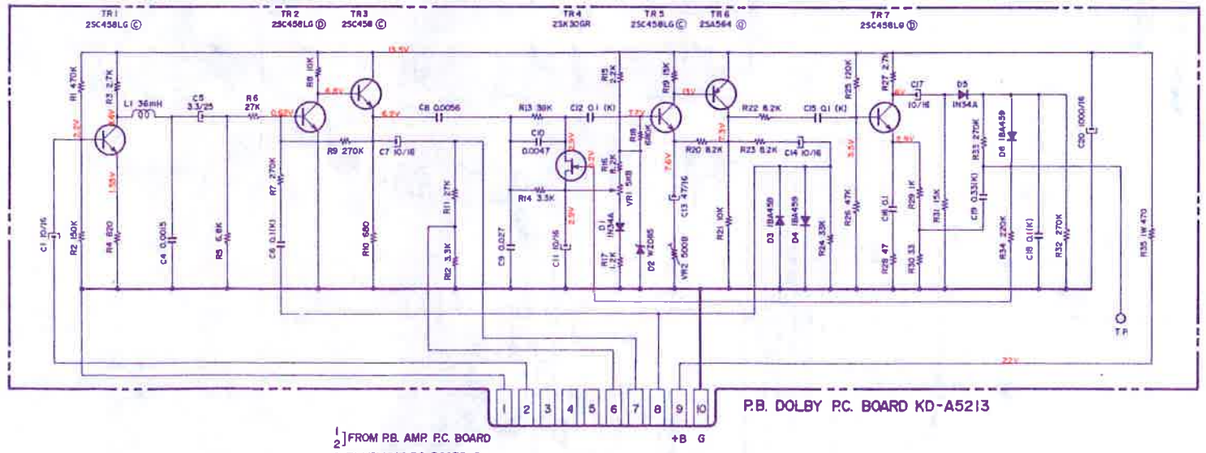

P.B. DOLBY P.C. BOARD KD-A5213

1, 2 FROM P.B. AMP. P.C. BOARD
6 TO VOLUME P.C. BOARD-D
7 TO S.O.S. SWITCH SW1
8 TO DOLBY SWITCH SW3

NOTE
UNLESS OTHERWISE SPECIFIED
ALL RESISTORS IN Ω 1/4W (J)
ALL CAPACITORS IN μF 50WV(J)

GX-285D
SCHEMATIC DIAGRAM
NO.3-3 1460246A
2C

GX-285D

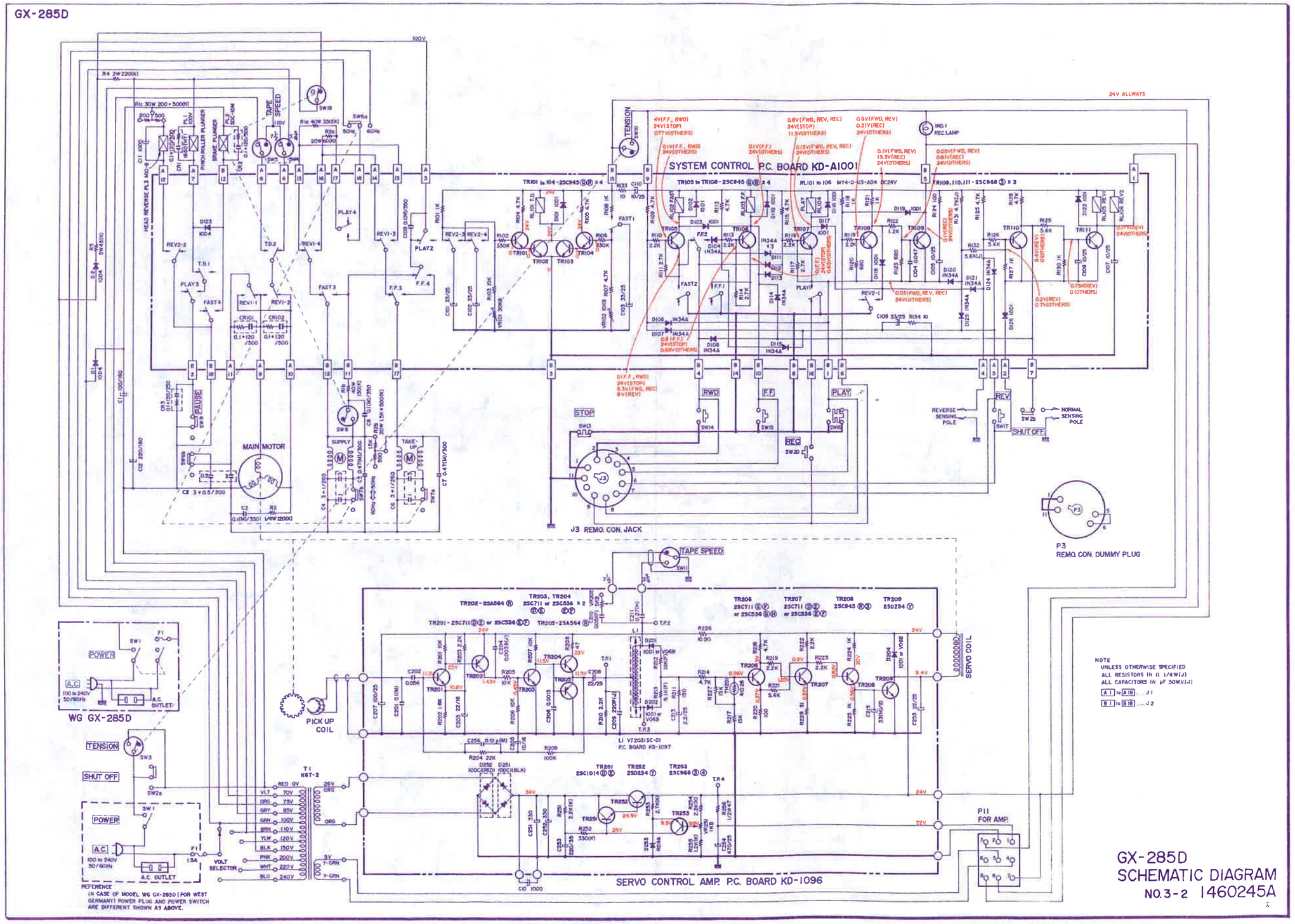

GX-285D
SCHEMATIC DIAGRAM
NO.3-2 1460245A