PARTS LIST

AKAI CASSETTE TAPE RECORDER

MODEL CS-50

ALSO APPLICABLE TO MODEL CS-50D

www.hifiengine.com

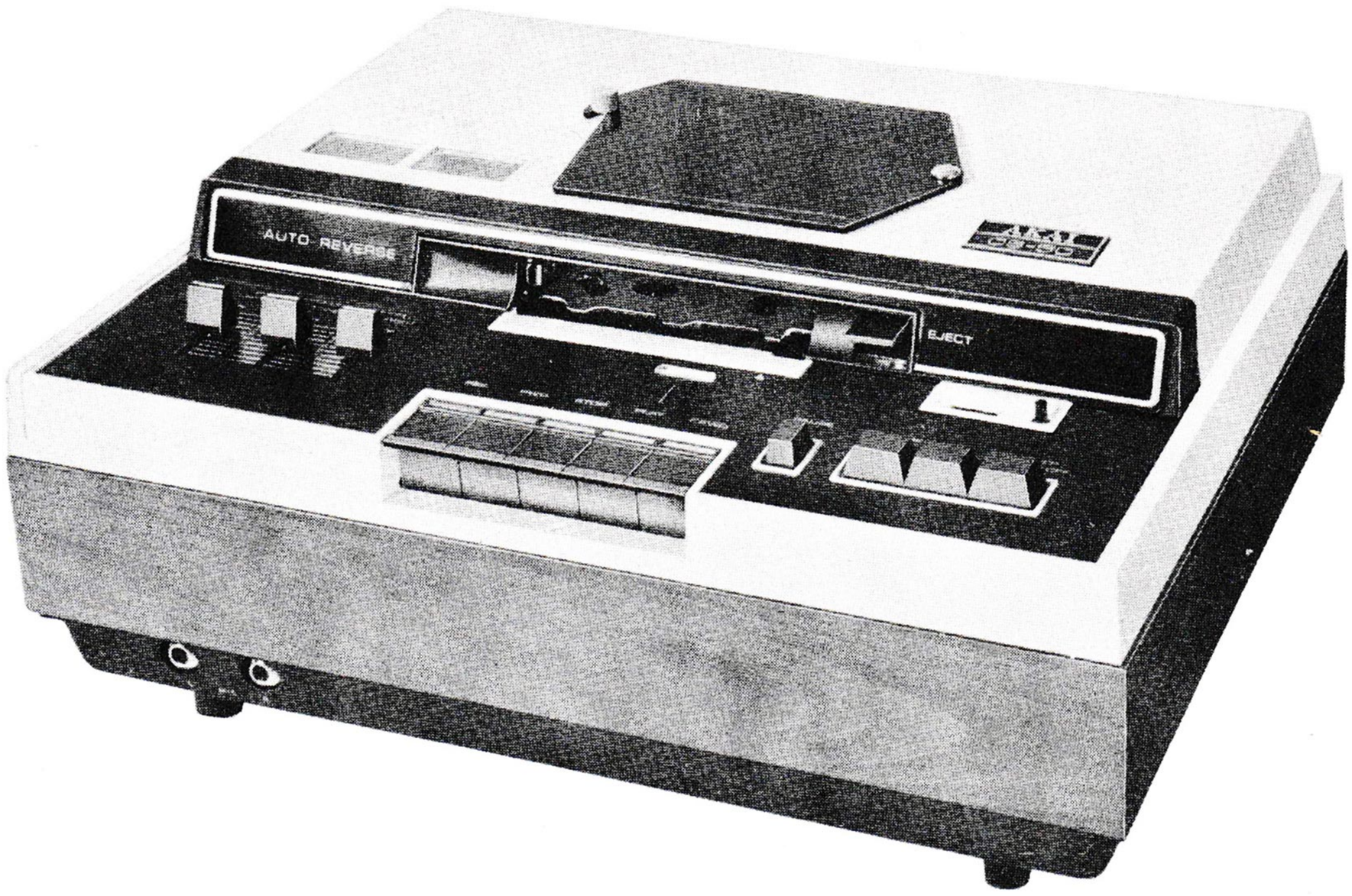

WHEN YOU ORDER THESE PARTS
PLEASE DESCRIBE THEIR PARTS NO.
AND SERIAL NO. IN DETAIL

TABLE OF CONTENTS

CS HEAD BASE BLOCK 3
REEL TABLE FRAME BLOCK 5
MOTOR BLOCK 7
TURN OVER GUIDE BLOCK 8
MECH. BLOCK ASSEMBLY 11
SUB CHASSIS BLOCK (1) 13
SUB CHASSIS BLOCK (2) 14
MECH. FRAME BLOCK (1) 17
MECH. FRAME BLOCK (2) 19
AMP. BLOCK ASSEMBLY 21
MAIN AMP. P.C. BOARD BLOCK (CS-5006) 22
PRE-AMP. P.C. BOARD BLOCK (CS-5028) 23
OSCILLATOR P.C. BOARD BLOCK 24
POWER SOURCE P.C. BOARD (CS-5008) 25
POWER SOURCE P.C. BOARD (CS-5004) 25
ASSEMBLY BLOCK 26

NOTE : *mark shows more than 10 pieces.

www.hifiengine.com

ILLUSTRATION OF HEAD BLOCK

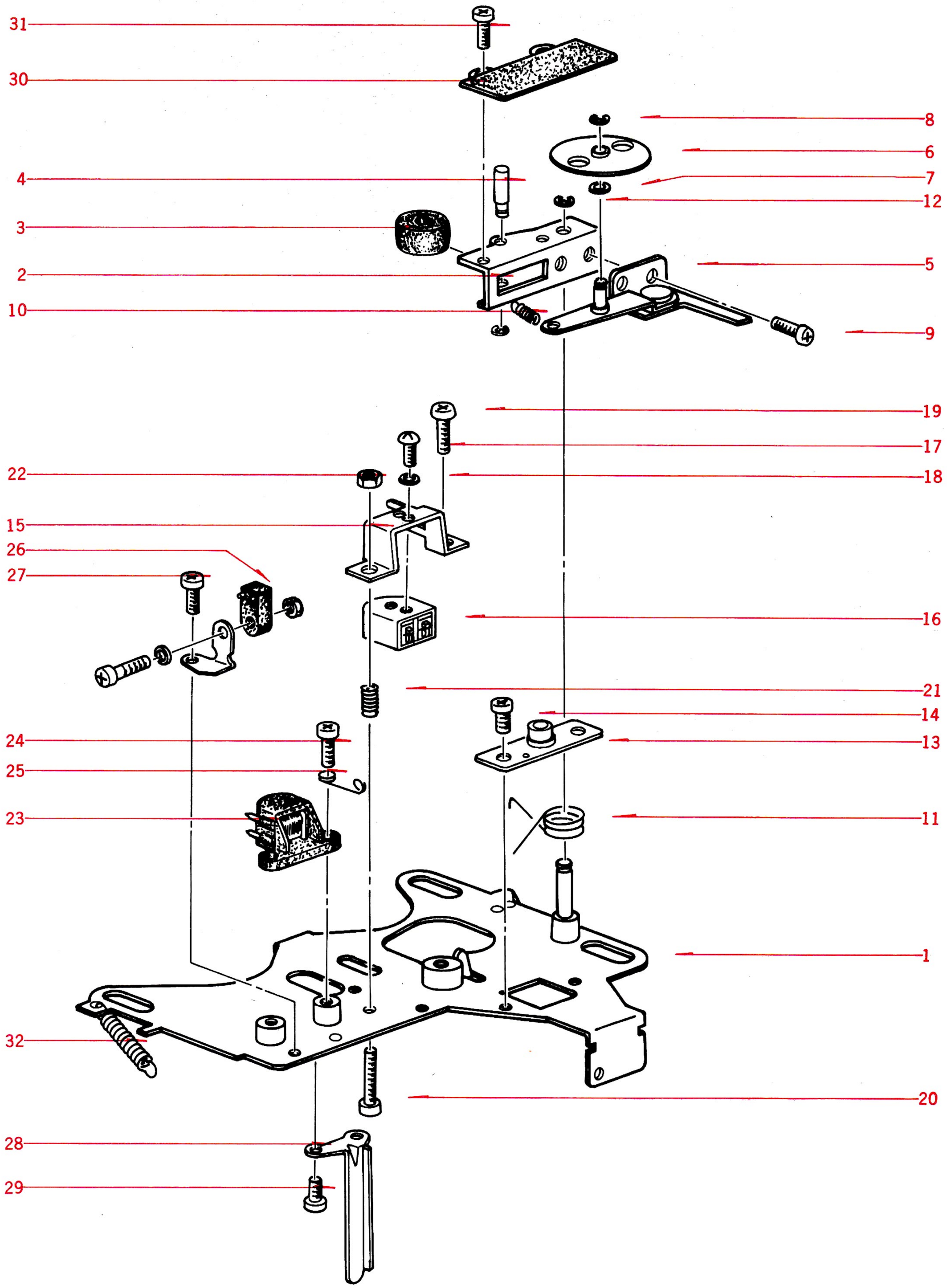

CS HEAD BASE BLOCK

Ref. No.	Parts No.	Description	Schematic No.	Unit Price (US)
–	A-390082	Head Base Block Assy. Comp.	CS	
1	A-385020	Head Base, w/prop	CS-0001	
2	A-387843	Pinch Wheel Arm	CS-0010	
3	A-400397	CS Pinch Wheel	CS-0023	
4	A-389981	Pinch Wheel Shaft	CS-0011	
–	A-391397	"E" Ring 1.2M	6-1-9	
5	A-387854	CDS Disk Table, w/lever	CS-0012	
6	A-389968	CDS Disk, w/metal	CS-0015	
7	A-364342	Washer (Polyslider) 1.7 x 3.2 x 0.25t		
8	A-391397	"E" Ring 1.2M	6-1-9	
9	A-391386	Screw, pan head 2.3 x 3		
10	A-389970	Disk Lever Spring	CS-0018	
11	A-387281	Pinch Wheel Spring	CS-0019	
12	A-270088	"E" Ring 1.9M	6-1-9	
13	A-388506	CDS P.C. Board	CS-0005	
–	A-368921	CDS P-320	45-9-1	
14	A-201903	Screw, binding head 2.3 x 4		
15	A-366625	PC. Tape Guide	RCC-1012	
16	A-364307	REC./PB. HEAD P4-300	701456	
17	A-304841	Screw, round head 2 x 2		
18	A-259380	Washer (BSP) 2.4 x 4.3 x 0.3t		
19	A-391410	Screw, truss head 2.3 x 8		
20	A-399947	Screw, binding head 2.3 x 12		
21	A-402895	CS Angle Adjust Spring	CS-0024	
22	A-273688	M2.3 Nut		
23	A-364318	ERASE HEAD E4-100	701457	
24	A-201003	Screw, truss head 2.3 x 6		
25	A-399071	Head Wiring Hook	CS-0021	
26	A-394356	Ham Backing Coil (small) 220 μHK	23-3-26	
27	A-365940	Screw, binding head 2.3 x 3		
28	A-385064	Micro Switch Push Plate	CS-0006	
29	A-365940	Screw, binding head 2.3 x 3		
30	A-387292	Pilot Mask	CS-0009	
31	A-391386	Screw, pan head 2.3 x 3		
32	A-389992	Head Base Return Spring	CS-0020	

When you order these parts, Please describe their Parts No. and Serial No. in detail

www.hifiengine.com

ILLUSTRATION OF REEL TABLE BLOCK

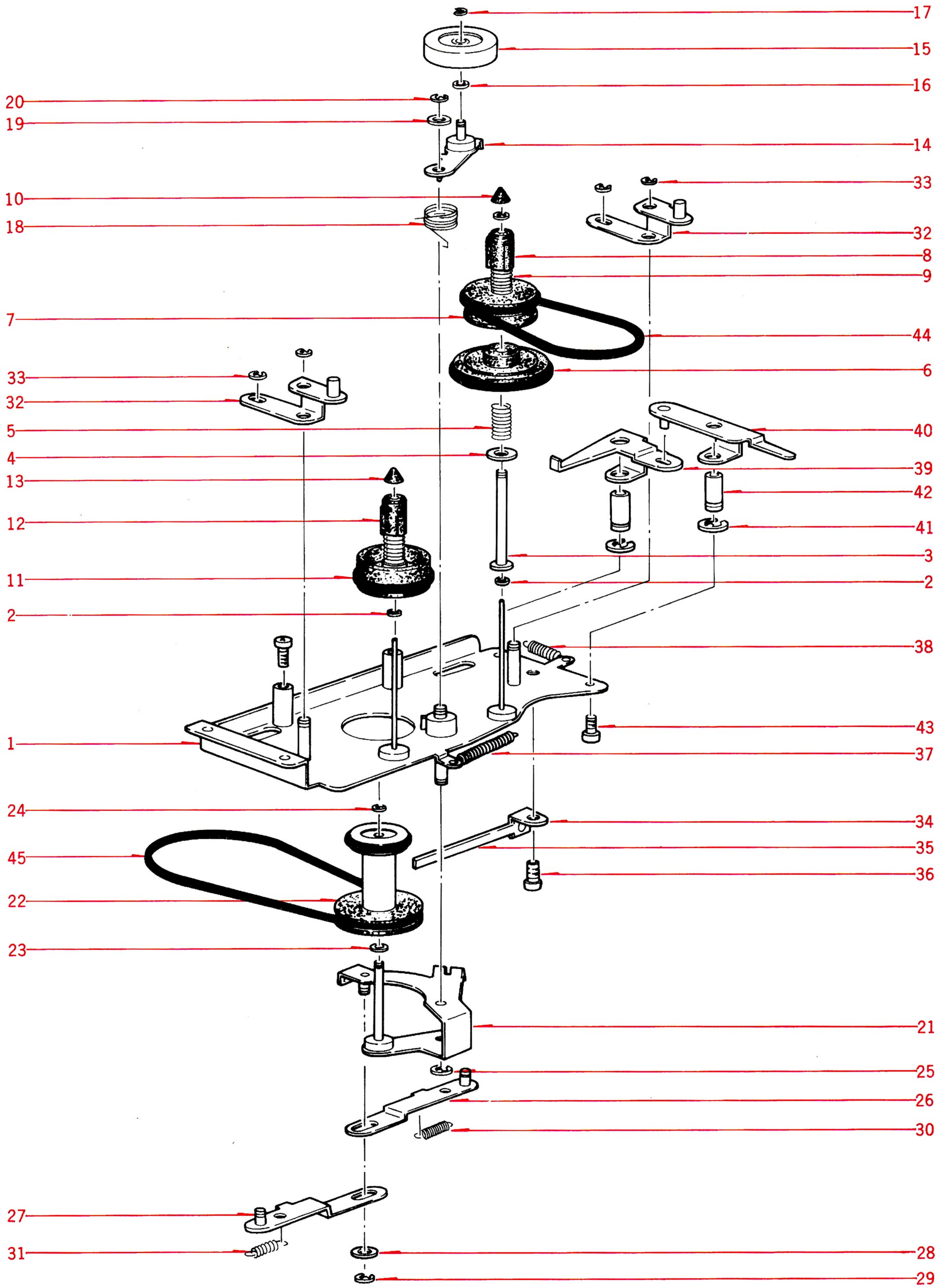

REEL TABLE FRAME BLOCK

Ref. No.	Parts No.	Description	Schematic No.	Unit Price (US)
–	B-390071	Reel Table Frame Assy. Comp.	CS	
1	B-387516	Reel Table Bracket Comp.	CS-2001	
2	B-364342	Washer (Polyslider) 1.7 x 3.2 x 0.25t		
3	B-387573	Take-up Reel Table Shaft	CS-2007	
4	B-355307	Washer (BSP) 2.6 x 6.9 x 0.5t		
5	B-387584	Clutch Spring	CS-2008	
6	B-387595	Take-up Reel Table Pulley Comp.	CS-2009B	
7	B-387617	Clutch Felt	CS-2011	
8	B-387628	Take-up Reel Table Comp.	CS-2012B	
9	B-385075	Reel Table Spring	CS-2014	
–	B-370361	"C" Reel Table Wind	RCC-1345	
–	B-387641	Take-up Reel Table Bush	CS-2015	
–	B-358018	"E" Ring 2.0M	6-1-9	
10	B-394200	Take-up Reel Cap	CS-2105	
11	B-387652	Supply Reel Table Comp.	CS-2016B	
12	B-370361	"C" Reel Table Wind	RCC-1345	
–	B-370348	"C" Reel Table Bush	RCC-1343	
13	B-370372	"C" Reel Table Cap	RCC-1346	
14	B-387663	Middle Pulley B Lever, w/shaft	CS-2017	
15	B-387696	Middle Pulley B, w/metal	CS-2020	
16	B-259334	Washer (Polyslider) 2.05 x 3.5 x 0.25t		
17	B-391421	"E" Ring 1.0M		
18	B-387718	Idler Return Spring	CS-2022	
19	B-259661	Washer (Polyslider) 3 x 5 x 0.25t		
20	B-270088	"E" Ring 1.9M	6-1-9	
21	B-387720	Middle Pulley A Lever, w/shaft	CS-2023	
22	B-387742	Middle Pulley A Comp.	CS-2025B	
23	B-364342	Washer (Polyslider) 1.7 x 3.2 x 0.25t		
24	B-391421	"E" Ring 1.0M		
25	B-270088	"E" Ring 1.9M	6-1-9	
26	B-387775	FF. Lever A, w/pin	CS-2028	
27	B-387786	Rewind Lever A, w/pin	CS-2029	
28	B-318161	Washer (SPC) 3.1 x 8 x 0.5t		
29	B-358018	"E" Ring 2.0M	6-1-9	
30	B-387832	Take-up Spring	CS-2034	
31	B-387821	Rewind Spring	CS-2033	
32	B-387808	Take-up Lever, w/pin	CS-2031	
33	B-270088	"E" Ring 1.9M	6-1-9	
34	B-391274	Spring Bracket, Middle Pulley	CS-2100	
35	B-391285	Plate Spring, Middle Pulley	CS-2101	
36	B-201835	Screw, binding head 3 x 5		
37	B-387178	Idler Tension Spring	CS-1106	
38	B-394378	Return Spring	CS-2106	
39	B-386752	Mask Lever A	CS-1065	
40	B-386763	Mask Lever B, w/pin	CS-1066	
41	B-270123	"E" Ring 4.0M		
42	B-385244	Reel Table Chassis Prop	CS-1018	
43	B-356668	Screw, binding head 2.3 x 4		
44	B-387101	Counter Belt	CS-1099	
45	B-387235	Take-up Pulley Belt	CS-1112	

When you order these parts, Please describe their Parts No. and Serial No. in detail

www.hifiengine.com

TURN OVER GUIDE BLOCK

Ref. No.	Parts No.	Description	Schematic No.	Unit Price (US)
–	D-390148	Turn Over Guide Assy. Comp.	CS	
1	D-388642	Slide Base, w/shaft & bracket	CS-2057, 9	
2	D-388708	Control Lever	CS-2063	
3	D-290283	"U" Ring 2.85M	6-1-1	
4	D-392848	Control Lever Spring	CS-2102	
5	D-402401	Lock	CS-2060	
6	D-388686	Lock Pin	CS-2061	
7	D-356657	"E" Ring 1.5M	6-1-9	
8	D-388697	Roller Guide	CS-2062	
9	D-395695	Screw, countersunk head 2.6 x 5		
10	D-357658	M2.6 Nut		
11	D-404886	Caset Brake	CS-2116	
12	D-388912	Guide Plate	CS-2076	
13	D-391386	Screw, pan head 2.3 x 3		
14	D-399148	Screw, countersunk head 2 x 3		
–	D-390150	Turn Over Block Assy. Comp.		
15	D-202397	Screw, round head 3 x 10		
16	D-408420	Branch Stopper	CS-2117	
17	D-387393	Drive Gear Bracket	CS-1130	
18	D-387483	TO. Drive Gear Shaft Plate, w/shaft	CS-1143	
19	D-202138	Screw, binding head 3 x 6 w/washer		
20	D-387404	Turn Over Drive Gear, w/metal	CS-1131	
21	D-270123	"E" Ring 4.0M	6-1-9	
22	D-202138	Screw, binding head 3 x 6 w/washer		
23	D-326463	Washer (PBP) 5.1 x 10.3 x 0.2t		
24	D-313593	Washer (PBP) 5.1 x 10.3 x 0.5t		
25	D-402996	Joint Stay B, w/shaft & roller	CS-2114	
26	D-403075	Taper Roller A	CS-2108	
27	D-403086	Taper Roller B	CS-2109	
28	D-402985	Taper Roller Spring	CS-2112	
29	D-402974	Taper Roller Shaft	CS-2111	
30	D-273745	Spring Washer M3		
31	D-273756	M3.0 Nut		
32	D-386662	Cam Roller	CS-1056	
33	D-290283	"U" Ring 2.85M	6-1-1	
34	D-388710	Caset Supporting	CS-2064	
35	D-388776	Guide Roller Supporting Plate, w/pin	CS-2093	
36	D-270022	Steel Ball 4mm		
37	D-405270	Ball Spring	CS-2118	
38	D-365940	Screw, binding head 2.3 x 3		
39	D-388866	Hook	CS-2072	
40	D-388787	Caset Hook Pin	CS-2094	
41	D-388890	Hook Spring	CS-2074	
42	D-273688	M2.3 Nut		
43	D-270101	"E" Ring 3.0M	6-1-9	
44	D-388732	Guide Roller	CS-2066	
45	D-202083	Screw, binding head 3 x 5 w/washer		
46	D-388901	Turn Over Guide	CS-2075	
47	D-391386	Screw, pan head 2.3 x 3		
–	D-390150	Turn Over Block Assy. Comp.		
48	D-388923	Turn Over Branch Comp.	CS-2077	
49	D-399137	Washer (PBP) 5.1 x 10.3 x 0.25t		
50	D-326463	Washer (PBP) 5.1 x 10.3 x 0.2t		
51	D-388967	Turn Over Gear	CS-2081	
52	D-391476	Set Screw (hexagon socket) 4 x 4		
53	D-388978	Turn Over Bracket	CS-2082	
54	D-388980	Turn Over Shaft Supporting Plate	CS-2091	
55	D-201835	Screw, binding head 3 x 5		
56	D-290283	"U" Ring 2.85M	6-1-1	
57	D-387448	Turn Over Return Spring	CS-1135	

When you order these parts, Please describe their Parts No. and Serial No. in detail

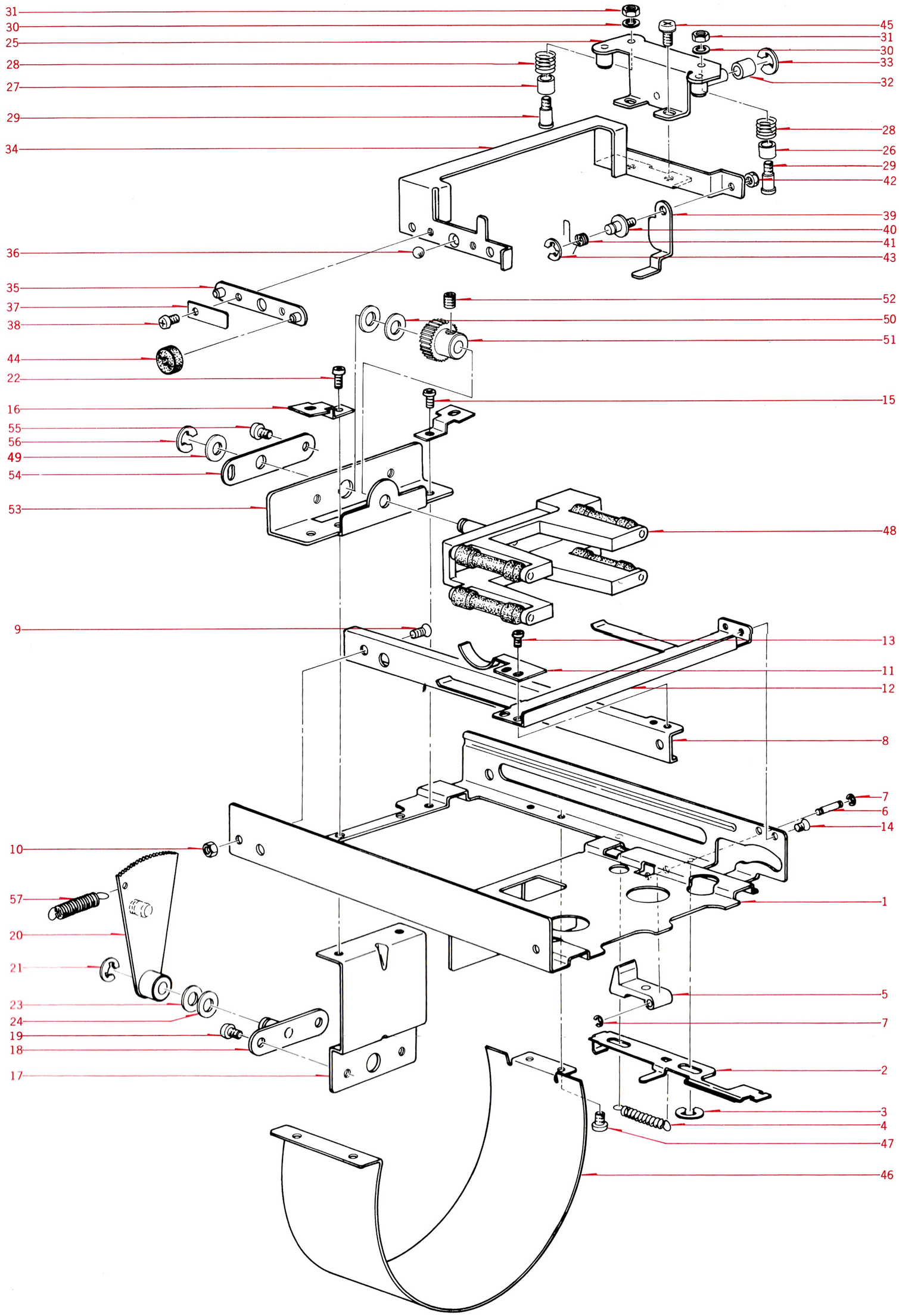
31
30
25
28
27
29
34
36
35
37
38
44
22
16
55
56
49
54
53
9
10
57
20
21
23
24
19
18
17
45
31
30
33
32
28
26
29
42
39
40
41
43
52
50
51
15
48
13
11
12
8
7
6
14
1
5
7
2
3
4
47
46

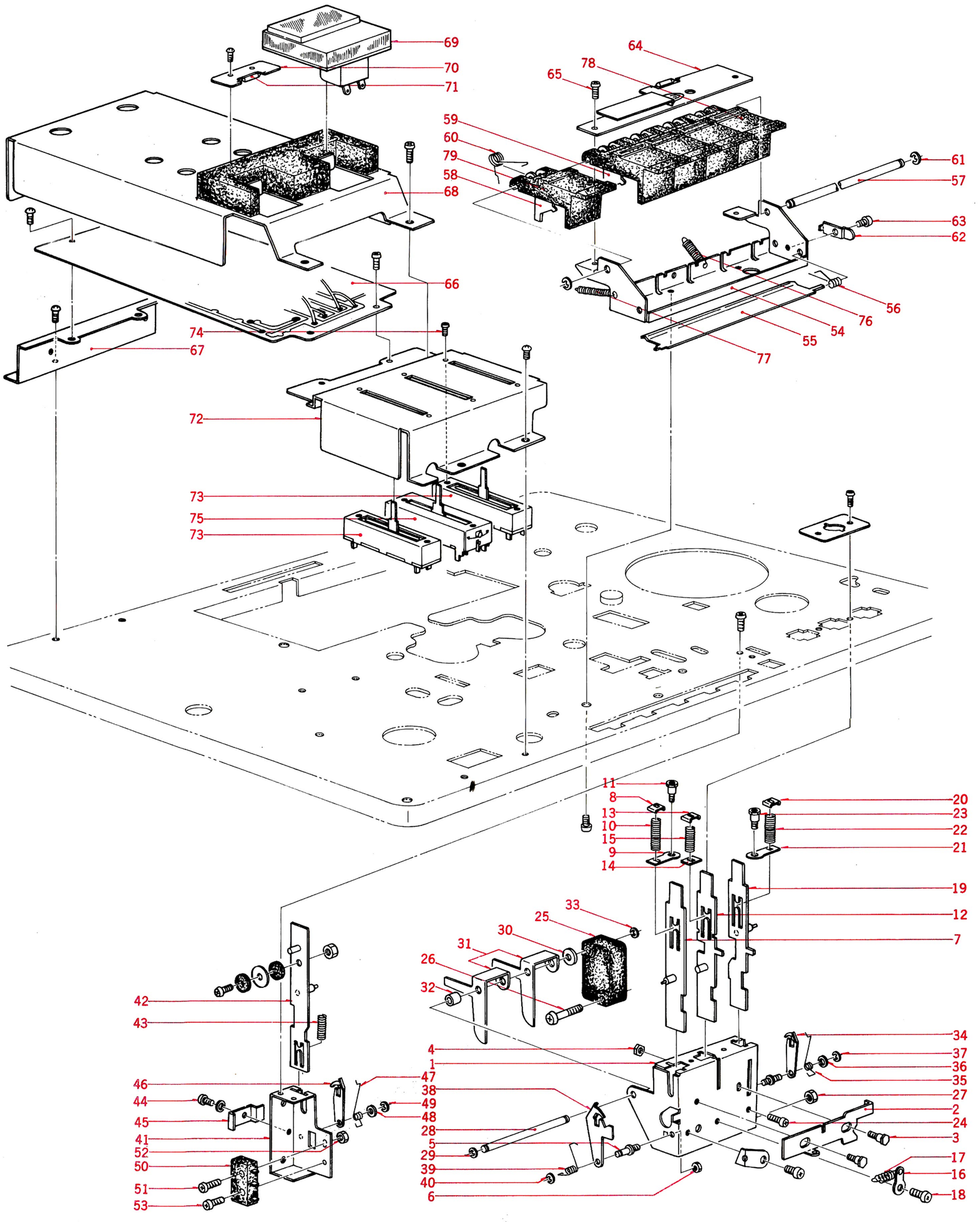
69
70
71
64
78
65
59
60
79
58
68
61
57
63
62
66
56
76
54
55
77
74
67
72
73
75
73
11
8
13
10
15
9
14
20
23
22
21
19
12
7
33
25
30
31
26
32
42
43
34
37
36
35
4
1
47
38
49
48
27
2
24
3
46
44
45
41
52
50
51
53
28
5
29
39
40
6
17
16
18

MECH. BLOCK ASSEMBLY

Ref. No.	Parts No.	Description	Schematic No.	Unit Price (US)
		FUNCTION BUTTON BLOCK		
–	E-390137	Function Button Assy. Comp.	CS	
1	E-387933	Function Button Holder	CS-2038	
2	E-388045	Auto Stop Lever	CS-2049	
3	E-385874	Set Screw (Graduated head)	CS-2529A	
4	E-373688	M2.3 Nut		
5	E-388811	Function Button Lock Shaft	CS-2097	
6	E-421288	M2.0 Nut		
7	E-387944	Auto Push Button Lever	CS-2039	
8	E-391206	Spring Plate B	CS-2054B	
9	E-391217	Power Push Button Spring Plate	CS-2054A	
10	E-388620	Function Spring A	CS-2055	
11	E-202138	Screw, binding head 3 x 5 w/washer		
12	E-387966	Manual Push Button Lever	CS-2041	
13	E-391206	Spring Plate B	CS-2054B	
14	E-388618	Spring Plate	CS-2054	
15	E-388607	Function Spring B	CS-2053	
16	E-273778	Earth Lug M3		
17	E-385986	Safety Lever Return Spring	CS-2539	
18	E-201835	Screw, binding head 3 x 5		
19	E-387977	Power Push Button Lever	CS-2042	
20	E-391206	Spring Plate B	CS-2054B	
21	E-391217	Power Push Button Spring Plate	CS-2054A	
22	E-388620	Function Spring A	CS-2055	
23	E-201835	Screw, binding head 3 x 5		
24	E-202083	Screw, binding head 3 x 5 w/washer		
25	E-250064	Micro Switch V-1A44	25-1-7	
26	E-201993	Screw, binding head 3 x 15		
27	E-273756	M3.0 Nut		
28	E-388056	Actuater Lever Shaft	CS-2050	
29	E-270088	"E" Ring 1.9M	6-1-9	
30	E-365984	Washer (Nylon) 3.1 x 8 x 1.5t		
31	E-400735	Actuater Lever B	CS-2107	
32	E-388585	Coller A	CS-2052	
33	E-270088	"E" Ring 1.9M	6-1-9	
34	E-387990	Switch Lock Cam	CS-2044	
35	E-388034	Button Lock Spring	CS-2048	
36	E-388023	Function Button Lock Washer	CS-2047	
37	E-358018	"E" Ring 2.0M	6-1-9	
38	E-388001	Auto Lever Lock Plate	CS-2045	
39	E-388034	Button Lock Spring	CS-2048	
40	E-358018	"E" Ring 2.0M	6-1-9	
		POSE BUTTON BLOCK		
–	E-390126	Pose Button Comp.	CS	
41	E-387900	Pose Bracket	CS-2035	
42	E-387911	Pose Lever E, w/shaft	CS-2036	
43	E-387922	Pose Button Spring	CS-2037	
44	E-202083	Screw, binding head 3 x 5 w/washer		
45	E-403007	Pose Lock Guide Plate	CS-2115	
46	E-387990	Switch Lock Cam	CS-2044	
47	E-388034	Button Lock Spring	CS-2048	
48	E-388023	Function Button Washer	CS-2047	
49	E-358018	"E" Ring 2.0M	6-1-9	
50	E-389700	Micro Switch SS-5	25-1-19	
51	E-201868	Screw, binding head 2.3 x 10		
52	E-273688	M2.3 Nut		
53	E-356714	Screw, binding head 2.3 x 8		
		KEYBOARD BLOCK		
–	E-390104	Keyboard Block Comp.	CS	
54	E-386313	Keyboard Holder	CS-3009	
55	E-386291	Keyboard Lock Plate	CS-3007	
56	E-386245	Keyboard Lock Spring	CS-3002	
57	E-386302	Keyboard Shaft	CS-3008	
58	E-386278	Keyboard Lock Plate A	CS-3005	
59	E-386280	Keyboard Stopper Plate B	CS-3006	
60	E-386267	Keyboard Return Spring	CS-3004	
61	E-270088	"E" Ring 1.9M	6-1-9	
62	E-394334	Lock Plate Stopper	CS-3013	
63	E-201835	Screw, binding head 3 x 5		
64	E-388563	Head P.C. Board B	CS-1119	
–	E-395312	Lamp #2 8V 0.2A	28-2-8	
65	E-391386	Screw, pan head 2.3 x 3		
		PRE-AMP. BLOCK		
66	E-390317	Pre-Amp. P.C. Board Assy. Comp.	CS-5028	
67	E-388438	P.C. Board Angle	CS-5025	
68	E-388541	Amp. Shield Plate	CS-1137	
69	E-389518	VU Meter MG-20	46-1-29	
70	E-388574	Lamp P.C. Board	CS-1138	
71	E-295312	Lamp #2 8V 0.2A	28-2-8	
		VOLUME MOUNTING PLATE BLOCK		
–	E-390295	Volume Mounting Plate Comp.	CSA	
–	E-390306	Volume Mounting Plate Comp. (Deck)	CSD	
72	E-388440	Volume Mounting Plate	CS-5026	
73	E-405494	Slide Volume LF13A201-50KA	36-16-3	
74	E-375107	Screw, pan head 2.6 x 4		
75	E-405505	Slide Volume MF13A001-100K(B) x 2	36-21-2	
–	E-273778	Earth Lug M3		
–	E-200687	Tapping Screw #2 3 x 6		
76	E-386335	Stop Lever Spring	CS-3011	
77	E-386932	Auto Stop Spring	CS-1083	
78	E-386256	Keyboard Knob (white line)	CS-3003	
79	E-386256	Keyboard Knob (red line)	CS-3003	

When you order these parts, Please describe their Parts No. and Serial No. in detail

www.hifiengine.com

SUB CHASSIS BLOCK (2)

Ref. No.	Parts No.	Description	Schematic No.	Unit Price (US)
–	G-390161	Sub Chassis Assy. Comp.	CS	
1	G-385604	Sub Chassis, w/shaft	CS-2501	
–	G-273778	Earth Lug M3		
–	G-200687	Tapping Screw #2 3 x 6		
2	G-391566	Plunger Solenoid M10-C-34V	44-1-32	
3	G-257477	Conjunction Pin	RD-211	
4	G-270088	"E" Ring 1.9M	6-1-9	
5	G-202083	Screw, binding head 3 x 5 w/washer		
6	G-385896	Plunger Lever, w/pin	CS-2530	
7	G-290283	"U" Ring 2.85M		
8	G-385863	Auto Change Lever F	CS-2528	
9	G-259738	Washer (Polyslider) 4.1 x 7 x 0.25t		
10	G-270101	"E" Ring 3.0M	6-1-9	
11	G-385751	Auto Change Lever B, w/pin	CS-2516	
12	G-290283	"U" Ring 2.85M	6-1-1	
13	G-385740	Manual Lever, w/pin	CS-2515	
14	G-290283	"U" Ring 2.85M	6-1-1	
15	G-385762	Auto change Lever C, w/lever D	CS-2517, 8	
16	G-290283	"U" Ring 2.85M	6-1-1	
17	G-385806	Auto change Lever E, w/start spring	CS-2521, 2	
18	G-385828	Auto Play Lever B, w/pin	CS-2523	
19	G-314717	MR Set Screw	MR-254	
20	G-273756	M3.0 Nut		
21	G-340672	Screw, XR Idler Lever	XR-370	
22	G-385830	Auto Play Lever A, w/roller	CS-2524, 5	
23	G-290283	"U" Ring 2.85M	6-1-1	
24	G-385841	Auto Change Lever A	CS-2526	
25	G-385442	Washer (Hylon) 4.2 x 9 x 1.0t		
26	G-290283	"U" Ring 2.85M	6-1-1	
27	G-385637	Lower Cover Prop	CS-2504	
28	G-202083	Screw, binding head 3 x 5 w/washer		
29	G-385920	Auto Stop Lever	CS-2533	
30	G-290283	"U" Ring 2.85M		
31	G-386223	Pinion Lever Stopper	CS-2563	
32	G-201835	Screw, binding head 3 x 5		
33	G-386201	Pinion Lever	CS-2561	
34	G-290283	"U" Ring 2.85M	6-1-1	
35	G-385661	Speed Reducing Pulley Holder	CS-2507	
36	G-355498	Screw, pan head 3 x 4		
–	G-376380	Washer (Polyslider) 5.1 x 10.3 x 0.13t		
–	G-390172	Belt Change Block Comp.	CS	
37	G-201835	Screw, binding head 3 x 5		
38	G-385795	Auto Play Spring	CS-2520	
39	G-385986	Safety Lever Return Spring	CS-2539	
40	G-392837	Lever F Return Spring	CS-2525	
41	G-387077	Eject Spring	CS-1096	
42	G-392804	Lever E Return Spring,	CS-2566	
43	G-392837	Lever F Return Spring	CS-2525	
44	G-385918	Stop Spoke	CS-2532	
45	G-273688	M2.3 Nut		
46	G-290283	"U" Ring 2.85M	6-1-1	
47	G-385683	Pinion Shaft, w/gear	CS-2509	
48	G-385672	Speed Reducing Metal	CS-2508	
49	G-385705	Speed Reducing Pulley A	CS-2511	
50	G-355498	Screw, pan head 3 x 4		
–	G-259773	Washer (Nylon) 4.1 x 7 x 0.5t		
51	G-385727	Speed Reducing Shaft A, w/pulley B	CS-2512, 3	
52	G-385672	Speed Reducing Metal	CS-2508	
53	G-259738	Washer (Polyslider) 4.1 x 7 x 0.25t		
54	G-270101	"E" Ring 3.0M	6-1-9	
55	G-385705	Speed Reducing Pulley A	CS-2511	
56	G-355498	Screw, pan head 3 x 4		
57	G-399813	Speed Reducing Pulley Belt B	CS-1121	
–	G-390172	Belt Change Block Comp.	CS	
58	G-386100	Belt Change Chassis, w/metal	CS-2552	
59	G-386144	Belt Change Shaft, w/lever	CS-2555	
60	G-386188	Belt Change Roller	CS-2559	
61	G-386190	Belt Change Spring	CS-2560	
62	G-386133	Belt Change Cam	CS-2554	
63	G-201756	Screw, pan head 4 x 6		
64	G-273960	M4.0 Nut		
65	G-386122	Belt Change Guide	CS-2553	
66	G-201835	Screw, binding head 3 x 5		
67	G-387303	Speed Reducing Pulley Belt A	CS-1121	

When you order these parts, Please describe their Parts No. and Serial No. in detail

www.hifiengine.com

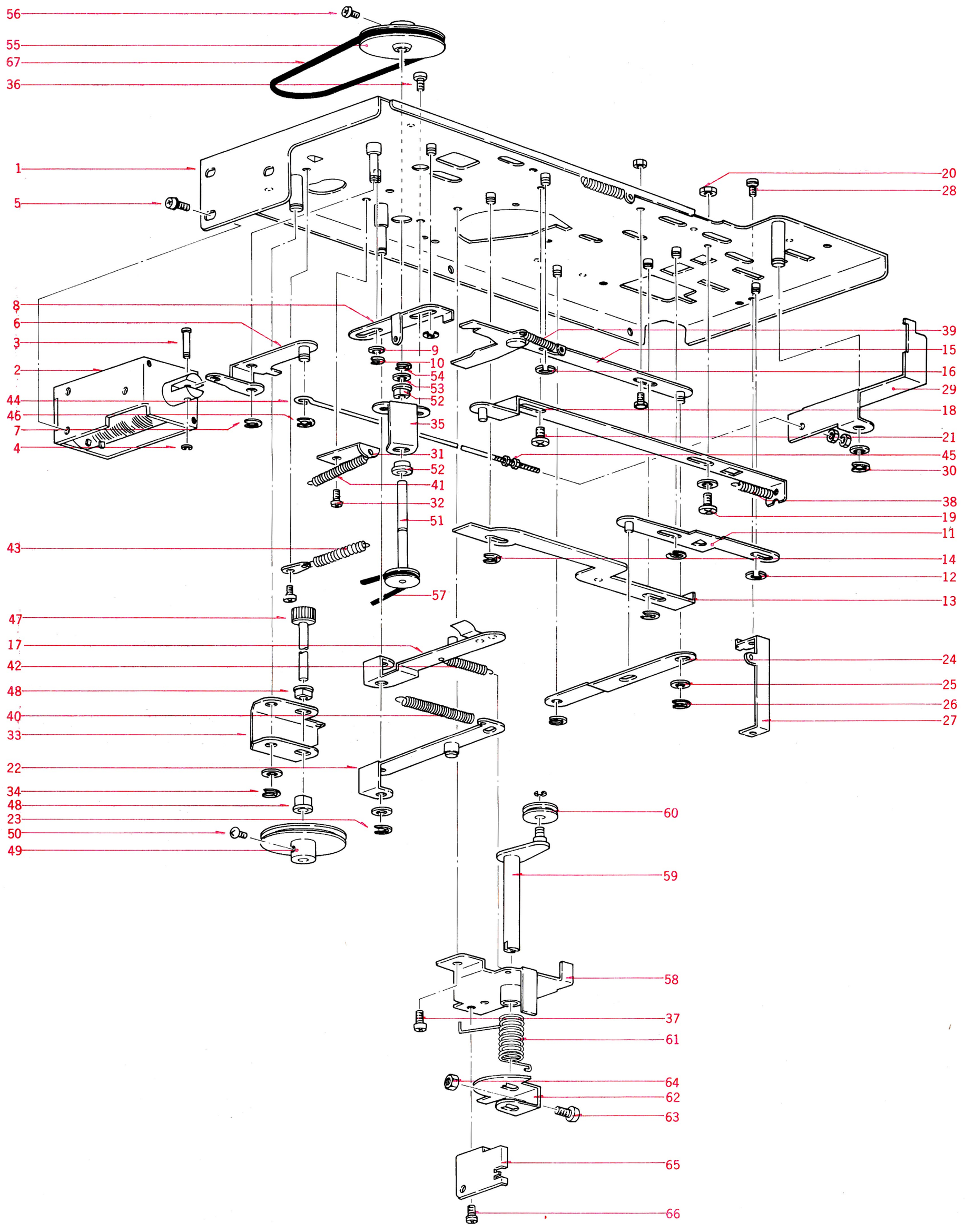
56
55
67
36
1
5
8
6
3
2
44
46
7
4
9
10
54
53
52
35
31
52
41
32
51
43
57
47
17
42
48
40
33
22
34
48
23
50
49
20
28
39
15
16
29
18
21
45
30
38
19
11
14
12
13
24
25
26
27
60
59
58
37
61
64
62
63
65
66

MECH. FRAME (1)

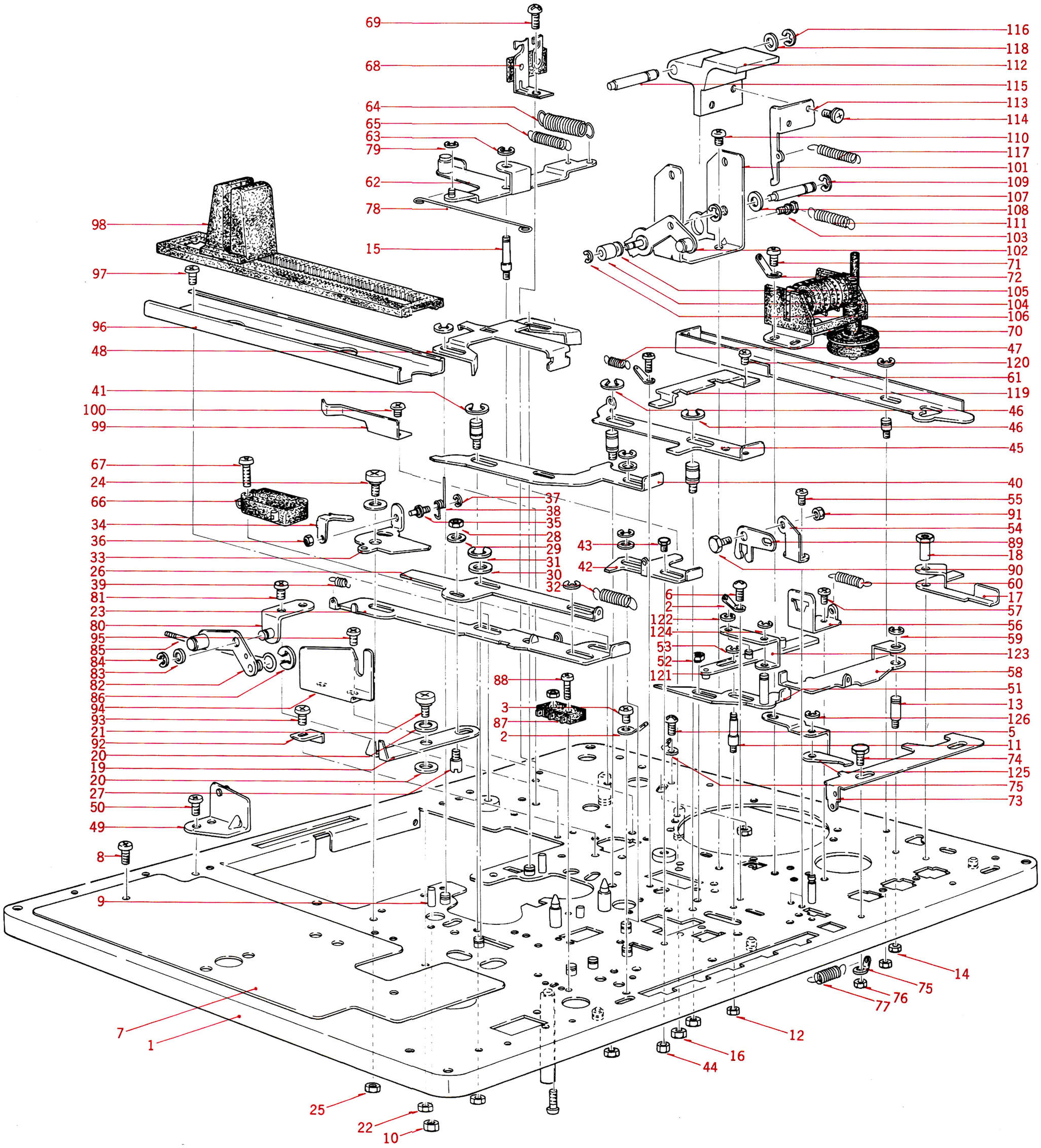
69
68
64
65
63
79
62
78
15
98
97
96
48
41
100
99
67
24
66
34
36
33
26
39
81
23
80
95
85
84
83
82
86
94
93
21
92
20
19
20
27
50
49
8
9
7
1
37
38
35
28
29
31
30
32
43
42
88
3
87
2
6
2
122
124
53
52
121
116
118
112
115
113
114
110
117
101
109
107
108
111
103
102
71
72
105
104
106
70
47
120
61
119
46
46
45
40
55
91
54
89
18
90
60
17
57
56
59
123
58
51
13
126
5
11
74
125
75
73
14
75
76
77
12
16
44
25
22
10

MECH. FRAME BLOCK (1)

Ref. No.	Parts No.	Description	Schematic No.	Unit Price (US)
1	H-385086	Mech. Frame Comp.	CS-1001	
2	H-273778	Earth Lug M3		
3	H-200687	Tapping Screw #2 3 x 6		
4	H-273633	Earth Lug M2.3		
5	H-391386	Screw, pan head 2.3 x 3		
6	H-338635	Screw, round head 3 x 3		
7	H-389722	Frame Shield Plate	CS-1136	
8	H-200687	Tapping Screw #2 3 x 6		
9	H-385108	Cassette Stop Pin B	CS-1003	
10	H-273756	M3 Nut		
11	H-385165	Pose Lever Shaft B	CS-1009	
12	H-273688	M2.3 Nut		
13	H-385312	Eject Safety Lever Shaft	CS-1024B	
14	H-273688	M2.3 Nut		
15	H-385176	Auto Stop Lever Shaft B	CS-1010	
16	H-273756	M3 Nut		
17	H-385378	Safety Lever	CS-1030	
18	H-385380	Safety Lever Shaft	CS-1030B	
19	H-385492	Rec. Lever	CS-1041	
20	H-374545	Washer (PBP) 5.1 x 10.3 x 0.4t		
21	H-314717	MR Set Screw	MR-254	
22	H-273756	M3 Nut		
23	H-385514	Rec. Lever A	CS-1042	
24	H-385874	Set Screw (Graduated head)	CS-2529A	
25	H-273688	M2.3 Nut		
26	H-385525	Rec. Lever B	CS-1043	
27	H-385503	Rec. Lever Pin	CS-1041B	
28	H-391500	Washer (PBP) 3.1 x 7.9 x 0.5t		
29	H-273756	M3 Nut		
30	H-259931	Washer (PBP) 5.1 x 10.3 x 0.3t		
31	H-290283	"U" Ring 2.85M	6-1-1	
32	H-292826	Rec. Lever B Return Spring	CS-1147	
33	H-385536	Rec. Safety Lever	CS-1044	
34	H-385547	Rec. Safety Chip	CS-1045	
35	H-385558	Rec. Safety Chip Shaft	CS-1046	
36	H-273734	M2 Nut		
37	H-385560	Rec. Safety Chip Spring	CS-1047	
38	H-358018	"E" Ring 2.0M	6-1-9	
39	H-385571	Rec. Safety Spring B	CS-1048	
–	H-207314	Amp. Lever Set Screw	3A-737	
40	H-385468	Rewind Lever B	CS-1038	
–	H-385474	Set Screw (Graduated head)	CS-2529A	
41	H-290283	"U" Ring 2.85M	6-1-1	
42	H-385424	Stop Lever	CS-1034	
43	H-385874	Set Screw (Graduated head)	CS-2529A	
44	H-273688	M2.3 Nut		
45	H-385446	Take-up Lever B	CS-1036	
46	H-290283	"U" Ring 2.85M	6-1-1	
47	H-385457	FF Lever Return Spring	CS-1037	
48	H-385470	Brake Lever C	CS-1039	
–	H-385874	Set Screw (Graduated head)	CS-2529A	
–	H-273688	M2.3 Nut		
49	H-387371	Stand, w/shaft	CS-1128	
50	H-201835	Screw, binding head 3 x 5		
51	H-385277	Pose Lever C, w/shaft	CS-1021	
–	H-385266	Take-up Pulley Lever Shaft	CS-1020	
52	H-385356	Graduated Nut	CS-1028	
53	H-290283	"U" Ring 2.85M	6-1-1	
54	H-385345	Pose Lever Bracket B	CS-1027	
55	H-356668	Screw, binding head 2.3 x 4		
56	H-385290	Pose Lever Bracket A	CS-1023	
57	H-356668	Screw, binding head 2.3 x 4		
58	H-385301	Eject Safety Lever	CS-1024	
59	H-270101	"E" Ring 3.0M	6-1-9	
60	H-385323	Eject Safety Spring	CS-1025	
61	H-386910	Auto Stop Lever E	CS-1081	
62	H-386921	Auto Stop Lever, w/roller	CS-1082	
63	H-290283	"U" Ring 2.85M	6-1-1	
64	H-405257	Auto Stop Spring C	CS-1159	
65	H-389992	Head Table Return Spring	CS-0020	
66	H-250064	Micro Switch V-1A44	25-1-7	
67	H-201971	Screw, binding head 3 x 12		
–	H-201993	Screw, binding head 3 x 15		
–	H-273756	M3 Nut		
68	H-254924	Lug Plate KPL1	33-3-1	
69	H-200687	Tapping Screw #2 3 x 6		
–	H-341842	MP Capacitor 0.47 μF 300WV	24-9-35	
70	H-389711	Counter MP-390-43	9-1-12	
71	H-201835	Screw, binding head 3 x 5		
72	H-273778	Earth Lug M3		
73	H-286627	Safety Lever B	CS-1052	
74	H-385874	Set Screw (Graduated head)	CS-2529A	
75	H-273633	Earth Lug M2.3		
76	H-273688	M2.3 Nut		
77	H-392815	Safety Lever B Return Spring	CS-1146	
78	H-386943	Spork	CS-1084	
79	H-270088	"E" Ring 1.9M	6-1-9	
80	H-386853	Lift Bracket, w/shaft	CS-1076	
81	H-201835	Screw, binding head 3 x 5		
82	H-386875	Lift Lever, w/roller	CS-1077	
83	H-322525	Washer (PBP) 4.1 x 7 x 0.2t		
84	H-270101	"E" Ring 3.0M	6-1-9	
85	H-386842	Lift Rod	CS-1075	
86	H-290283	"U" Ring 2.85M	6-1-1	
87	H-389700	Micro Switch SS-5	25-1-19	
88	H-201868	Screw, binding head 2.3 x 10		
89	H-356669	Pose Lever D	CS-1026	
90	H-385874	Set Screw (Graduated head)	CS-2529A	
91	H-273688	M2.3 Nut		
92	H-386897	Pinion Stopper	CS-1079	
93	H-201835	Screw, binding head 3 x 5		
94	H-386908	Setting Plate	CS-1080	
95	H-201835	Screw, binding head 3 x 5		
96	H-387347	Guide Rail	CS-1125	
97	H-201835	Screw, binding head 3 x 5		
98	H-387358	Slide Rack	CS-1126	
99	H-387360	Rack Stopper	CS-1127	
100	H-201868	Screw, binding head 2.3 x 10		
101	H-386987	Eject Stand	CS-1088	
102	H-387000	Set Lever, w/pin	CS-1090	
103	H-387011	Set Spring Hook	CS-1090B	
104	H-387033	Set Roller	CS-1092	
105	H-317171	Washer (PBP) 3.1 x 8 x 0.1t		
106	H-270088	"E" Ring 1.9M	6-1-9	
107	H-386998	Set Lever Pin	CS-1089	
108	H-420682	Washer (Nylon) 4.2 x 9 x 0.5t		
109	H-270101	"E" Ring 3.0M	6-1-9	
110	H-202645	Screw, round head 3 x 3		
111	H-404921	Eject Spring B	CS-1158	
112	H-387055	Eject Button	CS-1094	
113	H-387066	Eject Lever	CS-1095	
114	H-202083	Screw, binding head 3 x 5 w/washer		
115	H-387044	Eject Button Shaft	CS-1093	
116	H-270101	"E" Ring 3.0M	6-1-9	
117	H-392804	Auto Change Lever E Return Spring	CS-2566	
118	H-420682	Washer (Nylon) 4.2 x 9 x 0.5t		
119	H-387270	Brake Lever A	CS-1117	
120	H-356668	Screw, binding head 2.3 x 4		
121	H-387314	Pose Lever A, w/pin	CS-1122	
122	H-270088	"E" Ring 1.9M	6-1-9	
123	H-387325	Pose Lever B	CS-1123	
124	H-270088	"E" Ring 1.9M	6-1-9	
125	H-387336	Manual Safety Lever	CS-1124	
126	H-270088	"E" Ring 1.9M	6-1-9	

When you order these parts, Please describe their Parts No and Serial No. in detail

ILLUSTRATION OF MECH. FRAME (2)

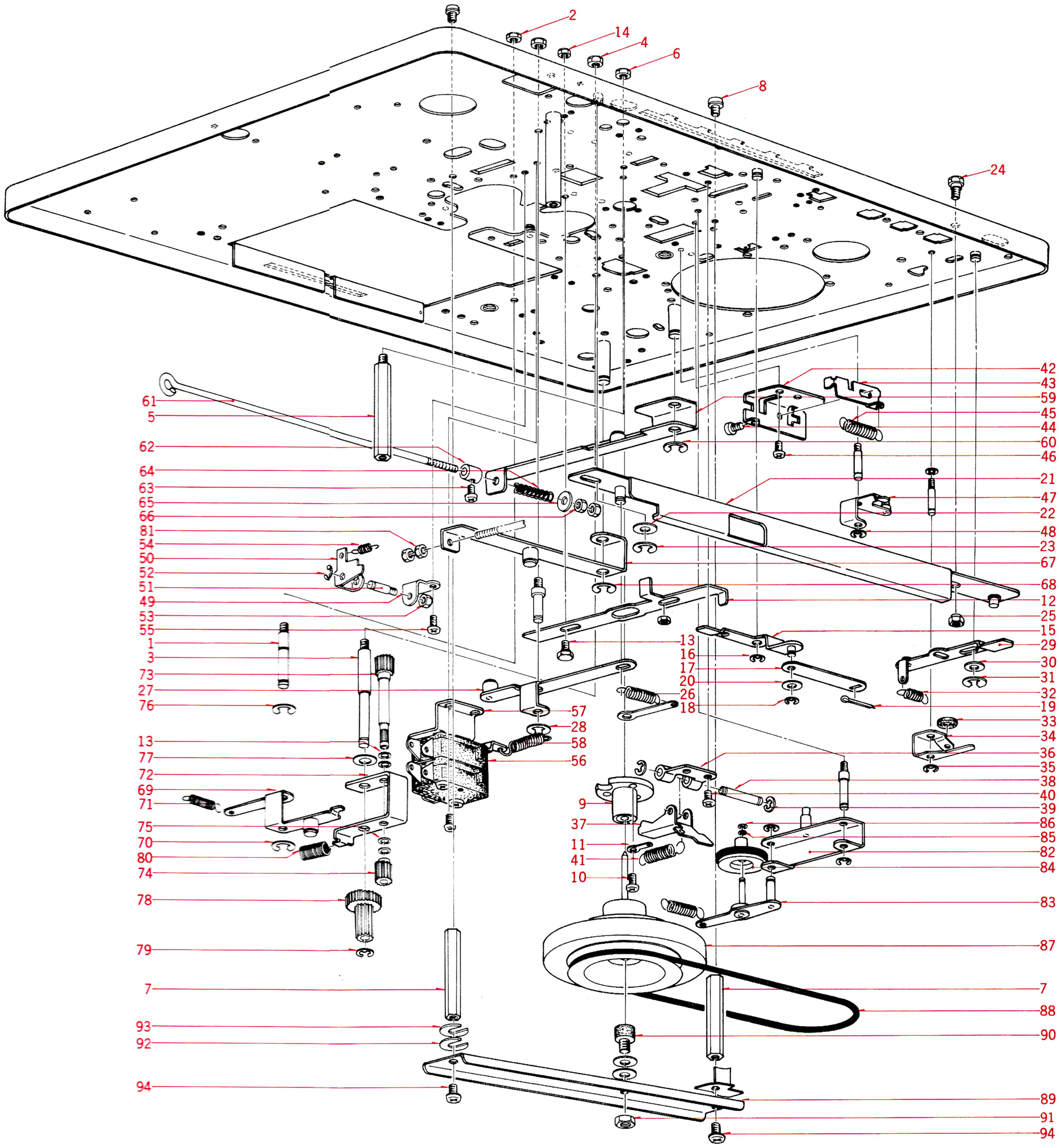

MECH. FRAME BLOCK (2)

Ref. No.	Parts No.	Description	Schematic No.	Unit Price (US)
1	I-385198	Slide Lever Shaft	CS-1012	
2	I-273756	M3 Nut		
3	I-385200	Send Inside Shaft	CS-1013	
4	I-273756	M3 Nut		
5	I-388528	P.C. Board Prop	CS-1014	
6	I-273756	M3 Nut		
7	I-385222	Flywheel Prop	CS-1016	
8	I-318486	Screw, round head 3 x 8 w/washer		
9	I-385143	Main Metal Case, w/metal	CS-1007	
10	I-201925	Screw, binding head 2.3 x 5		
11	I-273633	Earth Lug M2.3		
12	I-385435	Brake Lever B	CS-1035	
13	I-385874	Set Screw (Graduated head)	CS-2529A	
14	I-273688	M2.3 Nut		
15	I-385582	Safety Lever A, w/pin	CS-1049	
–	I-420682	Washer (Nylon) 4.2 x 9 x 0.5t		
16	I-290283	"U" Ring 2.85M	6-1-1	
17	I-386616	Safety Lever C	CS-1051	
18	I-270088	"E" Ring 1.9M	6-1-9	
19	I-314728	Cotter Pin 1.6 x 8		
20	I-302332	Washer (BSP) 3.1 x 8 x 0.5t		
21	I-386638	Auto Stop Lever B, w/shaft	CS-1053	
22	I-386380	Washer (Polyslider) 5.1 x 10.3 x 0.13t		
23	I-290283	"U" Ring 2.85M	6-1-1	
24	I-385874	Set Screw (Graduated head)	CS-2529A	
25	I-385356	Graduated Nut	CS-1028	
26	I-387178	Idler Tension Spring	CS-1106	
27	I-386640	Auto Stop Lever A, w/roller	CS-1054	
28	290283	"U" Ring 2.85M	6-1-1	
29	I-385402	Auto Stop Lever C, w/pin	CS-1032	
30	I-259514	Washer (Nylon) 3.1 x 8 x 1.0t		
31	I-290283	"U" Ring 2.85M	6-1-1	
32	I-385413	Auto Stop Spring B	CS-1033	
33	I-259514	Washer (Nylon) 3.1 x 8 x 1.0t		
34	I-385867	Auto Stop Lever D, w/pin	CS-1029	
35	I-270088	"E" Ring 1.9M	6-1-9	
36	I-386673	Lock Base	CS-1057	
37	I-386684	Lock Lever	CS-1058	
38	I-386706	Lock Lever Shaft	CS-1060	
39	I-358018	"E" Ring 2.0M	6-1-9	
40	I-356668	Screw, binding head 2.3 x 4		
41	I-385323	Eject Safety Spring	CS-1025	
42	I-386717	Mask Bracket	CS-1061	
43	I-386728	Mask	CS-1062	
44	I-356782	Screw, pan head 2.3 x 4		
45	I-385986	Safety Lever Return Spring	CS-2539	
46	I-202645	Screw, round head 3 x 3		
47	I-386730	Mask Lever C, w/pin	CS-1063	
48	I-270088	"E" Ring 1.9M	6-1-9	
49	I-387112	Rec. Safety Bracket	CS-1100	
50	I-387123	Rec. Safety Lever B	CS-1101	
51	I-385255	Rec. Safety Lever Shaft	CS-1019	
52	I-270088	"E" Ring 1.9M	6-1-9	
53	I-273688	M2.3 Nut		
54	I-387134	Rec. Safety Spring A	CS-1102	
55	I-356668	Screw, binding head 2.3 x 4		
56	I-250064	Micro Switch V-1A44	251-7	
57	I-386976	Micro Switch Table	CS-1087	
58	I-389992	Head Base Return Spring	CS-0020	
59	I-386774	Turn Over Cam Lever, w/roller	CS-1067	
60	I-290283	"U" Ring 2.85M	6-1-1	
61	I-387415	Tie Rod	CS-1132	
62	I-387426	Spring Stopper	CS-1133	
63	I-356782	Screw, pan head 2.3 x 4		
64	I-387437	Turn Over Spring	CS-1134	
65	I-402287	Washer (SPC) 3.1 x 8 x 0.5t		
66	I-273688	M2.3 Nut		
67	I-386785	Lift Cam Lever, w/roller	CS-1068	
68	I-290283	"U" Ring 2.85M	6-1-1	
69	I-386796	Slide Cam Lever, w/roller	CS-1069	
70	I-290283	"U" Ring 2.85M	6-1-1	
71	I-385986	Safety Lever Return Spring	CS-2539	
72	I-386807	Pinion Bracket	CS-1070	
73	I-386818	Pinion Shaft	CS-1071	
74	I-386820	Pinion	CS-1072	
75	I-402074	Washer (Polyslider) 4.1 x 5.1 x 0.25t		
76	I-290283	"U" Ring 2.85M	6-1-1	
77	I-396437	Washer (Polyslider) 5.1 x 10.3 x 0.25t		
78	I-386831	2 Speed Gear	CS-1073	
79	I-270101	"E" Ring 3.0M	6-1-9	
80	I-386234	Joint Spring	CS-2564	
81	I-273688	M2.3 Nut		
82	I-387145	Take-up Pulley LeverA, w/pin	CS-1103	
83	I-387167	Take-up Pulley Lever B, w/shaft	CS-1105	
84	I-387202	Idler A, w/ring	CS-1109	
85	I-364342	Washer (Polyslider) 1.7 x 3.2 x 0.25t		
86	I-391421	"E" Ring 1.0M		
87	I-387213	Flywheel Comp. (w/shaft)	CS-1110	
88	I-387246	Flywheel Belt	CS-1113	
89	I-387257	Flywheel Supporting Plate	CS-1114	
90	I-387268	Flywheel Support	CS-1115	
91	I-273960	M4 Nut		
92	I-330412	Adjusting Washer 4 x 13 x 0.13t		
93	I-330413	Adjusting Washer 4 x 13 x 0.25t		
94	I-201846	Screw, binding head 3 x 8 w/washer		
–	I-270022	Steel Ball 4mm		

When you order these parts, Please describe their Parts No. and Serial No. in detail

www.hifiengine.com

ILLUSTRATION OF AMP. BLOCK ASSEMBLY

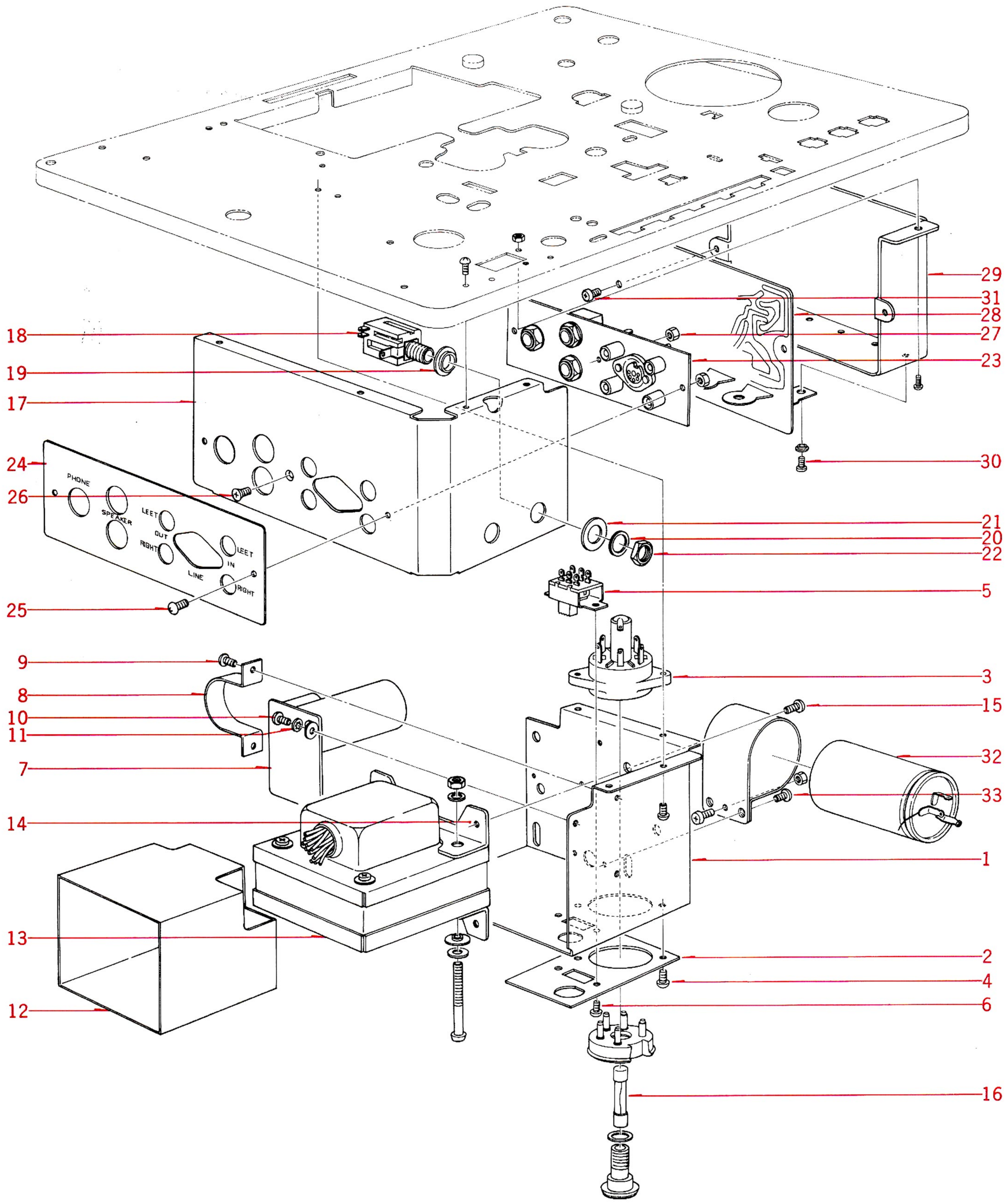

AMP. BLOCK ASSEMBLY

Ref. No.	Parts No.	Description	Schematic No.	Unit Price (US)
		POWER SOURCE BLOCK		
–	J-390216	Power Source Assy. Comp. (A)	CSA	
–	J-390238	Power Source Assy. Comp. (D)	CSD	
1	J-388282	Power Chassis	CS-5009	
2	J-388315	Power Source Name Plate A	CS-5013	
3	J-233370	Power Source Concent (Voltage Selector)	40-2-3	
4	J-372025	ISO Screw, truss head 3 x 6		
5	J-375478	Slide Switch ESD-279DU	25-3-23	
6	J-372025	ISO Screw; truss head 3 x 6		
7	J-390251	Power Source P.C. Board Comp. (A)	CS-5008	
8	J-388350	Condenser Band (A)	CS-5017	
9	J-200687	Tapping Screw #2 3 x 6 (A)		
10	J-200687	Tapping Screw #2 3 x 6		
11	J-273802	Washer M3 (Toothed Lock)		
12	J-388348	CSA Power Transformer Shield Plate	CS-5016	
13	J-389564	Power Transformer CST-1 (A)	38-4-108	
–	J-389643	Power Transformer CST-3 (D)	38-4-111	
14	J-388326	Transformer Bracket Angle (D)	CS-5014	
–	J-200687	Tapping Screw #2 3 x 6 (D)		
–	J-273881	Earth Lug M4		
15	J-200700	Tapping Screw #2 4 x 8 (A)		
16	J-338387	Fuse ST-2 1.5A	39-1-26	
–	J-277402	Fuse ST-2 1.0A	39-1-26	
–	J-383729	UL AC Cord	26-3-18	
		JACK PLATE BLOCK		
–	J-390273	Jack Plate Assy. Comp. (A)	CSA	
–	J-390284	Jack Plate Assy. Comp. (D)	CSD	
17	J-388427	CS Amp. Frame	CS-5024	
18	J-391094	Mic Jack	31-2-27	
19	J-225180	Nylon Coller, Jack	LD-520	
20	J-376481	Washer (SUP) 9.1 x 11.7 x 0.25t		
21	J-391691	Washer (Fiver) 9.1 x 18 x 0.5t		
22	J-391680	E Jack Nut	7-1-20	
23	J-388361	Jack Plate A (A)	CS-5018	
24	J-388383	Jack Name Plate A (A)	CS-5020	
–	J-388372	Jack Plate D (D)	CS-5019	
–	J-388405	Jack Name Plate D (D)	CS-5022	
–	J-255093	Lug Plate VBILI	33-4-1	
25	J-201183	Screw, truse head 3 x 8		
26	J-200373	Screw, countersunk head 3 x 5 #D = 5		
27	J-273756	M3 Nut		

Ref. No.	Parts List	Description	Schematic No.	Unit Price (US)
		MAIN AMP. P.C. BOARD BLOCK		
28	J-390205	Power Amp. P.C. Board Assy. Comp.	CS-5006	
29	J-388260	Heat Sink Plate, CS	CS-5007	
30	J-202140	Screw, binding head 3 x 8		
–	J-273756	M3 Nut		
31	J-200687	Tapping Screw #2 3 x 6		
32	J-393671	MP Capacitor 6+1 μF-150WV AC	24-9-47	
33	J-200687	Tapping Screw #2 3 x 6		

When you order these parts, Please describe their Parts No. and Serial No. in detail

www.hifiengine.com

PHOTO OF MAIN AMP. P.C. BOARD (CS-5006)

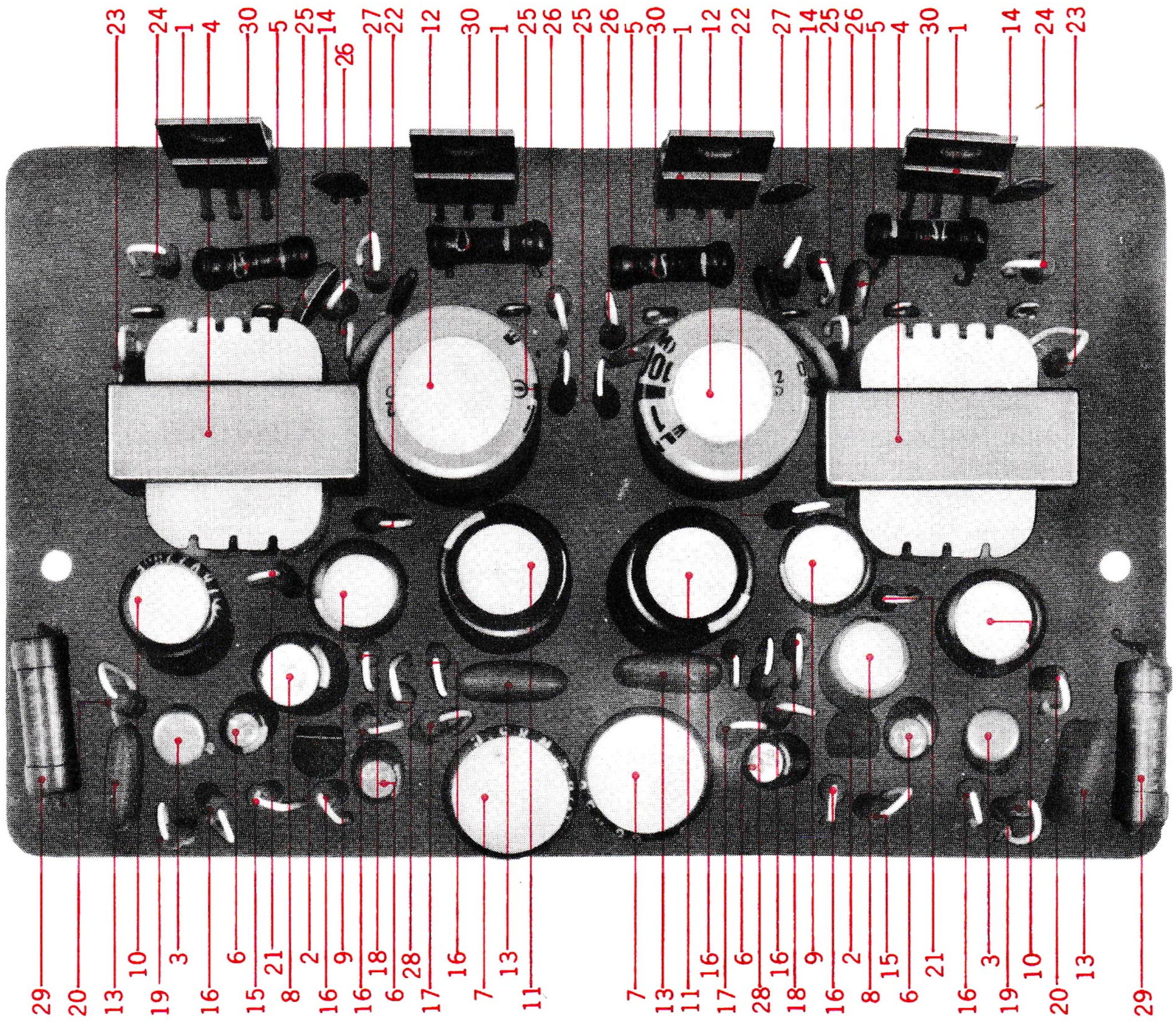

MAIN AMP. P.C. BOARD BLOCK (CS-5006)

Ref. No.	Parts No.	Description	Schematic No.	Unit Price (US)
–	K-390205	Main Amp. P.C. Board Assy. Comp.	CS-5006	
1	K-391735	Transistor G-471815 2SC1013 (D or E)	TR403, 4	
–	K-388260	Heat Sink Plate CS	CS-5007	
–	K-202140	Screw, binding head 3 x 8		
–	K-273756	M3 Nut		
–	K-200687	Tapping Screw #2 3 x 6		
2	K-379462	Transistor 2SC711 (D or E)	TR401	
3	K-391678	Transistor 2SC968 (3 or 4)	TR402	
4	K-329117	Driver Transformer N24B-6306AT	T401	
5	K-324551	Thermistor 19D46	TH401, 2	
–	K-391757	Semi-Variable Resistor V17K2D-4 1KB	VR401, 2	
		Electrolytic Capacitor, Vertical Type	C	
6	K-320051	10 μ 16WV	401, 5	
7	K-313121	220 μ 25WV	402	
8	K-220364	100 μ 6.3WV	403	
9	K-324516	220 μ 6.3WV	407	
10	K-321208	220 μ 16WV	408	
11	K-313121	220 μ 25WV	409	
12	K-220421	1000 μ 16WV	412	

Ref. No.	Parts No.	Description	Schematic No.	Unit Price (US)
13	K-290586	VFM or HI-Q 470P (K) 50WV	404, 6	
14	K-383501	Mylar 0.001μ (M) 50WV	410, 11	
		Carbon Resistor, Stopper Type	R	
15	K-212668	RD-1/4 33K K	401	
16	K-211590	RD-1/4 10K K	402, 6, 7	
17	K-211781	RD-1/4 100K K	403	
18	K-210958	RD-1/4 1K K	405	
19	K-211138	RD-1/4 470 Ω K	408	
20	K-212771	RD-1/4 39K K	409	
21	K-213052	RD-1/4 5.6K K	410	
22	K-336464	RD-1/4 56Ω K	411	
23	K-210971	RD-1/4 100Ω K	413	
24	K-383422	RD-1/4 2K K	414	
25	K-211151	RD-1/4 68Ω K	415, 18	
26	K-210971	RD-1/4 100Ω K	416, 19	
27	K-383422	RD-1/4 2K K	417	
28	K-213344	RD-1/4 680Ω K	422	
29	K-391656	Metal oxide film Resistor 2W 430Ω K	412	
30	K-251594	Wire-wound Resistor 1/2WL 1Ω K	420, 21	

When you order these parts, please describe their Parts No. and Serial No. in detail

www.hifiengine.com

PHOTO OF PRE-AMP. P.C. BOARD (CS-5028)

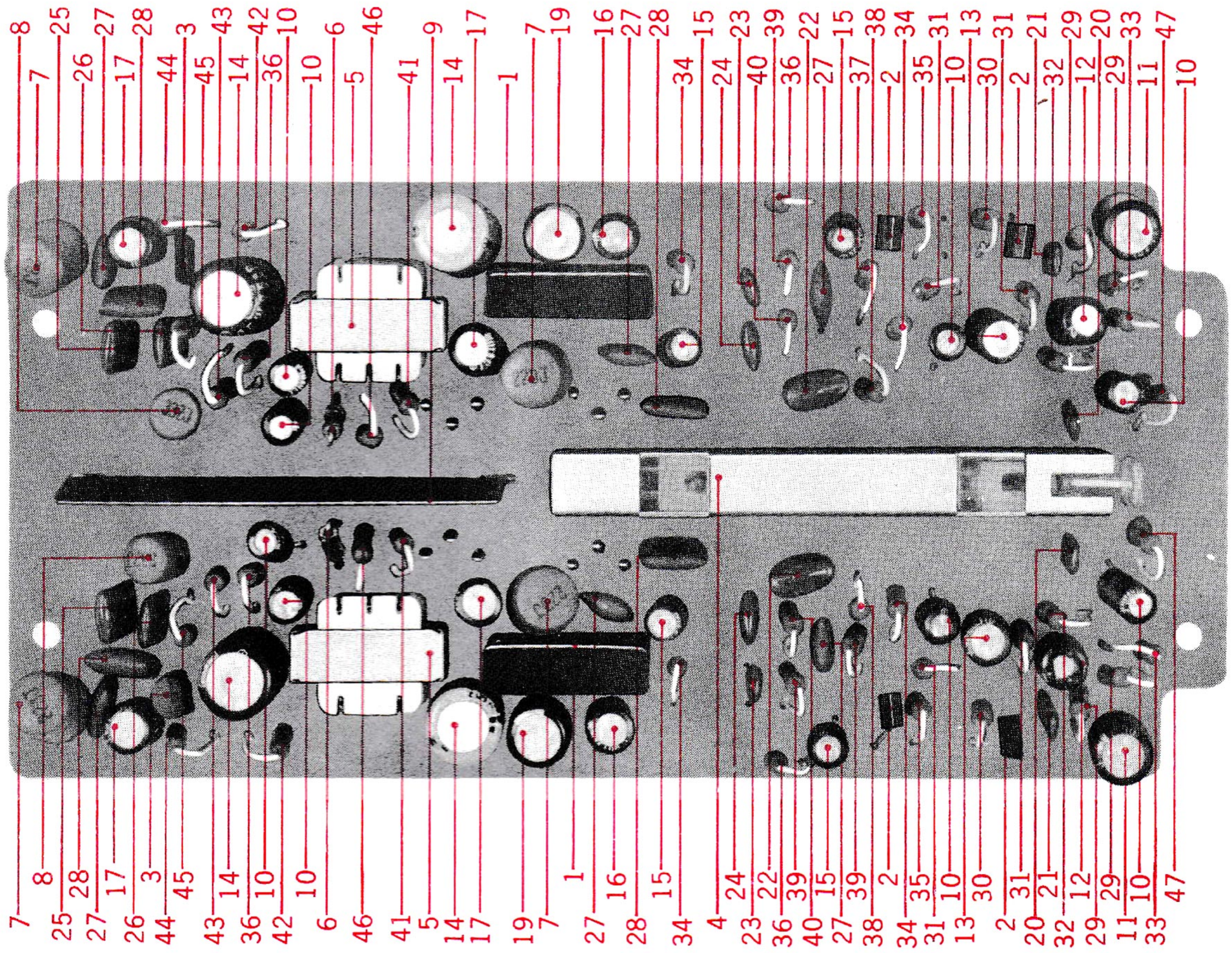

PRE-AMP. P.C. BOARD BLOCK (CS-5028)

Ref. No.	Parts No.	Description	Schematic No.	Unit Price (US)
–	L-390317	Pre-Amp. P.C. Board Assy. Comp.	CS-5028	
1	L-391770	IC. AA-072 or EHD-AA072D	IC101	
2	L-391768	Transistor 2SC458LG (C or D)	TR101, 2	
3	L-379462	Transistor 2SC711 (D or E)	TR103	
4	L-371924	Slide Switch CLB2102-B4	SW101	
5	L-247746	Headphone Transformer N19-228S	T101	
6	L-219464	Germanium Diode 1N34A	D101	
7	L-244012	Ferri Inductor FL9H 22mH (J)	L101, 3	
8	L-243988	Ferri Inductor FL7H 3.3mH (J)	L102	
9	L-388451	Print Shield Plate	CS-5027	
		Electrolytic Capacitor, Vertical Type	C	
10	L-320051	10μF 16WV	102, 7, 21, 26	
11	L-320040	47μF 16WV	104	
12	L-220590	33μF 10WV	105	
13	L-329771	47μF 6.3WV	106	
14	L-220678	47μF 25WV	113, 20	
15	L-450055	1μF 25WV	108, 14	
16	L-329771	47μF 6.3WV	116	
17	L-220994	10μF 25WV	118	
18	L-220364	100μF 6.3WV	119	
19	L-220994	10μF 25WV	122	
		Mylar Capacitor, Vertical Type	C	
20	L-350875	0.001μ (J) 50WV	101	
21	L-250604	0.001μ (K) 50WV	103	
22	L-389496	0.068μ (J) 50WV	110	
23	L-389474	0.0015μ (J) 50WV	111	
24	L-389485	0.018μ (J) 50WV	112	
25	L-379157	0.033μ (J) 50WV	123	
26	L-290975	0.015μ (J) 50WV	124	
27	L-290520	VFM or HI-Q 100P (J) 50WV	109, 17, 25	
28	L-290564	VFM or HI-Q 220P (K) 50WV	115, 27	
		Carbon Resistor, Stopper Type	R	
29	L-211757	RD-1/4 100K J	101, 2	
30	L-362485	RD-1/4 300K J	103	
31	L-346601	RD-1/4 47K J	104, 5	
32	L-336442	RD-1/4 10K J	106	
33	L-212681	RD-1/4 330Ω J	107	
34	L-212916	RD-1/4 4.7K K	108, 15	
35	L-212310	RD-1/4 22K K	109	
36	L-211590	RD-1/4 10K K	110, 19	
37	L-212264	RD-1/4 22K J	111	
38	L-211757	RD-1/4 100K J	112	
39	L-306360	RD-1/4 6.8K J	113	
40	L-391961	RD-1/4 91K J	114	
41	L-211882	RD-1/4 12K K	116	
42	L-212354	RD-1/4 220Ω K	117	
43	L-211781	RD-1/4 100K K	118	
44	L-211983	RD-1/4 15K K	120	
45	L-210958	RD-1/4 1K K	121	
46	L-343078	RD-1/4 2.7K J	122	
47	L-212916	RD-1/4 4.7K K	123	

When you order these parts, Please describe their Parts No. and Serial No. in detail

www.hifiengine.com

PHOTO OF OSC. P.C. BOARD

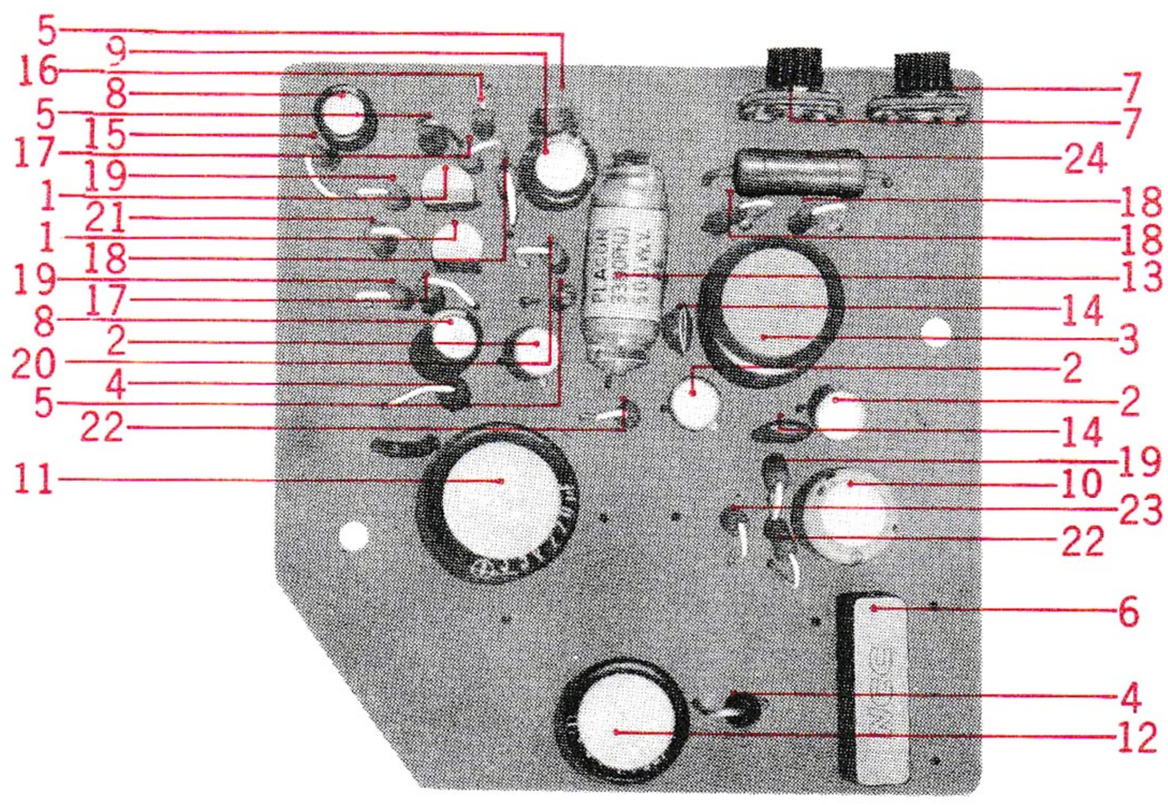

PHOTO OF OSC. P.C. BOARD (DECK)

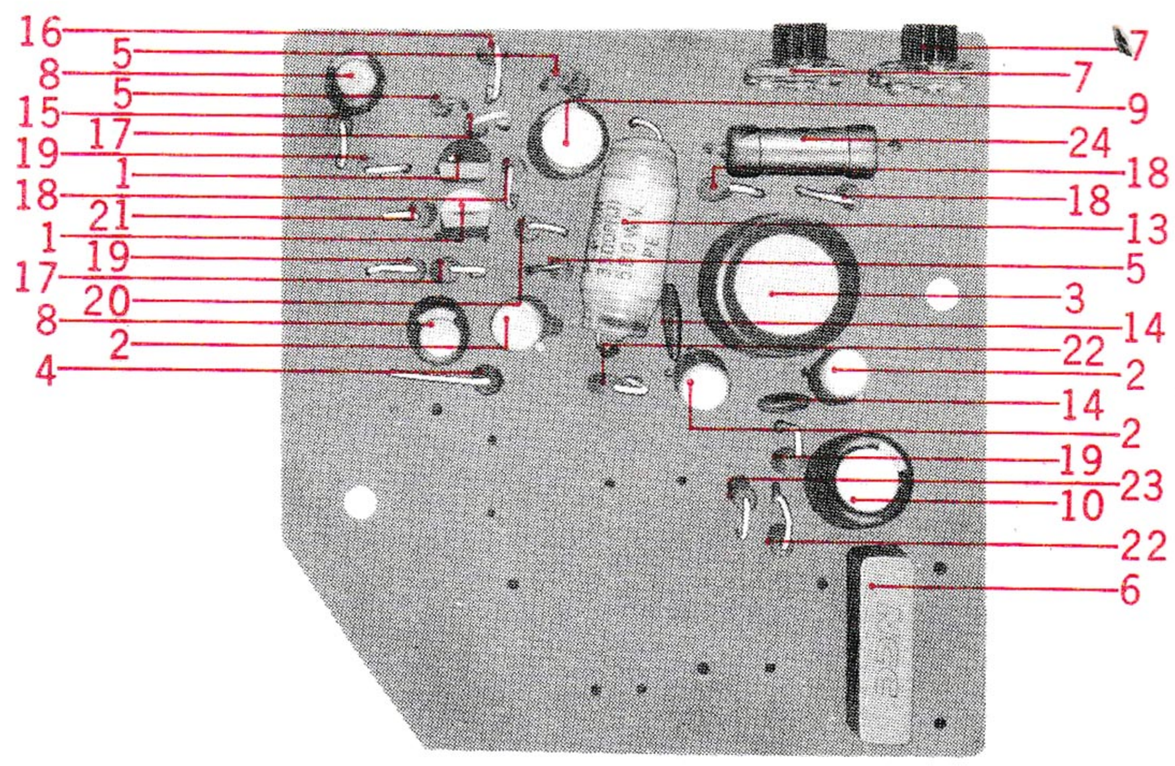

OSCILLATOR P.C. BOARD BLOCK

Ref. No.	Parts No.	Description	Schematic No.	Unit Price (US)
–	M-390183	Oscillator P.C. Board Assy. Comp.	CS-5003	
–	M-390194	Oscillator P.C. Board Assy. Comp. (Deck)	CS-5003	
1	M-379462	Transistor 2SC711 (D or E)	TR201, 2	
2	M-391138	Transistor 2SC968 (3 or 4)	TR203, 4, 5	
3	M-383365	Oscillator Coil OT-204	T201	
4	M-224526	Silicon Diode 10D1	D204, 5	
5	M-219464	Germanium Diode 1N34A	D201, 2, 3	
6	M-376413	Spark Quencher 0.033μ + 120Ω 500WV	CR202	
7	M-407643	Semi-Variable Resistor V10K5 500KB	VR201, 2	
		Electrolytic Capacitor, Vertical Type	C	
8	M-220994	10μ 25WV	201, 3	
9	M-320040	47μ 16WV	202	
10	M-220678	470μ 10WV	207	
11	M-372148	220μ 35WV	208	
12	M-220768	470μ 10WV	209	
13	M-460091	Plastic 3300P (J) 500WV	204	
14	M-250841	Mylar 0.01μ (J) 50WV	205, 6	
		Carbon Resistor, Stopper Type	R	
15	M-212916	RD-1/4 4.7K K	201	
16	M-212400	RD-1/4 220K K	202	
17	M-211590	RD-1/4 10K K	203, 8	
18	M-212940	RD-1/4 47K K	204, 10, 11	
19	M-212916	RD-1/4 4.7K K	205, 9, 12	
20	M-210971	RD-1/4 100Ω K	206	
21	M-212310	RD-1/4 22K K	207	
22	M-315944	RD-1/4 3.3Ω J	213, 14	
23	M-211138	RD-1/4 470Ω K	215	
24	M-393693	Metal Oxide Film Resistor 2W 420Ω K	216(D)	
25	M-391601	Metal Oxide Film Resistor 1W 220Ω K	216(A)	

When you order these parts, Please describe their Parts No. and Serial No. in detail

www.hifiengine.com

PHOTO OF POWER SOURCE P.C. BOARD (CS-5008)

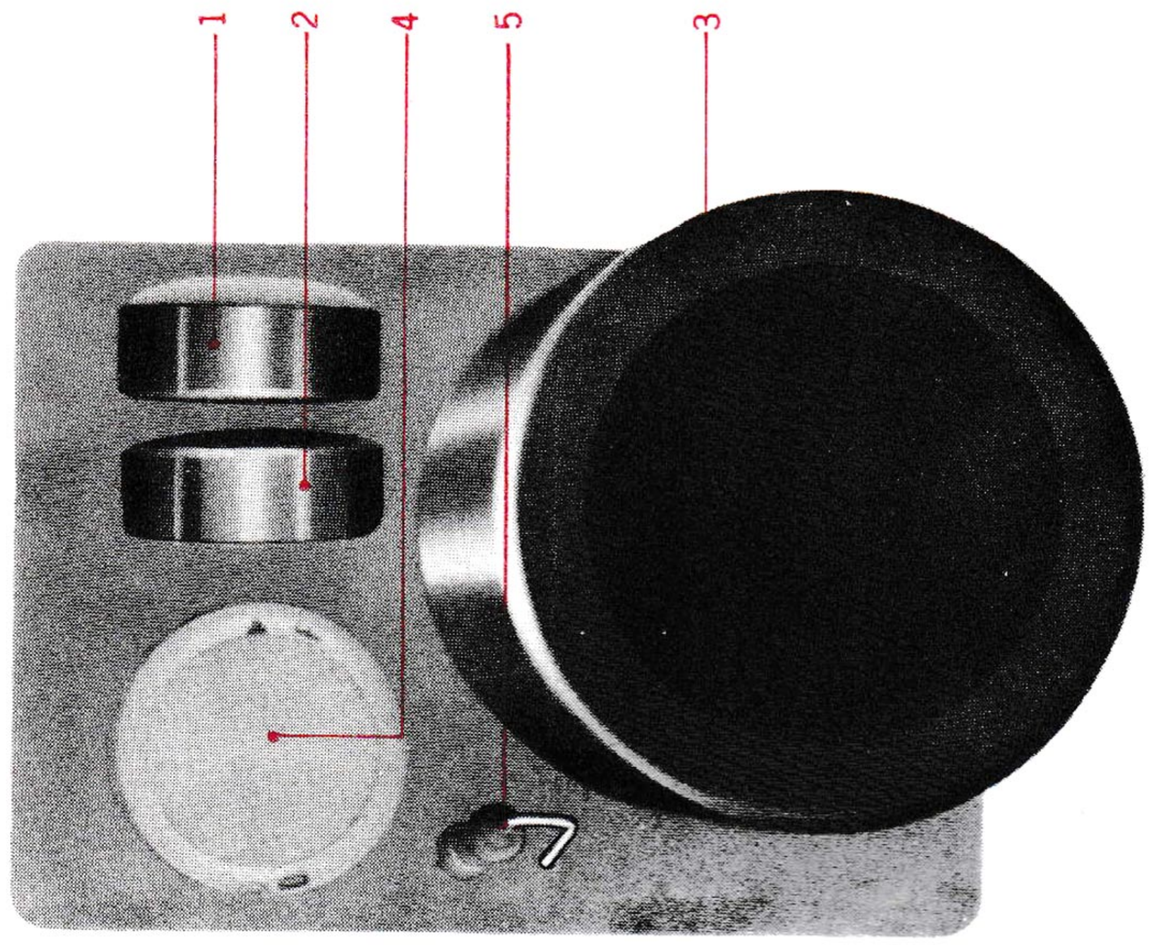

PHOTO OF POWER SOURCE P.C. BOARD (CS-5004)

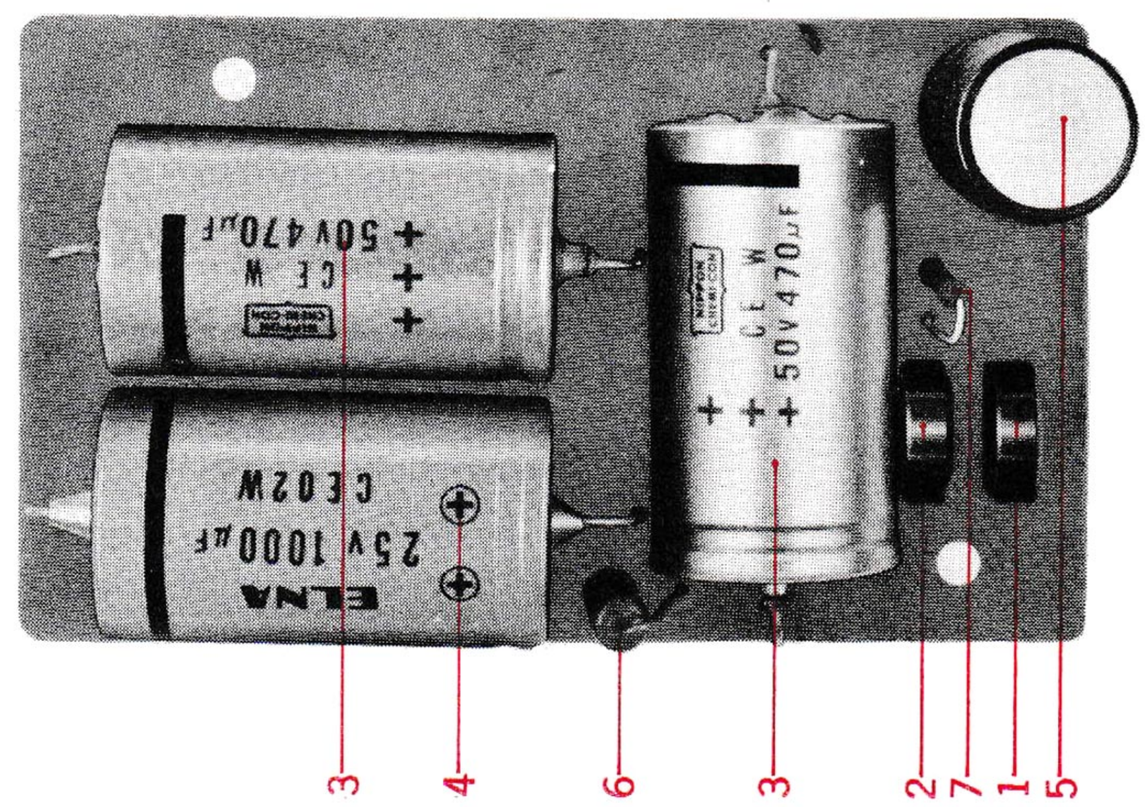

POWER SOURCE P.C. BOARD (CS-5008)

Ref. No.	Parts No.	Description	Schematic No.	Unit Price (US)
–	N-390251	Power Source P.C. Board A Assy. Comp.	CS-5008	
1	N-329128	Silicon Diode 10DC-1 (Red)	D302	
2	N-329130	Silicon Diode 10DC-1 (Black)	D301	
3	N-389553	Elect. Lug Type 2200μ 35WV	C301	
4	N-313121	Elect. Vert. Type 220μ 25WV	C302	
5	N-213581	Carbon Resistor RD-1/4 1K K	R301	
–	N-273778	M3 Earth Lug		

POWER SOURCE P.C. BOARD (CS-5004)

Ref. No.	Parts No.	Description	Schematic No.	Unit Price (US)
–	O-390262	Power Source P.C. Board D Assy. Comp.	CS-5004	
1	O-329128	Silicon Diode 10DC-1 (Red)	D302	
2	O-329130	Silicon Diode 10DC-1 (Black)	D301	
3	O-460067	Elect. Tubular Type 470μ 50WV	C301, 2	
4	O-345791	Elect. Tubular Type 1000μ 25WV	C303	
5	O-331817	Elect. Vert. Type 470μ 25WV	C304	
6	O-391623	Metal Oxide Film Resistor 1W 1K K	R302	
7	O-211072	Carbon Resistor RD-1/4 3.3K K	R301	
–	O-388225	Prop	CS-5002	
–	O-201835	Screw, binding head 3 x 5		
–	O-388214	P.C. Board Mounting Plate	CS-5001	
–	O-202083	Screw, binding head 3 x 5 w/washer		

When you order these parts, Please describe their Parts No. and Serial No. in detail

www.hifiengine.com

PHOTO OF ASSEMBLY BLOCK

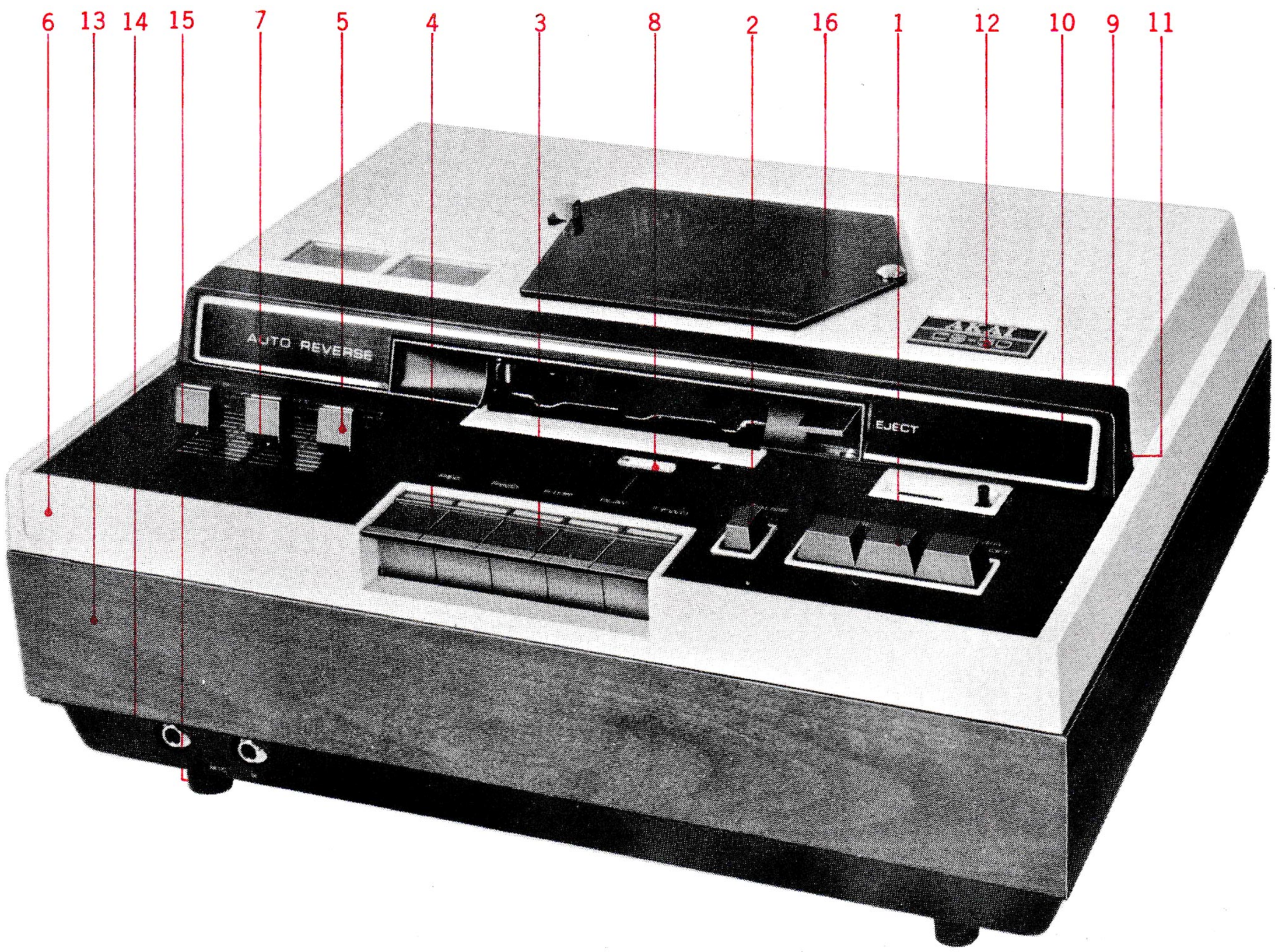

ASSEMBLY BLOCK

Ref. No.	Parts No.	Description	Schematic No.	Unit Price (US)
1	P-387450	Function Knob	CS-1140	
2	P-387461	Pouse Knob	CS-1141	
3	P-386256	Keyboard Button (White Line)	CS-3003	
4	P-386256	Keyboard Button (Red Line)	CS-3003	
5	P-386537	Volume Knob	CS-6021	
–	P-386504	Knob Stopper	CS-6020	
6	P-405628	CS Case	CS-6008	
7	P-386460	Front Panel A	CS-6015	
–	P-386471	Front Panel D (Deck)	CS-6016	
8	P-386482	Indicator	CS-6017	
9	P-386515	Front Grille	CS-6019	
10	P-386526	Name Plate, Front Grille	CS-6019B	
11	P-391544	Screw, countersunk head 3 x 6 (Black)		
12	P-386414	Name Plate (A)	CS-6010	
–	P-386425	Name Plate D (Deck)	CS-6011	
13	P-386381	Frame (Wood)	CS-6006	
14	P-386368	Lower Cover A	CS-6003, 4	
–	P-391151	Lower Cover D (Deck)	CS-6003, 5	
15	P-371654	ED Rubber Foot	ED-620	
–	P-201666	Screw, pan head 4 x 12		
–	P-277424	Fuse ST-4 0.8A	39-1-28	
–	P-371698	Fuse ST-4 0.5A	39-1-28	
16	P-405617	Window Cover	CS-6009A	

When you order these parts, Please describe their Parts No. and Serial No. in detail

www.hifiengine.com

AKAI

AKAI ELECTRIC CO., LTD. 12-14, 2-chome, Higashi-Kojiya, Ohta-ku, Tokyo, Japan Price $4.00

Printed in Japan

www.hifiengine.com