AKAI SERVICE MANUAL

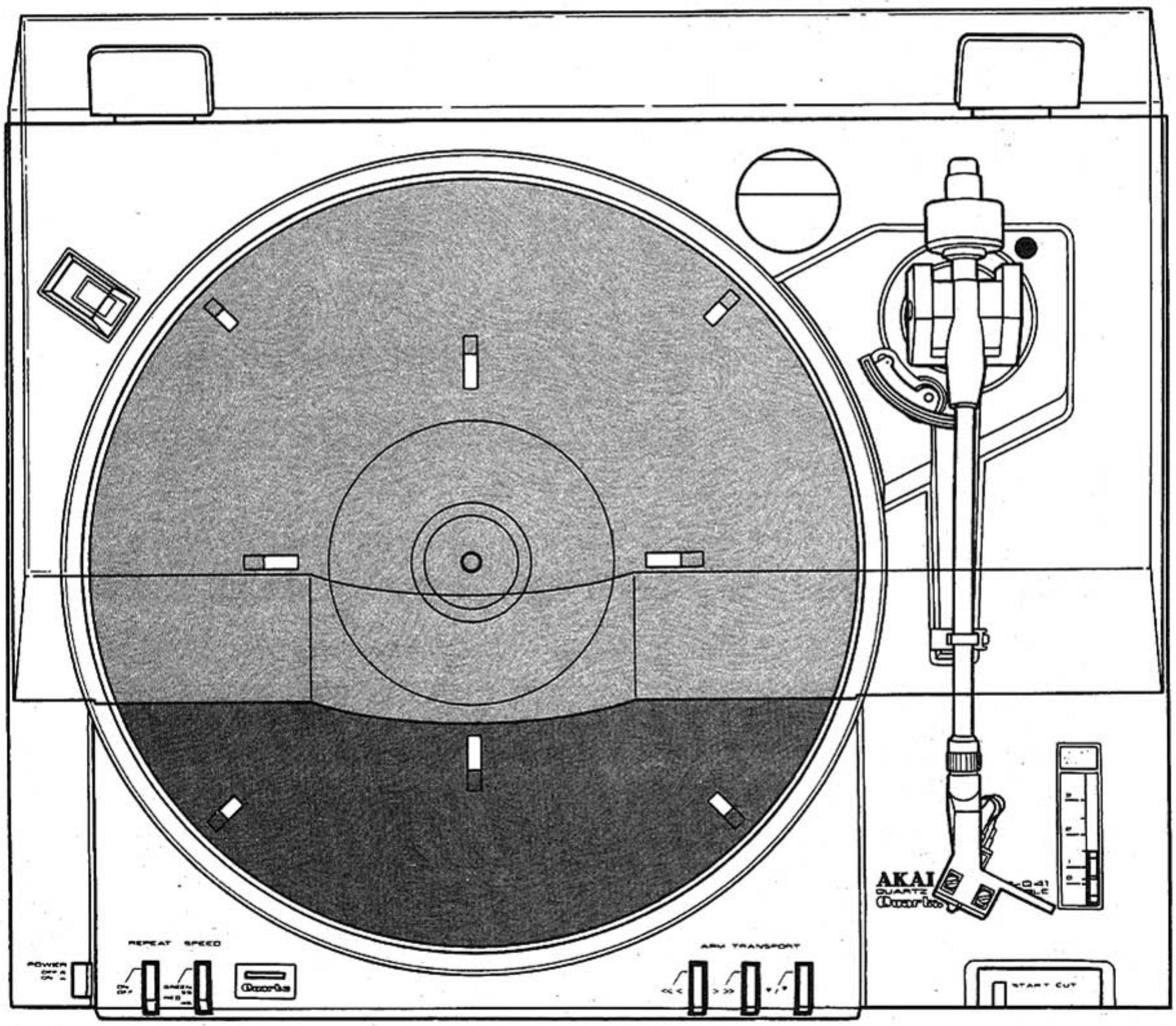

QUARTZ FULL AUTO TURNTABLE

MODEL AP-Q41/C

QUARTZ FULL AUTO TURNTABLE

MODEL AP-Q41/C

THIS MANUAL IS APPLICABLE TO BOTH SILVER
AND PEARL SHADOW PANEL MODELS

SECTION 1 SERVICE MANUAL 3
SECTION 2 PARTS LIST 31
SECTION 3 SCHEMATIC DIAGRAM 38

SAFETY CHECK AFTER SERVICING

Confirm the specified insulation resistance between power cord plug prongs and externally exposed parts of the set is greater than 10 Mohms, but for equipment with external antenna terminals (tuner, receiver, etc.) and is intended for [C] or [A], specified insulation resistance should be more than 2.2 Mohms (ground terminals, microphone jacks, headphone jacks. line-in-out jacks etc.)

PRECAUTIONS DURING SERVICING

1. Parts identified by the ⚠ symbol parts are critical for safety.
   Replace only with parts number specified.
2. In addition to safety, other parts and assemblies are specified for conformance with such regulations as those applying to spurious radiation. These must also be replaced only with specified replacements.
   Examples: RF converters, tuner units, antenna selector switches, RF cables, noise blocking capacitors, noise blocking filters, etc.
3. Use specified internal wiring. Note especially:
   1) Wires covered with PVC tubing
   2) Double insulated wires
   3) High voltage leads
4. Use specified insulating materials for hazardous live parts. Note especially:
   1) Insulation Tape
   2) PVC tubing
   3) Spacers (Insulating Barriers)
   4) Insulation sheets for transistors
5. When replacing AC primary side components (transformers, power cords, noise blocking capacitors, etc.), wrap ends of wires securely about the terminals before soldering.

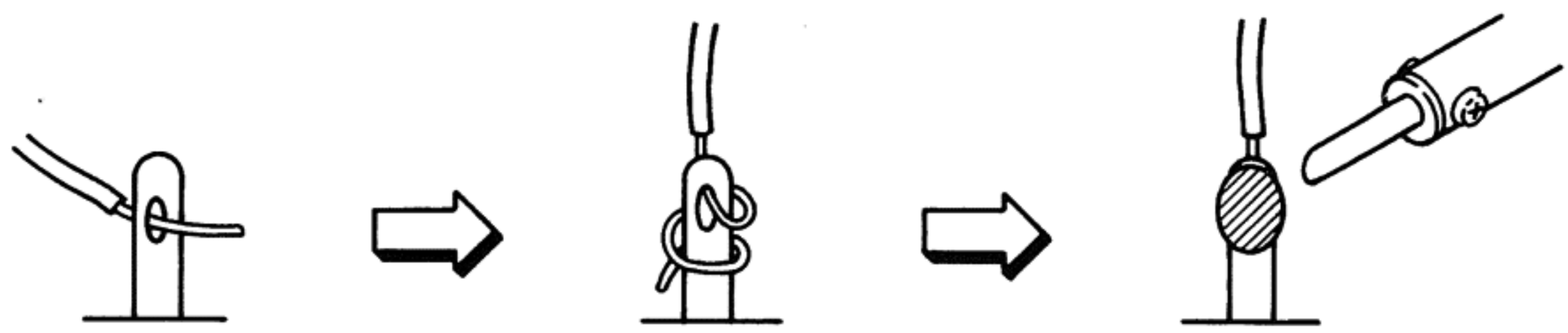

6. Observe that wires do not contact heat producing parts (heatsinks, oxide metal film resistors, fusible resistors, etc.).
7. Check that replaced wires do not contact sharp edged or pointed parts.
8. Also check areas surrounding repaired locations.
9. Use care that foreign objects (screws, solder droplets, etc.) do not remain inside the set.

SECTION 1

SERVICE MANUAL

TABLE OF CONTENTS

I. SPECIFICATIONS 4
II. DISMANTLING OF UNIT 5
III. CONTROLS 6
IV. PRINCIPAL PARTS LOCATION 7
V. VOLTAGE AND CYCLE CONVERSION 8
VI. CIRCUIT DESCRIPTION 9
1. MICROCOMPUTER TERMINAL FUNCTIONS 9
2. TC4016BP OPERATION 10
3. CIRCUIT DESCRIPTION 11
VII. ORDINARY ADJUSTMENT 19
1. STYLUS PRESSURE ADJUSTMENT 19
2. OVERHANG 20
3. TONE ARM LIFTER HEIGHT ADJUSTMENT 21
4. LEAD-IN POSITION ADJUSTMENT 21
VIII. ELECTRICAL ADJUSTMENT 22
IX. CLASSIFICATION OF VARIOUS P.C BOARDS 24
1. P.C BOARD TITLES AND IDENTIFICATION NUMBERS 24
2. COMPOSITION OF VARIOUS P.C BOARDS 25

For basic adjustments, measuring methods, and operating principles, refer to GENERAL TECHNICAL MANUAL.

I. SPECIFICATIONS

TURNTABLE	310 mm aluminum alloy die cast
DRIVE SYSTEM & MECHANISM	Quartz Locked Direct Drive, Fully Automatic
MOTOR	DC Servo Motor
SPEED	33-1/3 rpm, 45 rpm
SPEED DEVIATION	±0.002%
WOW & FLUTTER	0.025% (WRMS)
RUMBLE	78 dB (DIN B), 48 dB (DIN A)
TONE ARM	Static-balanced type with electronic inside force canceller
EFFECTIVE ARM LENGTH	220 mm
STYLUS PRESSURE ADJUSTMENT RANGE	0 to 2.5 grams
APPLICABLE CARTRIDGE WEIGHT	3 to 8 grams
ARM LIFTER	Oil damped
OVERHANG	17.5 mm
SHELL WEIGHT	3.6 grams
CARTRIDGE	VMS type (Ortofon: SMB-12) (Model AP-Q41 does not include cartridge.)
OPTIMAL STYLUS PRESSURE	1.5 grams
OUTPUT VOLTAGE	4.3 mV (DIN)
CHANNEL SEPARATION	25 dB
POWER REQUIREMENTS	110V, 50/60 Hz for Japan 120V, 60 Hz for USA and Canada 220V, 50 Hz for Europe except UK 240V, 50 Hz for UK and Australia 110–120V/220–240V, 50/60 Hz switchable for other countries
POWER CONSUMPTION	14W (J), 12W (Others)
DIMENSIONS	440(W) x 97(H) x 342(D) mm (17.3 x 3.8 x 13.5 inches)
WEIGHT	6.1 kg (13.4 lbs)

*** For improvement purposes, specifications and design are subject to change without notice.**

II. DISMANTLING OF UNIT

In case of trouble, etc. necessitating dismantling, please dismantle in the order shown in the photographs. Reassemble in reverse order.

3

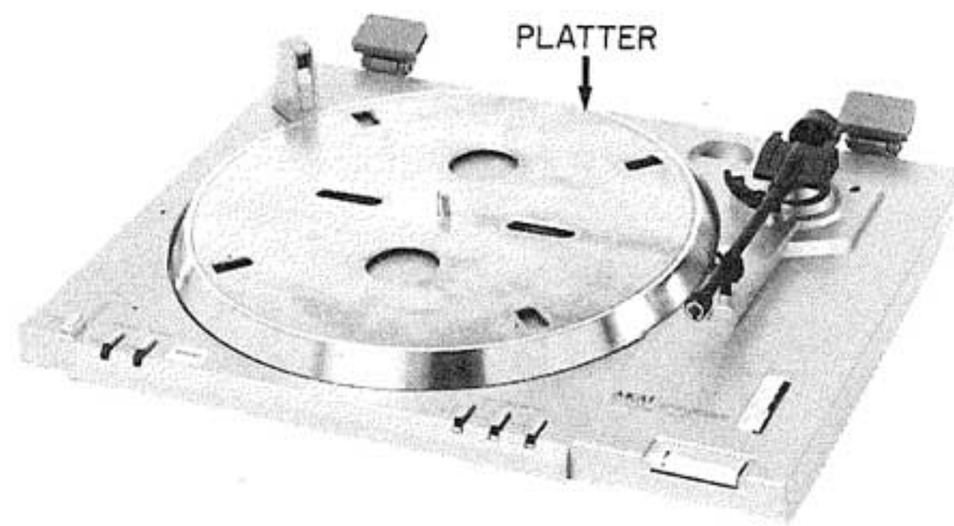

1

4

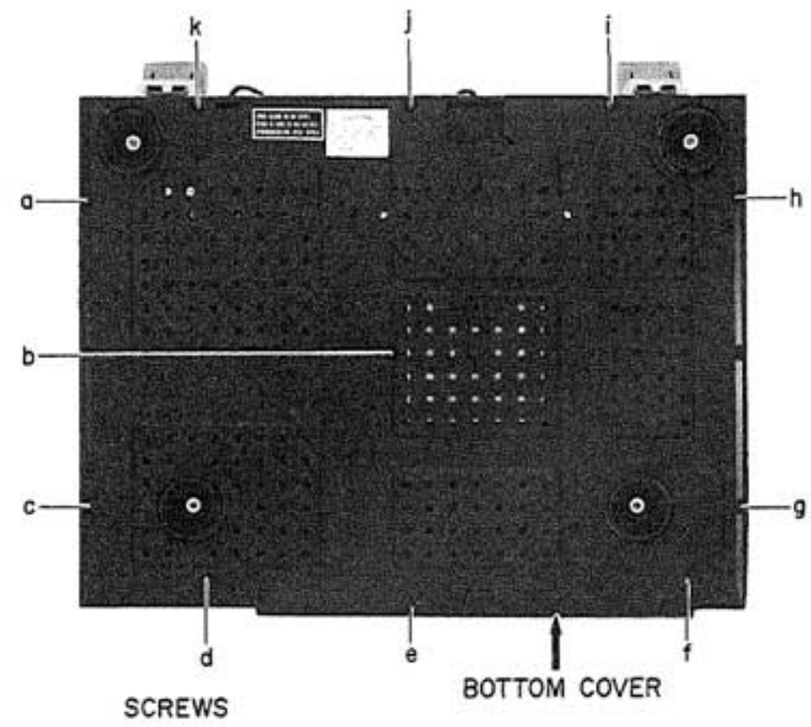

2

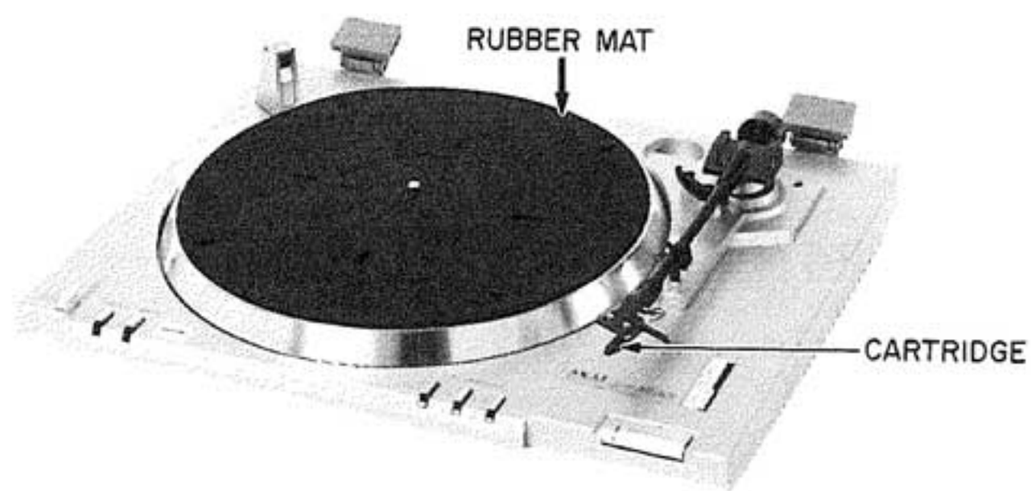

5

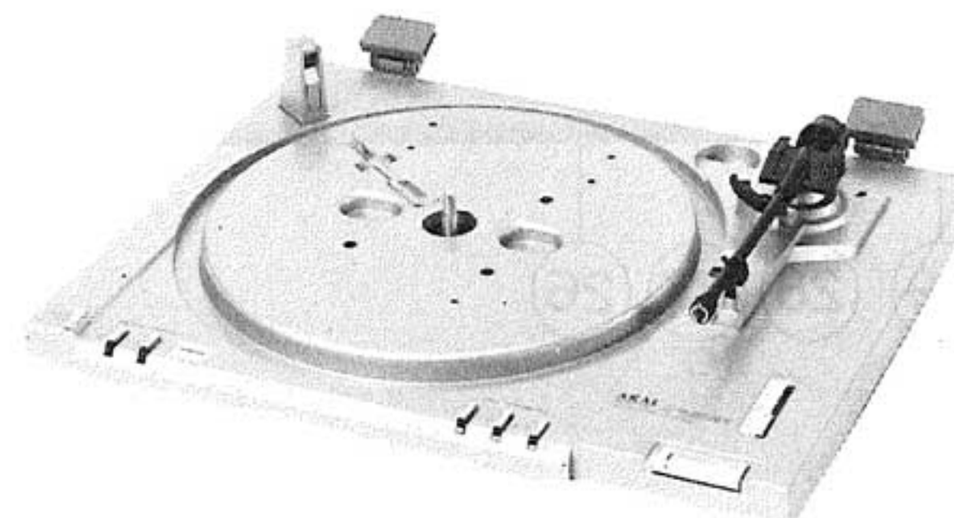

III. CONTROLS

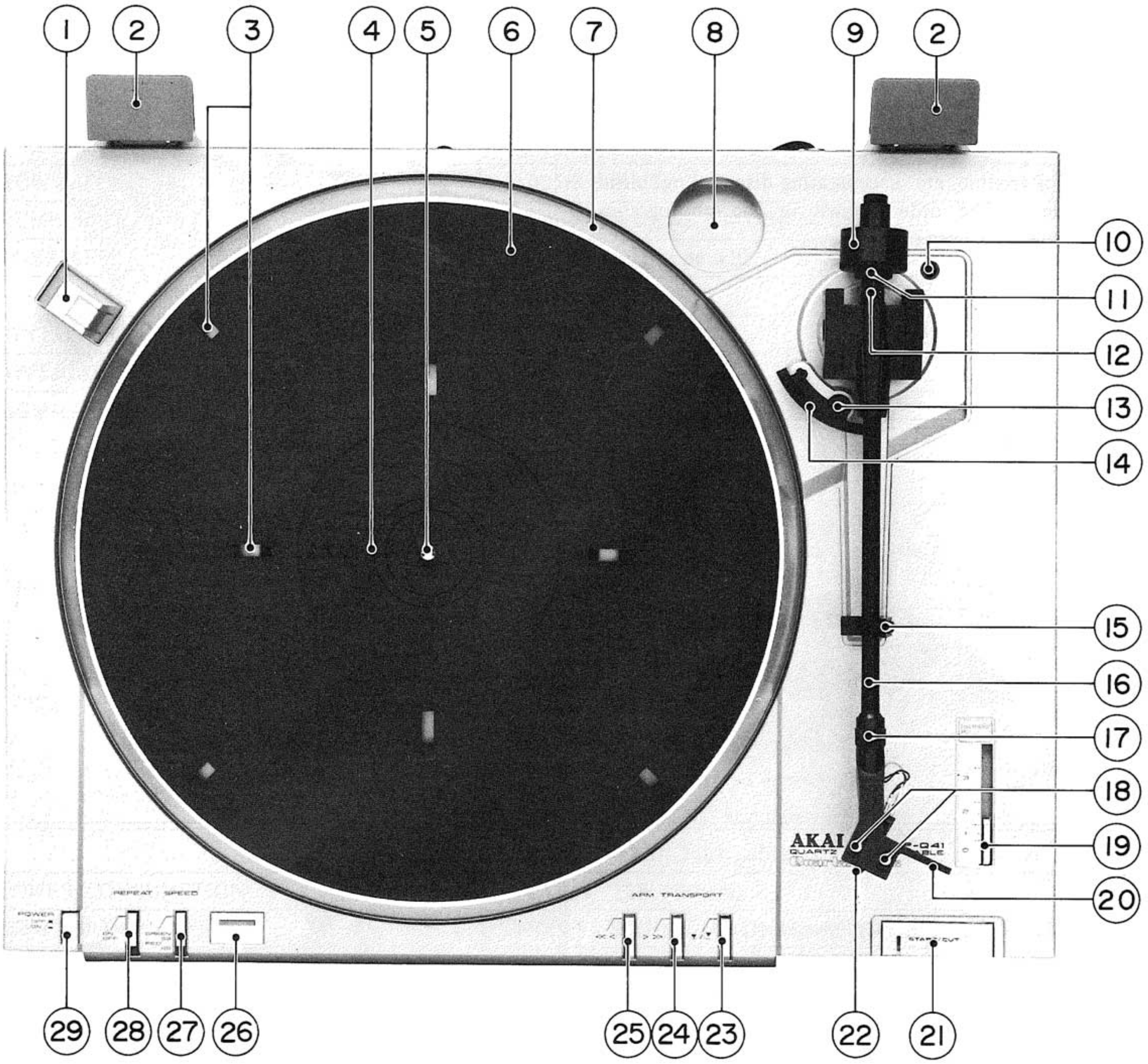

Fig. 1 Controls

1. SENSOR ILLUMINATOR
2. HINGES
3. RECORD SENSING HOLES
4. GROOVE FOR OVERHANG ADJUSTMENT
5. SPINDLE
6. RUBBER MAT
7. PLATTER
8. 45 RPM ADAPTER HOLDER
9. MAIN WEIGHT
10. AUTO LEAD-IN ADJUSTMENT SCREW
11. STYLUS PRESSURE SCALE RING
12. MARKER
13. TONE ARM LIFTER HEIGHT ADJUSTMENT SCREW
14. TONE ARM LIFTER
15. TONE ARM REST AND CLAMP
16. TONE ARM
17. LOCKING RING
18. CARTRIDGE RE-SETTING SCREW
19. ANTI-SKATING ADJUSTER
20. HEAD SHELL
21. START/CUT BUTTON WITH INDICATOR
22. CARTRIDGE (AP-Q41C ONLY)
23. CUEING (▼/▼) BUTTON
24. REVERSE (>≫) BUTTON
25. FORWARD (≪<) BUTTON
26. QUARTZ LOCK INDICATOR
27. SPEED SELECTOR
28. REPEAT SWITCH
29. POWER SWITCH

IV. PRINCIPAL PARTS LOCATION

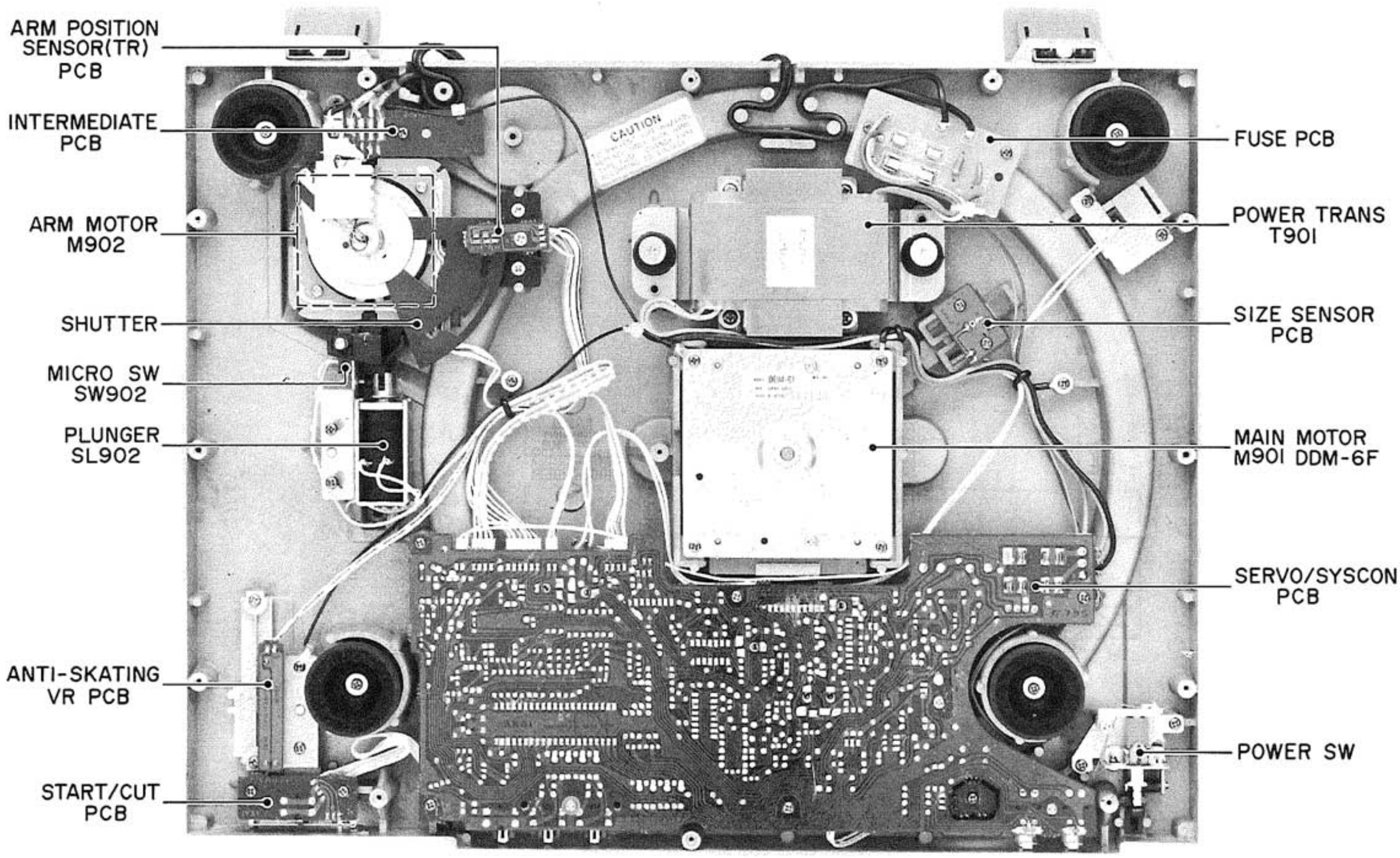

Fig. 2 Buttom View

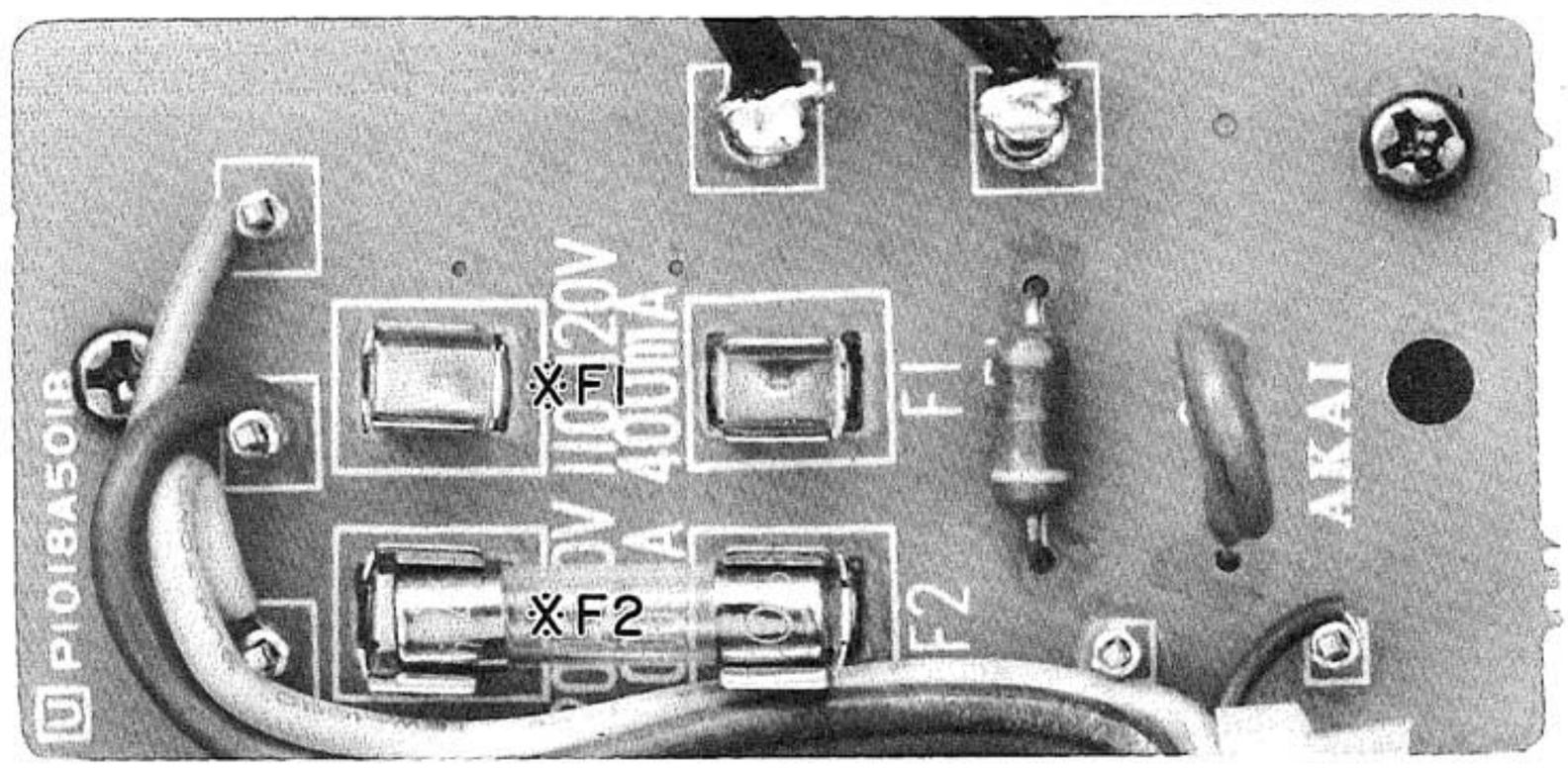

※	F1	F2
110 to 120V ARIA	400mA	OPEN
220 to 240V ARIA	OPEN	400mA

Fig. 3 Voltage Conversion (U Model only)

1. VOLTAGE CONVERSION

Models for Canada, USA, Europe, UK, Australia and Japan are not equipped with this facility.
Each unit is preset at the factory depending on its destination, but some units can be converted to 110–120V or to 220–240V as required.
If voltage change is necessary, this can be accomplished as follows:

1. Disconnect the power cord.
2. Remove the bottom cover.
3. Remove the existing Line Voltage Fuse and insert the required Line Voltage Fuse in the proper fuse holder according to the printed instructions.

2. CYCLE CONVERSION

With DC servo motor, cycle conversion is not necessary.

VI. CIRCUIT DESCRIPTION

1. MICROCOMPUTER TERMINAL FUNCTIONS

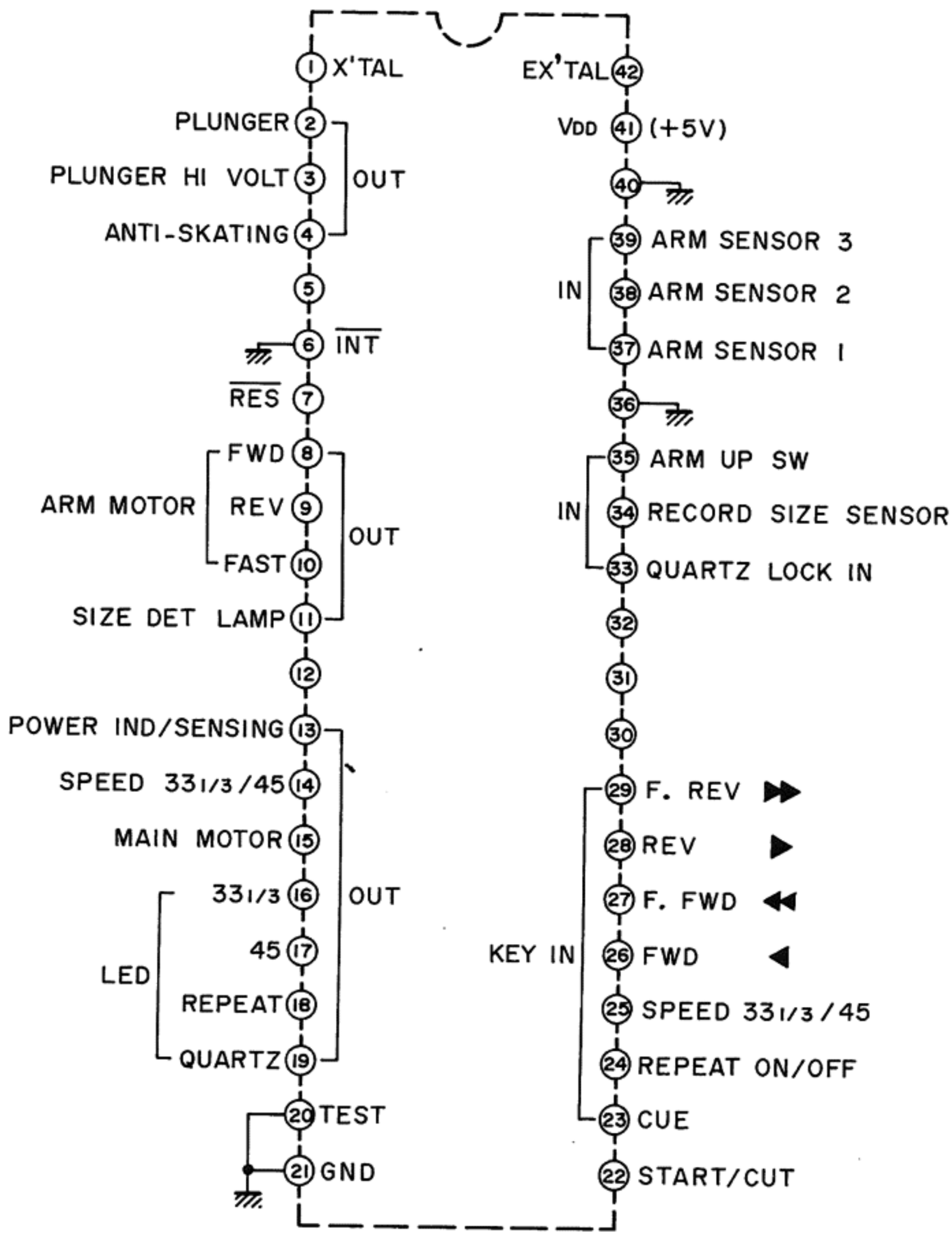

Fig. 4 LM6405A-035

No.	Terminal Description	Function	No.	Terminal Description	Function
1	X'TAL		42	E X'TAL	
2	PLUNGER	L: Plunger ON	41	VDD	+5V
3	PLUNGER HI. VOLT.	L: ON	40		GND
4	ANTI-SKATING	L: ON	39	ARM SENSOR 3	POSITIVE LOGIC *
5	OPEN		38	ARM SENSOR 2	POSITIVE LOGIC *
6	$\overline{\text{INT}}$	GND	37	ARM SENSOR 1	POSITIVE LOGIC *
7	$\overline{\text{RES}}$		36		GND
8	FWD	L: ON	35	ARM UP SW	ARM UP: H
9	REV	L: ON	34	RECORD SIDE SENSOR	POSITIVE LOGIC *
10	FAST	L: SLOW	33	QUARTZ LOCK IN	ON: L
11	SIZE DET. LAMP	L: ON	32	OPEN	
12	OPEN		31	OPEN	
13	POWER IND/SENSING	L: GRN LED H: RED LED	30	OPEN	
14	SPEED	L: 33 1/3 rpm H: 45 rpm	29	F. REV	ON: L
15	MAIN MOTOR	L: ON	28	REV	ON: L
16	33 1/3	L: LED ON	27	F. FWD	ON: L
17	45	L: LED ON	26	FWD	ON: L
18	REPEAT	L: LED ON	25	SPEED 33 1/3, 45	ON: L
19	QUARTZ	L: LED ON	24	REPEAT ON/OFF	ON: L
20	TEST	GND	23	CUE	ON: L
21	GND	GND	22	START/CUT	ON: L

Fig. 5 Terminal Functions

* **NOTE:** Positive logic – When the light is sensed by the sensor, the level becomes "H" level.

2. TC4016BP OPERATION

TC4-16BP is a Quad Bilateral Switch which is designed so that when the control input is set to "H" level, the operation between the switch in and out becomes low impedance and when it is set to "L" level, the low impedance changes to high impedance.

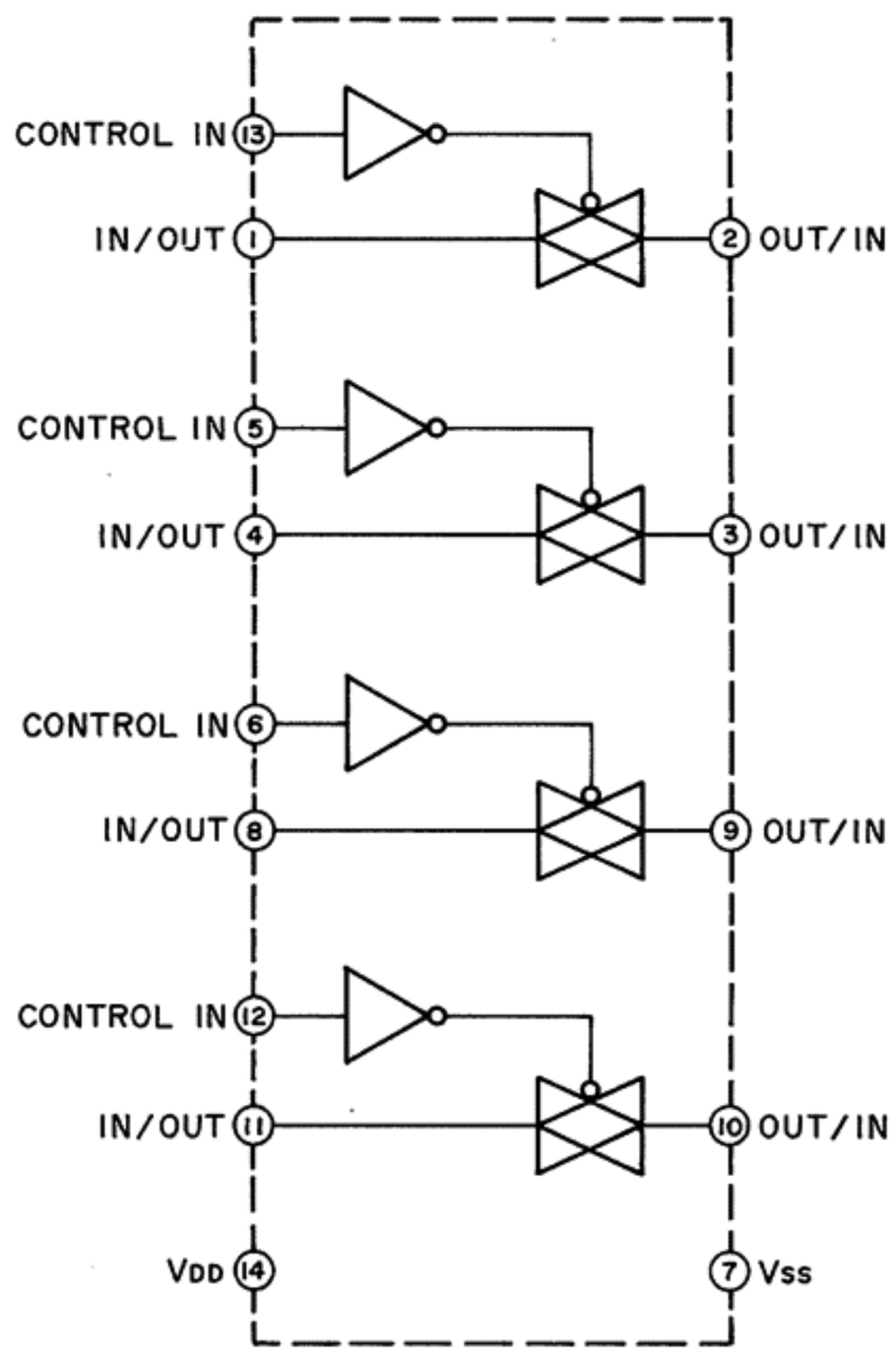

Fig. 6 TC4016BP

3. CIRCUIT DESCRIPTION

3-1 OUTLINE

AP-Q41/C is a full automatic player with a microcomputer. The microcomputer which automatically detects the record size and number of revolution actuates the auto lead in and the auto lead out.
Fig. 7 shows the auto play of 30 cm record while Fig. 8 shows the timing of each part. Fig. 9 shows the block diagram. The following describes the circuit operation according to the timing chart shown in Fig. 8.

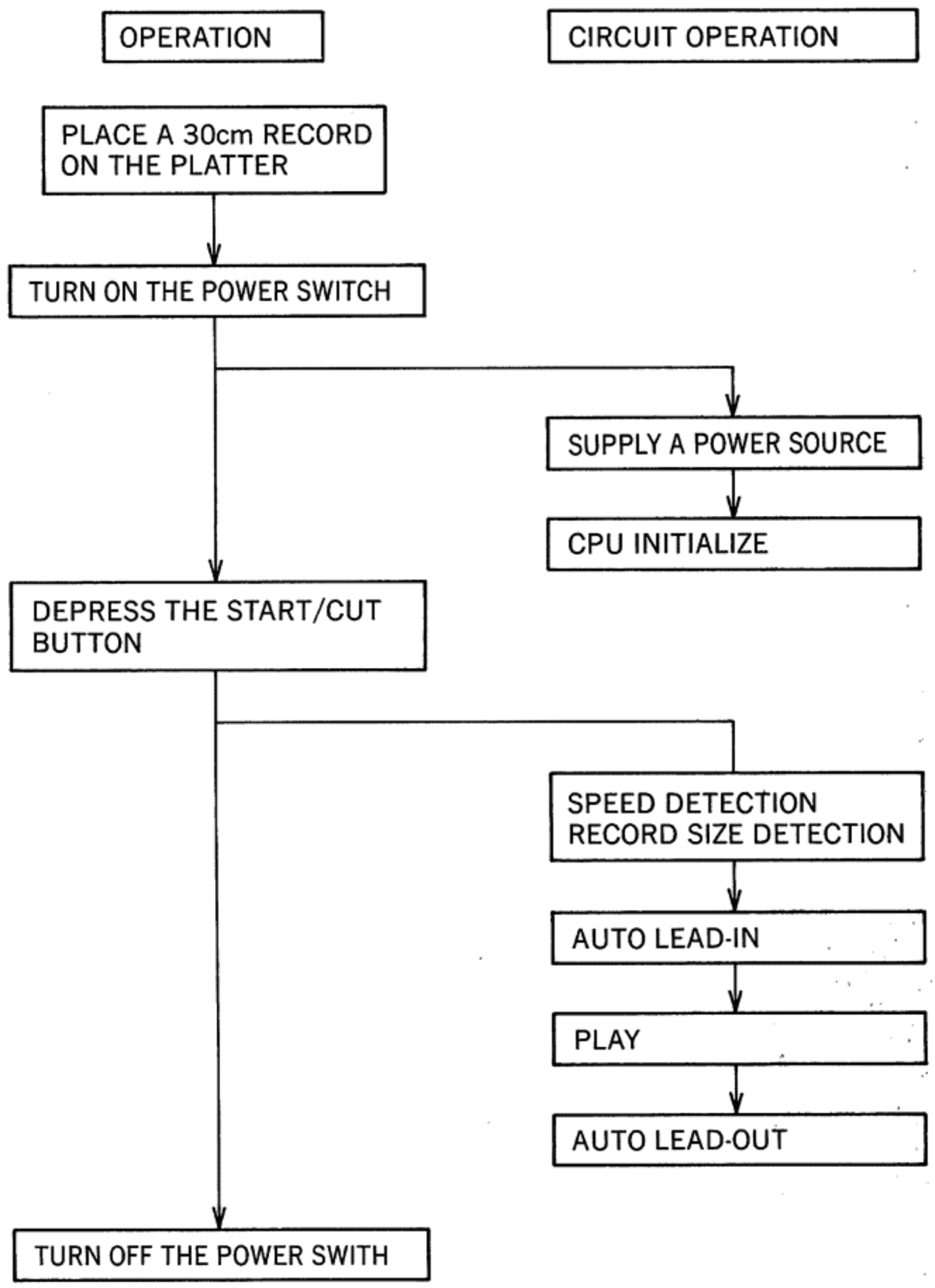

Fig. 7 Operation Chart

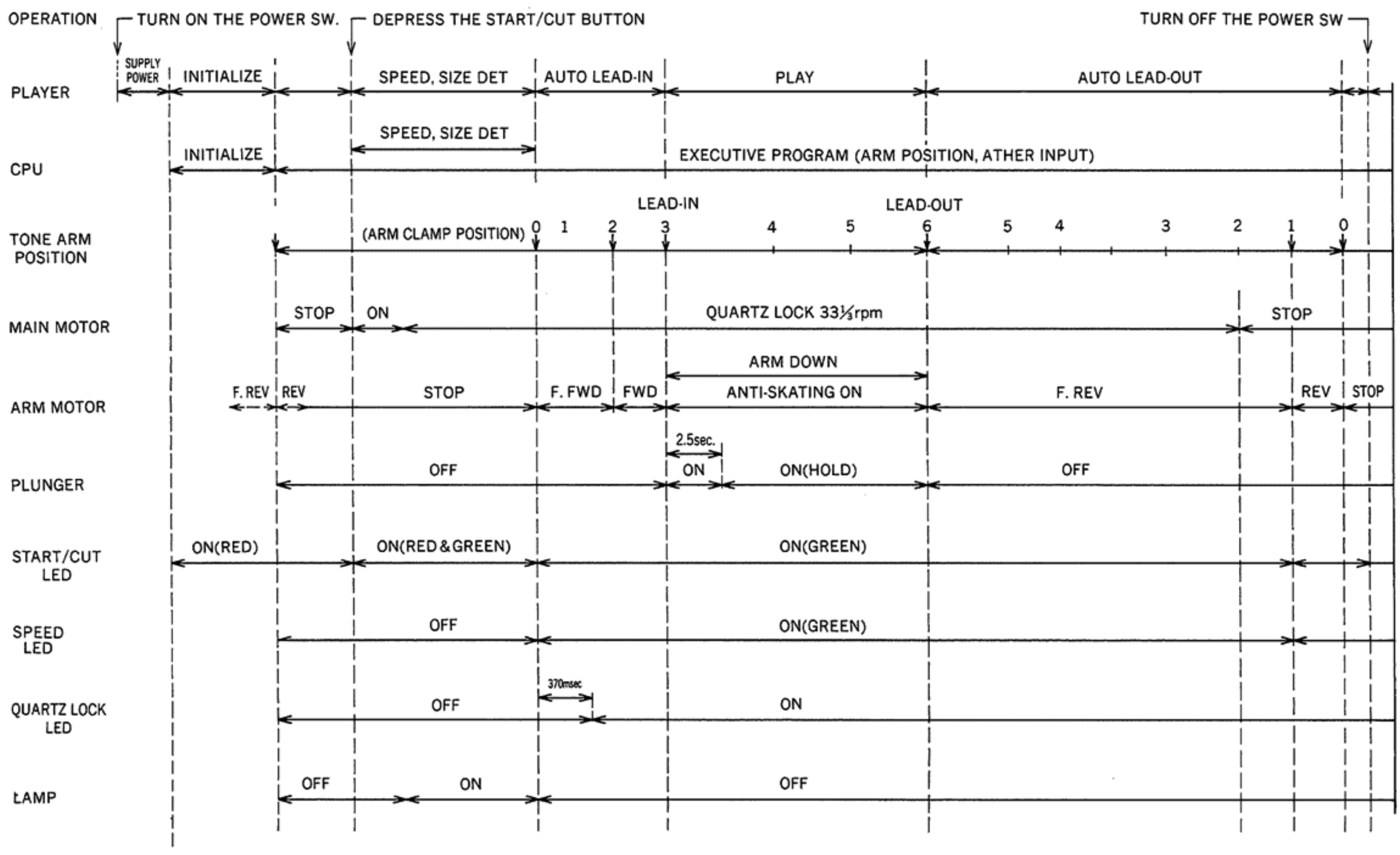

Fig. 8 Timing Chart (30 cm RECORD AUTO-PLAY)

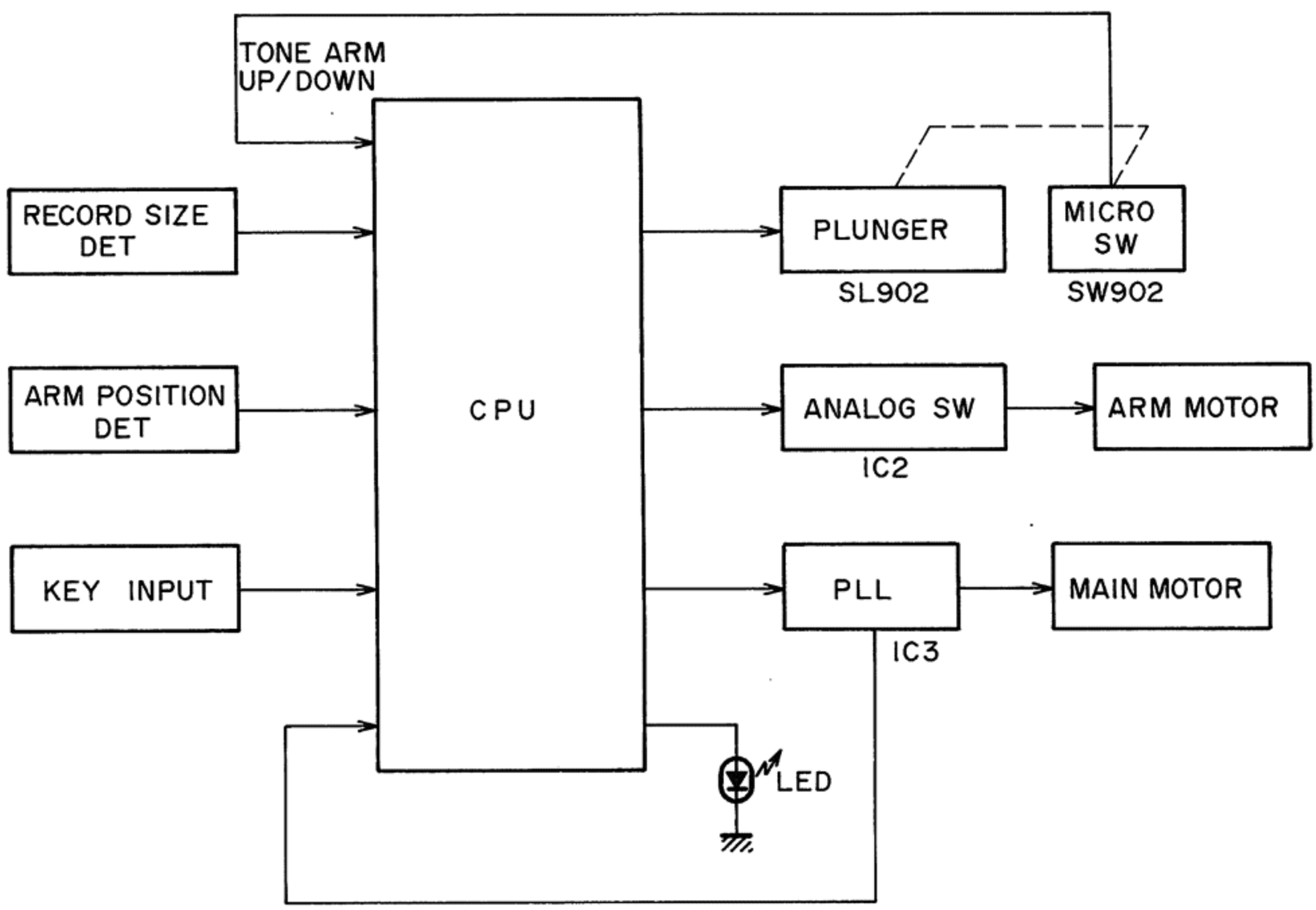

Fig. 9 Block Diagram

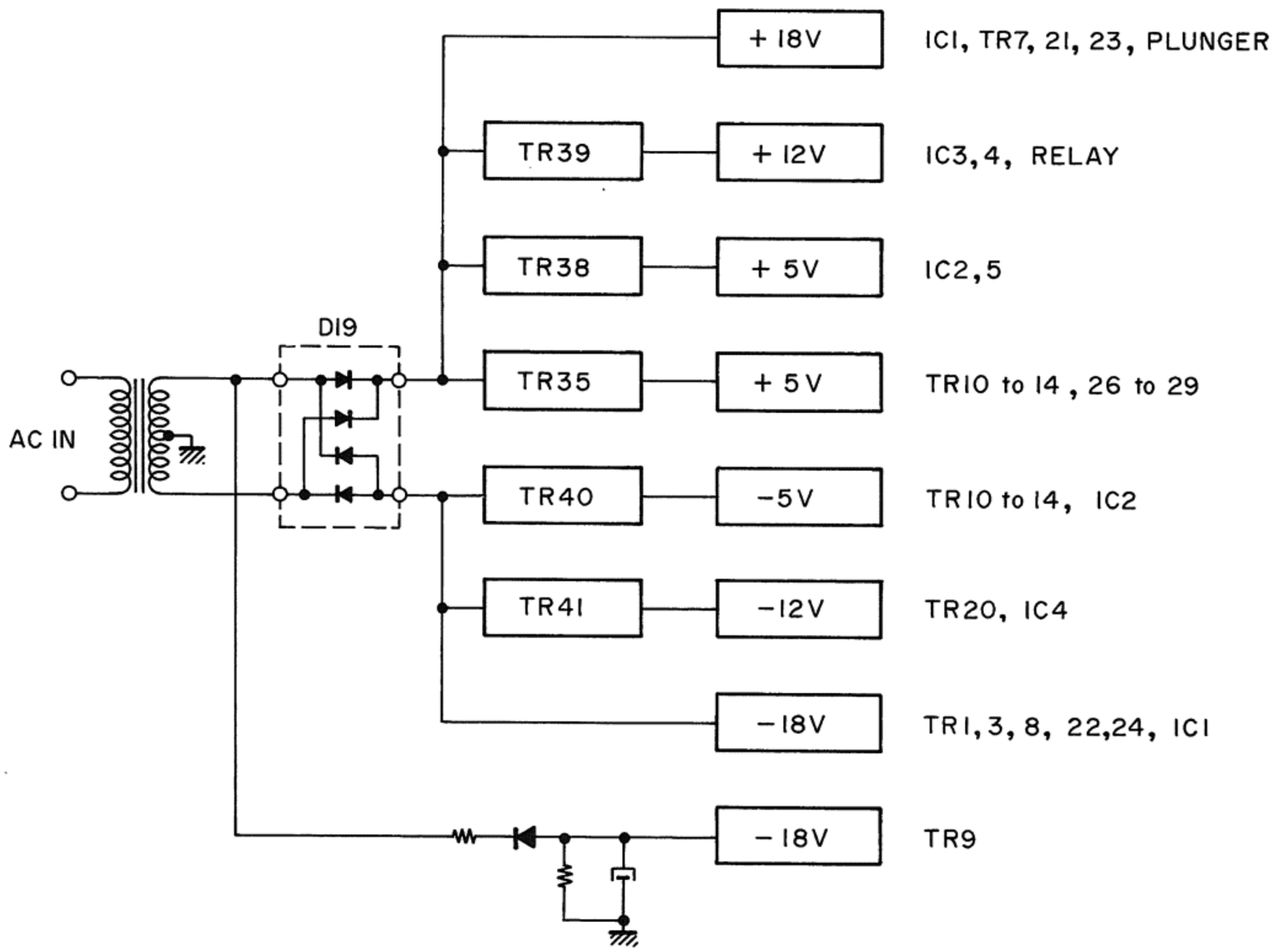

Fig. 10

3-2 POWER SUPPLY CIRCUIT

1) When the power supply is set to "ON" position, unregulated voltages, +18V and −18V, are produced by D19, C46 and C47 and TR36 is set "ON".
   Then, after a slight time lag, TR38, TR39, TR40 and TR41 are set "on", producing +5V, +12V, −5V and −12V, respectively.
   As TR38 and TR40 are set "on", TR37 is turned on, TR36 off and TR35 on, thus producing +5V. Since the +5V – produced when TR38 is turned on – is used as V_{DD} of CPU, it is produced earlier than the other +5V (supplied to a part other than CPU) which is produced when TR35 is turned on, thus preventing CPU from functioning erroneously.
   When the power supply is turned off, the +5V – produced when TR35 is turned on – is reduced to 0V earlier than the other 5V (for CPU V_{DD}) which is produced when TR38 is on, thus preventing CPU from functioning erroneously. (For description of functions, refer to 3-8).
2) When TR38 is turned ON to produce +5V, TR25 and TR26 are turned ON, because IC5 ⑬ (POWER IND/SENSING) is the open drain. As a result, the red LED for start/cut is lit, indicating that the power supply is "on".

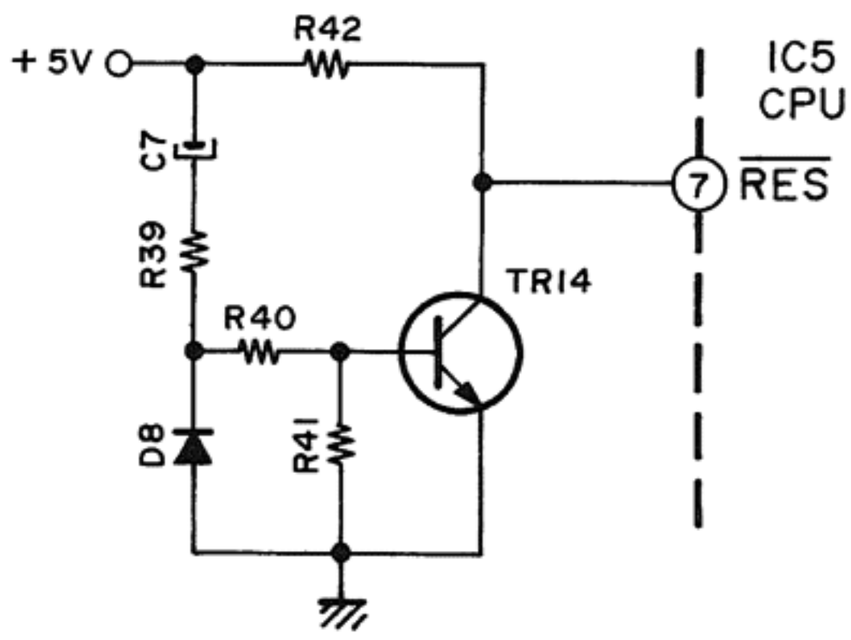

Fig. 11 Initialize

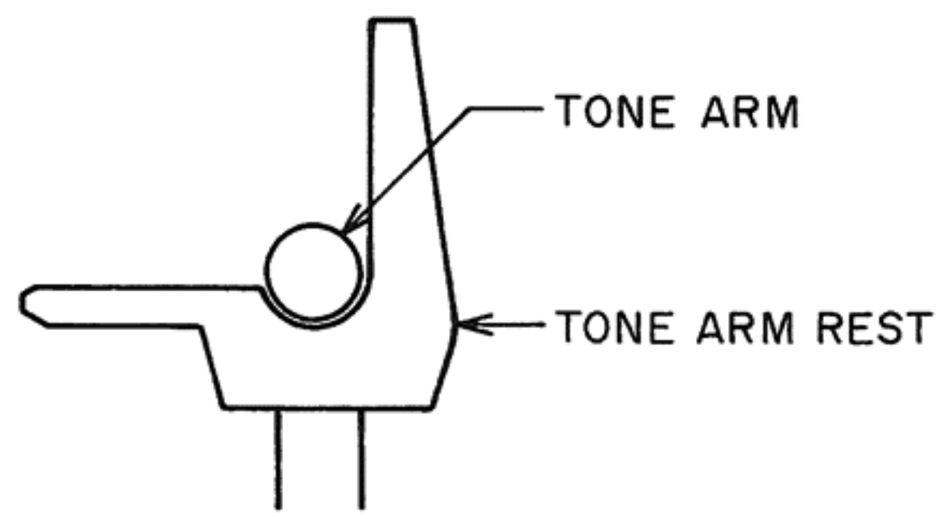

Fig. 12 Tone Arm Clamp Position

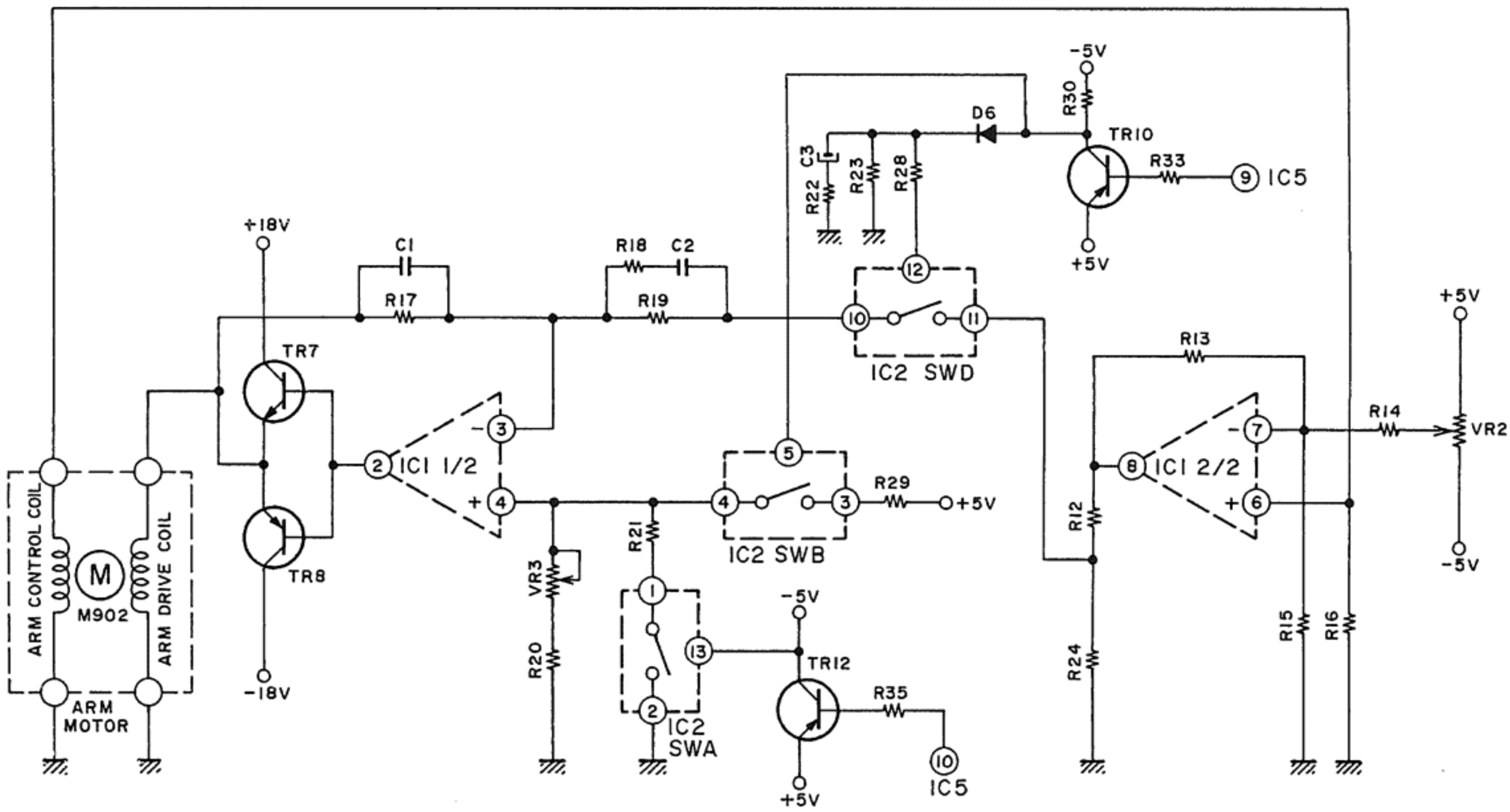

Fig. 13 Arm Drive Circuit (F. REV/REV)

3-3 INITIALIZE

1) When TR35 is on and +5V is produced, TR14 is kept on until C7 is charged and meanwhile, when TR14 is turned on, IC5 ⑦ ($\overline{\text{RES}}$) becomes "L" and CPU (IC5) is set to "INITIALIZE". (Refer to Fig. 11).
2) When the power switch is depressed while the tone arm is not placed at the tone arm clamp position, IC5 ⑨ (REV) becomes "L" and IC5 ⑩ (FAST) becomes "H", which will return the tone arm to the "tone arm clamp position".
   When IC5 ⑨ (REV) becomes "L", TR10 is turned on and, then, SW B and SW D of IC2 are turned on (Refer to Fig. 12 and 13).
3) Since the output from IC1 causes current to flow through TR7 and Arm Drive Coil, the tone arm quickly moves toward the arm rest (FAST REVERSE), but since the voltage induced in the arm control coil is applied to IC1 2/2 as non-reverse force input and the output from IC1 2/2 functions as reverse turn input of IC1 1/2, the speed of tone arm is controlled. The speed tone arm is adjusted by VR3. Speed is increased when VR3 is turned counterclockwise and slowed down when it is turned clockwise (Parts side view). VR2 is used for adjusting off-set voltage of IC1 2/2.
4) When the tone arm is set on the arm rest (Arm position 1), the "initialize" of CPU is completed (Note) while at the same time, IC5 ⑩ becomes "L" and TR12 ON → IC2 SW A ON and R21 is connected in parallel with R20 and VR3. Consequently, the tone arm is suddenly slowed down (Reverse).
5) CPU is designed so that it accepts the key input when "initialize" is completed.

NOTE: For the relationships between the arm position and arm motor, refer to Fig. 18.

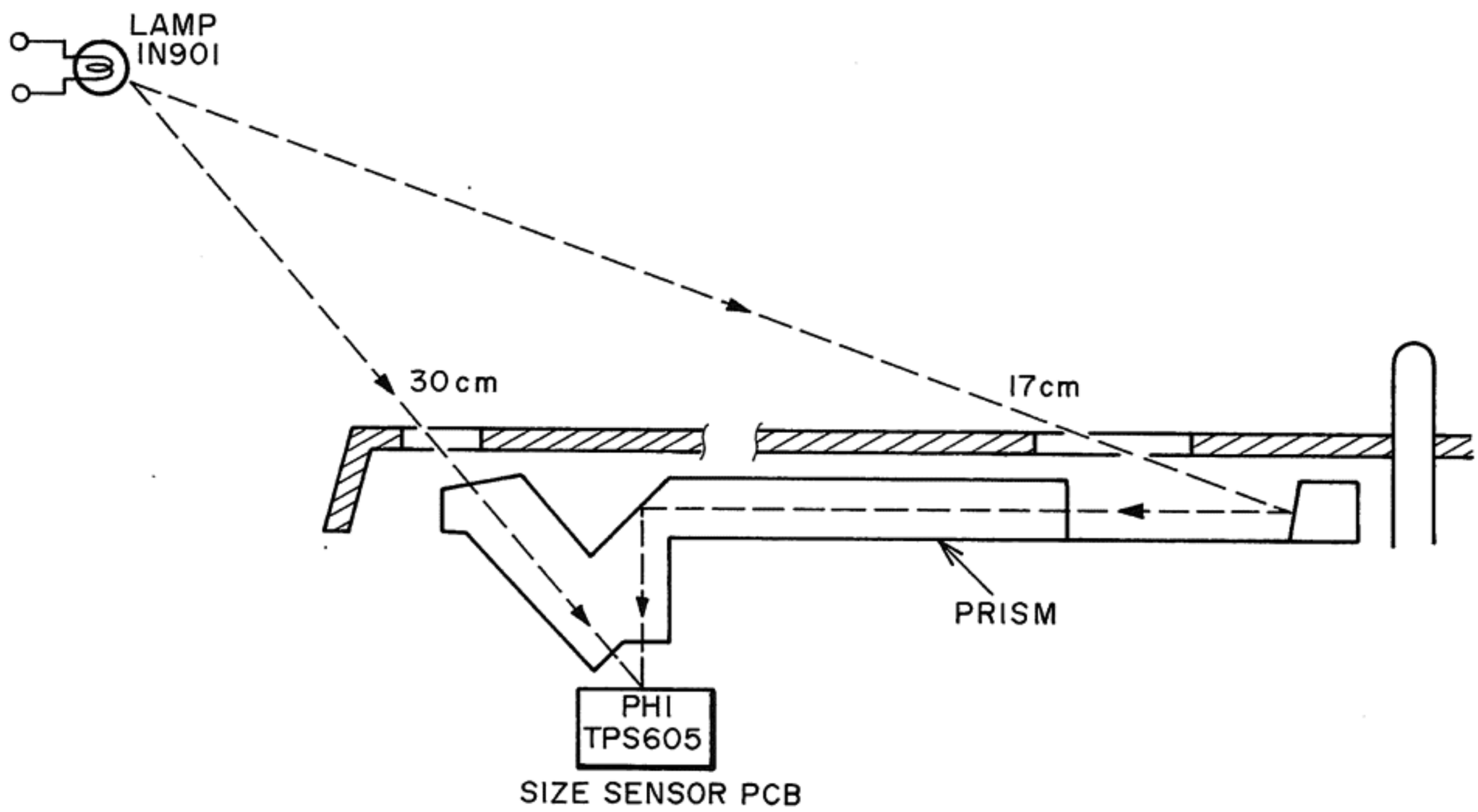

Fig. 14 Size Detection

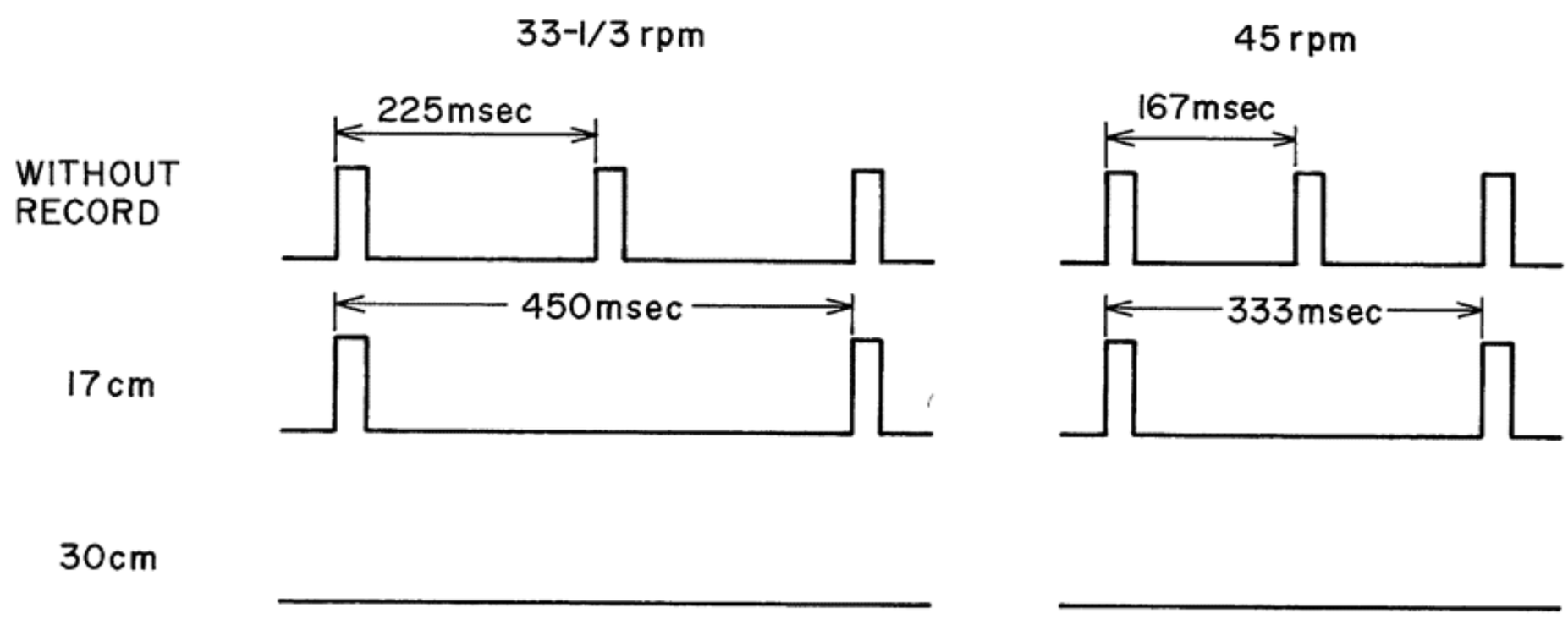

Fig. 15 Wave-form of each Record Size

3-4 DETECTION OF SPEED AND RECORD SIZE

1) When START/CUT button is depressed, IC5 ㉒ becomes "L" and, consequently, IC5 ⑮ and IC3 ⑪ become "L", thus turning the main motor.
   If the speed is NO set, IC5 ⑭ becomes "L" and, therefore, the speed is set to 33 1/3 rpm.
2) "L" and "H" alternately appear at IC5 ⑬ at 0.14 sec. cycles. When IC5 ⑬ is "L", TR27 is turned on and the green lamp LED for the START/CUT Button is lit. When IC5 ⑬ is "H", TR25 is on and TR26 is ON and, then, the red lamp LED for the START/CUT Button is lit. Therefore, the red and green LED for START/CUT Button turns on and off alternately, thus indicating that the record size is being detected.
3) When the number of revolution of main motor is set to the specified speed, IC3 ⑫ becomes "H", TR34 is turned on, IC5 ㉝ changes from "H" to "L", thus notifying CPU that the main motor is set to the specified number of revolution.
   Since IC5 ㉝ has changed to "L", IC5 ⑲ becomes "L" and the Quartz Lock Ind LED is lit.
4) As IC5 ㉝ is changed to "L", IC5 ⑪ also changes to "L", TR30 and TR31 are turned on and LAMP (IN901) is lit to illuminate the record. The record size (30 cm, 17 cm or no record) is judged by checking whether or not the light from lamp (IN 901) strikes the hole on the platter and, then, the number of revolution of main motor is determined. (Refer to Fig. 14.)
5) While the light from the lamp is not striking the photo transistor, the photo transistor is "off" and, therefore, TR32 is "ON" and IC5 ㉞ is "L". When the light from the lamp strikes the photo transistor, the photo transistor is turned on and while C32 is being charged, TR33 is turned on and TR32 is turned off, thus changing IC5 ㉞ to "H". When C32 is charged up, TR33 is turned off, TR32 is turned on and IC5 ㉞ becomes "L". In this circuit, the waveform of light is shaped in such a way that the light that strikes the photo transistor makes clear "L" and "H".

6) The following describes how to judge the record sized with the waveform shaped signal according to Fig. 15. Detection of record size starts when the "QUARTZ LOCK ON" signal has entered CPU. This timing coincides with the time when the lamp is lit. Record size detection is completed when the lamp is turned off. When the record size is 30 cm, absolutely no pulses enter into the CPU, but when a 17 cm record is set, pulses always enter, if waited for more than 450 msec.
When no record is set, the next pulse always enters if waited for 225 msec. or longer. Fig. 15 clearly shows it.
Therefore, the program of CPU are set as follows;

30 cm record ..... When pulses do not enter for 560 msec. after "Quartz ON".

17 cm record ..... Pulses enter for 560 msec. after "Quartz "ON", but, do not enter for 280 msec. thereafter.

No record ..... When the next pulse enter for 280 msec. after the first pulse enters following "Quartz ON".

3-5 AUTO LEAD IN

1) When the record size is judged, IC5 ⑪ is changed to "H" and the lamp is turned off. Since the record size is judged as 30 cm record, the main motor is turned at 33 1/3 rpm and, therefore, IC5 ⑭ and ⑮ are kept on "L" while at the same time, IC5 ⑬ and ⑯ are also kept on "L".
As IC15 ⑬ is "L", TR27 is turned on and the green lamp LED for START/CUT BUTTON is lit and also IC5 ⑧ (RWD) is set to "L" and IC5 ⑩ (FAST) is set to "H".
Now, since IC5 ⑧ becomes "L", TR11 is turned on while SW D and SW C of IC2 are turned on.
Fig. 16 shows the arm drive circuit.
Unlike the arm drive circuit shown in Fig. 13, negative (−) voltage is applied to IC1 1/2 ④ and, therefore, the output of IC1 1/2 is also negative (−), thus allowing the current to flow through TR8 and the arm drive coil. As a result, the TONE ARM quickly moves toward the spindle (Fast Forward).
The speed control functions in the same manner as in the case of the fast reverse.

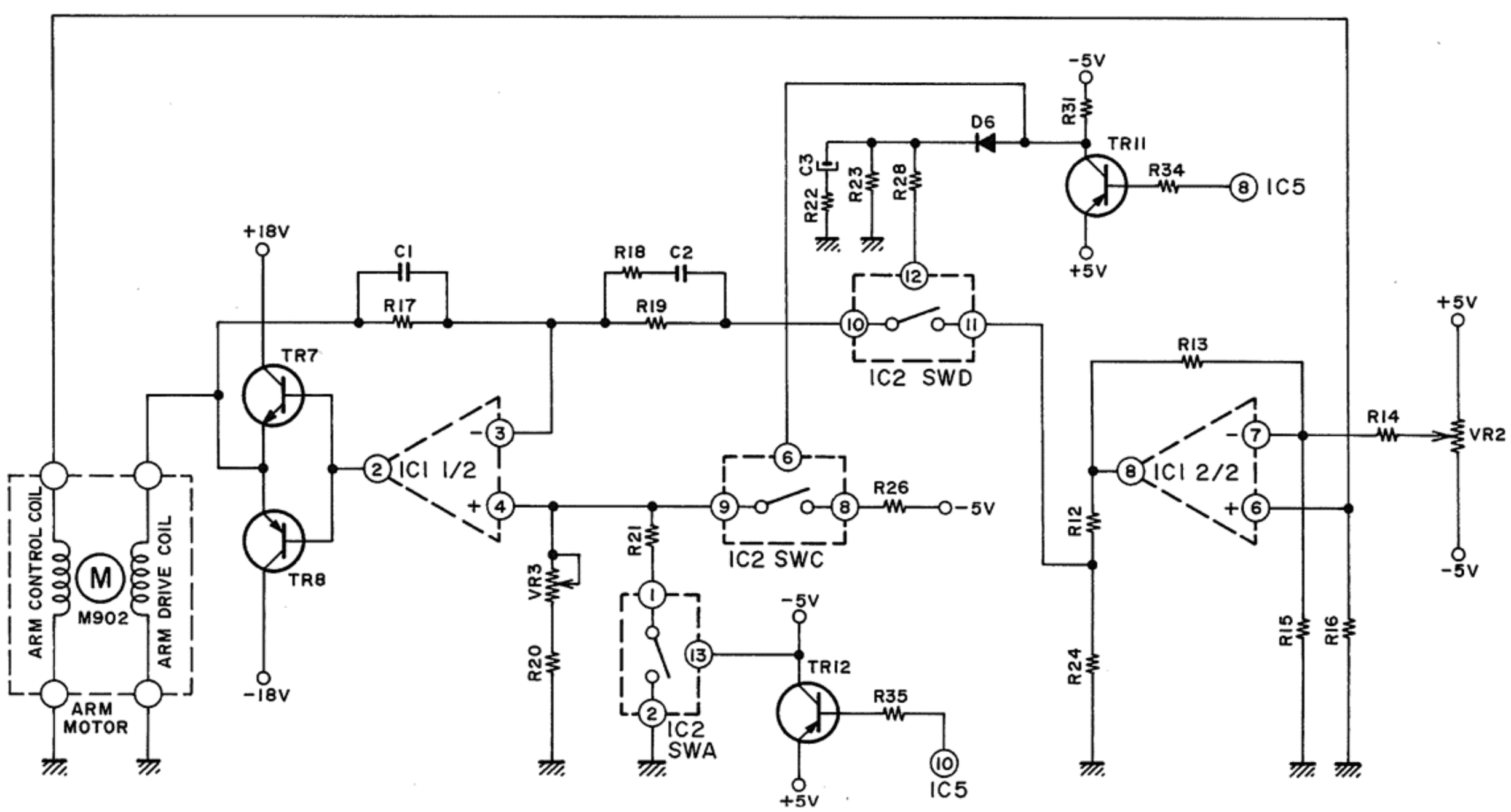

Fig. 16 Arm Drive Circuit (F. FWD/FWD)

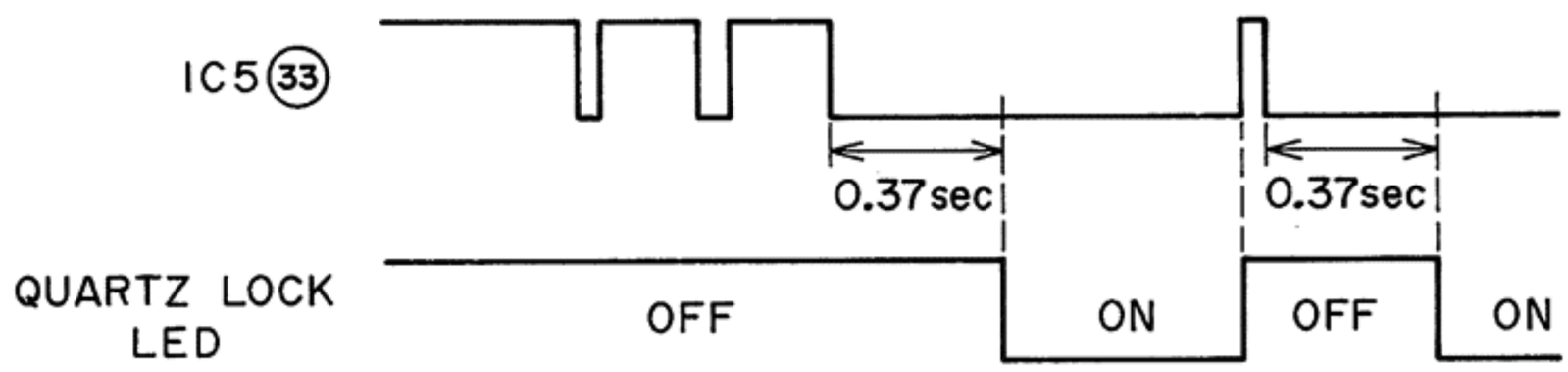

Fig. 17

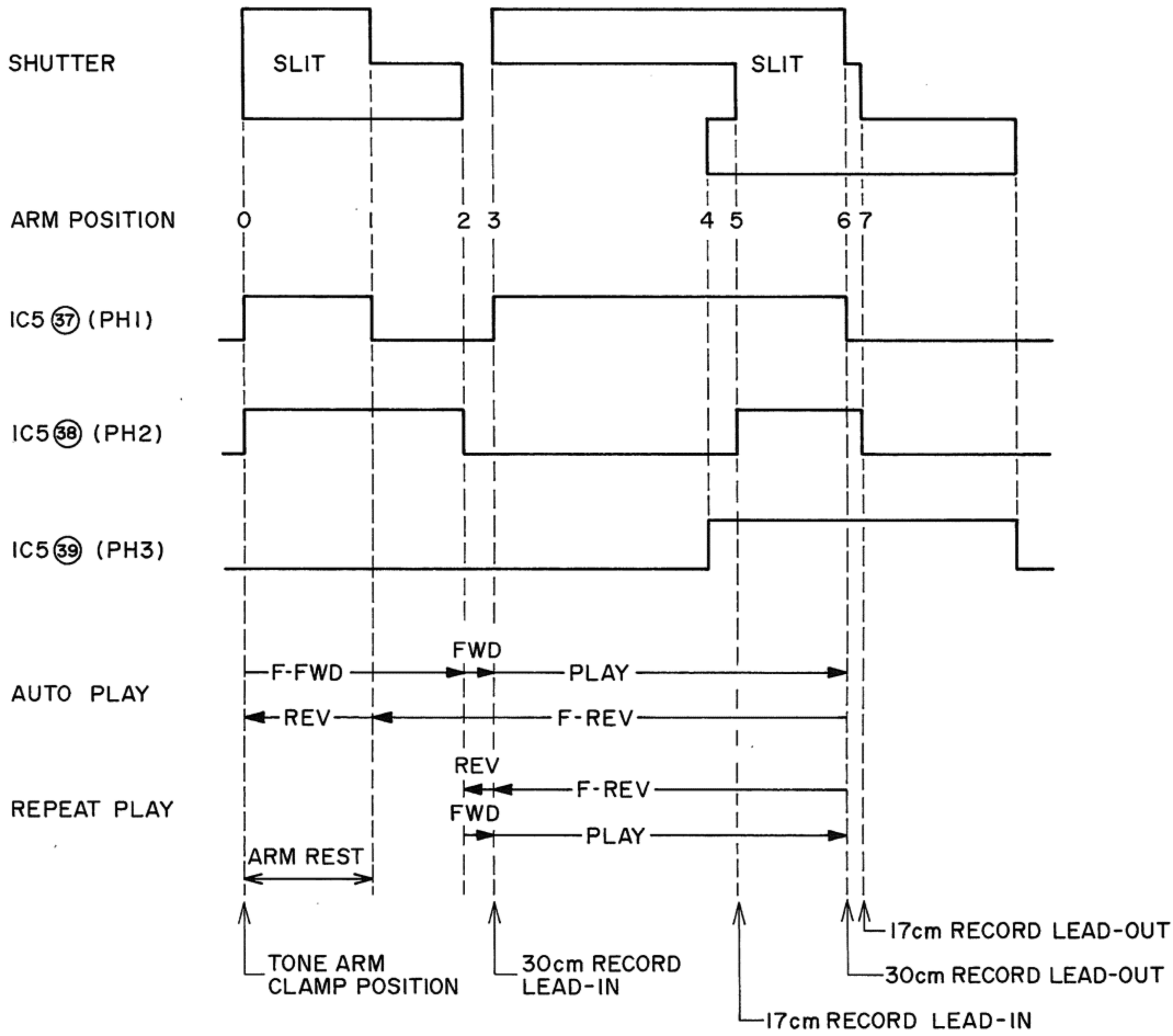

Fig. 18 Arm Position Sensor

2) When IC5 ㉝ is "L" for 0.37 sec after the speed button LED is lit, IC5 ⑲ becomes "L" and the quartz lock LED is lit (Refer to Fig. 17).
3) The output of photo transistor changes depending on the shape of shutter slit and as this output changes, the position of tone arm is detected (Refer to Fig. 17).
   When the tone arm moves to the position "2", IC5 ⑩ (FAST) becomes "L" and as IC5 ⑩ becomes "L", TR12 is turned on, IC2 SW A is turned on and, then, R21 is connected in parallel with R20 and VR3. Therefore, the tone arm is suddenly slowed down. (FORWARD)
   When the tone arm arrives at the position "3", IC5 ⑧, ⑨ and ⑩ become "H", "H" and "L", respectively, thus stopping the tone arm.
   At the same time, IC5 ② and ③ become "L", TR3 and TR4 are turned on and TR1 and TR2 are also turned on.
   Now, approx. 30V of high voltage is supplied to plunger (SL902) and the plunger withdraws the arm shifter.

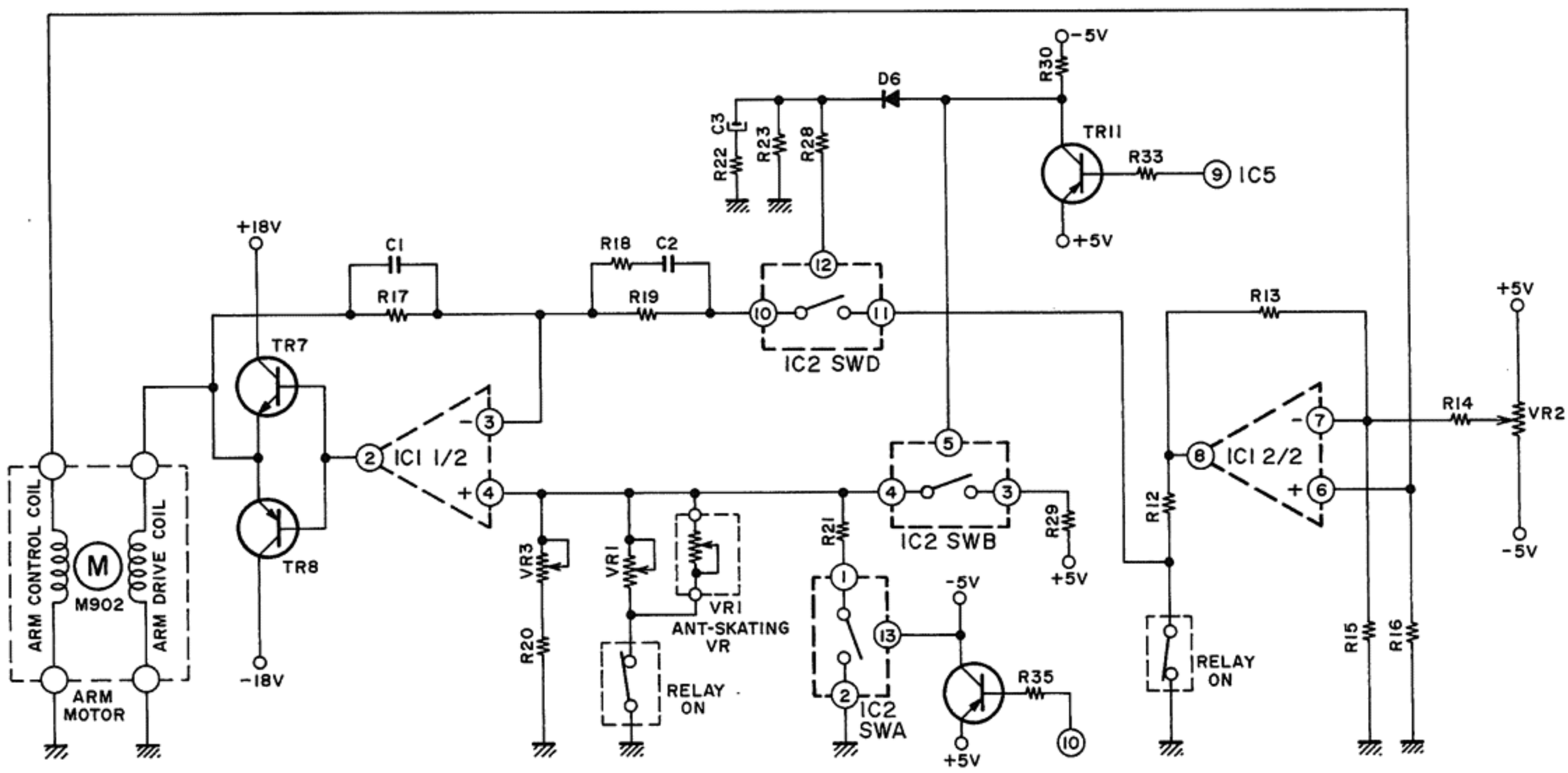

Fig. 19 Anti-skating Circuit

4) When the plunger has withdrawn the arm shifter, SW902 is closed and IC5 ㉟ (ARM UP) becomes "L". Then, 0.15 sec. later, IC5 ④, ⑨ and ⑩ are set to "L". When IC5 ④ (ANTI-SKATING) becomes "L", TR5 and TR6 are turned on and +12V is applied to the relay, thus actuating the relay.
As IC5 ⑨ (REV) and ⑩ (FAST) are set to "L", TR13 is kept "on" while C6 is charged and, consequently, +5V is applied to the BASE of TR10 and TR10 is immediately turned on even though IC5 ④ is "L" level.
When C6 is completely charged, TR13 is turned off and TR10 is turned on; thus turning on IC2 SW D.
Fig. 19 shows the Anti-skating circuit.
R21, VR1 (Semi-Fix) and VR1 (Anti-skating VR) are set between IC1 1/2 ④ and GND while the reverse input side is grounded and separated from the control coil. Therefore, the tone arm slowly moves toward the arm rest direction. Note that since this slow moving force is weak, anti-skating effect is applied.
VR1 is a volume installed on the front surface of the player and when this volume is set to the minimum (0) position the anti-skating effect is eliminated.

3-6 PLAY

When the anti-skating starts functioning, the needle moves down onto the record and the record starts playing.
As 4.71 sec. has passed after the plunger started pulling at high voltage of approx. 30V, IC5 ③ becomes "H" while TR3 and TR1 are turned off. Therefore, a half of voltage (approx. 15V) is applied to the plunger to keep "Hold" position.

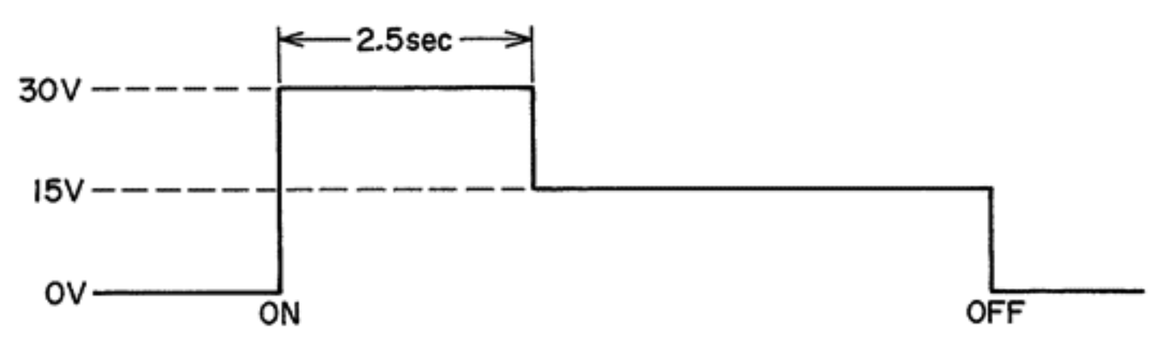

Fig. 20 Voltage of Plunger

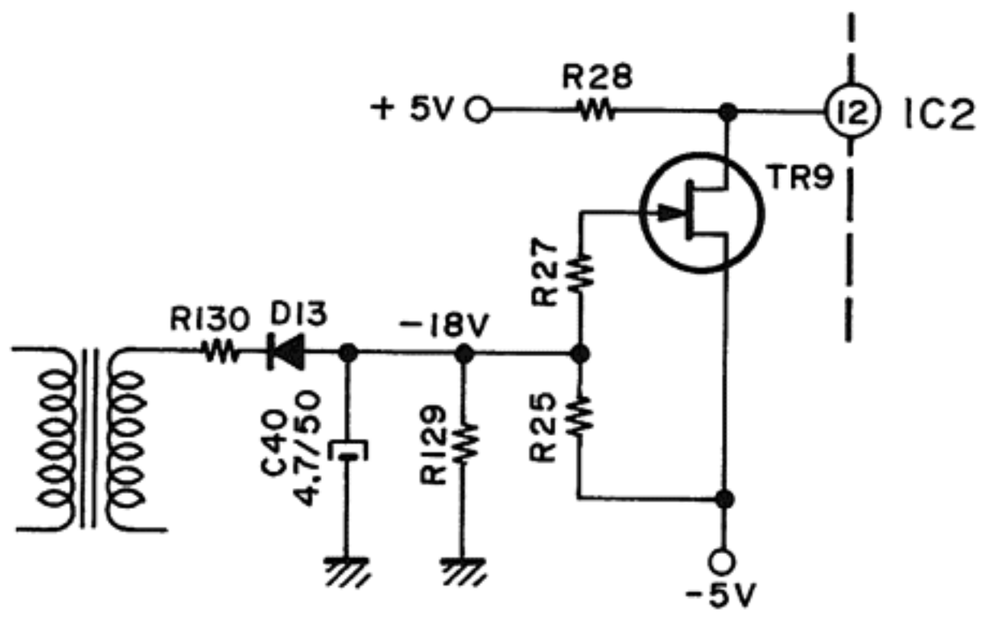

Fig. 21

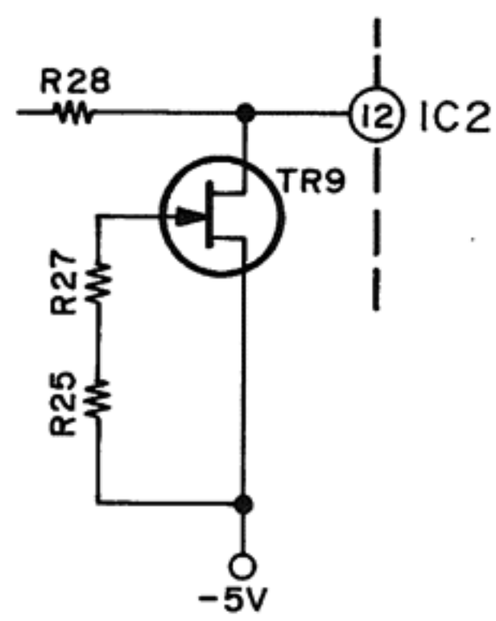

Fig. 22

3-7 AUTO LEAD-OUT

1) When the record has been played completely and the arm position has shifted to "6", the CPU judges that the arm has arrived at LEAD-OUT position and sets IC5 ② (PLUNGER) to "H". Therefore, TR4 and TR2 are turned off, the plunger is released and the arm lifter rises.
2) When the arm lifter has risen and SW902 opens, IC5 ㉟ (ARM UP SW) becomes "H".
   Then, 0.14 sec. later, IC5 ④ (ANTI-SKATING) becomes "H", TR1 and TR6 are turned off and the ANTI-SKATING is stopped from functioning while at the same time, IC5 ⑨ (REV) changes to "L" and IC5 ⑩ (FAST) changes to "H" while the tone arm is fast reversed (same circuit as shown in Fig. 13).
3) When the tone arm comes to the position between "2" and "1", IC5 ⑮ (MAIN MOTOR) becomes "H" and sents STOP signal to IC3 ⑪.
   As a result, brake is applied to the main motor and IC3 ⑫ becomes "H", thus turning on TR34 and changing IC5 ㉝ to "L".
   Now, IC5 ⑲ (QUARTZ LED) becomes "H" and the Quartz Lock LED is turned off.
4) When the tone arm is set to position "1", IC5 ⑩ (FAST) becomes "L" and the tone arm is set from Fast Reverse to Reverse while at the same time IC5 ⑬ and ⑯ becomes "H".
   As IC5 ⑬ (POWER IND/SENSING) becomes "H", TR25 and TR26 are turned on and LED for START/CUT Button is lit from green to red.
   When IC5 ⑯ (33 1/3 LED) is set to "H", TR28 is turned off and the speed button LED is turned off.
5) When the tone arm is set on the position "1" and, then, contineously reversed for 2.5 seconds, IC5 ⑨ (REV) becomes "H" and TR10 is turned off, thus stopping the tone arm.
   At this time, the tone arm is set on the arm clamp position ("0").

3-8 POWER SUPPLY CIRCUIT (when power supply is turned off)

1) When the power switch is turned off, more current is flowing on the positive (+) side than on the negative (−) side and, therefore, each voltage on the positive side (+) becomes "0"V quicker than the voltage on the negative (−) side.
2) Since the voltage drop of the BASE of TR37 is fast, TR37 is turned off and, as TR37 is turned off, TR36 is turned on and the BASE voltage of TR35 is reduced to "0"V. Therefore, +5V by TR35 is instantaneously dropped to "0"V when the power supply is turned off.
3) When the power is supplied, TR9 connected to IC2 ⑫ is off (Refer to Fig. 21).
   When the power is turned off, TR9 is immediately turned on, because the capacity of C40 is very small (Refer to Fig. 22).
   Consequently, −5V is supplied to IC2 ⑫ and IC2 SW D is not turned on.
   These arrangements prevent the CPU from functioning erroneously when the power is turned on and off and the record is prevented from being scratched by the needle when the power supply stops.

3-9 REPEAT PLAYBACK

The "repeat play" can be performed by depressing the repeat button while the tone arm is in the auto return mode and is set on a position between "6" and "3".
When the repeat button is depressed, IC5 ㉔ (REPEAT) changes from "H" to "L" and IC5 ⑱ (REPEAT) becomes "L".
Therefore, D11 is turned on and the LED for repeat button is lit. As the tone arm moves to position "3", IC5 ⑩ (FAST) becomes "L", the tone arm is slowed down and shifted from the fast reverse to the reverse. Furthermore, when the tone arm comes to position "2", IC5 ⑨ (REV) becomes "H" and IC5 ⑧ (FWD) becomes "L".
Therefore, the moving direction of tone arm is reversed to FORWARD and when the tone arm is set to position "3", the LEAD-IN operation is actuated.

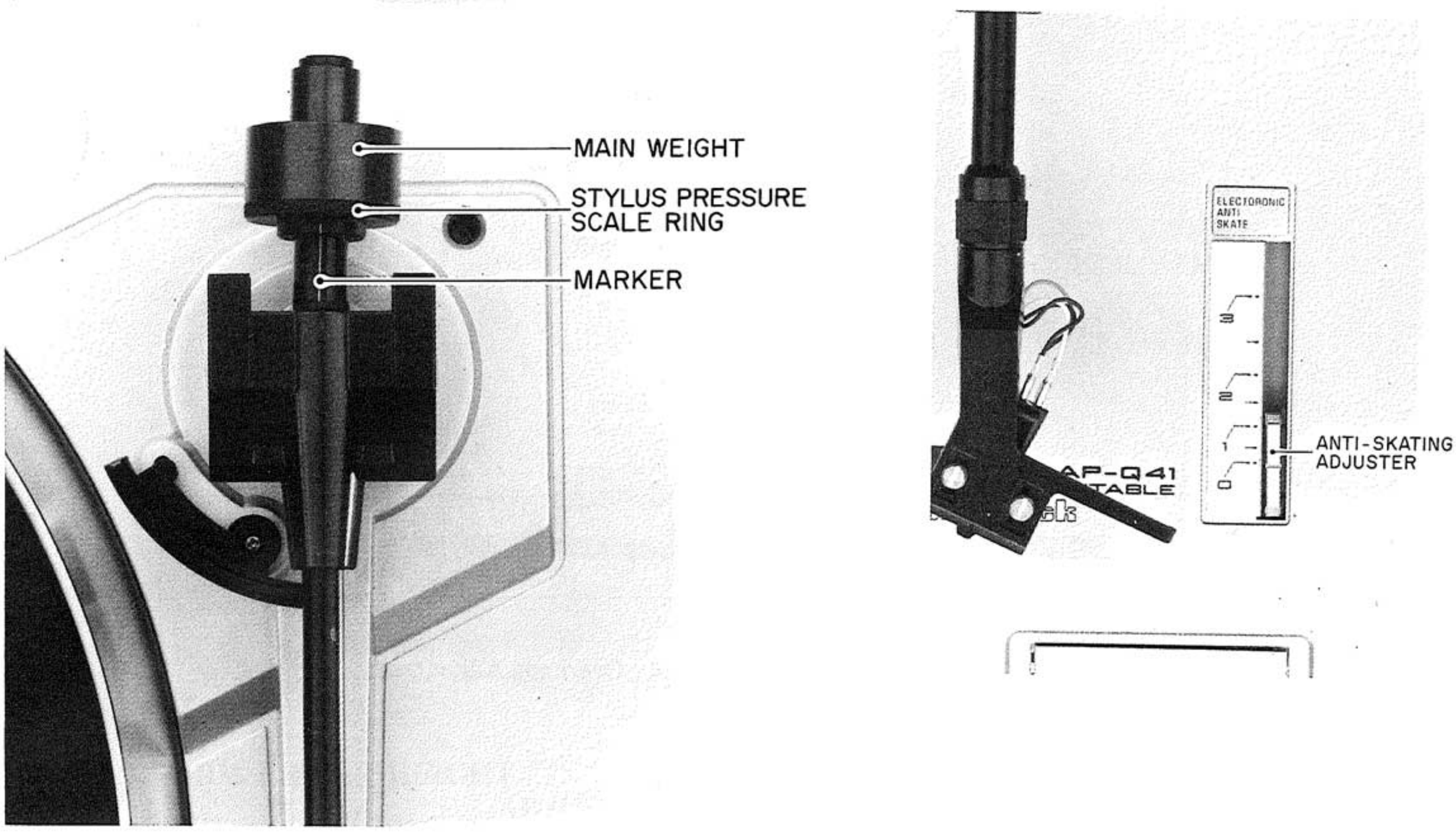

Fig. 23 Stylus Pressure Adjustment

1. STYLUS PRESSURE ADJUSTMENT

1) Connect power cord and turn ON (▬) the POWER switch.
2) Set the Anti-skating Adjuster to "0".
3) Unlock the Tone Arm and bring it towards the Platter.
   * Remove the stylus Guard being careful not to damage the Stylus.
4) With the Tone Arm held midway between the Tone Arm Rest and the rim of the Platter, depress the Cueing (▼/▼) button, to lower the Tone Arm Lifter.
5) Adjust the Main Weight until the Tone Arm is in perfect horizontal balance.

6) Without moving the Main Weight, rotate the Stylus Pressure Scale Ring only to match the "0" mark with the mark on the weight shaft.
7) Return the Tone Arm to the Tone Arm Rest.
   * The Tone Arm Lifter will rise.
8) Lock the Tone Arm in place and rotate the Main Weight counterclockwise, as viewed from the front (the Stylus Pressure Scale Ring will move with it), until the desired Stylus Pressure Scale indication is at the mark on the shaft.
   The range of adjustment is from 0 to 2.5 grams.
   * For AP-Q41C only: The recommended stylus pressure for the cartridge supplied, SMB-12, is 1.5 grams.
9) Set the Anti-skating Adjuster to the corresponding stylus pressure.

2. OVERHANG (Not necessary for AP-Q41C)

The distance between the Spindle and the Stylus when the Tone Arm is centered over the Platter is known as the Overhang.
Different cartridges require different Overhang Adjustments.
For your convenience, the Rubber Mat has indicator grooves at the center to facilitate Overhang Adjustment.

1) Center the Tone Arm over the Platter.
2) Adjust the Cartridge so that the Stylus position is even with the Groove for Overhang Adjustment.
   * The Cartridge position can be adjusted by re-setting the Cartridge Re-Setting Screws in the Head Shell.

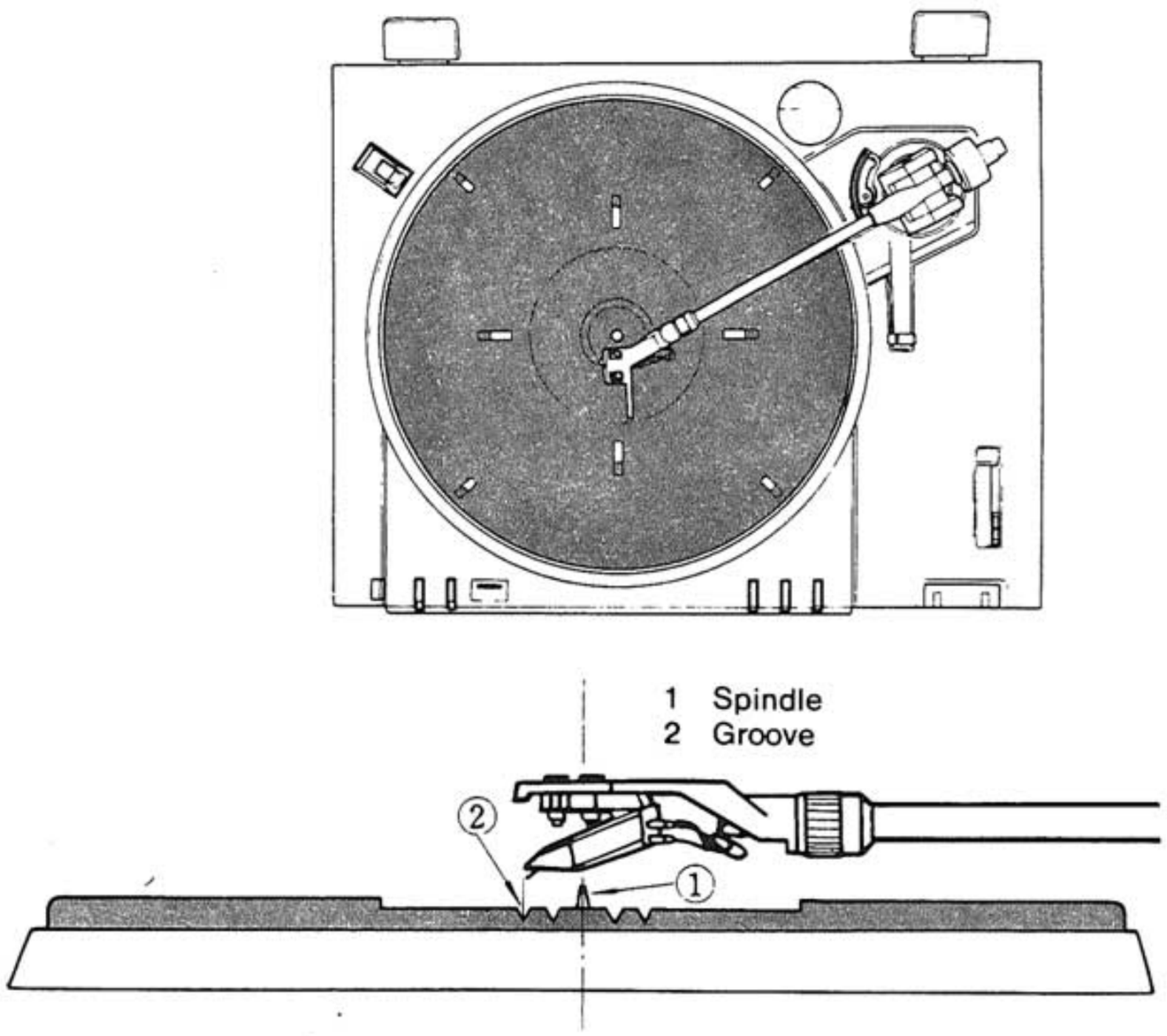

Fig. 24 Overhang Adjustment

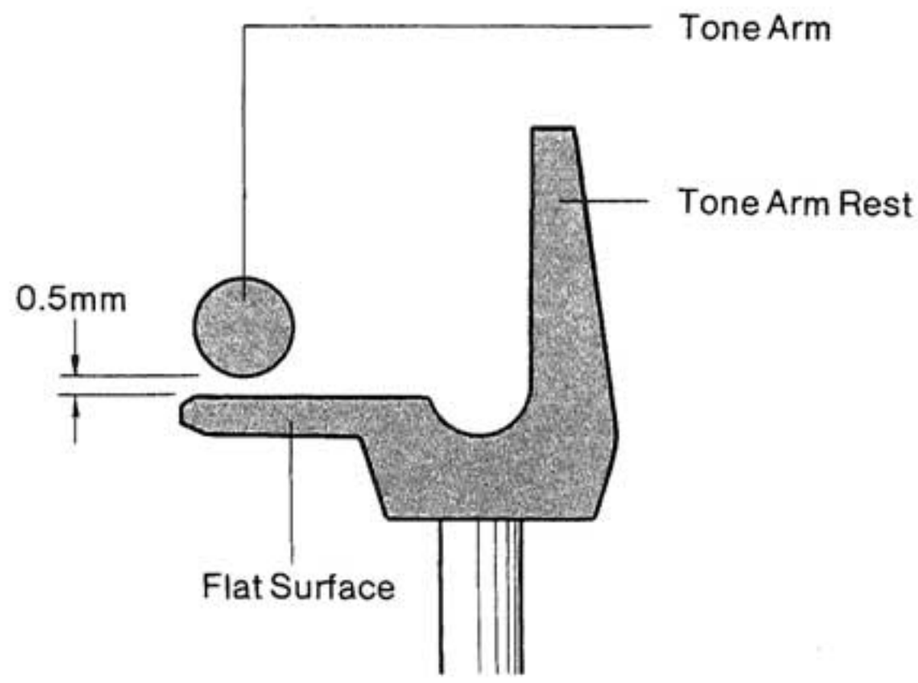

Fig. 25 Tone Arm Lifter Height Adjustment

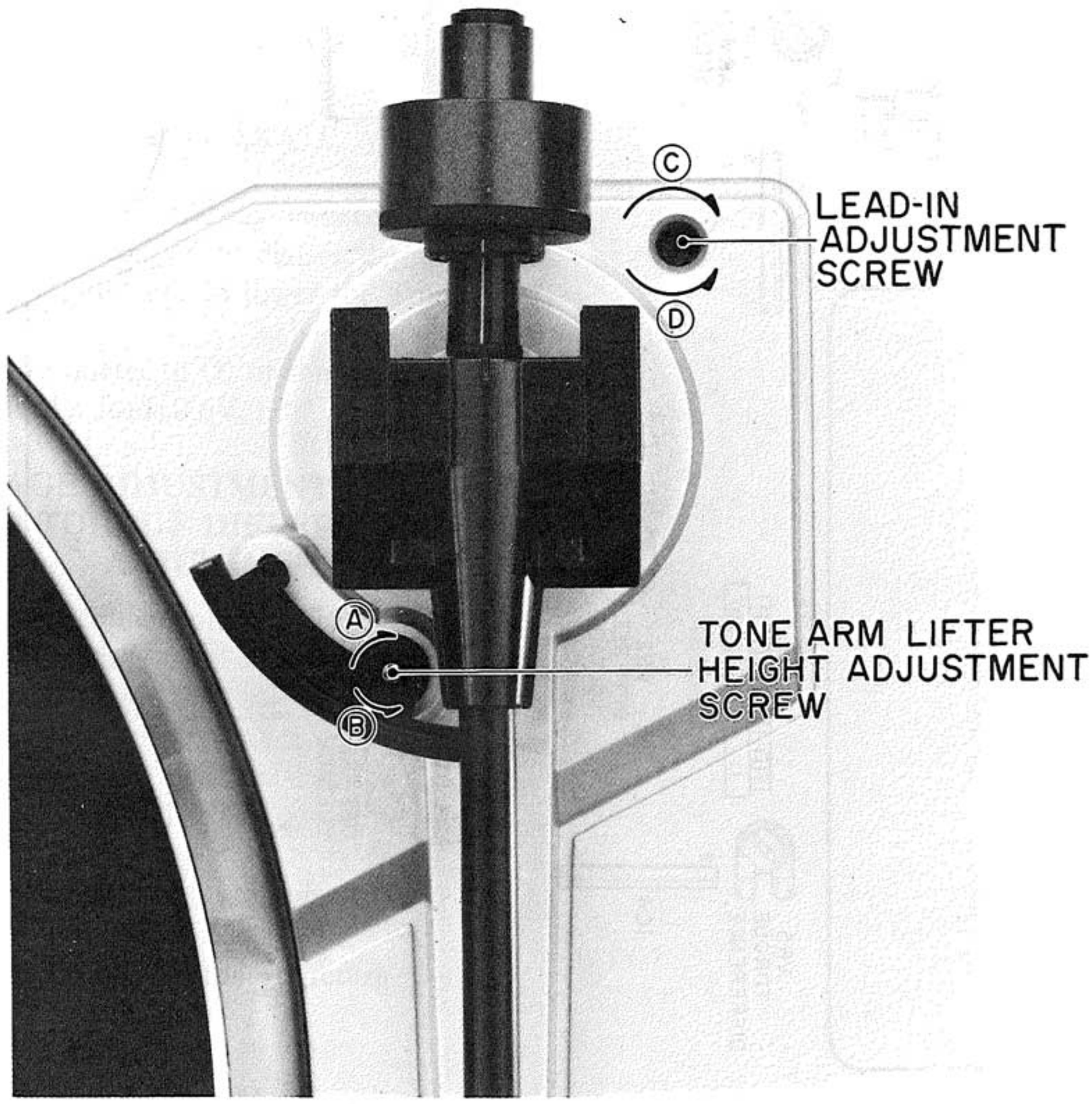

Fig. 26 Tone Arm Height Adjustment, Lead-IN Adjustment

3. TONE ARM LIFTER HEIGHT ADJUSTMENT

With the Tone Arm in the up-position, the Stylus should be more than 4 mm above the surface of the record and the Tone Arm should be 0.5 mm above the flat surface of the Tone Arm Rest.
If it is not, adjust the height by adjusting the Tone Arm Lifter Height Adjustment Screw.

Ⓐ Clockwise: down
Ⓑ Counterclockwise: up

4. LEAD-IN POSITION ADJUSTMENT

1) Place a record on the Platter.
2) Auto-play the record and confirm where the Stylus descends.
3) Depress the START/CUT button to return the Tone Arm to the Tone Arm Rest.
4) Turn the Lead-in Adjustment Screw with a screwdriver:
   Ⓒ Clockwise: To make the Stylus descend towards the Spindle.
   Ⓓ Counterclockwise: To make the Stylus descend away from the Spindle.

NOTE: Do not turn the screw too far.
Carry out the adjustment little at a time and confirm the position after each adjustment.

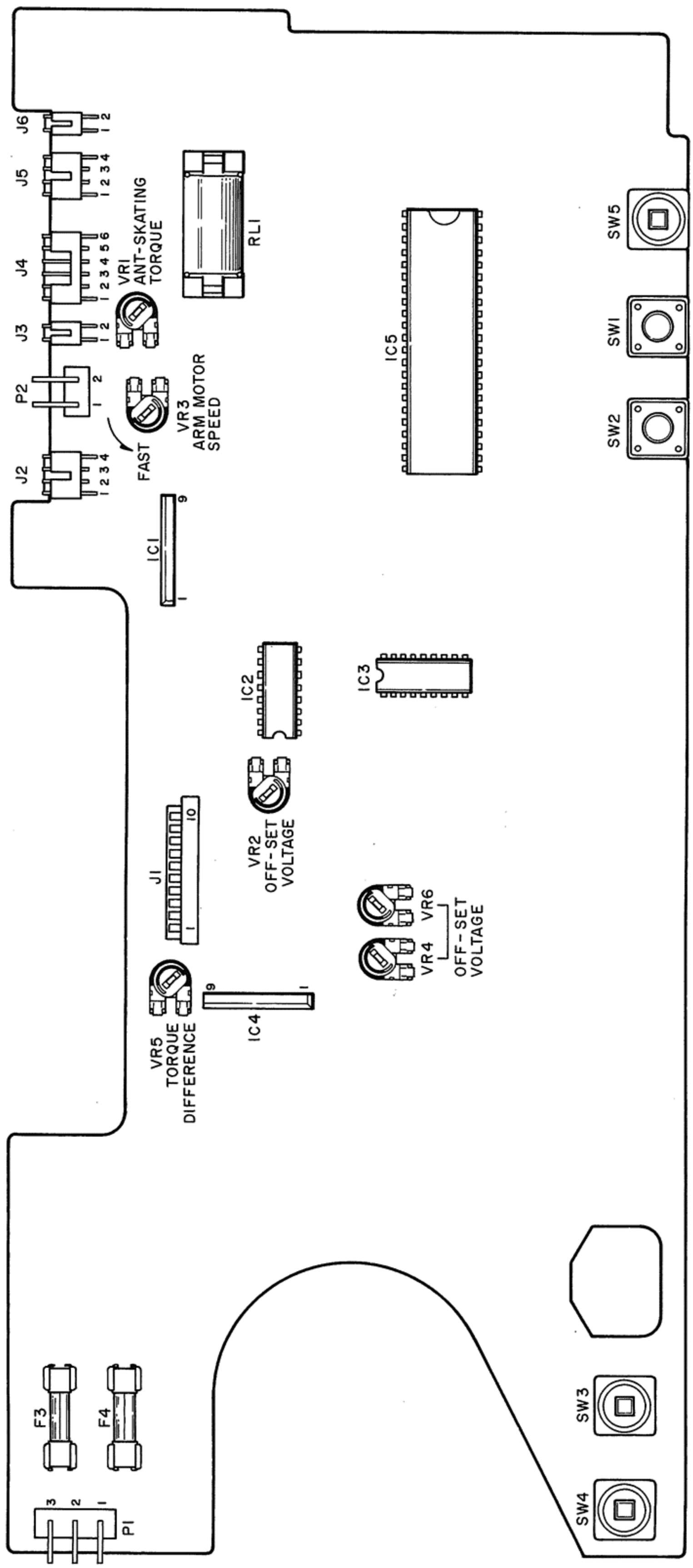

Fig. 27 Servo/Syscon PCB (Parts Side View)

1. OFF-SET VOLTAGE ADJUSTMENT (VR2)

1) Turn on the Power Switch.
2) Lock the Tone Arm to Tone Arm Rest.
3) Connect an digital voltmeter to ⑧ of IC1 and adjust VR2 until it reads 0V.

2. ARM MOTOR SPEED ADJUSTMENT (VR3)

1) Turn on the Power Switch.
2) Set the Tone Arm to Tone Arm Rest.
3) Connect a digital voltmeter to ② of connector J2.
4) Depress the SLOW REV (>≫) Button, and adjust VR3 until it reads 7V.

3. ANTI-SKATING TORQUE ADJUSTMENT (VR1)

1) Turn on the Power Switch.
2) Set the ELECTRONIC ANTI SKATE VR to Maximum ("3").
3) With the Tone Arm held midway between the Tone Arm Rest and the rim of the Platter, depress the Cueing (▼/▼) Button, to lower the Tone Arm Lifter.
4) Connect a digital voltmeter to ② of connector J2 and adjust VR1 until it reads 0.6V.

4. OFF-SET VOLTAGE ADJUSTMENT (VR4, VR6) AND TORQUE DIFFERENCE ADJUSTMENT (VR5)

1) Disconnect the motor connection cord (J1).
2) Short connector (J1) pins ⑦, ⑧ and ①.
3) Set VR5 to center position.
4) Turn on the Power Switch.
5) Depress the Forward (≪<) button to bring the Tone Arm over the record. The Platter will begin ratating.
6) Connect a digital voltmeter to ⑩ of connector J1 and adjust VR6 until it reads −120 mVDC.
7) Depress the START/CUT Button to return the Tone Arm to the Tone Arm Rest.
8) Turn off the Power Switch.
9) Short connector J1 pins ④, ⑤ and ①.
10) Turn on the Power Switch.
11) Depress the Forward (≪<) button to bring the Tone Arm over the record. The Platter will begin ratating.
12) Connect a digital voltmeter to ⑨ of connector J1 and adjust VR4 until it reads −120 mVDC.
13) Depress the START/CUT Button to return the Tone Arm to the Tone Arm Rest.
14) Turn off the Power Switch.
15) Connect the motor connection wire to connector J1.
16) Connect an oscilloscope to ⑨ and ⑩ of connector J1.
17) Depress the Forward (≪<) Button to bring the Tone Arm over the record. The Platter will begin ratating.
18) Adjust VR5 so that the voltage of connector J1's ⑨ and ⑩ may be same. (The voltage indicated in ⑨ and ⑩ is for switching motor coil, and its frequency is very low.)

5. WOW AND FLUTTER CONFIRMATION

1) Playback the test record (3,000 Hz).
2) Confirm that the Wow and Flutter is within 0.025% (WRMS).
3) If not, re-adjust VR5, VR4 and VR6.

IX. CLASSIFICATION OF VARIOUS P.C BOARDS

1. P.C BOARD TITLES AND IDENTIFICATION NUMBERS

P.C Board Title	P.C Board Number	Remarks
Servo/Sys. Con P.C Board	P1018A501A	U
Servo/Sys. Con P.C Board	P1018A502A	J, C, A, E, V, S
Servo/Sys. Con P.C Board	P1018A503A	B
Fuse P.C Board	P1018A501B	U
Fuse P.C Board	P1018A502B	J, C, A, E, V, S
Fuse P.C Board	P1018A503B	B
Start/Cut P.C Board	P1018A501C	
Anti VR P.C Board	P1018A501D	
Quartz Ind P.C Board	P1018A501E	
Arm Position Sensor (LED) P.C Board	P1018A501F	
Arm Position Sensor (TR) P.C Board	P1018A501G	
Size Sensor P.C Board	P1018A501H	
Intermediate P.C Board	P1018A501I	

2. COMPOSITION OF VARIOUS P.C BOARDS

1) SERVO/SYS. CON. P.C BOARD P1018A501A (U), P1018A502A (J, C, A, E, V, S), P1018A503 (B)

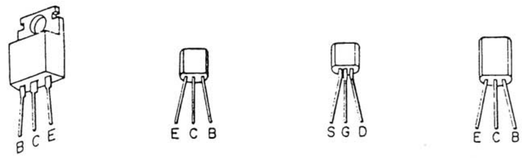

2SD313
2SD863

2SA1015
2SC1815

2SK30A

2SB764

TR1,2,7,21,23,29 ---------- 2SD863(E)(F)
TR3,4,5,10,11,12,13,19,26 to 31,42 --- 2SA1015(O)(Y)
TR6,14 to 18,20,25,32 to 34,36,37 --- 2SC1815(O)(Y)(GR)
TR8,22,24,40,41 ---------- 2SB764(E)(F)
TR9 ---------- 2SK30A(R)
TR35,38 ---------- 2SD313(E)(F)

LOCATION OF IC , TR & CONNECTOR

IC1,2	1B	TR1 to 6	1A	TR30 to 33	1A	J1	1C
IC3	2B	TR7,8	1B	TR34	1B	J2	1B
IC4	1C	TR9	1C	TR35 to 38	2C	J3 to 6	1A
IC5	2A	TR10 to 13	1A	TR39,40	1D	P1	1D
		TR14	1B	TR41	1C	P2	1A
		TR15 to 17	2C	TR42	1A		
		TR18,19	2B				
		TR20	2C				
		TR21 to 24	1C				
		TR27 to 29	2B				

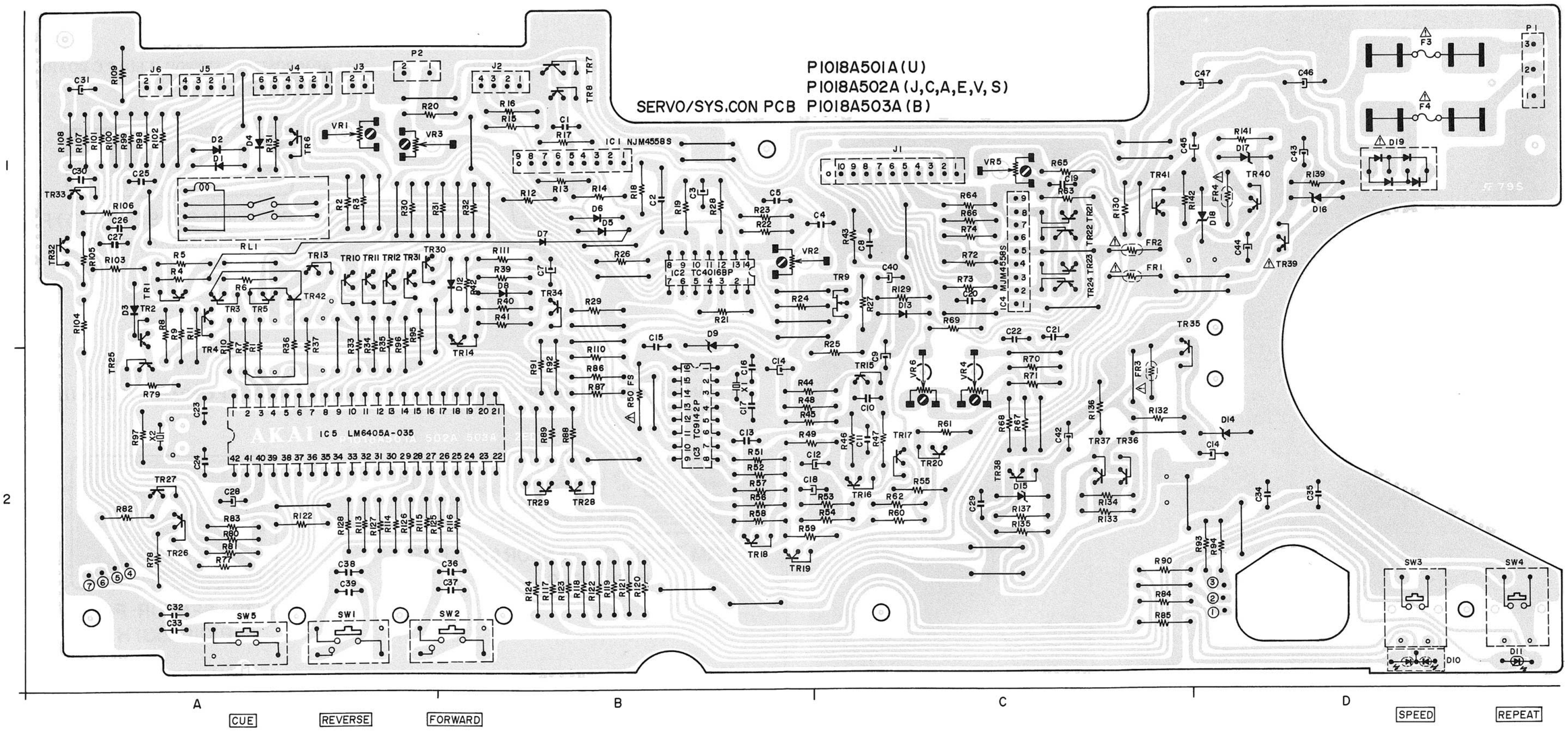

WARNING: ⚠INDICATES SAFETY CRITICAL COMPONENTS. FOR CONTINUED SAFETY, REPLACE SAFETY CRITICAL COMPONENTS ONLY WITH MANUFACTURER'S RECOMMENDED PARTS

AVERTISSEMENT: ⚠IL INDIQU LES COMPOSANTS CRITIQUES DE SÛRETÉ. POUR MAINTENIR LE DEGRE DE SECURITE DE L'APPAREIL NE REMPLACER LES CONPOSANTS DONT LE FONCTIONNEMENT EST CRITIQUE POUR LA SECURITE QUE PAR DES PIECES RECOMMANDEES PAR LE FABRICANT

2) FUSE P.C BOARD P1018A501B (U)

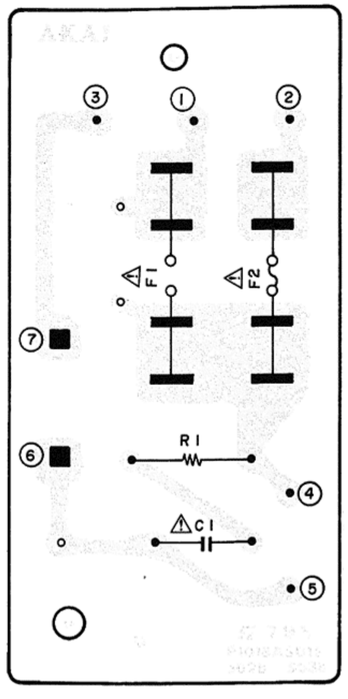

FUSE PCB P1018A501B (U)

3) FUSE P.C BOARD P1018A502B (J, C, A, E, V, S)

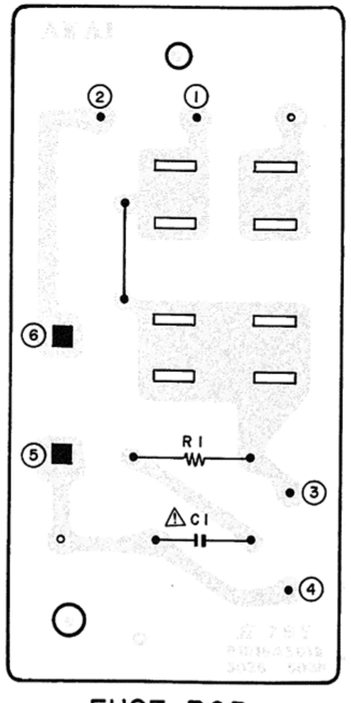

FUSE PCB
P1018A502A (J,C,A,E,V,S)

5) START/CUT P.C BOARD P1018A501C

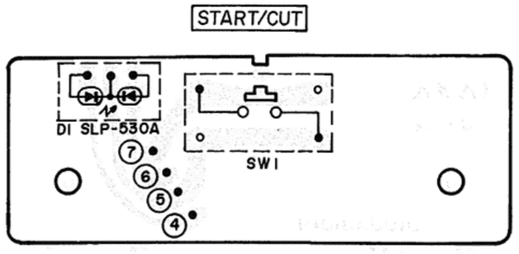

START/CUT PCB P1018A501C

6) ANTI VR P.C BOARD P1018A501D

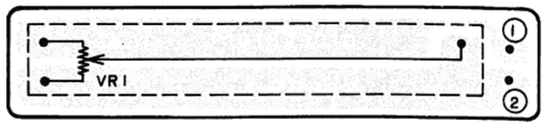

ANTI VR PCB P1018A501D

7) QUARTZ IND P.C BOARD P1018A501E

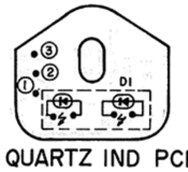

QUARTZ IND PCB
P1018A501E

8) ARM POSITION SENSOR (LED) P.C BOARD P1018A501F

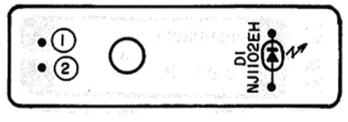

ARM POSITION SENSOR (LED) PCB
P1018A501F

4) FUSE P.C BOARD P1018A503B (B)

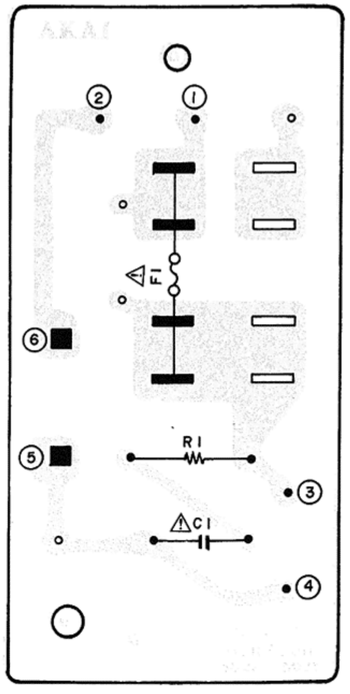

FUSE PCB P1018A503B(B)

9) ARM POSITION SENSOR (TR) P.C BOARD P1018A501G

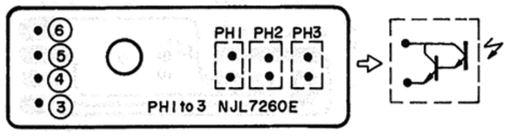

ARM POSITION SENSOR(TR) PCB
P1018A501G

10) SIZE SENSOR P.C BOARD P1018A501H

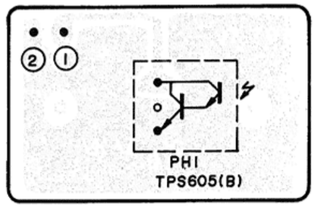

SIZE SENSOR PCB
P1018A501H

WARNING: ⚠INDICATES SAFETY CRITICAL COMPONENTS. FOR CONTINUED SAFETY, REPLACE SAFETY CRITICAL COMPONENTS ONLY WITH MANUFACTURER'S RECOMMENDED PARTS

AVERTISSEMENT: ⚠IL INDIQU LES COMPOSANTS CRITIQUES DE SÛRETÉ. POUR MAINTENIR LE DEGRE DE SECURITE DE L'APPAREIL NE REMPLACER LES CONPOSANTS DONT LE FONCTIONNEMENT EST CRITIQUE POUR LA SECURITE QUE PAR DES PIECES RECOMMANDEES PAR LE FABRICANT

11) INTERMEDIATE P.C BOARD P1018A501I

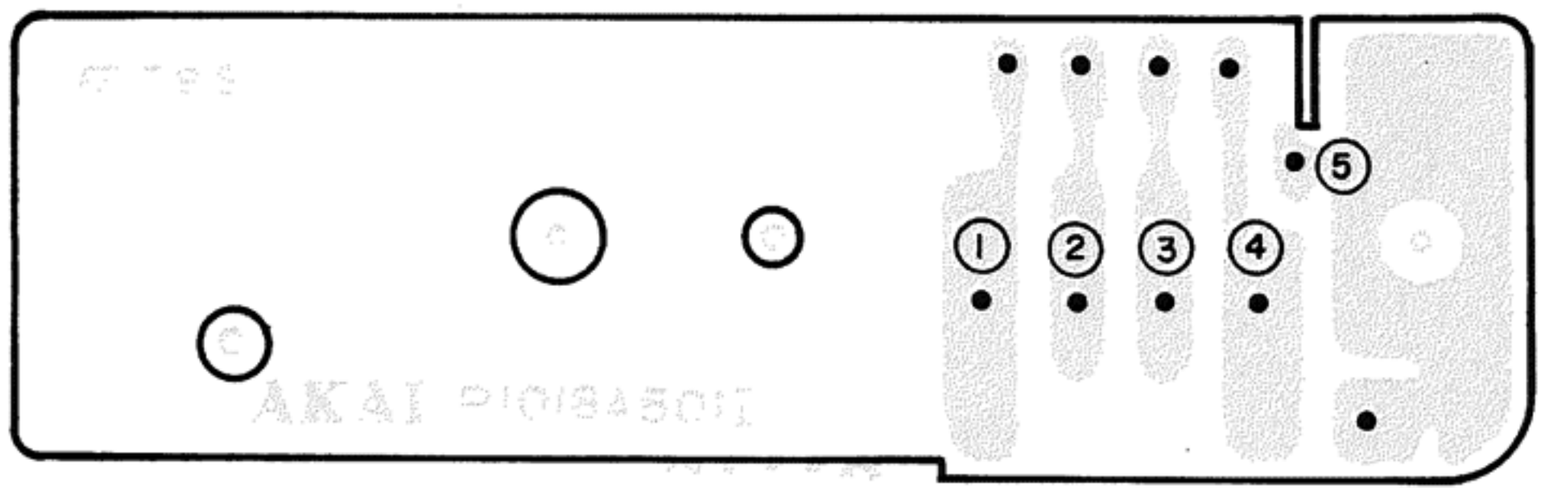

INTERMEDIATE PCB P1018A501 I

SECTION 2

PARTS LIST

TABLE OF CONTENTS

RECOMMENDED SPARE PARTS 33
1. SERVO SYSCON P.C BOARD BLOCK 33
2. ASSEMBLY BLOCK 34
3. FINAL ASSEMBLY BLOCK 36
INDEX 37

Resistor and Capacitor which is not listed in this parts list, please refer to COMMON LIST FOR SERVICE PARTS.

ATTENTION

1. When placing an order for parts, be sure to list the parts no. model no., and description. There are instances in which if any of this information is omitted, parts cannot be shipped or the wrong parts will be delivered.
2. Please be careful not to make a mistake in the parts no. If the parts no. is in error, a part different from the one ordered may be delivered.
3. Because parts number and parts unit supply in the Preliminary Parts List may be partially changed, please use this parts list for all future reference.

HOW TO USE THIS PARTS LIST

1. This Parts List shows the parts that are considered necessary for repairs. Other parts, such as resistors and capacitors, are shown in the "Common List for Service Parts". Select and order such parts from the "Common List for Service Parts".
2. The Recommended Spare Parts shows those parts in the Parts List which are considered particularly important for service.
3. Parts not shown in the Parts List and "Common List for Service Parts" will not be supplied in principle.
4. How to read list

a) Mechanism Block

2. HEAD BASE BLOCK

REF. NO.	PARTS NO.	DESCRIPTION
2-1x	BH-T2023A320A	HEAD BASE BLOCK GX-F66R
2-2	HP-H2206A010A	HEAD R/P PR4-8FU C
2-3	ZS-477876	PAN20x03STL CMT
2-4	ZS-536488	BID20x08STL CMT
2-5	ZG-402895	CS ANGLE ADJUST SPRING

SP (Service Parts) Classification

A small "x" indicates the inability to show that particular part in the Photo or Illustration.

This number corresponds with the individual parts index number in that figure

This number corresponds with the Figure Number

b) P.C Board Block

6. SYS. CON. P.C BOARD BLOCK

REF. NO.	PARTS NO.	DESCRIPTION
6-1	BA-T2034A070A	PC SYS CON BLK GX-F44R
6-IC1	EI-324536	IC HD14049BP
6-IC2	EI-336801	IC MB8841-564M
6-IC3	EI-331661	IC SN7405N
6-IC4	EI-336725	IC M54527P
6-TR1to4	ET-200985	TR 2SC2603 F,G
6-TR5to28	ET-554657	TR 2SA733A P,Q
6-D1	ED-318292	D SILICON H 1S2473T-77 T26
6-D2to4	ED-308952	D GERMA V 1K34A-LR F07
6-D5to10	ED-318292	D SILICON H 1S2473T-77 T26
6-X1	EI-318384	OSC X'TAL NC-18C 3.579545MHZ

SP (Service Parts) Classification

This reference numbers corresponds with symbol numbers of Schematic Diagrams.

5. Both the kind of part and installation position can be determined by the Parts Number. To determine where a parts number is listed, utilize Parts Index at end of Parts List. It is necessary first of all to find the Parts Number. This can be accomplished by using the Reference Number listed at right of parts number in the Parts Index.

WARNING

⚠ INDICATES SAFETY CRITICAL COMPONENTS. FOR CONTINUED SAFETY, REPLACE SAFETY CRITICAL COMPONENTS ONLY WITH MANUFACTURER'S RECOMMENDED PARTS.

AVERTISSEMENT

⚠ IL INDIQUE LES COMPOSANTS CRITIQUES DE SURETE. POUR MAINTENIR LE DEGRE DE SECURITE DE L'APPAREIL NE REMPLACER LES COMPOSANTS DONT LE FONCTIONNEMENT EST CRITIQUE POUR LA SECURITE QUE PAR DES PIECES RECOMMANDEES PAR LE FABRICANT.

RECOMMENDED SPARE PARTS

Because, if the parts listed below are on hand, almost any repair can be accomplished, we suggest that you stock these Recommended Spare Parts Items.

REF. NO.	PARTS NO.	DESCRIPTION
1	BM-P1018A020A	⚠ MAIN MOTOR BLK AP-Q41
2	BT-337422	⚠ TRANS POWER APT41-10 (J)
3	BT-337419	⚠ TRANS POWER APT41-30 (C,A)
4	BT-337420	⚠ TRANS POWER APT41-40 (E,V)
5	BT-337423	⚠ TRANS POWER APT41-50 (B,S)
6	BT-337418	⚠ TRANS POWER APT41-70 (U)
7	ED-337379	D LED NJL1102EH INFRARED
8	ED-337099	D LED SLP-136A RED
9	ED-336786	D LED SLP-271D GRN
10	ED-337323	D LED SLP-530A DOUBLE
11	ED-321115	D SILICON H 1S1588LB-5 F10
12	ED-306724	D SILICON S5277B 100/1.0A
13	ED-322238	D SILICON 1B4B41 100/1.0A
14	ED-338125	D ZENER H 05Z11 X
15	ED-303036	D ZENER H 05Z5.6 X
16	ED-323535	D ZENER H 05Z8.2 X
17	EF-300603	⚠ FUSE FST3100 T 250V 0.8A (B)
18	EF-300603	⚠ FUSE FST100 T 250V 0.8A (E,B,S,V)
19	EF-309389	⚠ FUSE TSC A 250V 0.40A (U)
20	EF-309388	⚠ FUSE TSC A 250V 0.80A (U,J)
21	EF-309391	⚠ FUSE TSC 125V 0.08A (C,A)
22	EI-337371	IC LM6405A-035
23	EI-201940	IC NJM4558S
24	EI-337324	IC TC4016BP
25	EI-331275	IC TC9142P
26	EI-337636	OSC X'TAL EYX-DP 11.0592MHZ
27	EL-337107	PL CORD 24.0V 50MA 500/500
28	EP-337103	⚠ SOLENOID 0947THT 21V
29	EP-328529	RELAY LEAD LAB2NS 2NO 12V
30	ER-308849	⚠ R CB H SNP FS RD 1/4W 221J
31	ER-319455	⚠ R FUSE ERD2FC 1/4W 10G0G
32	ES-325488	⚠ SW MICRO K1 UCE
33	ES-337427	⚠ SW MICRO SS-01-E UC
34	ES-331273	SW MECHA SUF12AT8 PUSH
35	ES-300122	SW TACT EVQ-QBR08K
36	ES-328414	SW TACT KHC10901
37	ET-336816	TR FET 2SK30A R
38	ET-337109	TR PHOTO TPS605B
39	ET-337378	TR PHOTO NJL7260E
40	ET-325501	TR 2SA1015 O,Y
41	ET-318237	TR 2SB764 E,F
42	ET-305221	TR 2SC1815 O,Y GR
43	ET-336941	TR 2SD313 E,F
44	ET-318239	TR 2SD863 E,F
45	EV-315416	R S-FIX H D8 3P 103
46	EV-315414	R S-FIX H D8 3P 203
47	EV-315752	R S-FIX H D8 3P 204
48	EV-321682	R S-FIX H D8 3P 501
49	EV-337321	VR SLIDE 30P1SV0B A501
50	EZ-328406	OSC CE CSB400A 0.4 MHZ
51	TP-P1018A030A	MAGNET BLK AP-Q41
52	TP-338098	TONE ARM W/SHELL ARM-41

1. SERVO SYSCON P.C BOARD BLOCK

REF. NO.	PARTS NO.	DESCRIPTION
1-1	BA-P1018A050A	PC SERVO SYSCON BLK AP-Q41(U)
1-2	BA-P1018A050B	PC SERVO SYSCON BLK AP-Q41(J)
1-3	BA-P1018A050C	PC SERVO SYSCON BLK AP-Q41(C)
1-4	BA-P1018A050D	PC SERVO SYSCON BLK AP-Q41(A)
1-5	BA-P1018A050E	PC SERVO SYSCON BLK AP-Q41(S) (S,V)
1-6	BA-P1018A050F	PC SERVO SYSCON BLK AP-Q41(B)
1-7	BA-P1018A050G	PC SERVO SYSCON BLK AP-Q41(E)

SERVO SYSCON P.C BOARD BLOCK

1-IC1	EI-201940	IC NJM4558S
1-IC2	EI-337324	IC TC4016BP
1-IC3	EI-331275	IC TC9142P
1-IC4	EI-201940	IC NJM4558S
1-IC5	EI-337371	IC LM6405A-035
1-TR1,2	ET-318239	TR 2SD863 E,F
1-TR3to5	ET-325501	TR 2SA1015 O,Y
1-TR6	ET-305221	TR 2SC1815 O,Y GR
1-TR7	ET-318239	⚠ TR 2SD863 E,F
1-TR8	ET-318237	⚠ TR 2SB764 E,F
1-TR9	ET-336816	TR FET 2SK30A R
1-TR10to13	ET-325501	TR 2SA1015 O,Y
1-TR14to18	ET-305221	TR 2SC1815 O,Y GR
1-TR19	ET-325501	TR 2SA1015 O,Y
1-TR20	ET-305221	TR 2SC1815 O,Y GR
1-TR21	ET-318239	⚠ TR 2SD863 E,F
1-TR22	ET-318237	⚠ TR 2SB764 E,F
1-TR23	ET-318239	⚠ TR 2SD863 E,F
1-TR24	ET-318237	⚠ TR 2SB764 E,F
1-TR25	ET-305221	TR 2SC1815 O,Y GR
1-TR26to31	ET-325501	TR 2SA1015 O,Y
1-TR32to34	ET-305221	TR 2SC1815 O,Y GR
1-TR35	ET-336941	⚠ TR 2SD313 E,F
1-TR36,37	ET-305221	TR 2SC1815 O,Y GR
1-TR38	ET-336941	TR 2SD313 E,F
1-TR39	ET-318239	⚠ TR 2SD863 E,F
1-TR40,41	ET-318237	⚠ TR 2SB764 E,F
1-R42	ET-325501	TR 2SA1015 O,Y
1-D1to3	ED-306724	D SILICON S5277B 100/1.0A
1-D4to8	ED-321115	D SILICON H 1S1588LB-5 F10
1-D9	ED-323535	D ZENER H 05Z8.2 X
1-D10	ED-337323	D LED SLP-530A DOUBLE
1-D11	ED-337099	D LED SLP-136A RED
1-D12	ED-321115	D SILICON H 1S1588LB-5 F10
1-D13	ED-306724	D SILICON S5277B 100/1.0A
1-D14,15	ED-303036	D ZENER H 05Z5.6 L
1-D16	ED-338125	D ZENER H 05Z11 X
1-D17	ED-303036	D ZENER H 05Z5.6 L
1-D18	ED-338125	D ZENER H 05Z11 X
1-D19	ED-322238	⚠ D SILICON 1B4B41 100/1.0A
1-SW1,2	ES-300122	SW TACT EVQ-QBR08K
1-SW3to5	ES-328414	SW TACT KHC10901
1-VR1	EV-321682	R S-FIX H D8 3P 501
1-VR2,3	EV-315416	R S-FIX H D8 3P 103
1-VR4	EV-315414	R S-FIX H D8 3P 203
1-VR5	EV-315752	R S-FIX H D8 3P 204
1-VR6	EV-315414	R S-FIX H D8 3P 203
1-X1	EI-337636	OSC X'TAL EYX-DP 11.0592MHZ
1-X2	EZ-328406	OSC CE CSB400A 0.4 MHZ
1-RL1	EP-328529	RELAY LEAD LAB2NS 2NO 12V
1-FR1to4	ER-319455	⚠ R FUSE ERD2FC 1/4W 10G0G
1-R50	ER-308849	⚠ R CB H SNP FS RD 1/4W 221J
1-C18	EC-313826	C SA V F05 R10K 25DC
1-F3,4	EF-309388	⚠ FUSE TSC A 250V 0.80A(U,J)
1-F3,4	EF-309391	⚠ FUSE TSC 125V 0.08A (C,A)
1-F3,4	EF-300603	⚠ FUSE FST3100 T 250V 0.8A (E,B,S,V)

REF. NO.	PARTS NO.	DESCRIPTION
	FUSE P.C BOARD BLOCK	
1-C1	EC-320548	⚠ C CE V F 103Z 250AC (U,J,C)
1-C1	EC-314688	⚠ C CE V FZ 103P 125AC (A)
1-C1	EC-338411	⚠ C CE V FZ 103P 400AC(B,S,V)
1-C1	EC-330308	⚠ C MMY V ECQUF 103M 250AC (E)
1-F1,2	EF-309389	⚠ FUSE TSC A 250V 0.40A (U)
1-F1	EF-300603	⚠ FUSE FST3100 T 250V 0.8A (B)
	START/CUT P.C BOARD BLOCK	
1-SW1	ES-328414	SW TACT KHC10901
1-D1	ED-337323	D LED SLP-530A DOUBLE
	ANTI VR P.C BOARD BLOCK	
1-VR1	EV-337321	VR SLIDE 30P1SV0B A501
	QUARTZ IND P.C BOARD BLOCK	
1-D1	ED-336786	D LED SLP-271D GRN
	ARM POSITION SENSOR (LED) P.C BOARD BLOCK	
1-D1	ED-337379	D LED NJL1102EH INFRARED
	ARM POSITION SENSOR (TR) P.C BOARD BLOCK	
1-PH1to3	ET-337378	TR PHOTO NJL7260E
	SIZE SENSOR P.C BOARD BLOCK	
1-PH1	ET-337109	TR PHOTO TPS605B

2. ASSEMBLY BLOCK

REF. NO.	PARTS NO.	DESCRIPTION
	MAIN MOTOR BLOCK	
2-1	BM-P1018A020A	⚠ MAIN MOTOR BLK AP-Q41
	MAGNET BLOCK	
2-2	TP-P1018A030A	MAGNET BLK AP-Q41
2-3	TP-336273	CAM ADJUST
2-4	ZW-342349	RING E 100 SPECIAL
2-5x	ZW-342350	RING E 030 SPECIAL
	POWER SW BLOCK	
2-6	ML-331716	LEVER POWER SW
2-7	ZS-302767	SHAFT SCREW
2-8	ES-325488	⚠ SW MICRO K1 UCE (SW901)
2-9	ZS-419670	PAN30x12STL CMT
2-10	ES-331273	SW MECHA SUF12AT8 PUSH
2-11	ZG-336265	SP TORSION POWER
	PLUNGER BLOCK	
2-12	EP-337103	⚠ SOLENOID 0947THT 21V (SL901)
2-13	ES-337427	⚠ SW MICRO SS-01-E UC (SW902)
2-14	TP-336269	ANGLE LIFTER
2-15	ZG-312997	SP T1-4.0/0.4-16.0 T1-111
2-16	ZG-313168	SP C-3.5/0.35-8.0 C-016
	HOLDER TRANS. BLOCK	
2-17	BT-337418	⚠ TRANS POWER APT41-70 (U)
2-18x	BT-337422	⚠ TRANS POWER APT41-10 (J)
2-19x	BT-337419	⚠ TRANS POWER APT41-30 (C,A)
2-20x	BT-337420	⚠ TRANS POWER APT41-40 (E,V)
2-21x	BT-337423	⚠ TRANS POWER APT41-50 (B,S)
2-22	SZ-302793	CUSHION RUBBER SBR
	PRISM BLOCK	
2-23	TP-P1018A090A	PRISM BLK AP-Q41
	ASSEMBLY BLOCK	
2-24	ZS-434160	6SET30x030SCM PKR HP
2-25	EO-338099	COIL UNIT
2-26	ZS-391476	6SET40x040SCM PKR HP
2-27	ZG-336270	SP PUSH ELEVATION
2-28	ZW-336280	PW 52x130x050STL
2-29	ZW-290283	RING U 285SUP CMT
2-30x	ZS-315590	T2CTS30x10STL CMT
2-31	ZS-336277	SPECIAL SCREW
2-32	TP-336261	HOLDER LAMP
2-33	EL-337107	PL CORD 24.0V 50MA 500/500
2-34	TP-336292A	HOLDER LAMP
2-35x	TP-336292B	HOLDER LAMP-P
2-36	TP-336281	INSULATOR
2-37	EW-306428	⚠ AC CORD 2 CORES KP-205A, VFF J (U)
2-38x	EW-305691	⚠ AC CORD 2 CORES KP-8, SPT-1 UC (C,A)
2-39x	EW-313882	⚠ AC CORD 2 CORES KP-419C, LTCE-2F E (E,V)
2-40x	EW-313884	⚠ AC CORD 2 CORES GTBS-2F 24/0.20x2 B (B)
2-41x	EW-306427	⚠ AC CORD 2 CORES KP-211, VFF J (J)
2-42x	EW-201515	⚠ AC CORD 2 CORES KP-560, LTSA-2F S (S)
2-43	EW-325492	CORD 2P AUDIO (EXCEPT A)
2-44x	EW-325489	CORD P-54-075 2P AUDIO (A)

When ordering parts, please quote Parts Number, Description and Model Number.

ASSEMBLY BLOCK

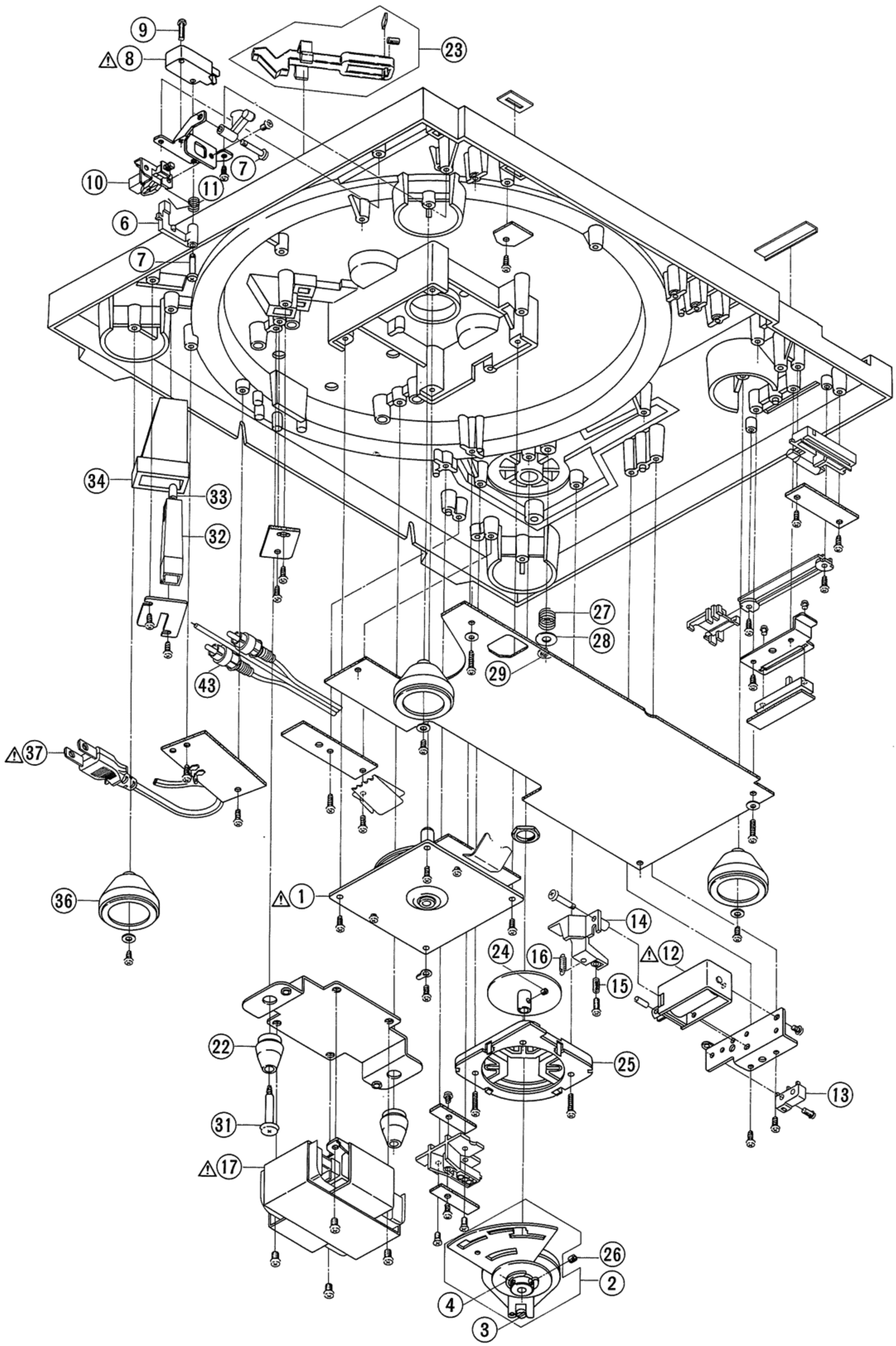

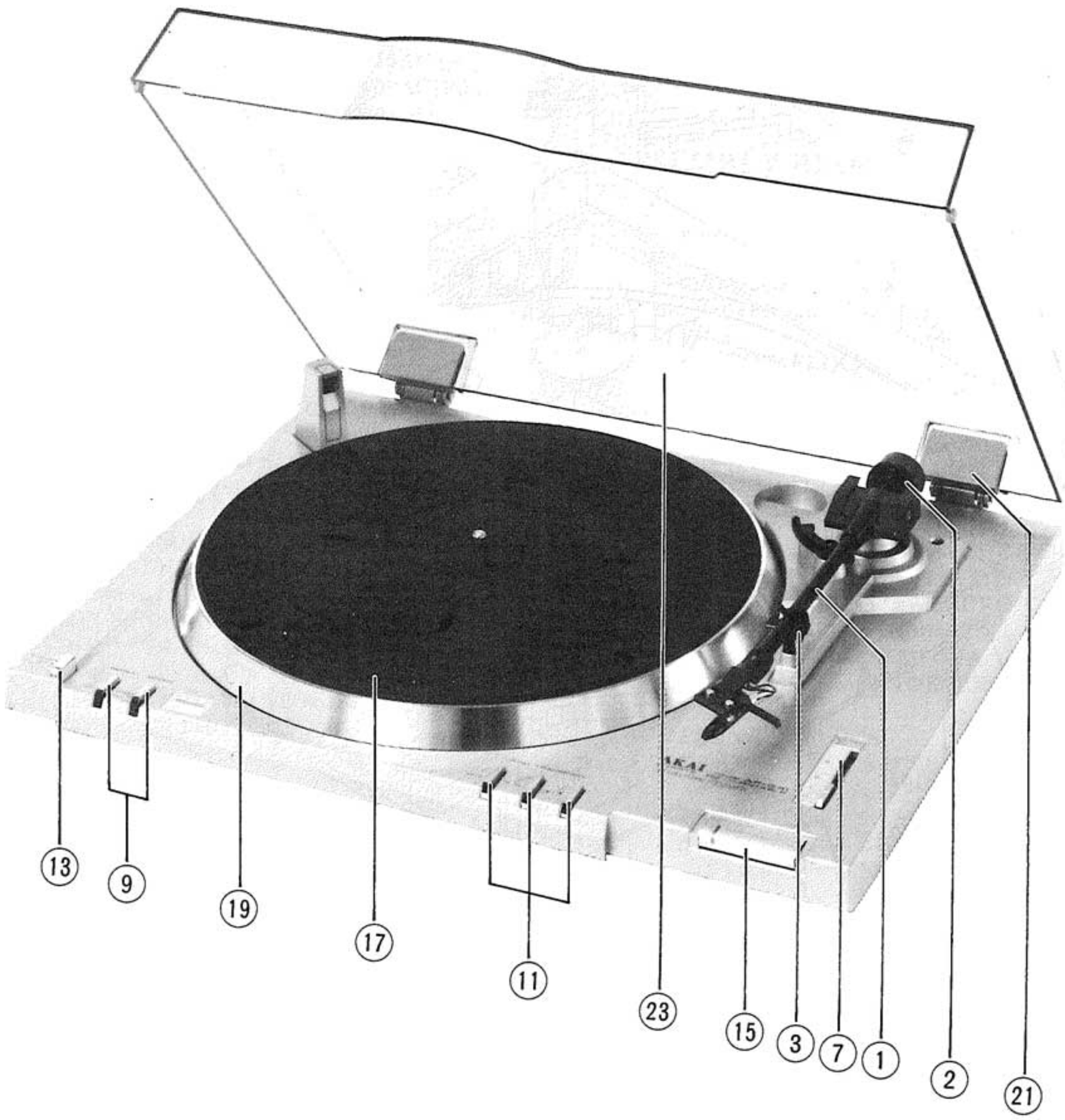

3. FINAL ASSEMBLY BLOCK

REF. NO.	PARTS NO.	DESCRIPTION
3-1	TP-338098	TONE ARM W/WHELL ARM-41
3-2	TP-780047	MAIN WEIGHT 13-47644
3-3	TP-B332571	CLAMPER ARM PART
3-4x	TP-332568	ARM ELEVATION
3-5x	ZG-332548	SP PUSH (A)
3-6x	ZS-336690	PAN20x10STL BNI
3-7	TP-B336282X1	SLIDE PLATE PART
3-8x	TP-B336282X2	SLIDE PLATE-P PART
3-9	SK-336297A	KNOB (A)
3-10x	SK-336297B	KNOB (A)-P
3-11	SK-336296A	KNOB (B)
3-12x	SK-336296B	KNOB (B)-P
3-13	SK-336293A	KNOB POWER
3-14x	SK-336293B	KNOB POWER-P
3-15	SK-336295A	KNOB START LEVER
3-16x	SK-336295B	KNOB START LEVER-P
3-17	TP-336257A	TABLE SHEET (A) (EXCEPT A)
3-18x	TP-336257B	TABLE SHEET (B) (A)
3-19	TP-336258	PLATTER
3-20x	SP-336290	COVER BOTTOM
3-21	TP-336361	AUTO HINGE OH-5
3-22x	TP-336362	AUTO HINGE OH-5-BL
3-23	BC-B336291	DUST COVER PART

INDEX

PARTS NO.	REF. NO.	PARTS NO.	REF. NO.	PARTS NO.	REF. NO.	PARTS NO.	REF. NO.
BA-P1018A050A	1-1	ET-337109	1-PH1				
BA-P1018A050B	1-2	ET-337378	1-PH1to3				
BA-P1018A050C	1-3	EV-315414	1-VR6				
BA-P1018A050D	1-4	EV-315414	1-VR4				
BA-P1018A050E	1-5	EV-315416	1-VR2,3				
BA-P1018A050F	1-6	EV-315752	1-VR5				
BA-P1018A050G	1-7	EV-321682	1-VR1				
BC-B336291	3-23	EV-337321	1-VR1				
BM-P1018A020A	2-1	EW-201515	2-42x				
BT-337418	2-17	EW-305691	2-38x				
BT-337419	2-19x	EW-306427	2-41x				
BT-337420	2-20x	EW-306428	2-37				
BT-337422	2-18x	EW-313882	2-39x				
BT-337423	2-21x	EW-313884	2-40x				
EC-313826	1-C18	EW-325489	2-44x				
EC-314688	1-C1	EW-325492	2-43				
EC-320548	1-C1	EZ-328406	1-X2				
EC-330308	1-C1	ML-331716	2-6				
EC-338411	1-C1	SK-336293A	3-13				
ED-303036	1-D17	SK-336293B	3-14x				
ED-303036	1-D14,15	SK-336295A	3-15				
ED-306724	1-D13	SK-336295B	3-16x				
ED-306724	1-D1to3	SK-336296A	3-11				
ED-321115	1-D4to8	SK-336296B	3-12x				
ED-321115	1-D12	SK-336297	3-9				
ED-322238	1-D19	SK-336297B	3-10x				
ED-323535	1-D9	SP-336290	3-20x				
ED-336786	1-D1	SZ-302793	2-22				
ED-337099	1-D11	TP-B332571	3-3				
ED-337323	1-D1	TP-B336282X1	3-7				
ED-337323	1-D10	TP-B336282X2	3-8x				
ED-337379	1-D1	TP-P1018A030A	2-2				
ED-338125	1-D16	TP-P1018A090A	2-23				
ED-338125	1-D18	TP-332568	3-4x				
EF-300603	1-F1	TP-336257A	3-17				
EF-300603	1-F3,4	TP-336257B	3-18x				
EF-309388	1-F3,4	TP-336258	3-19				
EF-309389	1-F1,2	TP-336261	2-32				
EF-309391	1-F3,4	TP-336269	2-14				
EI-201940	1-IC4	TP-336273	2-3				
EI-201940	1-IC1	TP-336281	2-36				
EI-331275	1-IC3	TP-336292A	2-34				
EI-337324	1-IC2	TP-336292B	2-35x				
EI-337371	1-IC5	TP-336361	3-21				
EI-337636	1-X1	TP-336362	3-22x				
EL-337107	2-33	TP-338098	3-1				
EO-338099	2-25	TP-780047	3-2				
EP-328529	1-RL1	ZG-312997	2-15				
EP-337103	2-12	ZG-313168	2-16				
ER-308849	1-R50	ZG-332548	3-5x				
ER-319455	1-FR1to4	ZG-336265	2-11				
ES-300122	1-SW1,2	ZG-336270	2-27				
ES-325488	2-8	ZS-302767	2-7				
ES-328414	1-SW3to5	ZS-315590	2-30x				
ES-328414	1-SW1	ZS-336277	2-31				
ES-331273	2-10	ZS-336690	3-6x				
ES-337427	2-13	ZS-391476	2-26				
ET-305221	1-TR14to18	ZS-419670	2-9				
ET-305221	1-TR36,37	ZS-434160	2-24				
ET-305221	1-TR6	ZW-290283	2-29				
ET-305221	1-TR20	ZW-336280	2-28				
ET-305221	1-TR32to34	ZW-342349	2-4				
ET-305221	1-TR25	ZW-342350	2-5x				
ET-318237	1-TR24						
ET-318237	1-TR40,41						
ET-318237	1-TR8						
ET-318237	1-TR22						
ET-318239	1-TR23						
ET-318239	1-TR21						
ET-318239	1-TR1,2						
ET-318239	1-TR7						
ET-318239	1-TR39						
ET-325501	1-TR42						
ET-325501	1-TR19						
ET-325501	1-TR3to5						
ET-325501	1-TR10to13						
ET-325501	1-TR26to31						
ET-336816	1-TR9						
ET-336941	1-TR38						
ET-336941	1-TR35						

SECTION 3

SCHEMATIC DIAGRAM

1. SCHEMATIC DIAGRAM OF ICs
2. AP-Q41/C NO. 1640814A SCHEMATIC DIAGRAM

NJM4558S

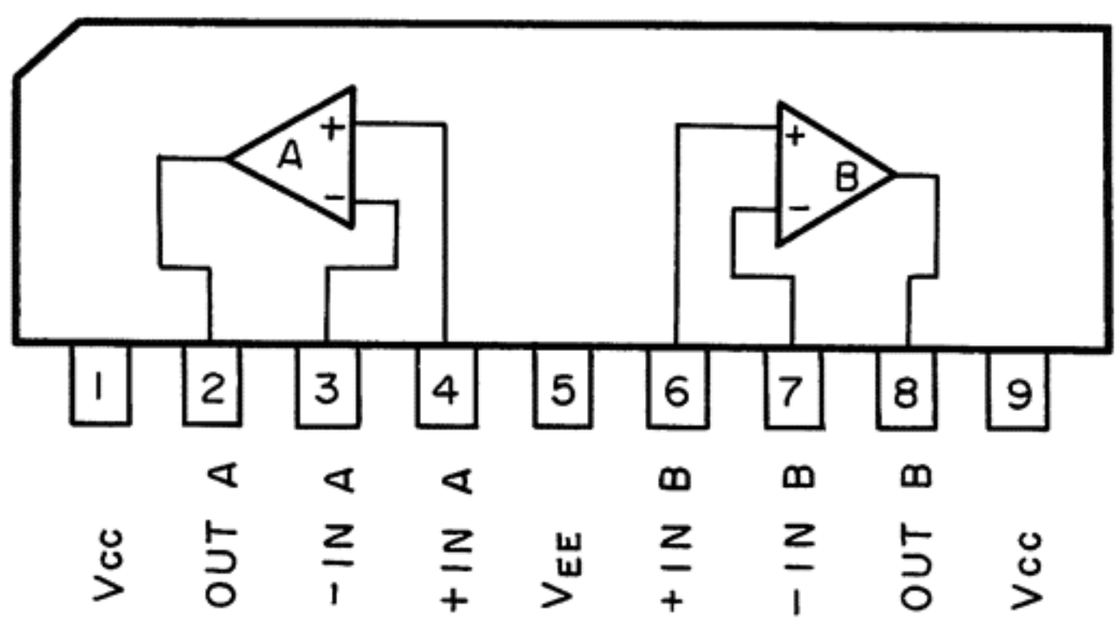

TC9142P

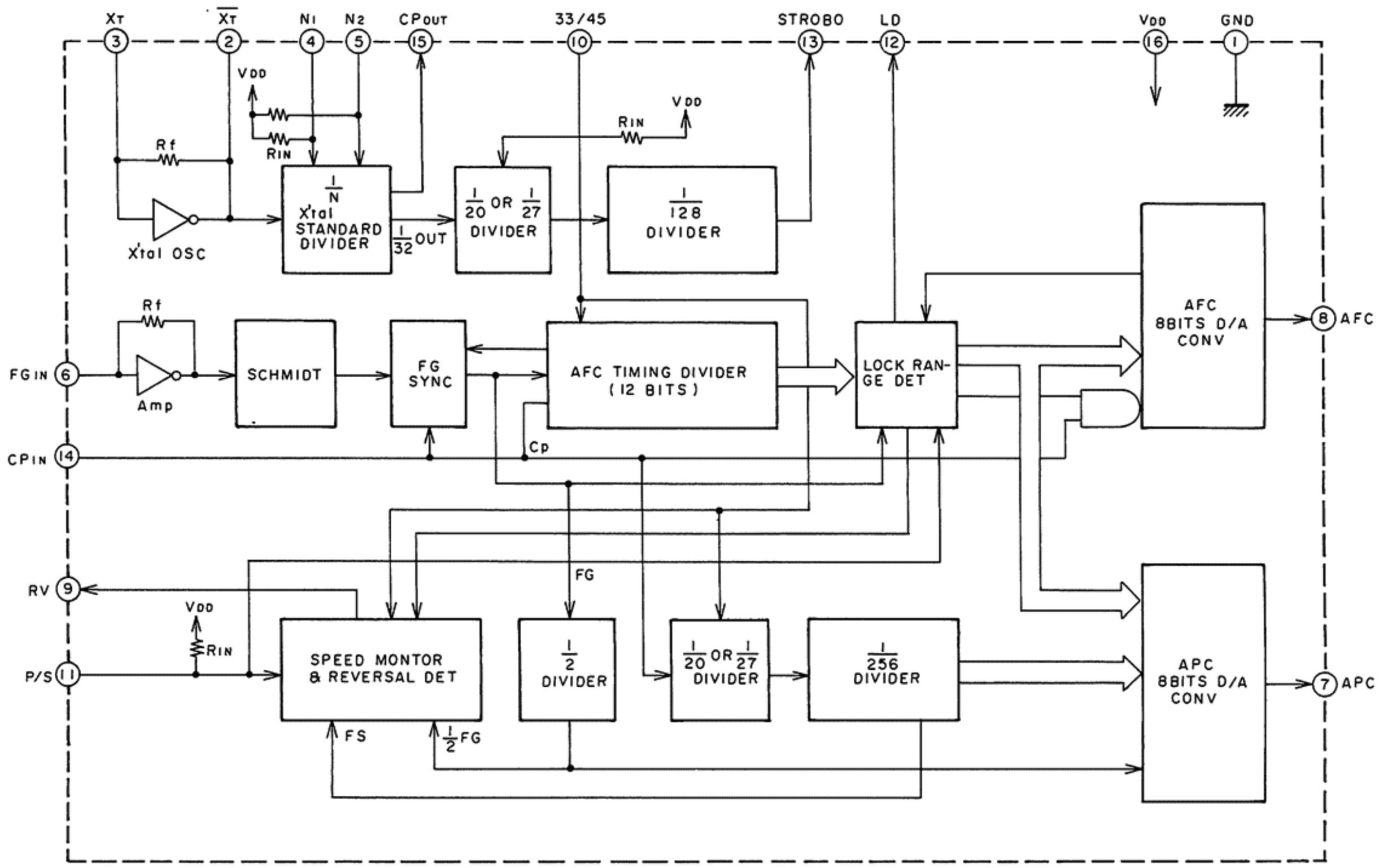

AP-Q41/C

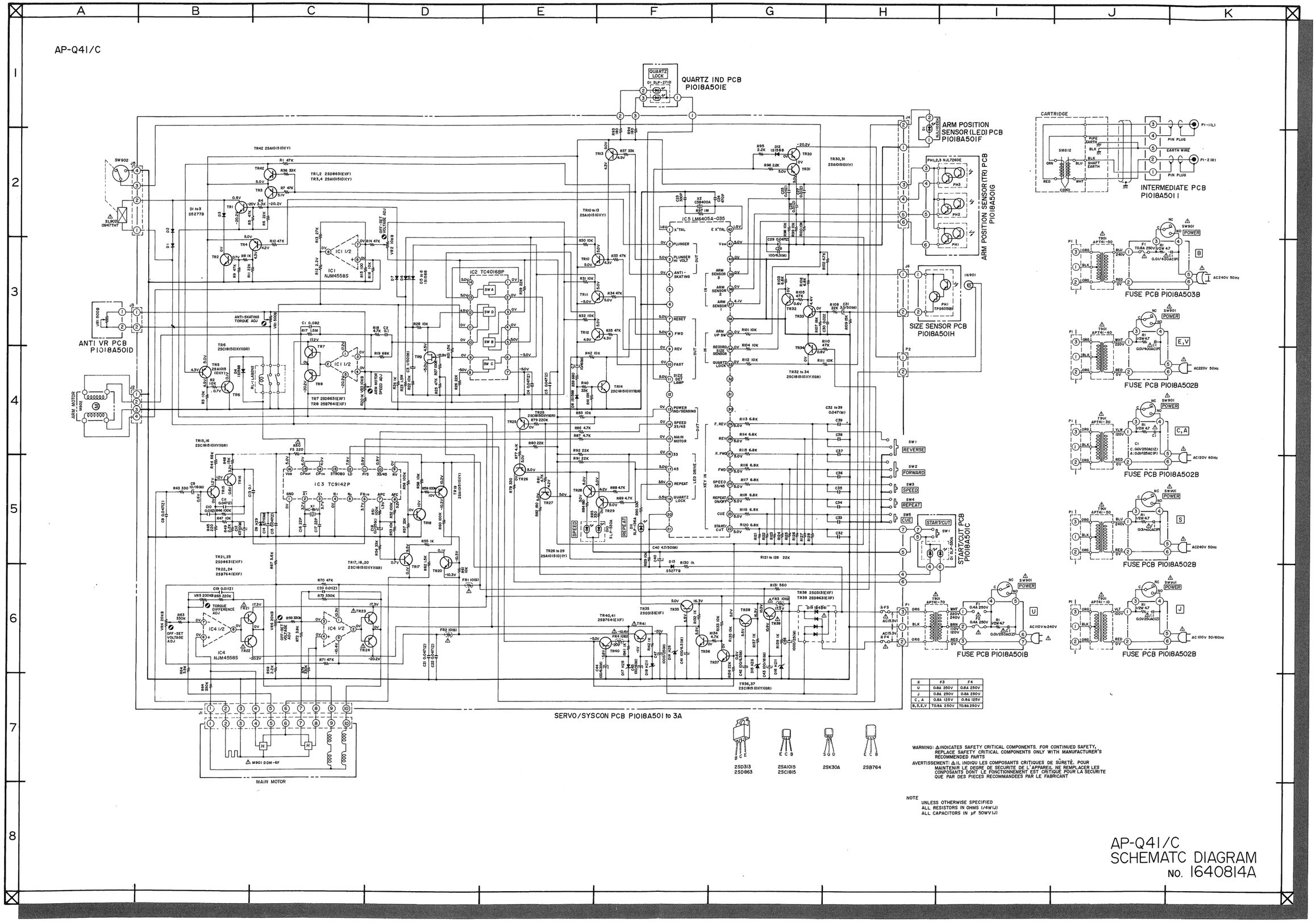

※	F3	F4
U	0.8A 250V	0.8A 250V
J	0.8A 250V	0.8A 250V
C, A	0.8A 125V	0.8A 125V
B, S, E, V	T0.8A 250V	T0.8A 250V

WARNING: ⚠INDICATES SAFETY CRITICAL COMPONENTS. FOR CONTINUED SAFETY, REPLACE SAFETY CRITICAL COMPONENTS ONLY WITH MANUFACTURER'S RECOMMENDED PARTS

AVERTISSEMENT: ⚠ IL INDIQU LES COMPOSANTS CRITIQUES DE SÛRETÈ. POUR MAINTENIR LE DEGRE DE SECURITE DE L'APPAREIL NE REMPLACER LES COMPOSANTS DONT LE FONCTIONNEMENT EST CRITIQUE POUR LA SECURITE QUE PAR DES PIECES RECOMMANDEES PAR LE FABRICANT

NOTE
UNLESS OTHERWISE SPECIFIED
ALL RESISTORS IN OHMS 1/4W(J)
ALL CAPACITORS IN μF 50WV(J)

AP-Q41/C
SCHEMATC DIAGRAM
NO. 1640814A

AKAI ELECTRIC CO., LTD.
12-14, 2-Chome, Higashi-Kojiya, Ohta-Ku, Tokyo, Japan
TEL: Tokyo (742) 5111 CABLE: HIFIAKAI TOKYO TELEX: J26261
Printed No. 1640812-4816I1 Printed Date: April 23, 1982
Printed in Japan