AKAI SERVICE MANUAL

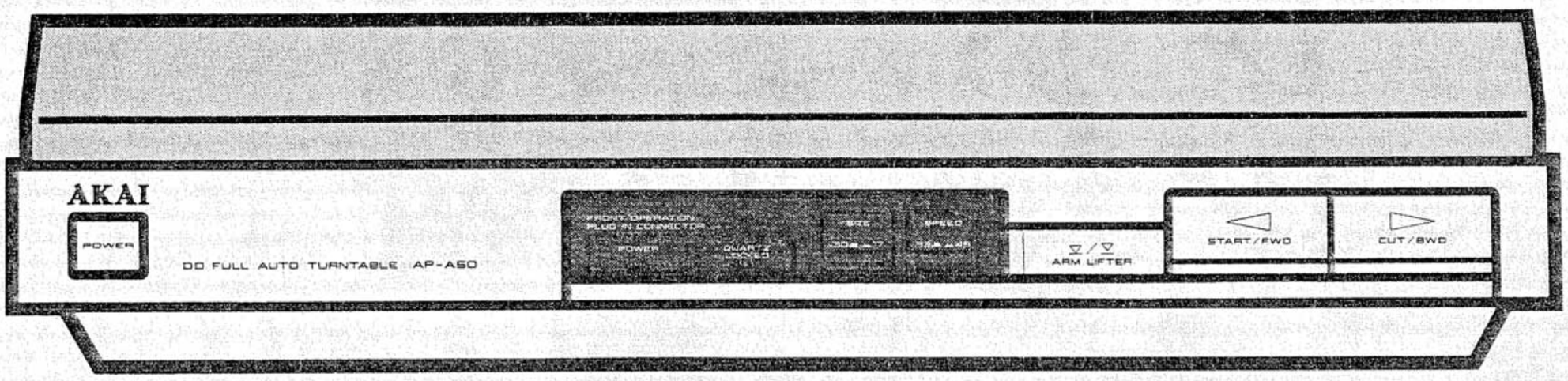

DD FULL AUTOMATIC TURNTABLE

MODEL AP-A50/C

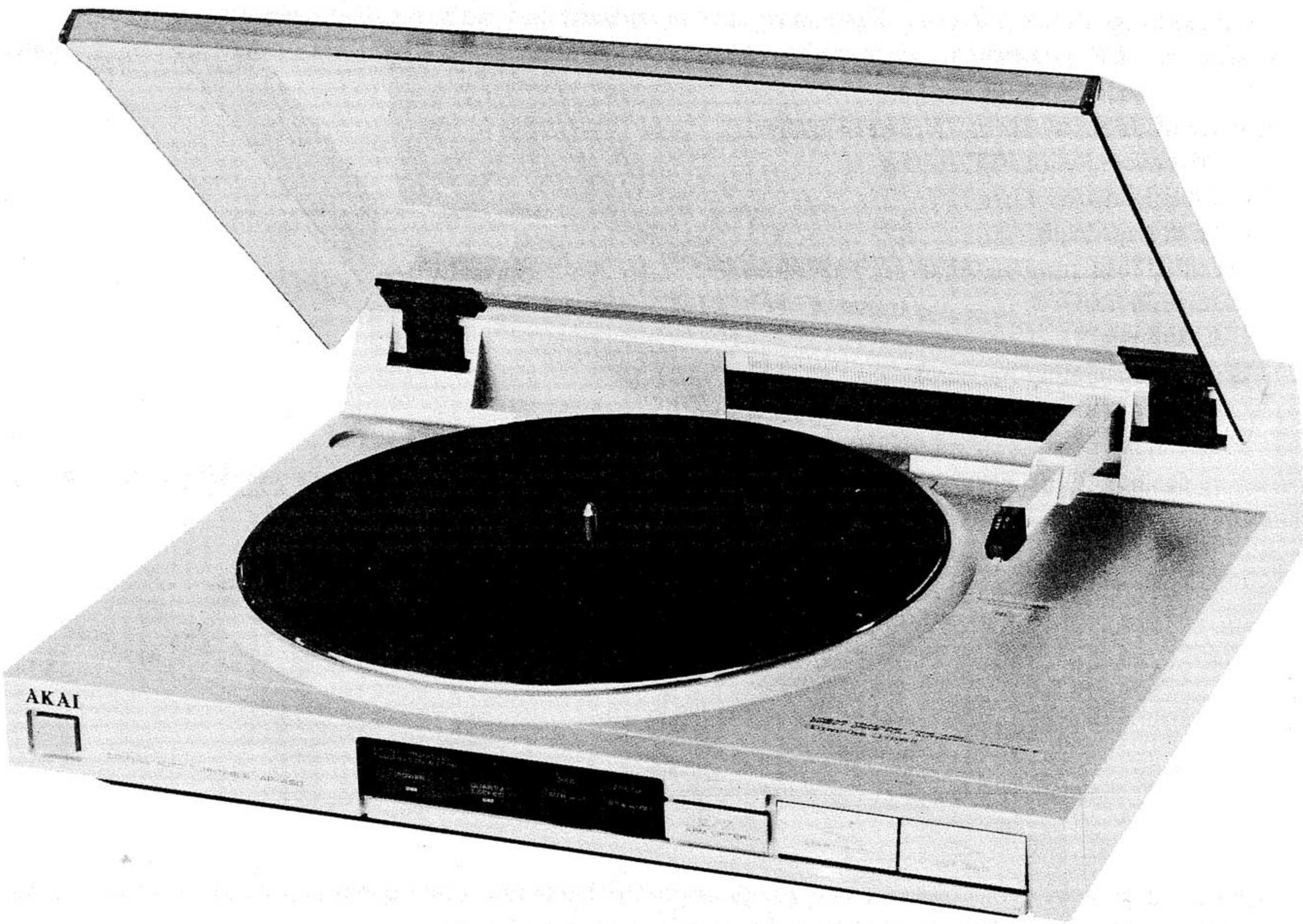

DD FULL AUTOMATIC TURNTABLE

MODEL AP-A50/C

SECTION 1 SERVICE MANUAL 3
SECTION 2 PARTS LIST 9

SAFETY INSTRUCTIONS

SAFETY CHECK AFTER SERVICING

Confirm the specified insulation resistance between power cord plug prongs and externally exposed parts of the set is greater than 10 Mohms, but for equipment with external antenna terminals (tuner, receiver, etc.) and is intended for [C] or [A], specified insulation resistance should be more than 2.2 Mohms (ground terminals, microphone jacks, headphone jacks. line-in-out jacks etc.)

PRECAUTIONS DURING SERVICING

1. Parts identified by the ⚠ symbol parts are critical for safety.
   Replace only with parts number specified.
2. In addition to safety, other parts and assemblies are specified for conformance with such regulations as those applying to spurious radiation. These must also be replaced only with specified replacements.
   Examples: RF converters, tuner units, antenna selector switches, RF cables, noise blocking capacitors, noise blocking filters, etc.
3. Use specified internal wiring. Note especially:
   1) Wires covered with PVC tubing
   2) Double insulated wires
   3) High voltage leads
4. Use specified insulating materials for hazardous live parts. Note especially:
   1) Insulation Tape
   2) PVC tubing
   3) Spacers (Insulating Barriers)
   4) Insulation sheets for transistors
   5) Plastic screws for fixing microswitch (especially in turntable)
5. When replacing AC primary side components (transformers, power cords, noise blocking capacitors, etc.), wrap ends of wires securely about the terminals before soldering.

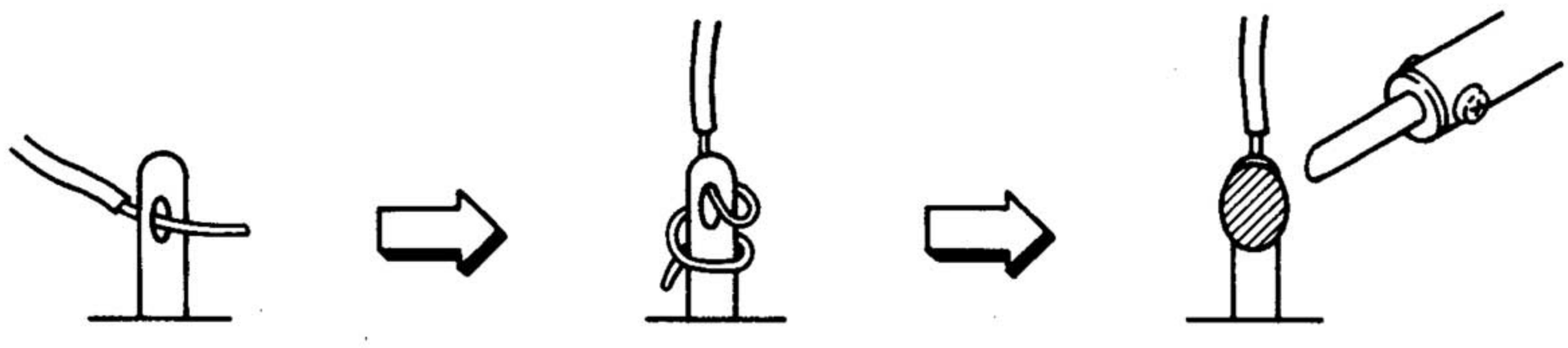

6. Observe that wires do not contact heat producing parts (heatsinks, oxide metal film resistors, fusible resistors, etc.).
7. Check that replaced wires do not contact sharp edged or pointed parts.
8. Also check areas surrounding repaired locations.
9. Use care that foreign objects (screws, solder droplets, etc.) do not remain inside the set.

VOLTAGE CONVERSION

Each machine is preset at the factory according to its destination, but some machines can be set to 110V–120V or 220V–240V as required. If your machine's voltage can be converted:
Before connecting the power cord or assembling the platter, move the Voltage Selector located on the bottom of the AP-A50, with a screwdriver so that the correct voltage is indicated. Models for USA, Canada, Europe, UK and Australia are not equipped with this facility.

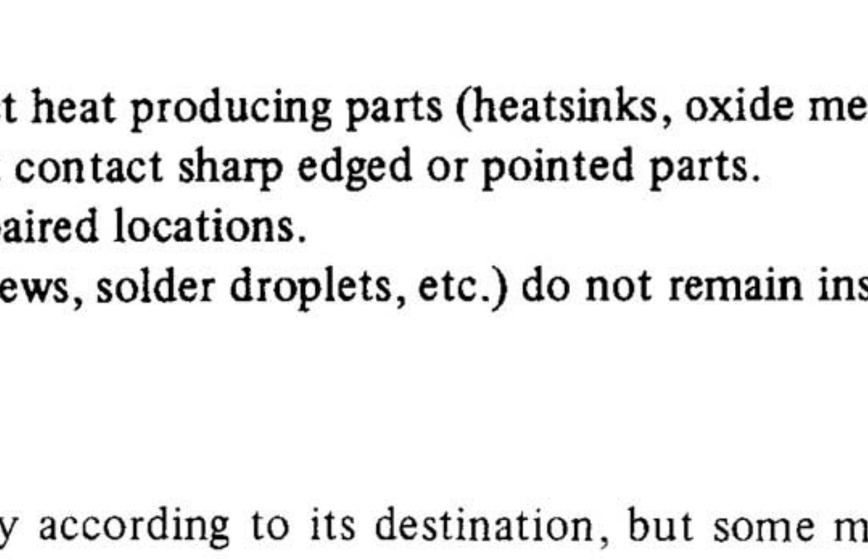

SECTION 1

SERVICE MANUAL

TABLE OF CONTENTS

I. SPECIFICATIONS 4
II. DISMANTLING OF UNIT 4
III. CONTROLS 5
IV. PRINCIPAL PARTS LOCATION 6
V. HOW TO CHANGE OR INSTALL THE CARTRIDGE 6
VI. ADJUSTMENTS 7
6-1 STYLUS HEIGHT ADJUSTMENT AT ARM UP POSITION 7
6-2 LEAD-IN POSITION ADJUSTMENT 7
6-3 TRACKING SENSOR ADJUSTMENTS 7

For basic adjustments, measuring methods, and operating principles, refer to GENERAL TECHNICAL MANUAL.

I. SPECIFICATIONS

TURNTABLE (PLATTER)	Aluminium alloy diecast
DRIVE SYSTEM	Direct drive
MOTOR	DC servo motor
SPEED	33-1/3 & 45 rpm
WOW AND FLUTTER	0.045% WRMS
RUMBLE	70 dB (DIN-B)
TONE ARM	Static balanced type, linear tracking
EFFECTIVE ARM LENGTH	165 mm
APPLICABLE CARTRIDGE	[14P] Plug-in type
CARTRIDGE	VM type (PC-35), included with the AP-A50C only
OUTPUT VOLTAGE	2.5 mV
CHANNEL SEPARATION	More than 20 dB
OPTIMAL STYLUS PRESSURE	1.25 g
POWER REQUIREMENTS	120V, 60 Hz for USA and Canada 220V, 50 Hz for European countries (except UK) 240V, 50 Hz for UK and Australia 110V–120V/220V–240V, 50 Hz/60 Hz convertible for other countries
DIMENSIONS	440 (W) x 106 (H) x 395 (D) mm (17.3 x 4.2 x 15.6 inches)
WEIGHT	5.8 kg (12.8 lbs)

* For improvement purposes, specifications and design are subject to change without notice.

II. DISMANTLING OF UNIT

In case of trouble, etc. necessitating dismantling, please dismantle in the order shown in the photographs. Reassemble in reverse order.

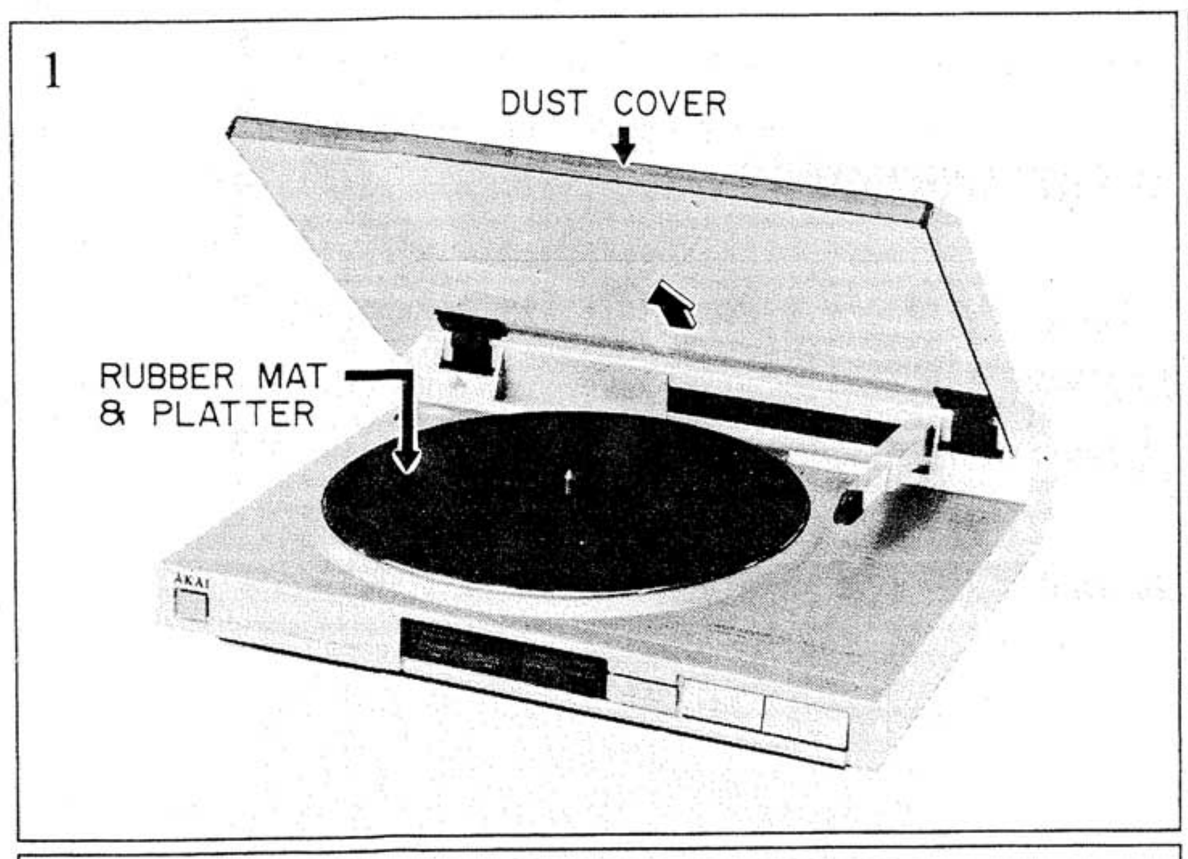

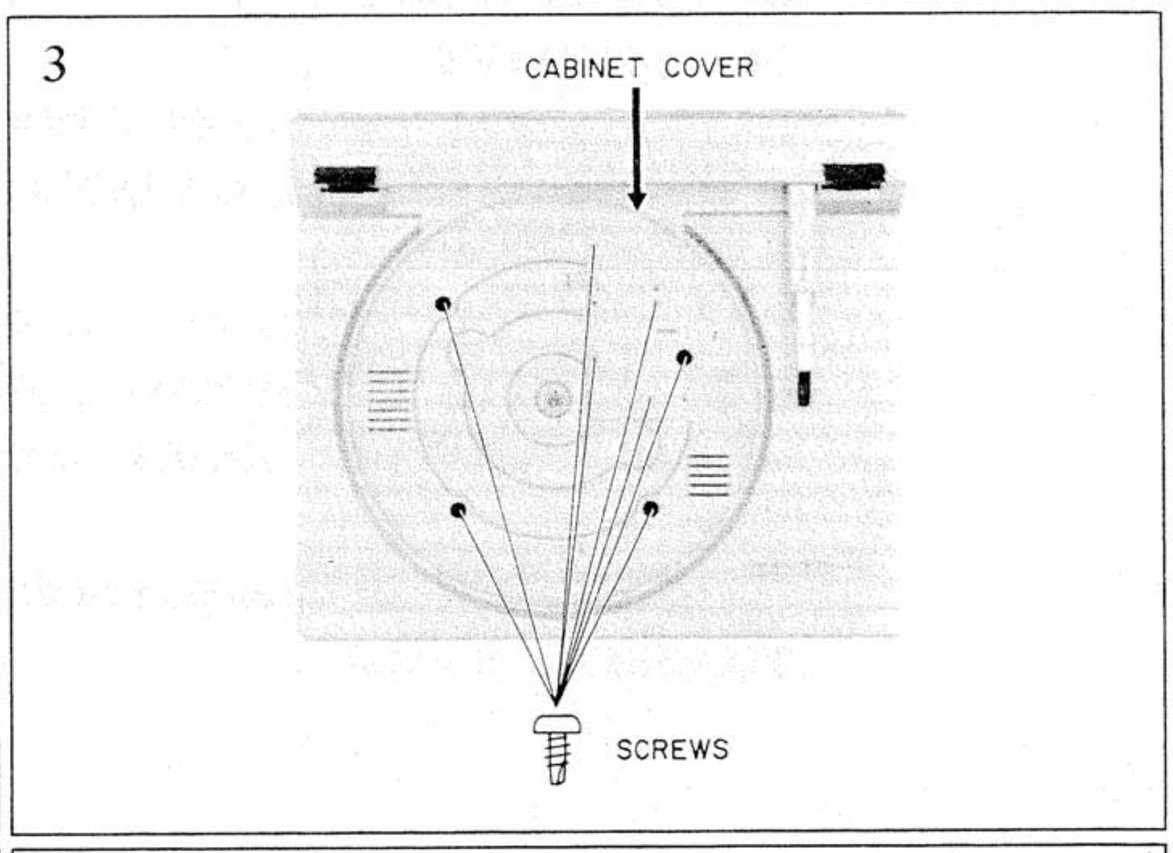

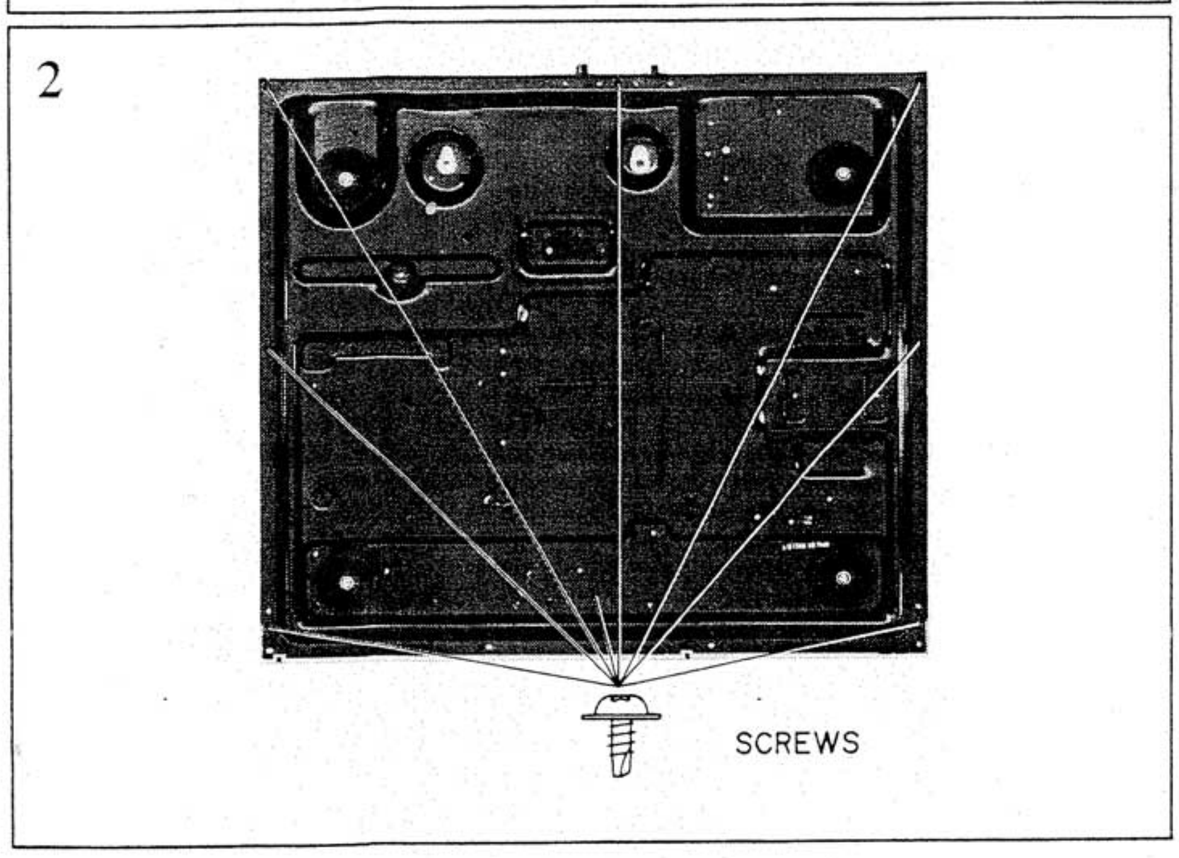

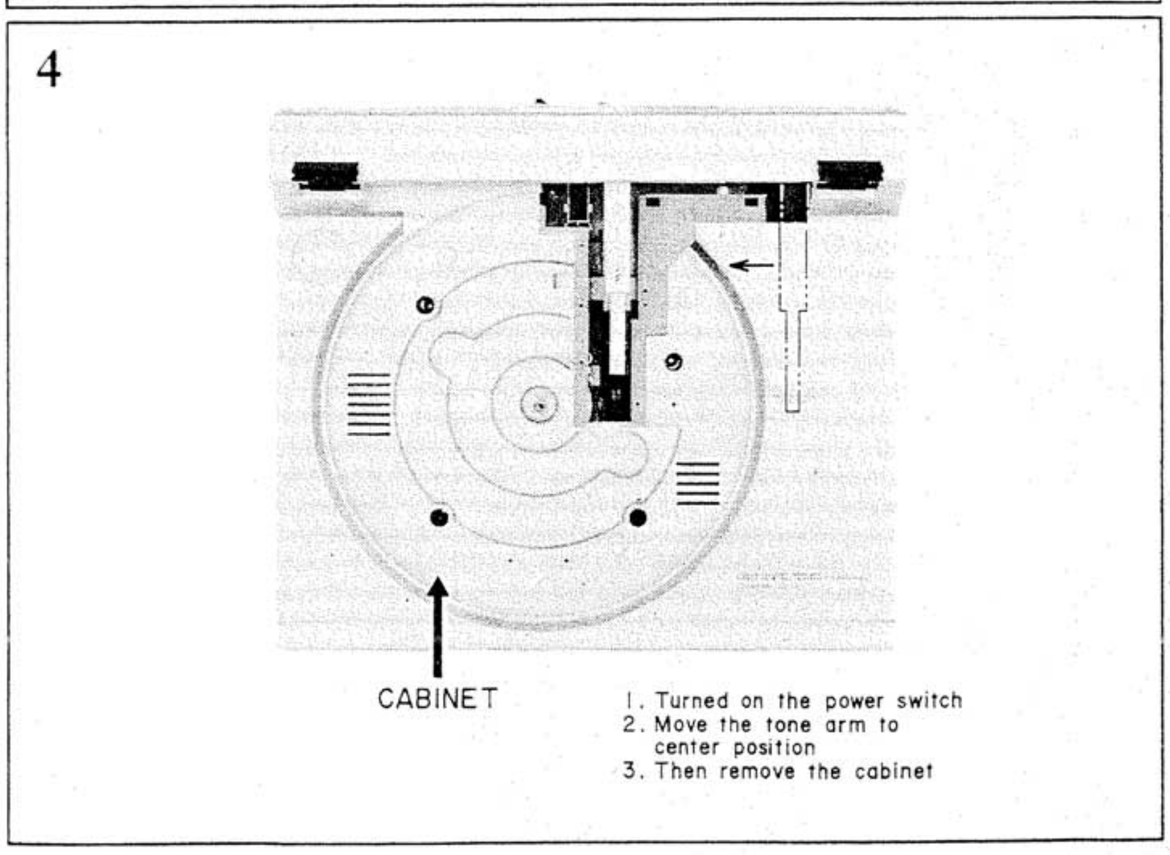

III. CONTROLS

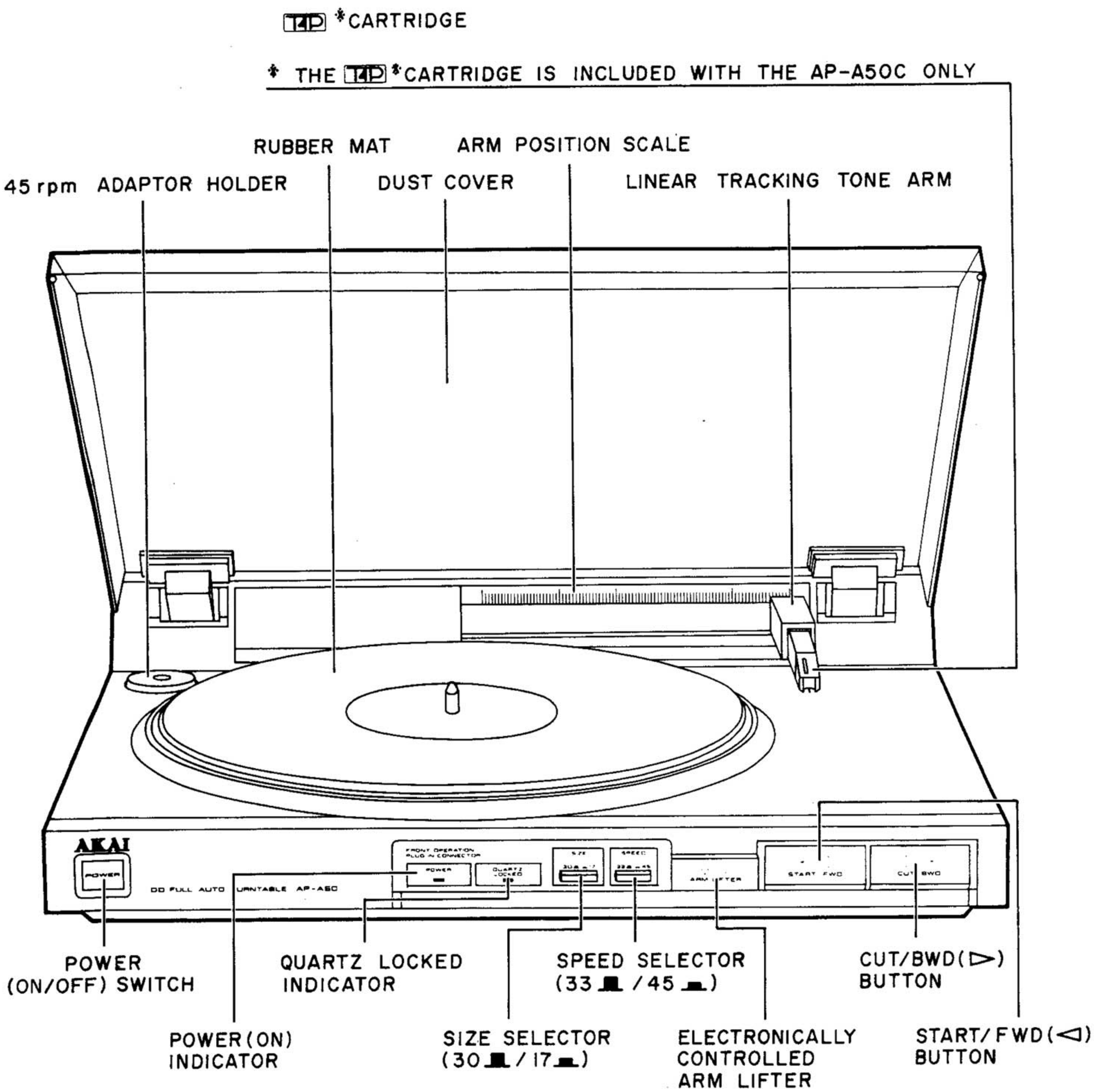

Fig. 3-1

IV. PRINCIPAL PARTS LOCATION

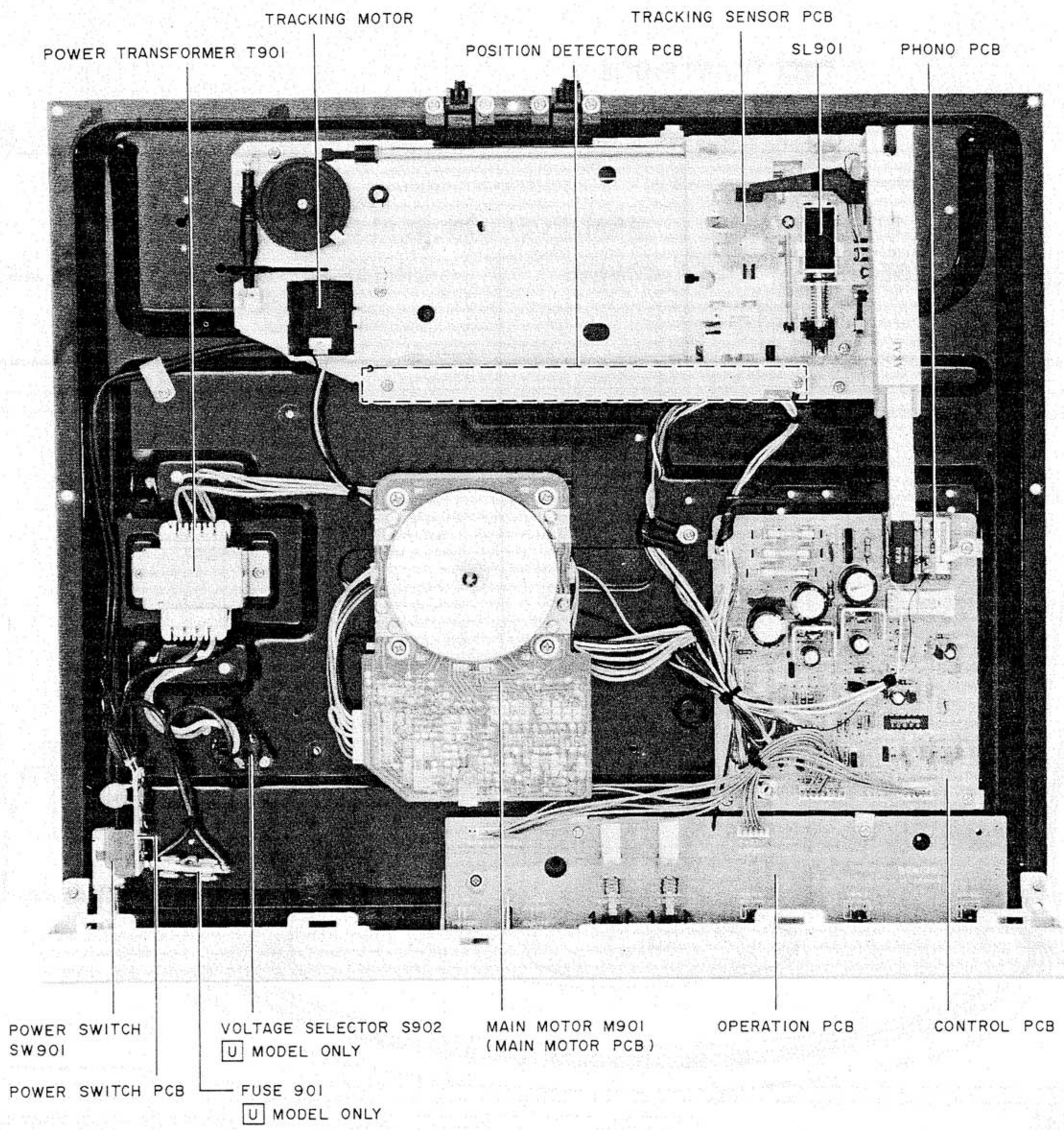

Fig. 4-1

V. HOW TO CHANGE OR INSTALL THE CARTRIDGE

With the tone arm on the tone arm rest and clamped, remove the screw on the side of the tone arm (directly behind the cartridge) by using a screwdriver. After removing the screw, grasp the cartridge firmly and pull it forward, away from the tone arm, until it is free. Replace the new cartridge by reversing the above operation.

In order to enjoy the full capability of the Akai AP-A50 please note the following when changing the cartridge.

- You may want to replace the cartridge once per year to maintain a high level of performance or to upgrade your turntable.
- T4P * is the standard mark for plug-in cartridges. Cartridges with this mark are interchangeable. The Akai AP-A50C is equipped with a high quality VM moving magnet cartridge, but any cartridge with the T4P * mark can be used.
  Replace the cartridge with one which has an output voltage of approximately 2.5 mV.
  [MV (moving coil) cartridges can also be used if combined with a transformer or MC head amplifier]

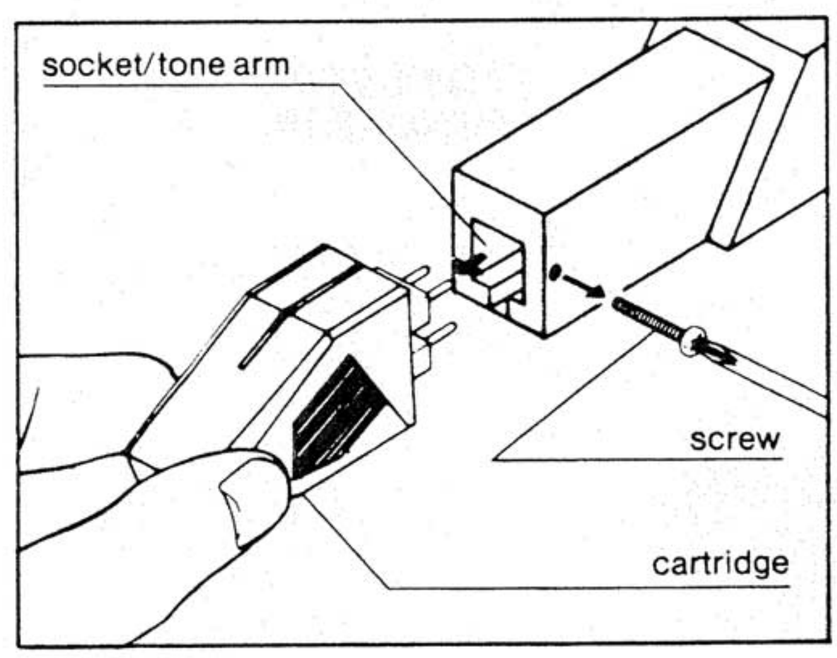

Fig. 5-1

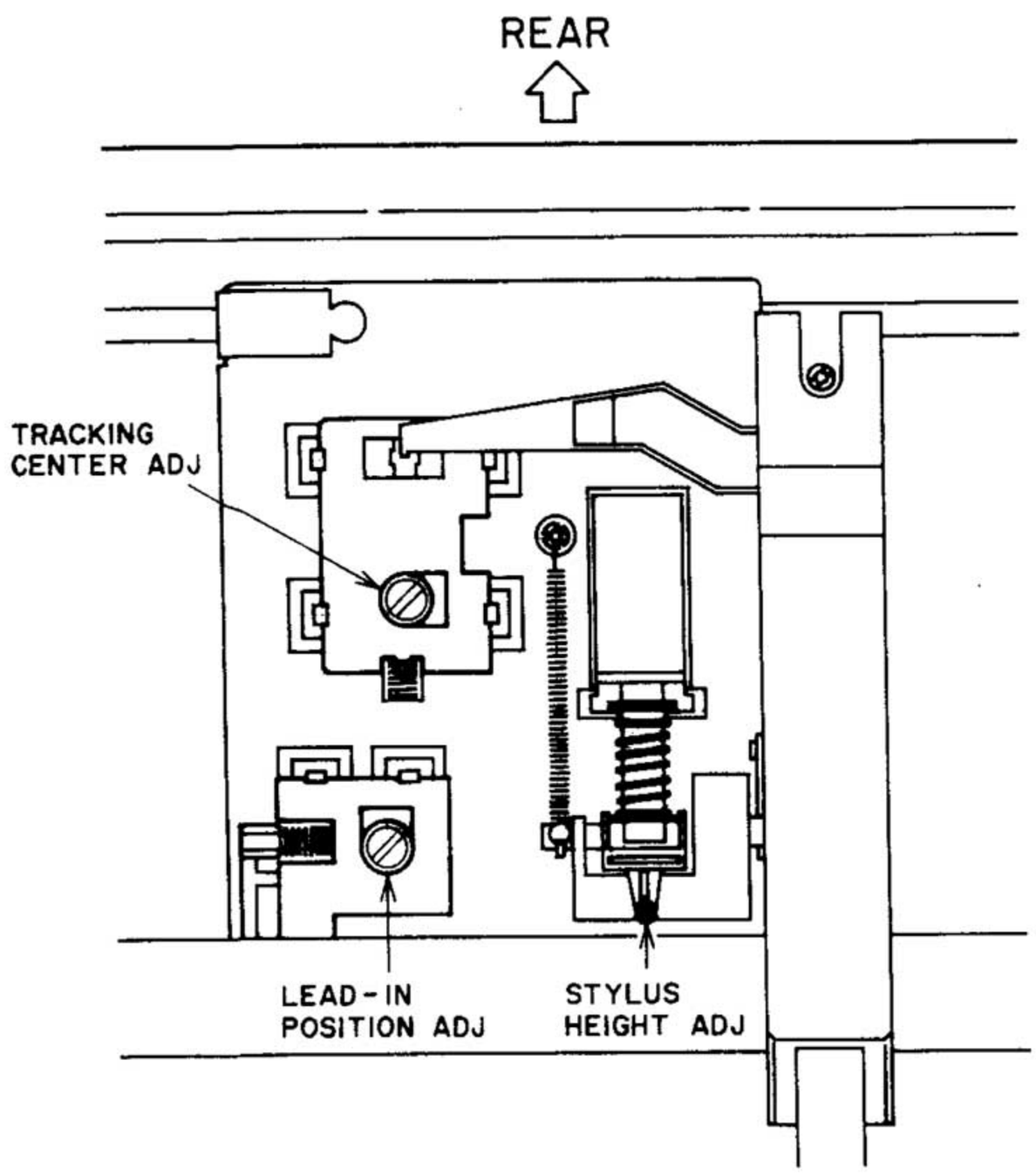

Fig. 6-1 Mechanical Adjustment Points

6-1 STYLUS HEIGHT ADJUSTMENT AT ARM UP POSITION

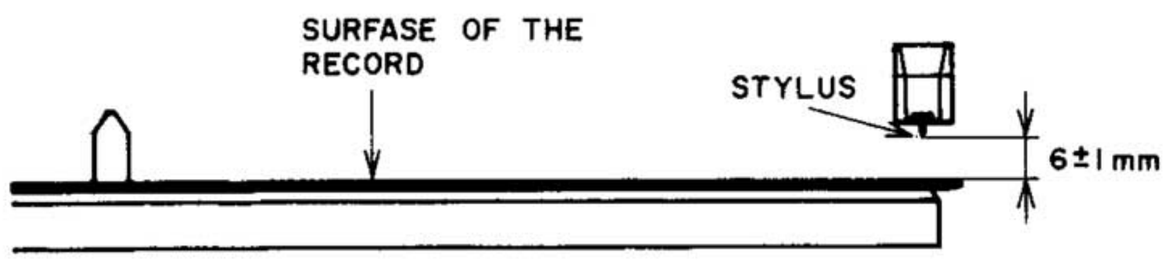

Fig. 6-2

With the TONE ARM in the Up-position, the stylus should be 6 ± 1 mm above the surface of the record.
If it is not, adjust the height by adjusting the STYLUS HEIGHT ADJUSTMENT SCREW.

CLOCKWISE: DOWN
COUNTERCLOCKWISE: UP

6-2 LEAD-IN POSITION ADJUSTMENT

1) Place a Record on the platter and play it.
2) Confirm the position where the stylus descends.
3) If this Lead-in position is incorrect it can be adjusted by turning the LEAD-IN POSITION ADJUSTMENT SCREW (Refer to Fig. 6-1).
   CLOCKWISE: To make the stylus descends away from the spindle.
   COUNTERCLOCKWISE: To make the stylus descends towards the spindle.

6-3 TRACKING SENSOR ADJUSTMENTS

1.) CONNECTION AND ADJUSTMENT POINT

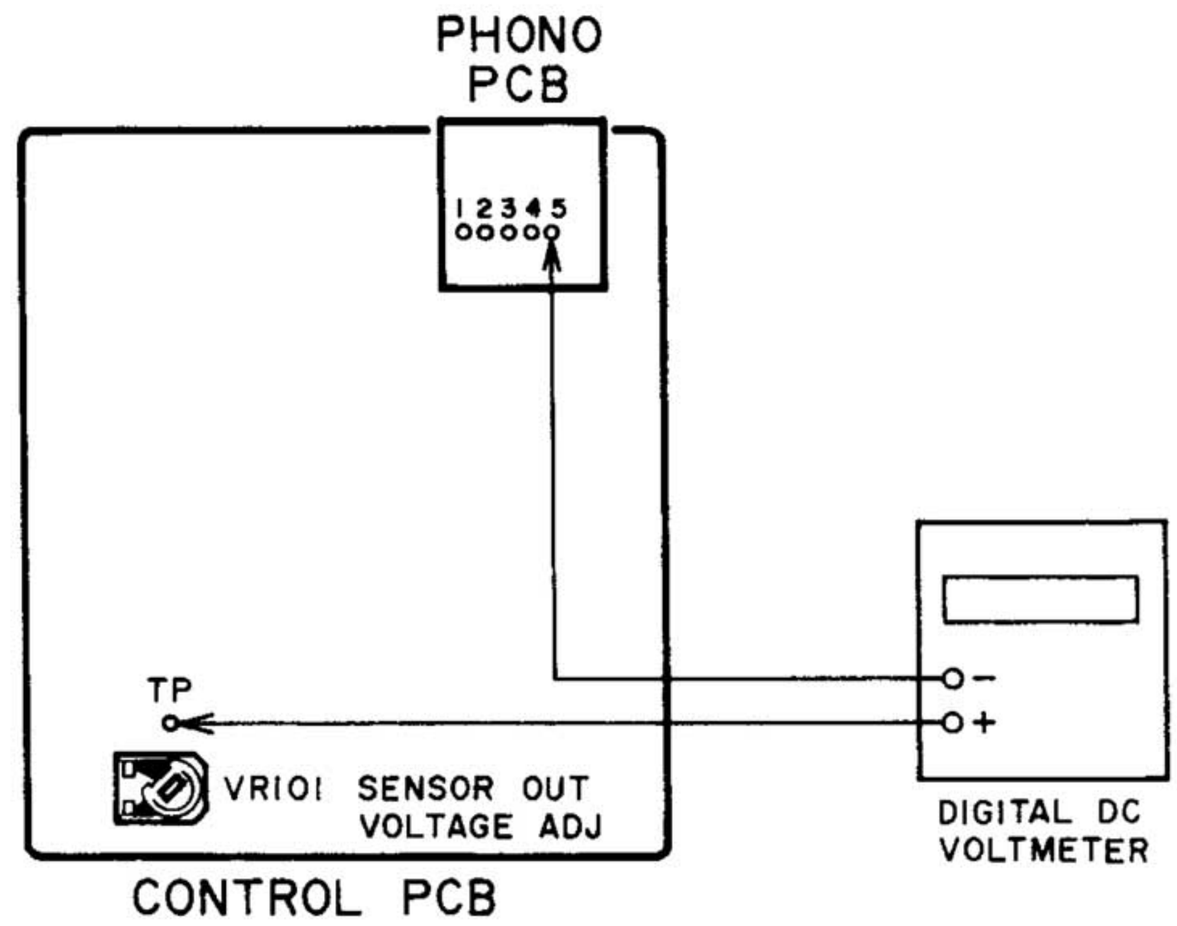

Fig. 6-3 Electrical Adjustment Point

2.) SENSOR OUTPUT VOLTAGE ADJUSTMENT

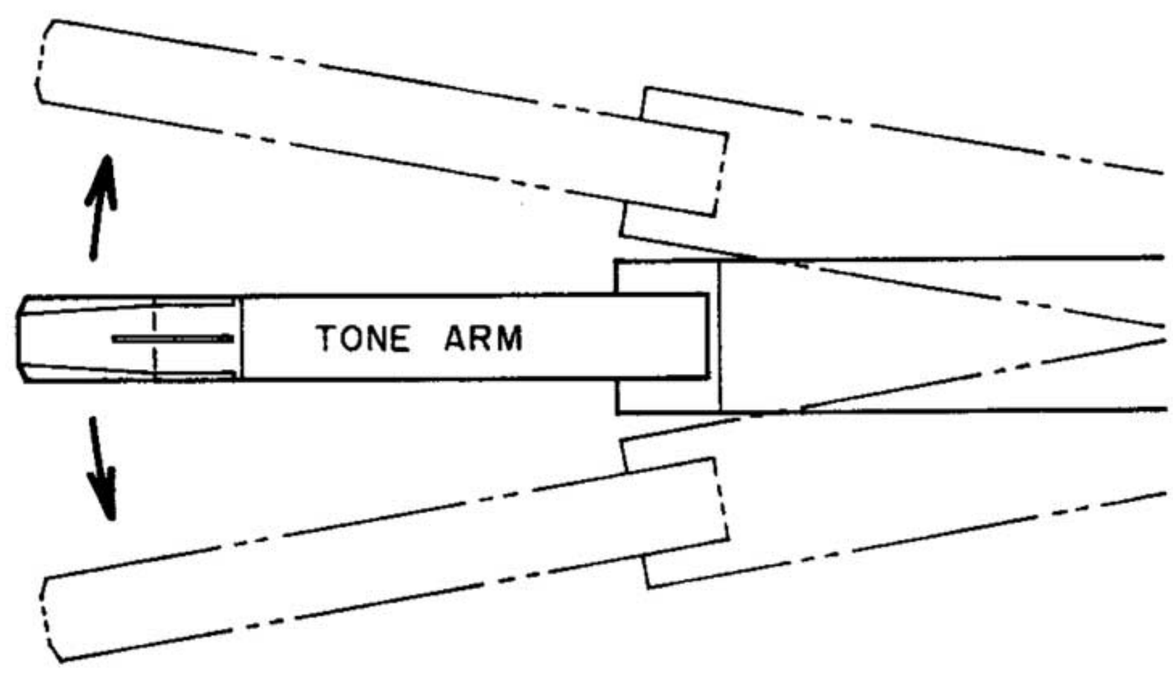

Fig. 6-4

1) Move the Tone arm to left side as shown Fig. 6-4.
2) Adjust VR101, so that the Digital DC Voltmeter Reading is within 9.3V to 9.5V.
3) Move the Tone arm to right side then confirm the Reading of Digital DC Voltmeter indicate minus (−) voltage.

3.) TRACKING CENTER VOLTAGE ADJUSTMENT

1) Slightly lift-up the Tone arm by finger, and release it.
2) Adjust TRACKING CENTER ADJUSTMENT SCREW (Refer to Fig. 6-1) so that the Digital DC Voltmeter Reading is 0.5 ± 0.3V.
3) Lift-up and Down the Tone arm by ARM LIFTER button, at the inside from Lead-in area.
4) Confirm the Voltage so that the Digital DC Voltmeter Reading is within the 0.5 ± 0.3V.

SECTION 2

PARTS LIST

TABLE OF CONTENTS

RECOMMENDED SPARE PARTS 11
1. PC BOARD BLOCK 11
2. CONTROL PC BOARD 11
3. MOTOR PC BOARD 11
4. OPERATION PC BOARD 11
5. LINER TRACKING BLOCK 12
6. FINAL ASSEMBLY BLOCK 14
INDEX 16

Resistors and Capacitors which are not listed in this parts list, please refer to COMMON LIST FOR SERVICE PARTS.

ATTENTION

1. When placing an order for parts, be sure to list the parts no. model no., and description of each part. If any of this information is omitted, there are instances in which parts cannot be shipped or the wrong parts will be delivered.
2. Please be careful not to make a mistake in the parts no. If the parts no. is in error, a part different from the one ordered may be delivered.
3. Because part numbers and part definitions and supply in the Preliminary Parts List may have been the subject of changes, please use this parts list for all future reference.

HOW TO USE THIS PARTS LIST

1. This Parts List shows those parts which are considered necessary for repairs. Other parts, such as resistors and capacitors, are shown in the "Common List for Service Parts" from which these parts should be selected and parts.
2. The Recommended Spare Parts List shows those parts in the Parts List which are considered particularly important for service.
3. Parts not shown in the Parts List and "Common List for Service Parts" will not in principle be supplied.
4. How to read the parts list

a) Mechanism Block

2. HEAD BASE BLOCK

REF. NO.	PART NO.	DESCRIPTION
2-1x	BH-T2023A320A	HEAD BASE BLOCK GX-F66R
2-2	HP-H2206A010A	HEAD R/P PR4-8FU C
2-3	ZS-477876	PAN20×03STL CMT
2-4	ZS-536488	BID20×08STL CMT
2-5	ZG-402895	CS ANGLE ADJUST SPRING

SP (Service Parts) Classification

A small "x" indicates the inability to show that particular part in the Photo or Illustration.

This number corresponds with the individual parts index number in that figure

This number corresponds with the Figure Number

b) P.C Board Block

6. SYS. CON. P C BOARD BLOCK

REF. NO.	PART NO.	DESCRIPTION
6-1	BA-T2034A070A	PC SYS CON BLK GX-F44R
6-IC1	EI-324536	IC HD14049BP
6-IC2	EI-336801	IC MB8841-564M
6-IC3	EI-331661	IC SN7405N
6-IC4	EI-336725	IC M54527P
6-TR1to4	ET-200985	TR 2SC2603 F,G
6-TR5to28	ET-554657	TR 2SA733A P,Q
6-D1	ED-318292	D SILICON H 1S2473T-77 T26
6-D2to4	ED-308952	D GERMA V 1K34A-LR F07
6-D5to10	ED-318292	D SILICON H 1S2473T-77 T26
6-X1	EI-318384	OSC X'TAL NC-18C 3.579545MHZ

SP (Service Parts) Classification

These reference symbols correspond with component symbols in the Schematic Diagrams.

5. The kind of part and its installation position can both be determined by the Part Number. To determine where a part number is listed, utilize the Parts Index at the end of the Parts List. It is necessary first of all to find the Part Number. This can be accomplished by using the Reference Number listed at the right of the part number in the Parts Index.

WARNING

⚠ INDICATES SAFETY CRITICAL COMPONENTS. FOR CONTINUED SAFETY, REPLACE SAFETY CRITICAL COMPONENTS ONLY WITH MANUFACTURE'S RECOMMENDED PARTS

AVERTISSEMENT

⚠ IL INDIQUE LES COMPOSANTS CRITIQUES DE SÉCURITÉ. POUR MAINTENIR LE DEGRÉ DE SÉCURITÉ DE L'APPAREIL, NE REMPLACER QUE DES PIÉCES RECOMMANDEES PAR LE FABRICANT

RECOMMENDED SPARE PARTS

Because, if the parts listed below are on hand, almost any repair can be accomplished, we suggest that you stock these Recommended Spare Parts Items.

NO.		PART NO.	DESCRIPTION
1	N	BM-716105	MOTOR BLK DDM-522QM-10
2	N	BM-716397	MOTOR PART
3	N	BT-716114	⚠ TRANS POWER (C,A)
4	N	BT-716115	⚠ TRANS POWER (E,V)
5	N	BT-716412	⚠ TRANS POWER (S,B)
6	N	BT-716113	⚠ TRANS POWER (U)
7		ED-284095	⚠ D SILICON SIVB10 100/0.6A
8		ED-707402	⚠ D ZENER H RD11E B2
9	N	ED-716118	D SILICON H EM-1
10		ED-302379	D SILICON H 1SS53
11		ED-557447	D SILICON H 1S1588
12		ED-300269	D ZENER H RD9.1E B
13	N	EF-300597	⚠ FUSE FST3100 T 250V 0.25A [U,E,B,S]
14		EF-308848	⚠ FUSE TSC 125V 0.40A [C,A]
15	N	EF-300575	FUSE EAWK T 250V 0.10A [U]
16	N	EF-300596	FUSE FST3100 T 250V 0.20A [U,E,B,S]
17	N	EI-716116	IC FA301
18		EI-213390	IC NJM4558D
19		EI-331275	IC TC9142P
20		EI-704424	IC μPC4558C
21	N	EI-716119	OSC X'TAL HC-18U 4.9152MHZ
22	N	EP-716716	SOLENOID
23		EQ-328529	RELAY LEAD LAB2NS 2NO 12V
24	N	ES-716111	⚠ SW POWER [U]
25	N	ES-716413	⚠ SW SELECTOR
26	N	ES-716106	SW PUSH
27	N	ES-716407	SW TACT B3F-3120
28	N	ET-716117	⚠ TR 2SD772 Q,P,E
29		ET-341937	⚠ TR 2SD882 P,Q
30	N	ET-716439	PHOTO SENSOR GP-1S08
31		ET-711116	TR DTA124F
32		ET-357065	TR DTC144F
33		ET-295255	TR FET 2SK68A M,N
34		ET-336735	TR 2SA733(A) P,K
35		ET-304447	TR 2SB647 C,D
36		ET-302502	TR 2SC2001 K
37		ET-398788	TR 2SC945L R
38		ET-303895	TR 2SD667 C,D
39		EV-336849	R S-FIX H KVSF807V 3P 203
40	N	MB-716440	BELT
41	N	MZ-716724	GEAR PULLEY WHEEL
42	N	MZ-716727	GEAR WORM

"NOTE" N: New Parts

SYMBOL FOR DESTINATION

[A] : AAL (U.S.A)
[B] : UK (England)
[C] : CSA (Canada)
[E] : CEE (Europe)
[S] : SAA (Australia)
[U] : U/T (Universal Area)
[V] : VDE (West Germany)

1. PC BOARD BLOCK

REF. NO.	PART NO.	DESCRIPTION
1-1A	BA-716406	PC CONTROL BLK AP-A50 (U,E,S)
1-1B	BA-716443	PC CONTROL BLK AP-A50 (C,A)
1-1C	BA-716419	PC CONTROL BLK AP-A50 (B)

2. CONTROL PC BOARD

REF. NO.	PART NO.	DESCRIPTION
2-IC101	EI-716116	IC FA301
2-IC102	EI-213390	IC NJM4558D
2-X101	ET-341937	⚠ TR 2SD882 P,Q
2-X102	ET-716117	⚠ TR 2SD772 Q,P,E
2-X103	ET-308867	TR 2SA1015 O,Y,GR
2-X104	ET-398788	TR 2SC945L R
2-X105	ET-303895	TR 2SD667 C,D
2-X106	ET-304447	TR 2SB647 C,D
2-X107	ET-295255	TR FET 2SK68A M,N
2-X108,109	ET-303895	TR 2SD667 C,D
2-RX101	ET-357065	TR DTC144F
2-RX103,104	ET-357065	TR DTC144F
2-RX105,106	ET-711116	TR DTA124F
2-BD101,102	ED-284095	⚠ D SILICON SIVB10 100/0.6A
2-ZD101,102	ED-707402	⚠ D ZENER H RD11E B2
2-D101to103	ED-716118	D SILICON H EM-1
2-D104to109	ED-557447	D SILICON H 1S1588
2-D111to120	ED-557447	D SILICON H 1S1588
2-RY101	EQ-328529	RELAY LEAD LAB2NS 2NO 12V
2-VR101	EV-336849	R S-FIX H KVSF807V 3P 203
2-C101	EC-716794	C EC V 102 35DC 15×20
2-C102,103	EC-716795	C EC V 102 25DC 15×20
2-F101A	EF-300597	⚠ FUSE FST3100 T 250V 0.25A [U,E,B,S]
2-F101B	EF-308848	⚠ FUSE TSC 125V 0.40A [C,A]
2-F102,103	EF-300596	⚠ FUSE FST3100 T 250V 0.20A [U,E,B,S]

3. MOTOR PC BOARD

REF. NO.	PART NO.	DESCRIPTION
3-IC1	EI-704424	IC μPC4558C
3-IC2	EI-331275	IC TC9142P
3-X1	ET-398788	TR 2SC945L R
3-X3to8	ET-336735	TR 2SA733(A) P,K
3-X9to12	ET-302502	TR 2SC2001 K
3-X13	ET-398788	TR 2SC945L R
3-ZD1	ED-300269	D ZENER H RD9.1E B
3-D1,2	ED-302379	D SILICON H 1SS53
3-Q1	EI-716119	OSC X'TAL HC-18U 4.9152MHZ

4. OPERATION PC BOARD

REF. NO.	PART NO.	DESCRIPTION
4-LD101	ER-716108	D LED 5PR2
4-LD102	ER-716109	D LED 5PG2
4-SW101	ES-716106	SW PUSH
4-SW102to104	ES-716407	SW TACT B3F-3120
4-SW106	ES-716106	SW PUSH

LINEAR TRACKING BLOCK

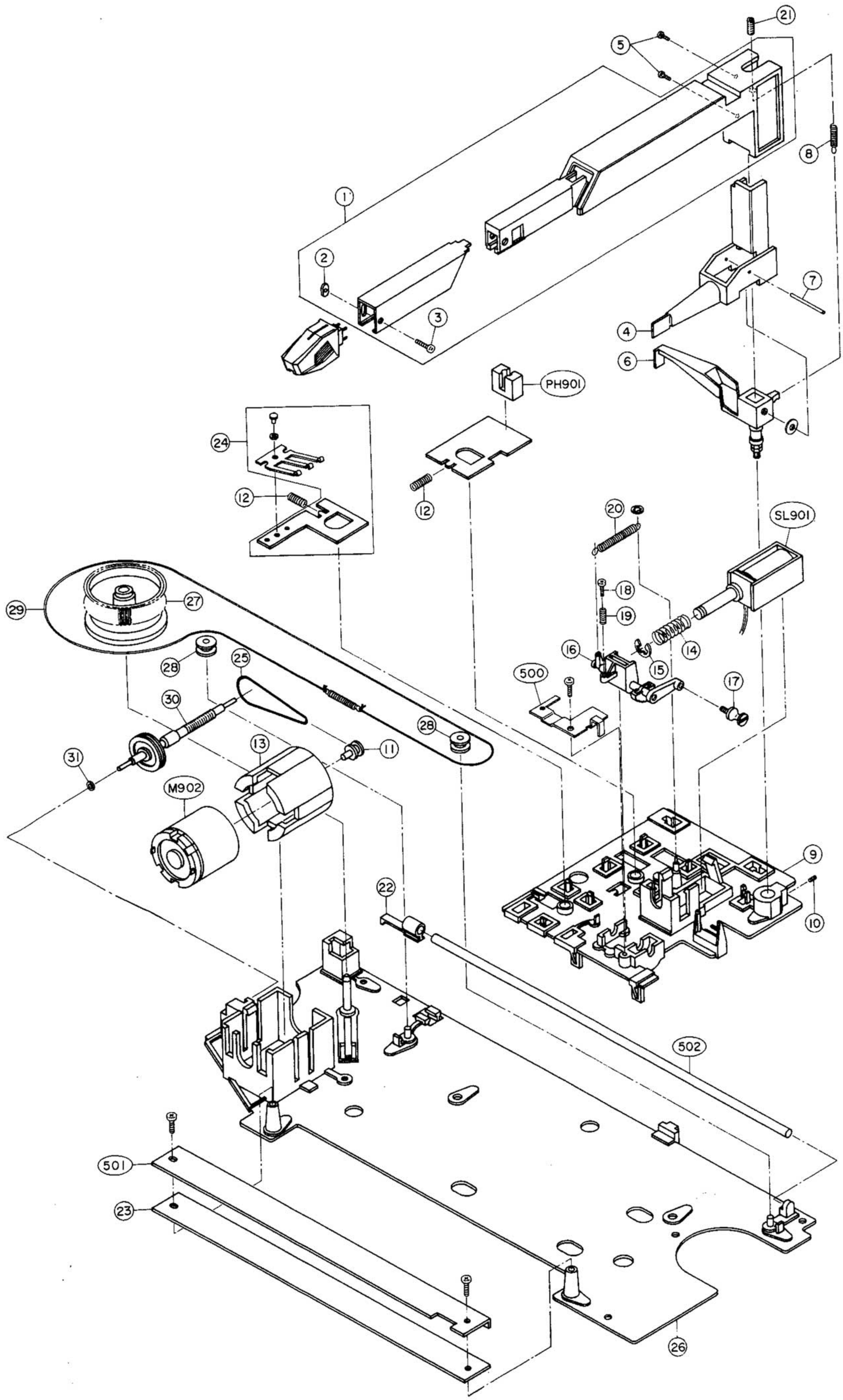

5. LINER TRACKING BLOCK

REF. NO.	PART NO.	DESCRIPTION
5-1	TP-716399	TONE ARM
5-1B	TP-716733	TONE ARM-B
5-2	ZW-716708	N SPECIAL
5-3	ZS-716915	SCREW SPECIAL PAN20×09
5-4	TP-716709	HOLDER TONE ARM
5-5	ZS-716913	SCREW SPECIAL T20×06
5-6	TP-716711	SHAFT BLK TONE ARM
5-7	MH-716712	PIN
5-8	ZG-716710	SP STYLUS PRESSURE
5-9	TP-716713	BASE SLIDE
5-10	ZS-384840	-SET30×05STL NI3 HP
5-11	SK-716438	PULLEY
5-12	ZG-716715	SP
5-13	MB-716728	CUSHION MOTOR
5-14	ZG-716717	SP SOLENOID
5-15	ZW-270134	RING E 500SUP CMT
5-16	MS-716718	SHAFT CUEING
5-17	MS-716719	GUIDE V
5-18	ZS-716914	SCREW SPECIAL 20×08
5-19	ZG-716720	SP
5-20	ZG-716721	SP CUEING
5-21	ZS-716917	SCREW SPECIAL STYLUS PRESSURE ADJ
5-22	MZ-716730	HOLDER RAIL
5-23	EA-716729	PC POSITION DETECTOR
5-24	MZ-716722	SLIDER PART
5-25	MB-716440	BELT
5-26	MA-716723	CHASSIS PU UNIT MECHA
5-27	MZ-716724	GEAR PULLEY WHEEL
5-28	MR-716725	ROLLER
5-29	TP-716726	STRING WIRE
5-30	MZ-716727	GEAR WORM
5-31	ZW-305546	PW21×040×025PSL
5-M902	BM-716397	MOTOR PART
5-SL901	EP-716716	SOLENOID
5-PH901	ET-716439	PHOTO SENSOR GP-1S08

NOTE: Parts listed in 1 to PH901 on the exploded view and list are normaly stocked for replacement purpose. The remaining parts shown in this manual are not normaly stocked, because they are seldom required for routine service.

Optional Accessory

Cartridge PC-35

FINAL ASSEMBLY BLOCK

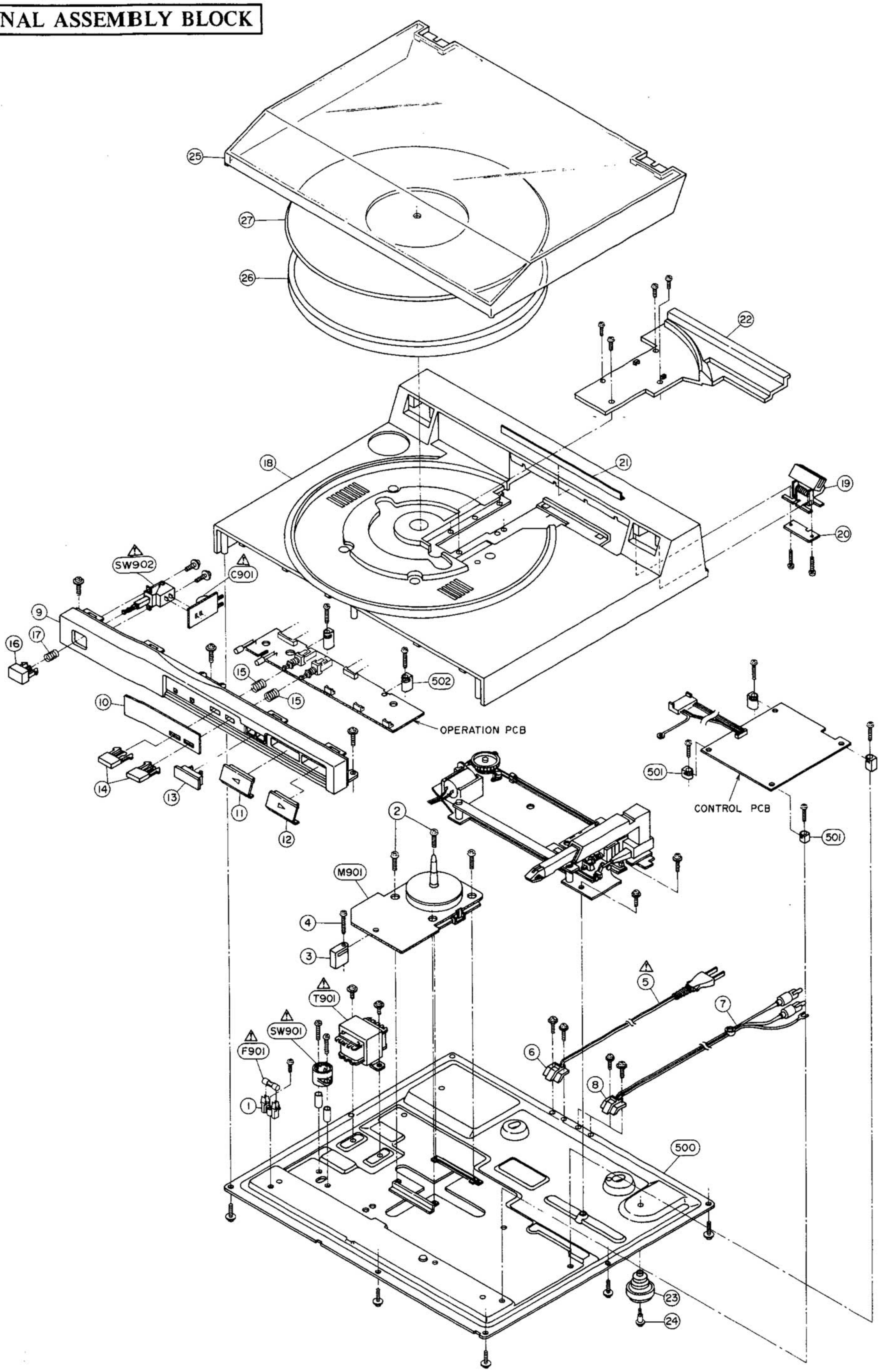

6. FINAL ASSEMBLY BLOCK

REF. NO.	PART NO.	DESCRIPTION
6-1	EJ-706493	HOLDER FUSE
6-2	ZS-428308	T2BID40x12STL CMT
6-3	TP-716401	PC BOARD SUPPORT
6-4	ZS-707046	T2BID30x25STL CMT
6-5A	EW-716402	⚠ AC CORD 2 CORES [U]
6-5B	EW-716410	⚠ AC CORD 2 CORES C [C]
6-5C	EW-707626	⚠ AC CORD C,A [A]
6-5D	EW-716414	⚠ AC CORD E [E,V]
6-5E	EW-716417	⚠ AC CORD B [B]
6-5F	EW-716411	⚠ AC CORD S [S]
6-6A	TP-716403	CORD RETAINER [U,A]
6-6B	TP-716415	CORD RETAINER [E,V,S]
6-6C	TP-716418	CORD RETAINER [C]
6-6D	TP-716732	CORD HOLDER [B]
6-7A	EW-716404	CORD 2P AUDIO [U,C,E,V,B,S]
6-7B	EW-716442	CORD 2P AUDIO [A]
6-8A	TP-716405	CORD RETAINER [U,C,A]
6-8B	TP-716416	CORD RETAINER [E,V,S]
6-8C	TP-716418	CORD RETAINER [B]
6-9	BD-716408	PANEL FRONT AP-A50
6-9B	BD-716431	PANEL FRONT AP-A50-B
6-10	SZ-716409	SIGN WINDOW
6-11	SK-716420	KNOB PLAY
6-11B	SK-716432	KNOB PLAY-B
6-12	SK-716796	KNOB CUT
6-12B	SK-716797	KNOB CUT-B
6-13	SK-716421	KNOB CUE
6-13B	SK-716433	KNOB CUE-B
6-14	SK-356483B	KNOB PUSH (A)-B
6-15	ZG-716422	SP KNOB
6-16	SK-716423	KNOB POWER
6-16B	SK-716434	KNOB POWER-B
6-17	ZG-716424	SP KNOB
6-18	BC-716425	CABINET
6-18B	BC-716435	CABINET-B
6-19	TP-353712	HINGE ASSY AP-A2
6-20	TP-716426	HINGE RETAINER
6-21	SZ-716427	SCALE
6-21B	SZ-716436	SCALE-B
6-22	BC-716428	COVER CABINET
6-22B	BC-716437	COVER CABINET-B
6-23	SA-716429	FOOT
6-24	ZS-716430	SCREW SPECIAL
6-25	BC-B353247	DUST COVER PART
6-26	TP-716110	TURN TABLE
6-27	TP-348266B	TABLE SHEET B
6-T901A	BT-716113	⚠ TRANS POWER (U)
6-T901B	BT-716114	⚠ TRANS POWER (C,A)
6-T901C	BT-716115	⚠ TRANS POWER (E,V)
6-T901D	BT-716412	⚠ TRANS POWER (S,B)
6-SW901	ES-716413	⚠ SW SELECTOR
6-SW902	ES-716111	⚠ SW POWER [U]
6-F901	EF-300575	⚠ FUSE EAWK T 250V 0.10A [U]
6-M901	BM-716105	MOTOR BLK DDM-511QM-10
6-C901	EC-712778	⚠ C CE 103 400VAC

SYMBOL FOR COLOR VARIATION

NON : STANDARD COLOR
B or BL : BLACK

NOTE: Parts listed in 1 to C901 on the exploded view and list are normaly stocked for replacement purpose. The remaining parts shown in this manual are not normaly stocked, because they are seldom required for routine service.

INDEX

PART NO.	REF. NO.	PART NO.	REF. NO.	PART NO.	REF. NO.	PART NO.	REF. NO.
BA-716406	1-1A	EF-300597	2-F101A	EW-716404	6-7A	ZG-716422	6-15
BA-716419	1-1C	EF-308848	2-F101B	EW-716410	6-5B	ZG-716424	6-17
BA-716443	1-1B	EI-213390	2-IC102	EW-716411	6-5F	ZG-716710	5-8
BC-B353247	6-25	EI-331275	3-IC2	EW-716414	6-5D	ZG-716715	5-12
BC-716425	6-18	EI-704424	3-IC1	EW-716417	6-5E	ZG-716717	5-14
BC-716428	6-22	EI-716116	2-IC101	EW-716442	6-7B	ZG-716720	5-19
BC-716435	6-18B	EI-716119	3-Q1	MA-716723	5-26	ZG-716721	5-20
BC-716437	6-22B	EJ-706493	6-1	MB-716440	5-25	ZS-384840	5-10
BD-716408	6-9	EP-716716	5-SL901	MB-716728	5-13	ZS-428308	6-2
BD-716431	6-9B	EQ-328529	2-RY101	MH-716712	5-7	ZS-707046	6-4
BM-716105	6-M901	ER-716108	4-LD101	MR-716725	5-28	ZS-716430	6-24
BM-716397	5-M902	ER-716109	4-LD102	MS-716718	5-16	ZS-716913	5-5
BT-716113	6-T901A	ES-716106	4-SW101	MS-716719	5-17	ZS-716914	5-18
BT-716114	6-T901B	ES-716106	4-SW106	MZ-716722	5-24	ZS-716915	5-3
BT-716115	6-T901C	ES-716111	6-SW902	MZ-716724	5-27	ZS-716917	5-21
BT-716412	6-T901D	ES-716407	4-SW102	MZ-716727	5-30	ZW-270134	5-15
EA-716729	5-23	ES-716407	4-SW103	MZ-716730	5-22	ZW-305546	5-31
EC-712778	6-C901	ES-716407	4-SW104	SA-716429	6-23	ZW-716708	5-2
EC-716794	2-C101	ES-716413	6-SW901	SK-356483B	6-14		
EC-716795	2-C102	ET-295255	2-X107	SK-716420	6-11		
EC-716795	2-C103	ET-302502	3-X9	SK-716421	6-13		
ED-284095	2-BD101	ET-302502	3-X10	SK-716423	6-16		
ED-284095	2-BD102	ET-302502	3-X11	SK-716432	6-11B		
ED-300269	3-ZD1	ET-302502	3-X12	SK-716433	5-11		
ED-302379	3-D1	ET-303895	2-X105	SK-716433	6-13B		
ED-302379	3-D2	ET-303895	2-X108	SK-716434	6-16B		
ED-557447	2-D104	ET-303895	2-X109	SK-716796	6-12		
ED-557447	2-D105	ET-304447	2-X106	SK-716797	6-12B		
ED-557447	2-D106	ET-308867	2-X103	SZ-716409	6-10		
ED-557447	2-D107	ET-336735	3-X3	SZ-716427	6-21		
ED-557447	2-D108	ET-336735	3-X4	SZ-716436	6-21B		
ED-557447	2-D109	ET-336735	3-X5				
ED-557447	2-D111	ET-336735	3-X6	TP-348266B	6-27		
ED-557447	2-D112	ET-336735	3-X7	TP-353712	6-19		
ED-557447	2-D113	ET-336735	3-X8	TP-716110	6-26		
ED-557447	2-D114	ET-341937	2-X101	TP-716399	5-1		
ED-557447	2-D115	ET-357065	2-RX101	TP-716401	6-3		
ED-557447	2-D116	ET-357065	2-RX103	TP-716403	6-6A		
ED-557447	2-D117	ET-357065	2-RX104	TP-716405	6-8A		
ED-557447	2-D118	ET-398788	2-X104	TP-716415	6-6B		
ED-557447	2-D119	ET-398788	3-X1	TP-716416	6-8B		
ED-557447	2-D120	ET-398788	3-X2	TP-716418	6-6C		
ED-707402	2-ZD101	ET-398788	3-X13	TP-716418	6-8C		
ED-707402	2-ZD102	ET-711116	2-RX105	TP-716426	6-20		
ED-716118	2-D101	ET-711116	2-RX106	TP-716709	5-4		
ED-716118	2-D102	ET-716117	2-X102	TP-716711	5-6		
ED-716118	2-D103	ET-716439	5-PH901	TP-716713	5-9		
EF-300575	6-F901	EV-336849	2-VR101	TP-716726	5-29		
EF-300596	2-F102	EW-707626	6-5C	TP-716732	6-6D		
EF-300596	2-F103	EW-716402	6-5A	TP-716733	5-1B		

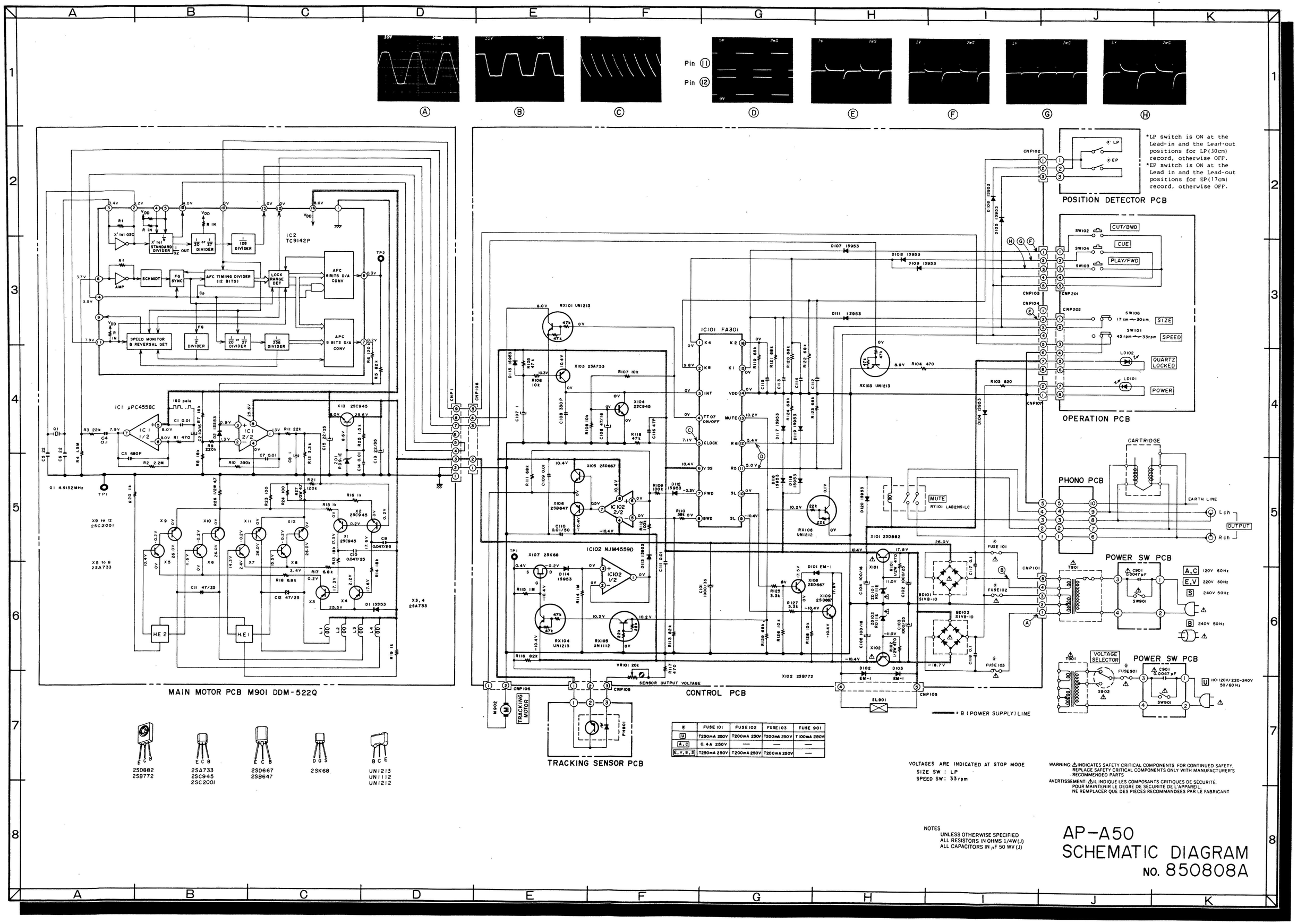

※	FUSE 101	FUSE 102	FUSE 103	FUSE 901
U	T250mA 250V	T200mA 250V	T200mA 250V	T100mA 250V
A, C	0.4A 250V	—	—	—
E, V, B, S	T250mA 250V	T200mA 250V	T200mA 250V	—

VOLTAGES ARE INDICATED AT STOP MODE
SIZE SW : LP
SPEED SW : 33 rpm

WARNING: ⚠ INDICATES SAFETY CRITICAL COMPONENTS. FOR CONTINUED SAFETY, REPLACE SAFETY CRITICAL COMPONENTS ONLY WITH MANUFACTURER'S RECOMMENDED PARTS.

AVERTISSEMENT: ⚠ IL INDIQUE LES COMPOSANTS CRITIQUES DE SÉCURITÉ. POUR MAINTENIR LE DEGRÉ DE SÉCURITÉ DE L'APPAREIL, NE REMPLACER QUE DES PIÈCES RECOMMANDÉES PAR LE FABRICANT

NOTES
UNLESS OTHERWISE SPECIFIED
ALL RESISTORS IN OHMS 1/4W(J)
ALL CAPACITORS IN μF 50 WV(J)

AP-A50
SCHEMATIC DIAGRAM
NO. 850808A

AKAI MODEL AP-A50/C

SCHEMATIC DIAGRAM AND PC BOARDS

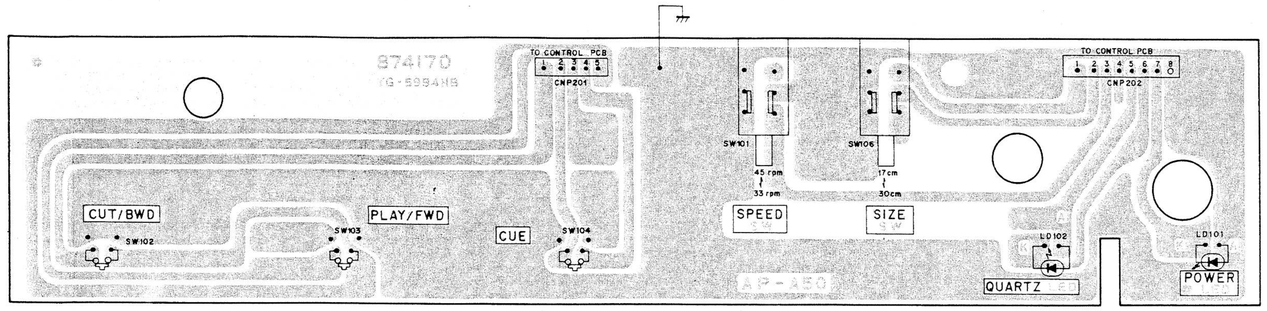

OPERATION PCB

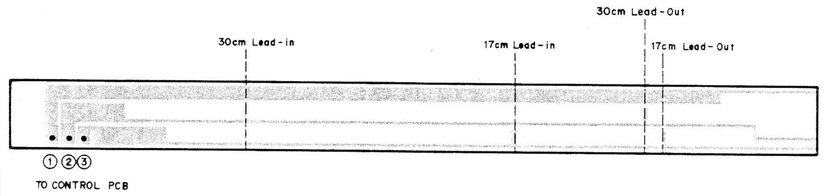

POSITION DETECTOR PCB

X1, X2, X13 ..... 2SC945 or 2SC2308 or 2SC1815 or 2SC2785
X3 to X8 ..... 2SA733 or 2SA844 or 2SA1015 or 2SA1175
X9 to X12 ..... 2SC2001 or 2SC2120
IC1 ..... μPC4558C or NJM4558D or RC4558P

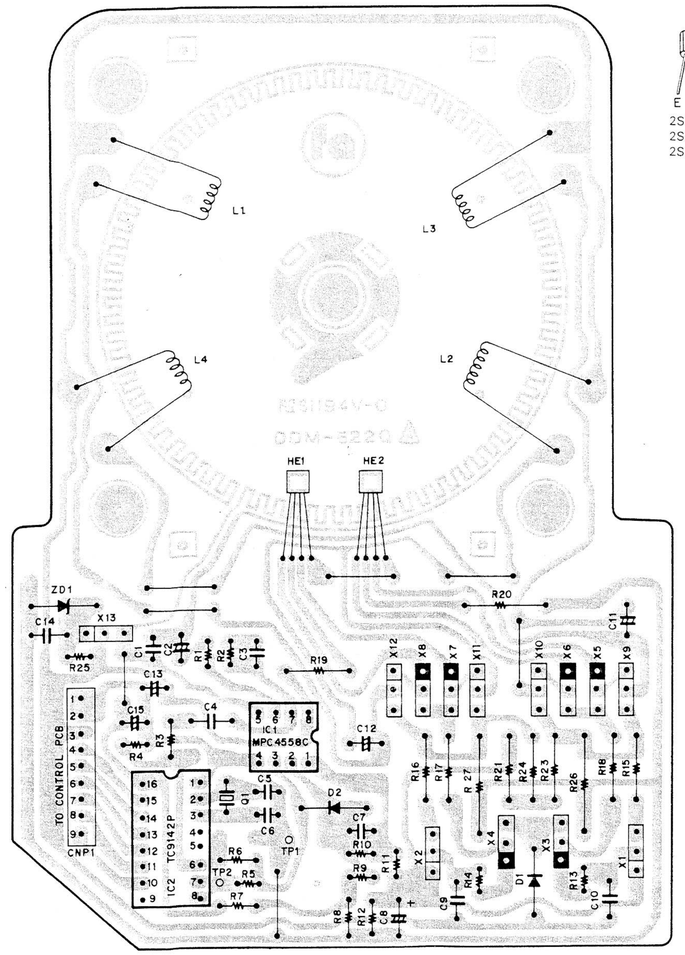

M901 MAIN MOTOR
DDM-522Q

2SC945
2SA733
2SC2001

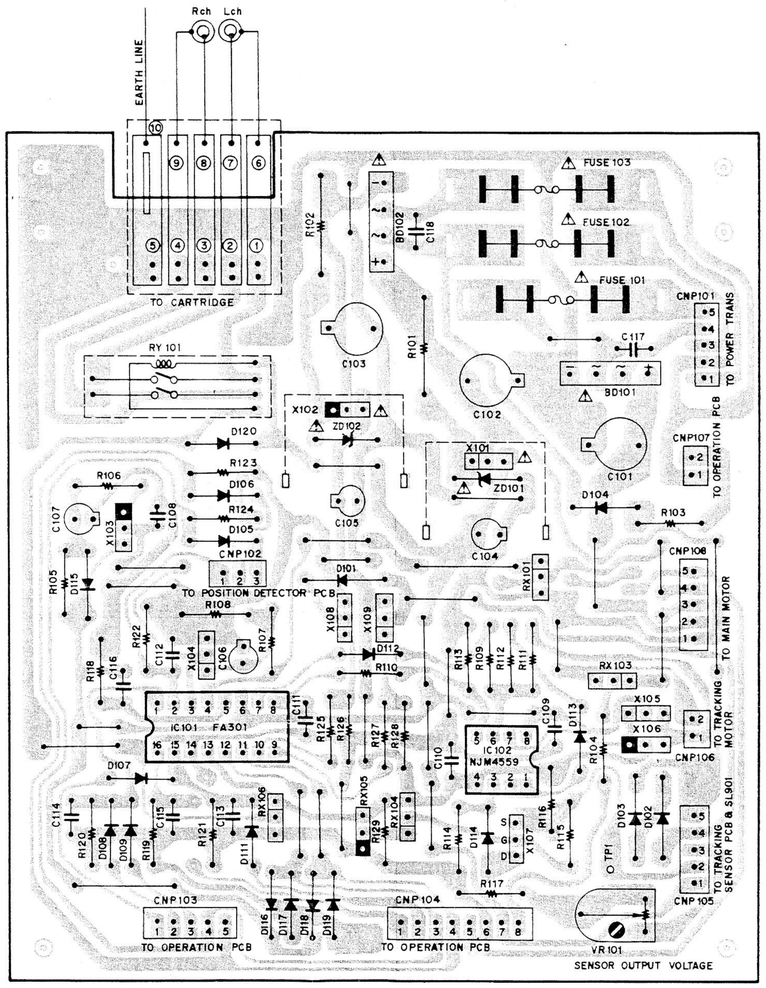

CONTROL PCB

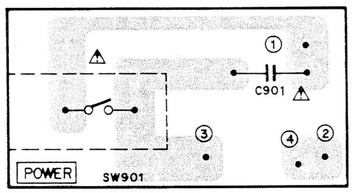

POWER SW PCB

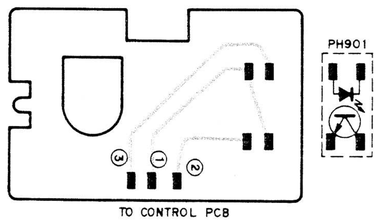

TRACKING SENSOR PCB

X101 ..... 2SD882
X102 ..... 2SB772
X103 ..... 2SA733
X104 ..... 2SC945
X105, 108, 109 ..... 2SD667
X106 ..... 2SB647
X107 ..... 2SK68

RX101, 103, 104 ..... UN1213
RX105 ..... UN1112
RX106 ..... UN1212

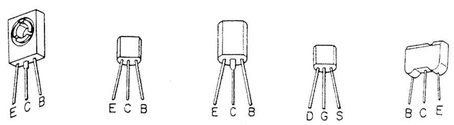

2SD882 2SB772 | 2SA733 2SC945 | 2SD667 2SB647 | 2SK68 | UN1213 UN1112 UN1212

WARNING: ⚠ INDICATES SAFETY CRITICAL COMPONENTS. FOR CONTINUED SAFETY, REPLACE SAFETY CRITICAL COMPONENTS ONLY WITH MANUFACTURER'S RECOMMENDED PARTS.

AVERTISSEMENT: ⚠ IL INDIQUE LES COMPOSANTS CRITIQUES DE SÉCURITÉ. POUR MAINTENIR LE DEGRÉ DE SÉCURITÉ DE L'APPAREIL, NE REMPLACER QUE DES PIÈCES RECOMMANDÉES PAR LE FABRICANT