SERVICE MANUAL

PARTS LIST

AP-006

MODEL AP-006

AKAI

www.vinylengine.com

SECTION 1

SERVICE MANUAL

TABLE OF CONTENTS

I. **TECHNICAL DATA** 2
II. **DISMANTLING OF UNIT** 3
III. **CONTROLS AND PARTS LOCATIONS** 4
IV. **ADJUSTMENT** 6
1. POWER SOURCE VOLTAGE ADJUSTMENT 6
2. SPEED ADJUSTMENT 6
3. TONE ARM HEIGHT ADJUSTMENT 7
4. TONE ARM REST HEIGHT ADJUSTMENT 8
5. OVERHANG ADJUSTMENT 9
V. **TROUBLE SHOOTING CHART** 11

www.vinylengine.com

I. TECHNICAL DATA

TURNTABLE SECTION

TYPE	Direct drive turntable
PLATTER	325 mm diameter alloy die-cast (Weight: 1.15 kg)
SPEED	33-1/3 and 45 rpm
MOTOR	6-pole outer rotor AC servo controlled motor
WOW AND FLUTTER	Less than 0.035% WRMS
SIGNAL TO NOISE RATIO	Better than 58 dB (JIS), 48 dB (DIN), 69 dB (DIN B)
SPEED ADJUSTMENT RANGE	±4% at 33-1/3 rpm, ±5% at 45 rpm

TONEARM SECTION

TYPE	S-shaped static balanced type stainless steel tubular arm with inside force canceller and lateral balance weight
ARM HEIGHT ADJUSTMENT RANGE	17.3 mm +5, –3 mm (Factory adjusted to 17.3 mm cartridge height)
ARM LENGTH	230 mm
STYLUS PRESSURE ADJUSTMENT RANGE	0 to 3 gram
APPLICABLE CARTRIDGE WEIGHT	4 to 8 grams (8 to 12 grams using sub-weight)
OFF-SET ANGLE	22°
TRACKING ERROR ANGLE	Within ±2°
OVERHANG	15 mm
SHELL WEIGHT	13.5 grams
ARM LIFTER	Oil damped type

MISCELLANEOUS

POWER REQUIREMENTS	CSA models: 120V, 60 Hz CEE models: 220V, 50/60 Hz Other models: 110 to 120/220 to 240V, 50/60 Hz
DIMENSIONS	440(W) × 128(H) × 358(D) mm (17.3 × 5.0 × 14.1) inches
WEIGHT	9 kg (19.8 lbs)

* **For improvement purposes, specifications and design are subject to change without notice.**

www.vinylengine.com

II. DISMANTLING OF UNIT

In case of trouble, etc. necessitating disassembly, please disassemble in the order shown in photographs. Reassemble in reverse order.

3

1

4

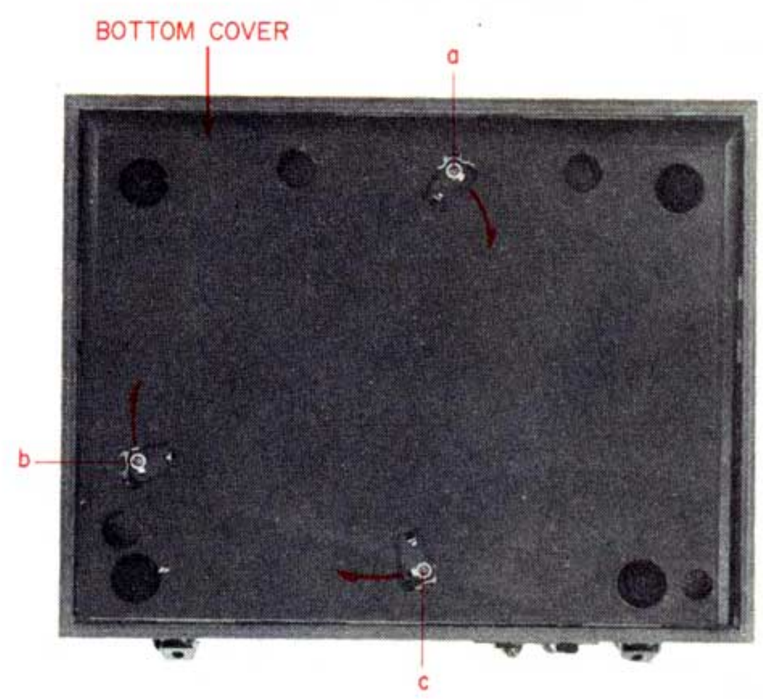

LOOSEN THESE SCREWS SLIGHTLY

2

5

www.vinylengine.com

III. CONTROLS AND PARTS LOCATIONS

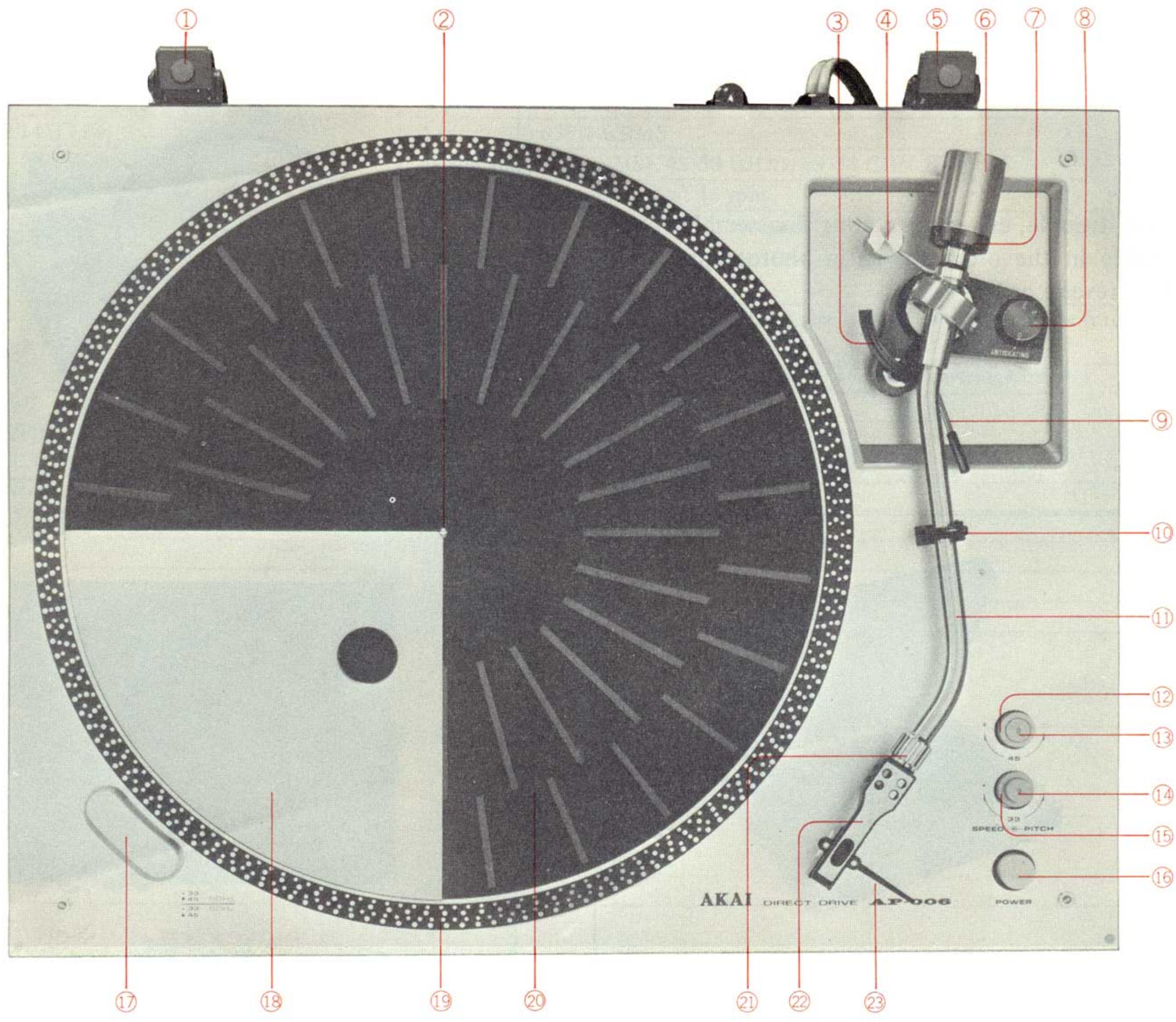

Fig. 1 Top View

1. Hinge
2. Spindle
3. Tone Arm Lifter
4. Lateral Weight
5. Hinge
6. Main Weight
7. Stylus Pressure Scale Ring
8. Anti-Skating Adjuster
9. Tone Arm Lifter Lever
10. Tone Arm Rest
11. Tone Arm
12. Pitch Control (45 rpm)
13. 45 rpm Speed Selector
14. 33-1/3 rpm Speed Selector
15. Pitch Control (33-1/3 rpm)
16. Power Switch
17. Built-in Strobe Light
18. Turntable Platter
19. Strobe Markings
20. Rubber Mat
21. Locking Nut
22. Cartridge Shell
23. Cartridge Shell Finger Lever

www.vinylengine.com

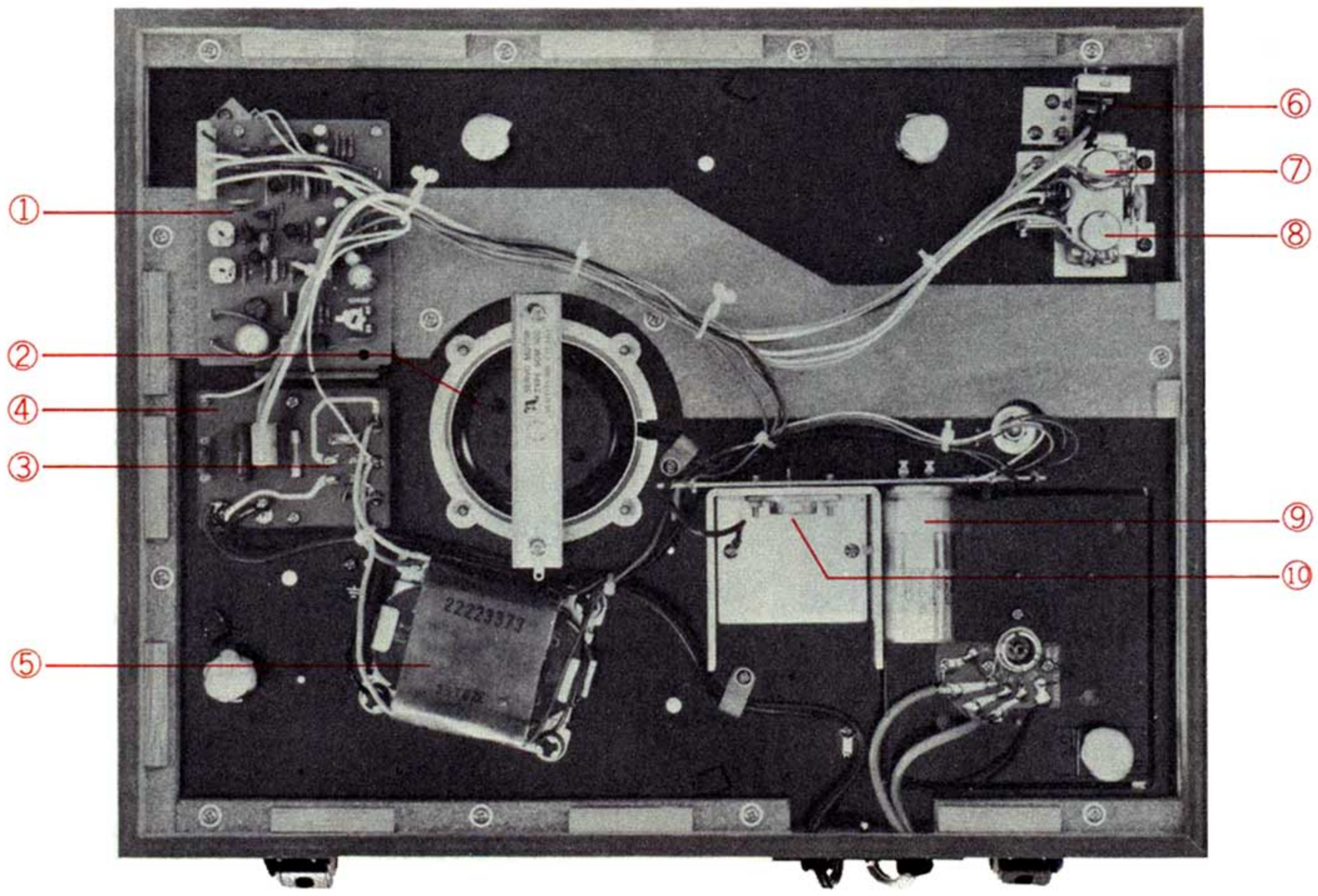

Fig. 2 Bottom View

1. Control P.C Board
2. AC Servo Motor
3. Voltage Selector
4. Voltage Selector P.C Board
5. Power Transformer
6. Power Switch
7. 33-1/3 rpm Speed/Pitch Control
8. 45 rpm Speed/Pitch Control
9. Phase Capacitor C614 4μ/250V
10. Power Transistor TR610 2SD198

www.vinylengine.com

IV. ADJUSTMENT

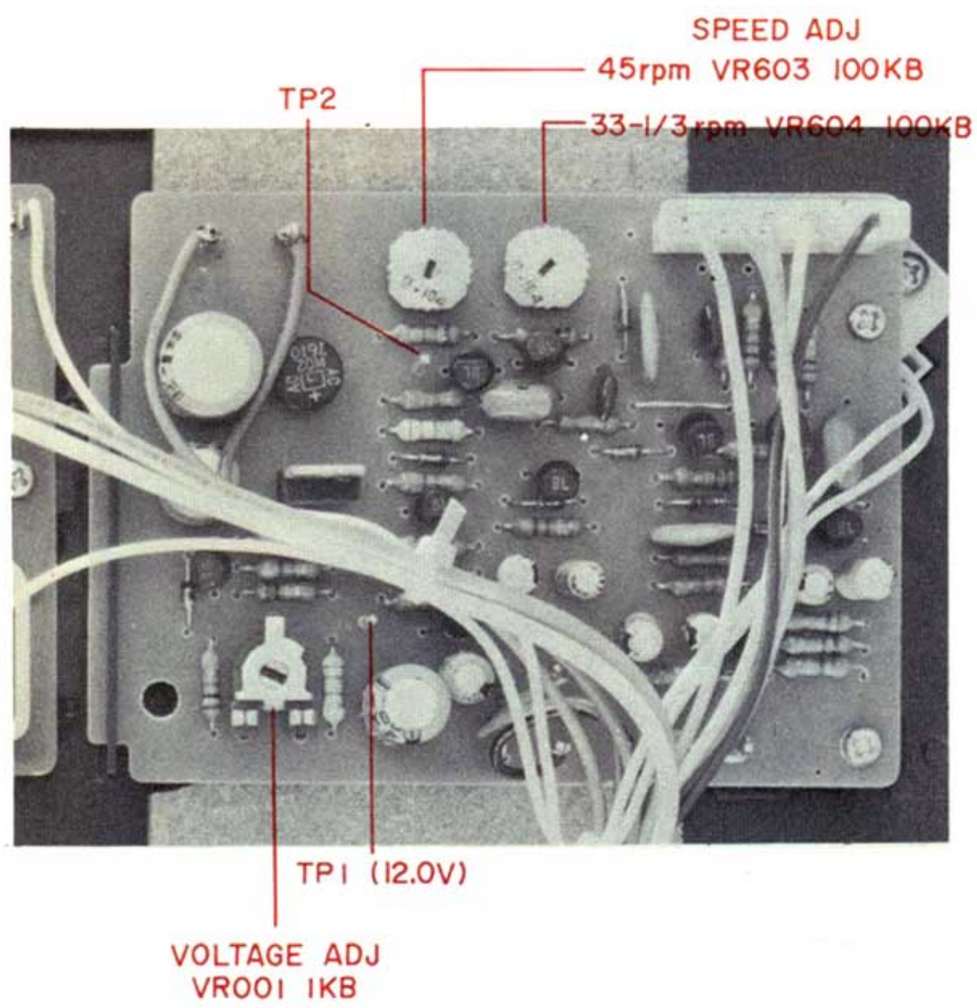

Fig. 3 Control P.C Board

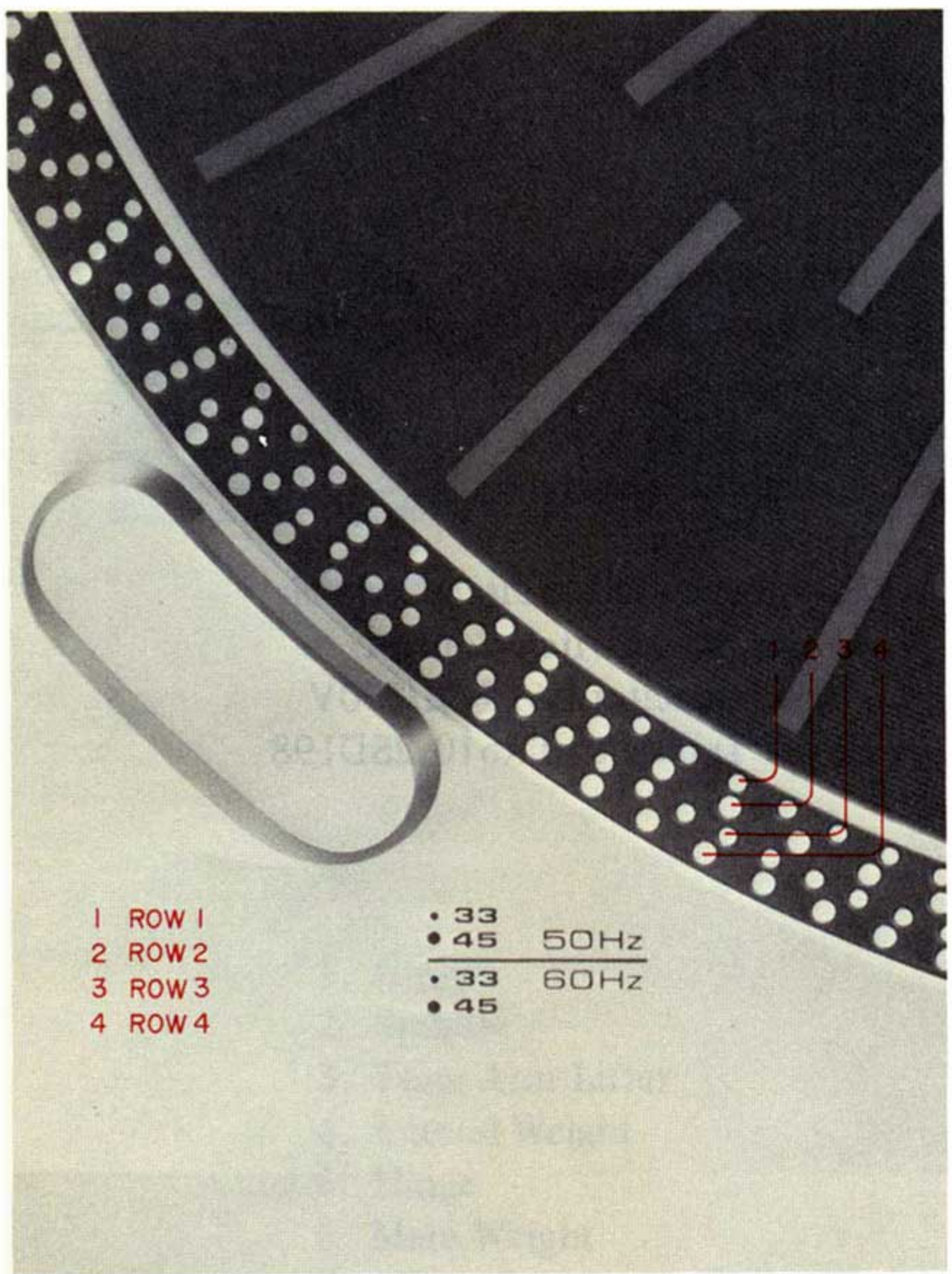

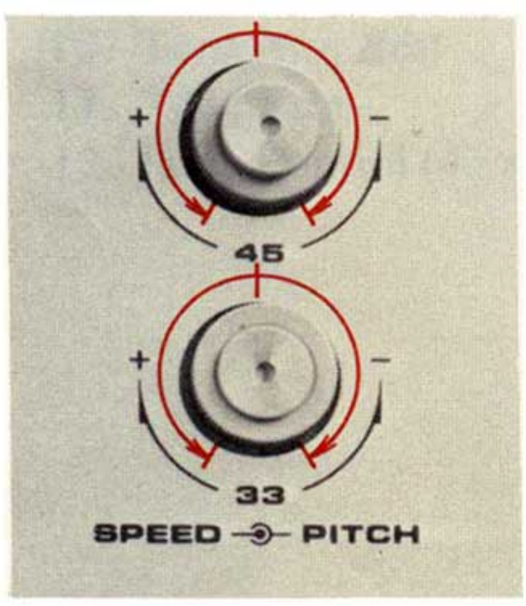

Fig. 4 Speed Adjustment

1. POWER SOURCE VOLTAGE ADJUSTMENT (Refer to Fig. 3)

Connect a DC Voltmeter to test point TP1 and adjust semi-fixed resistor VR001 1 kB so that the voltage is 12.0V.

2. SPEED ADJUSTMENT (Refer to Figs. 3 and 4)

The pitch control of each speed is adjusted with the outer knob of the Speed Selectors. The movable range of these Pitch Control Knobs is indicated by the arrow marks in Fig. 4(b). Therefore, it is necessary to set the Pitch Control Knob to the center of this movable range prior to speed adjustment.

2-1 50 Hz OPERATING FREQUENCY

1) Depress 33 Speed Selector.
2) Observe Row 1 revolutions of Strobe markings. Adjust VR604 100 kB (Fig. 3) until Row 1 Strobe markings appear to come to a stand-still.
3) Depress 45 Speed Selector.
4) Observe Row 2 revolutions of Strobe markings. Adjust VR603 100 kB (Fig. 3) until Row 2 Strobe markings appear to come to a stand-still.

2-2 60 Hz OPERATING FREQUENCY

1) Depress 33 Speed Selector.
2) Observe Row 3 revolutions of Strobe markings. Adjust VR604 100 kB (Fig. 3) until Row 3 Strobe markings appear to come to a stand-still.
3) Depress 45 Speed Selector.
4) Observe Row 4 revolutions of Strobe markings. Adjust VR603 100 kB (Fig. 3) until Row 4 Strobe markings appear to come to a stand-still.

* Perfect speed adjustment is attained when respective Strobe markings appear not to move.

* Once pre-set adjustments have been made, further readjustment is not necessary unless a Pitch Control is in some way moved. In this case, re-adjust.

www.vinylengine.com

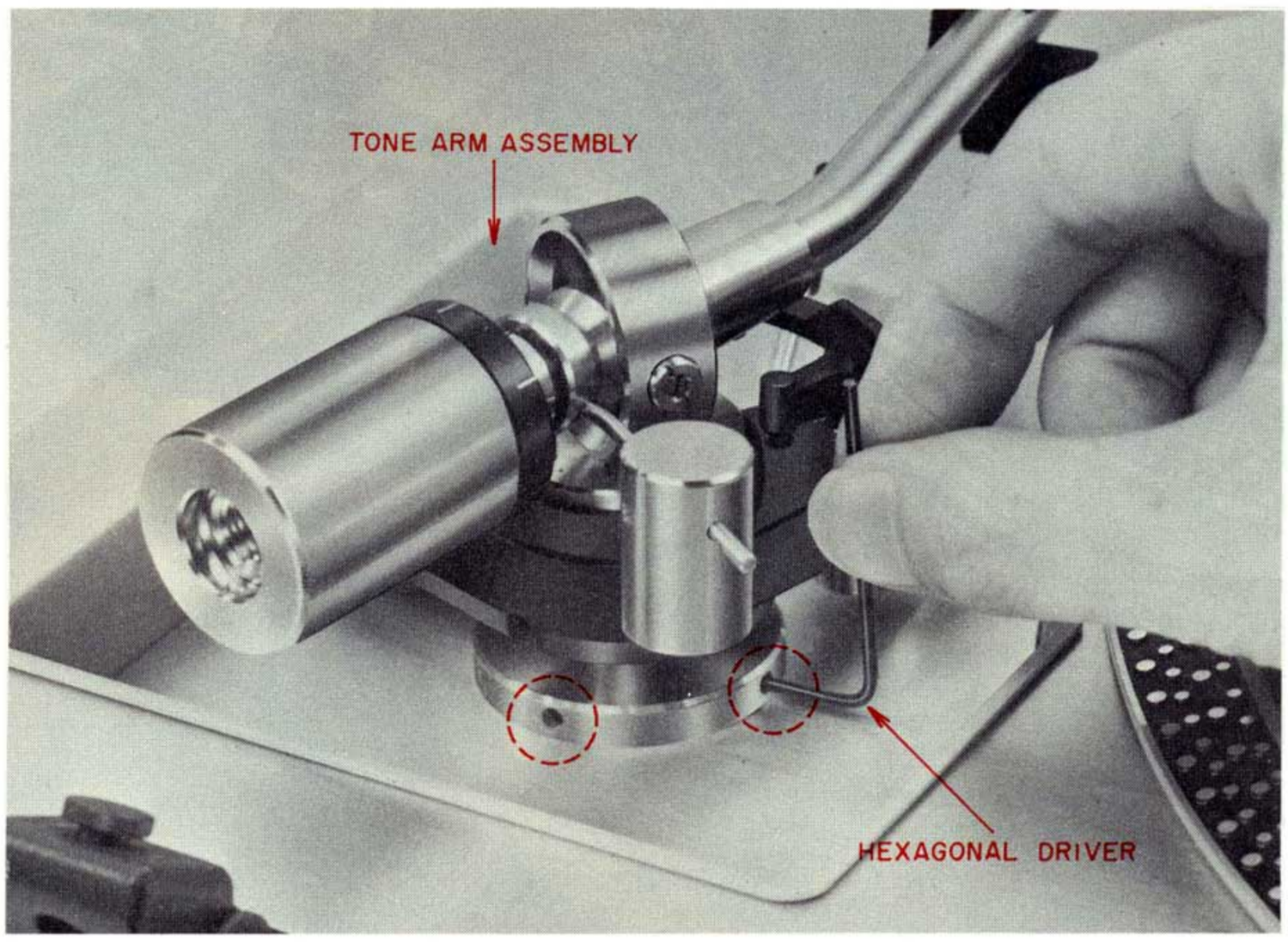

Fig. 5

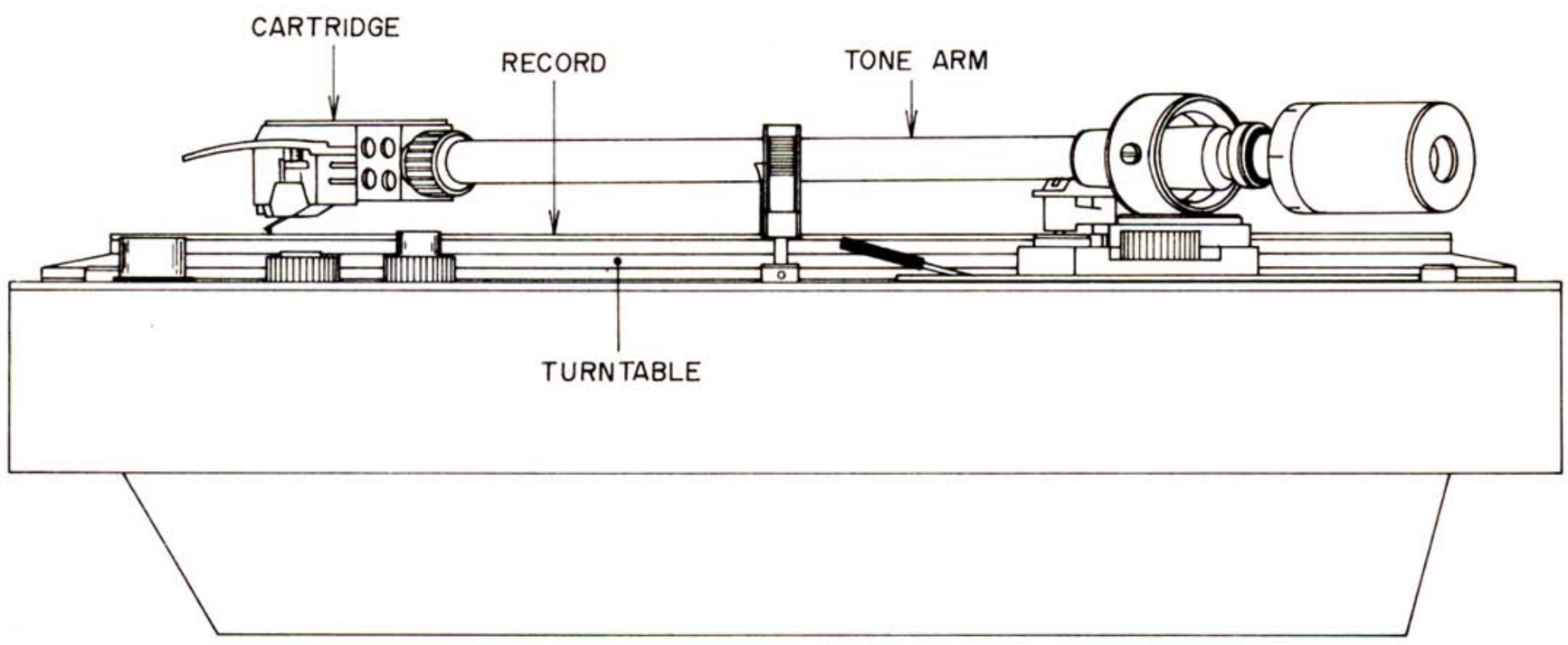

Fig. 6

3. TONE ARM HEIGHT ADJUSTMENT (Refer to Figs. 5 and 6)

Tone Arm Height is factory adjusted to 17.3 mm to accomodate Model APC-5 cartridge. This can be adjusted by +5, −3 mm according to the height of the cartridge being used. If Tone Arm Height Adjustment is necessary, this can be accomplished as follows:

1) Use a hexagonal driver as shown in Fig. 5 and loosen the two screws at the base of the tone arm assembly.
2) While playing a record, adjust tone arm height so that the tone arm is exactly horizontal as shown in Fig. 6 and tighten screw.

www.vinylengine.com

Fig. 7

4. TONE ARM REST HEIGHT ADJUSTMENT (Refer to Fig. 7)

1) As shown in Fig. 7, loosen arm rest fixation screw with a minus driver.
2) Adjust tone arm rest height so that the tone arm is exactly horizontal when it is on the arm rest, and tighten fixation screw.

www.vinylengine.com

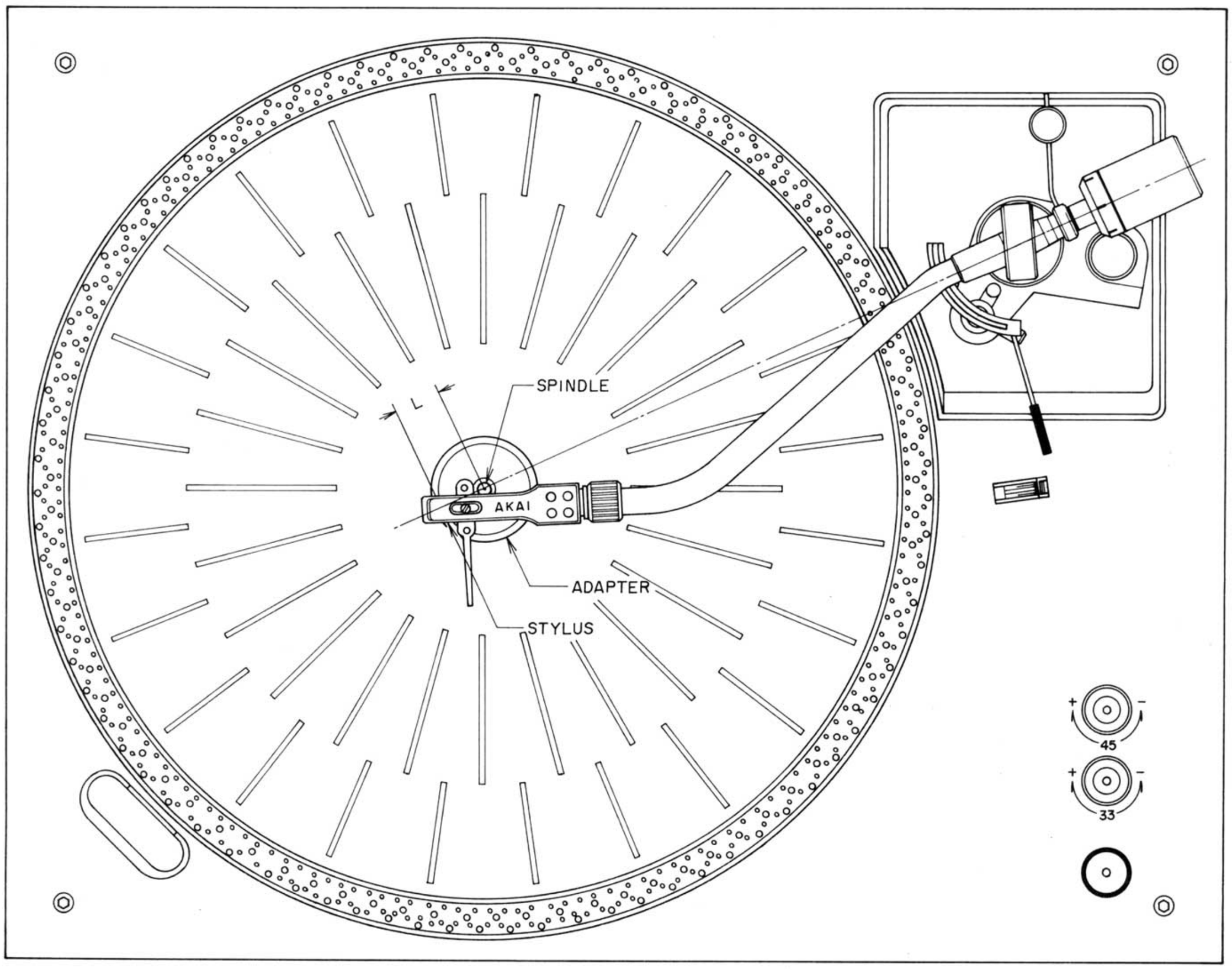

Fig. 8 Overhang Adjustment

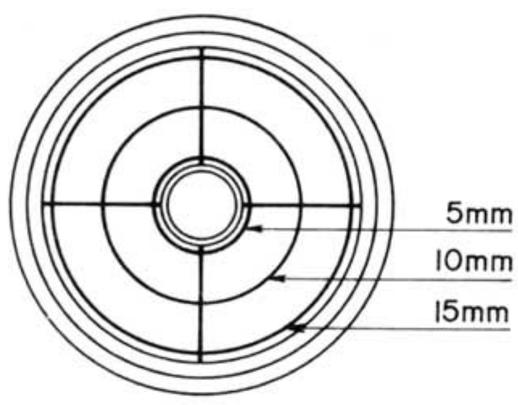

Fig. 9 45 rpm Adapter

5. OVERHANG ADJUSTMENT (Refer to Figs. 8 and 9)

A 45 rpm Adapter is supplied with your turntable for use when playing 45 rpm speed discs with a large center hole. Place the adapter on the turntable spindle. This adapter is also used for obtaining proper overhang when a cartridge is installed. The overhang is determined by the distance between the stylus and turntable spindle when the Tone Arm is moved to the center of the turntable. Correct overhang for the AP-006 is 15 mm. The stylus should be even with the 15 mm groove.

www.vinylengine.com

V. TROUBLE SHOOTING CHART

NOTE: For confirmation that wiring, parts, and polarities are in order.

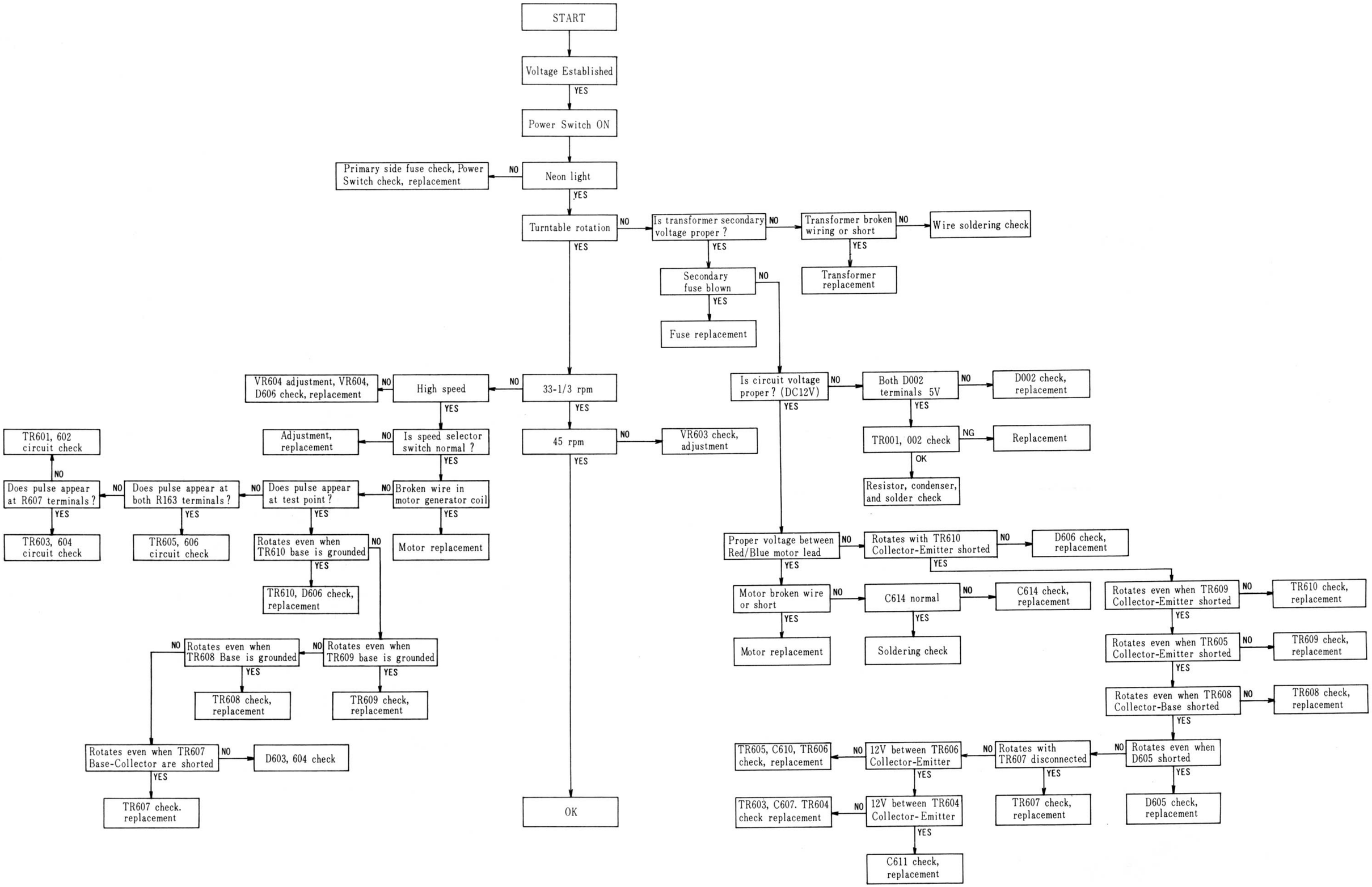

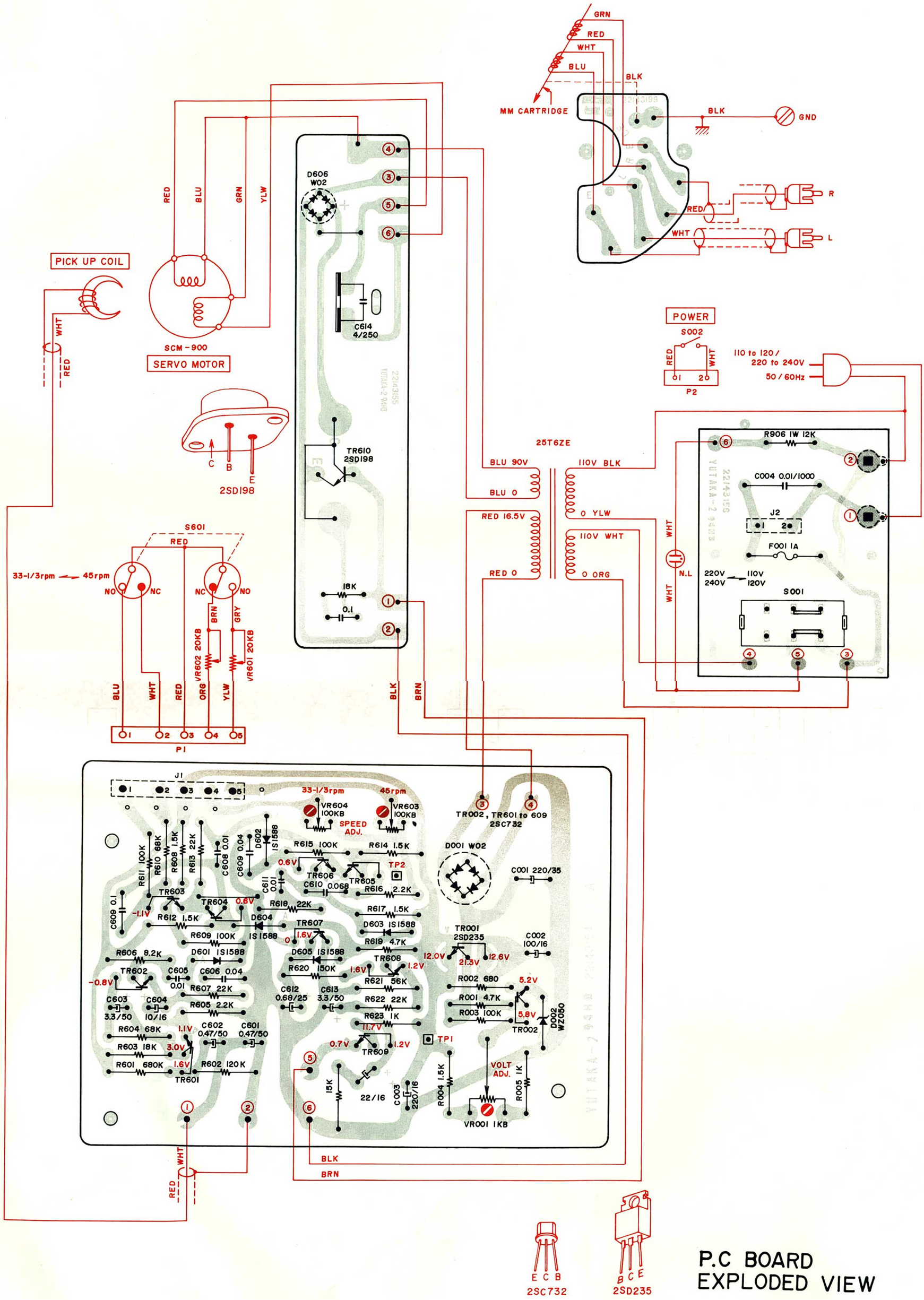

P.C BOARD
EXPLODED VIEW

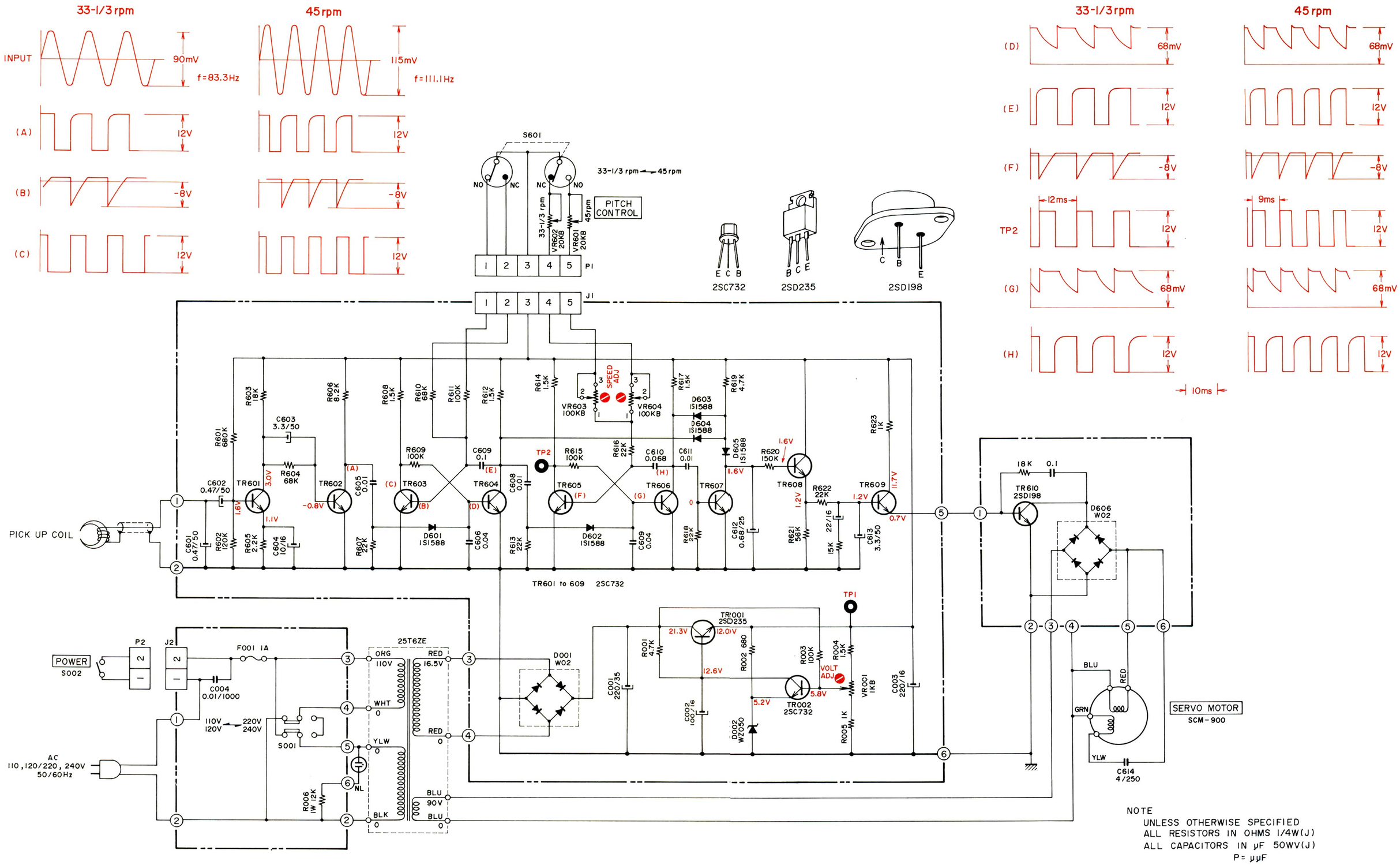

NOTE
UNLESS OTHERWISE SPECIFIED
ALL RESISTORS IN OHMS 1/4W(J)
ALL CAPACITORS IN μF 50WV(J)
P = μμF

AP-006
SCHEMATIC DIAGRAM
NO. 1540442A