AM-M630
AM-M830

AKAI SERVICE MANUAL

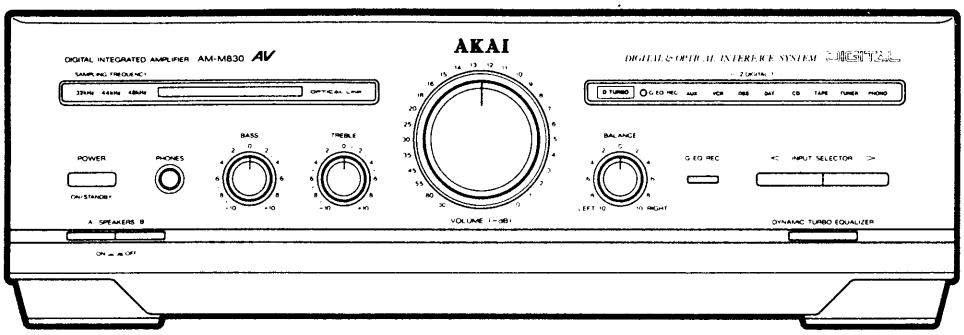

MODEL AM-M830

DIGITAL INTEGRATED AMPLIFIER

MODEL AM-M630
MODEL AM-M830

SPECIFICATIONS

	AM-M830	AM-M630
Power output		
FTC	54 W x 2 (6 ohms, 40 Hz to 20 kHz, THD 0.5 %)	42 W x 2 (6 ohms, 40 Hz to 20 kHz, THD 0.5 %)
DIN	63 W x 2 (6 ohms)	50 W x 2 (6 ohms)
EIAJ	80 W x 2 (6 ohms)	65 W x 2 (6 ohms)
Music	300 W	220 W
PMPO	900 W	750 W
Power bandwidth	10 Hz to 50 kHz (THD 0.1 %)	10 Hz to 50 kHz (THD 0.1 %)
Total harmonic distortion	0.06 % (1 kHz)	0.06 % (1 kHz)
Phono max. input level	55 mV (1kHz)	55 mV (1 kHz)
Frequency response	10 Hz to 100 kHz (−1.5 dB, −6.0 dB)	10 Hz to 100 kHz (−1.5 dB, −6.0 dB)
Tone control		
Treble	±8.0 dB (10 kHz)	±8.0 dB (10 kHz)
Bass	±8.0 dB (100 Hz)	®8.0 dB (100 Hz)
S / N ratio (IHF-A)		
PHONO (MM)	73 dB	72 dB
Others	88 dB	87 dB
Residual noise	0.5 mV	0.5 mV
Channel separation	60 dB (1 kHz)	60 dB (1 kHz)
Damping factor	19.3	20
Required speaker impedance		
A or B	6 to 16 ohms	6 to 16 ohms
A and B	12 to 16 ohms	——
Input sensitivity / impedance		
PHONO (MM)	2 mV / 47 kohms	2 mV / 47 kohms
VCR, etc.	270 mV / 47 kohms	180 mV / 47 kohms
Output level / impedance	270 mV / 1 kohms	180 mV / 1 kohms
[DAC section]		
Sampling frequency	32 / 44.1 / 48 kHz	44.1 KHz
Digital filter	8 fs / 18 bit	4 fs / 16 bit
D / A converter	18 bit / 2 DAC	16 bit / 2 DAC
Digital input level / impedance		
OPTICAL	−14 to −23 dBm	−14 to −23 dBm
COAXIAL	0.5 Vp-p / 75 ohms	——
Frequency response	20 Hz to 20 kHz ± 0.5 dB	20 Hz to 20 kHz ± 0.5 dB
Dynamic range	95 dB	93 dB
Total harmonic distortion	0.07 % (1 kHz, 20 kHz LPF)	0.04 % (1 kHz, 20 kHz LPF)
Power requirements	AC 220 V−230 V, 50 Hz for Europe except UK AC 240 V, 50Hz for UK and Australia AC 110 /120 / 220 / 240 V, 50 / 60 Hz convertible for other countries.	AC 220 V−230 V, 50 Hz for Europe except UK AC 240 V, 50Hz for UK and Australia AC 110 /120 / 220 / 240 V, 50 / 60 Hz convertible for other countries.
Dimensions	360 (W) x 117 (H) x 310 (D) mm	360 (W) x 117 (H) x 310 (D) mm
Weight	6.4 kg	6.3 kg

Standard accessories

Remote control unit (RC-S600)	1
Batteries	2
Operator's manual	1

* For improvement purposes, specifications and design are subject to change without notice.

★ SAFETY INSTRUCTIONS

PRECAUTIONS DURING SERVICING

1. Parts indentified by the ! (*) symbol are critical for safety. Replace only with parts number specified.
2. In addition to safety, other parts and assemblies are specified for conformance with such regulations as those applying to spurious radiation.
   These must also be replaced only with specified replacements.
   Examples: RF converters, tuner units, antenna selector switches, RF cables, noise blocking capacitors, noise blocking filters, etc.
3. Use specified internal wiring. Note especially:
   1) Wires covered with PVC tubing
   2) Double insulated wires
   3) High voltage leads
4. Use specified insulating materials for hazardous live parts. Note especially:
   1) Insulation Tape
   2) PVC tubing
   3) Spacers (Insulating barriers)
   4) Insulation sheets for transistors
   5) Plastic screws for fixing microswitch (especially in turntable)
5. When replacing AC primary side components (transformers, power cords, noise blocking capacitors, etc.), wrap ends of wires securely about the terminals before soldering.

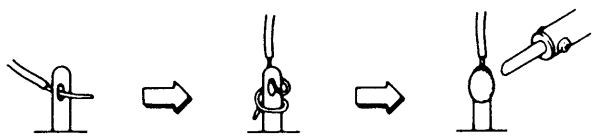

6. Observe that wires do not contact heat producing parts (heatsinks, oxide metal film resistors, fusible resistors, etc.).
7. Check that replaced wires do not contact sharp edged or pointed parts.
8. Also check areas surrounding repaired locations.
9. Use care that foreign objects (screws, solder droplets, etc.) do not remain inside the set.

SAFETY CHECK AFTER SERVICING

After servicing, make measurements of leakage-current or resistance in order to determine that exposed parts are acceptably insulated from the supply circuit.
The leakage-current measurement should be done between accessible metal parts (such as chassis, ground terminal, microphone jacks, signal input/output connectors, etc.) and the earth ground through a resister of 1500 ohms paralleled with a 0.15 μF capacitor, under the unit's normal working conditions. The leakage-current should be less than 0.5 mA rms AC.
The resistance measurement should be done between accessible exposed metal parts and power cord plug prongs with the power switch (if included) "ON". The resistance should be more than 2.2 Mohms.

MAKE YOUR CONTRIBUTION TO PROTECT THE ENVIRONMENT

Used batteries with the ISO symbol for recycling as well as small accumulators (rechargeable batteries), mini-batteries (cells) and starter batteries should not be thrown into the garbage can.

Please leave them at an appropriate depot. All other household batteries can be thrown out with the household waste.

★ INFORMATION

SYMBOLS FOR PRIMARY DESTINATION

Alphabet indicates the destination of the units as listed below.

Symbols	principal Destinations
B	UK
E	Europe (except UK)
S	Australia
V	Germany
U	Universal Area
Y*	Custom version

VOLTAGE CONVERSION (U model only)

Before connecting the power cord, set the VOLTAGE SELECTOR located on the rear panel so that the correct voltage for your area is indicated

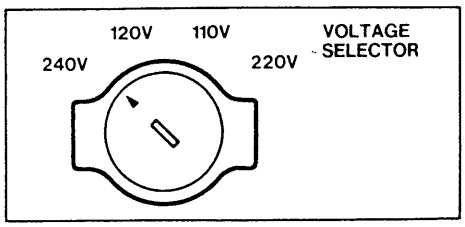

PRECAUTION BEFORE / AFTER REPAIRING THE UNIT

[ABOUT THE POWER SUPPLY]
Power supply of the AM-M630/M830 is controlled by the tuner. Therefore when repair of the AM-M630/M830 is necessary, repair should be made together with the tuner.
To repair the AM-M630/M830 without tuner, use the following procedure.

1) While pushing the G.E REC button, press the POWER button to turn the power of the AM-M630/M830 on.
2) To turn off the power of the AM-M630/M830, the AC power cord must be disconnected.

I. DISASSEMBLY

In case of trouble, etc., necessitating dismantling, please dismantle in the order shown in the illustrations. Reassemble in reverse order.

1. Removal of the UPPER COVER

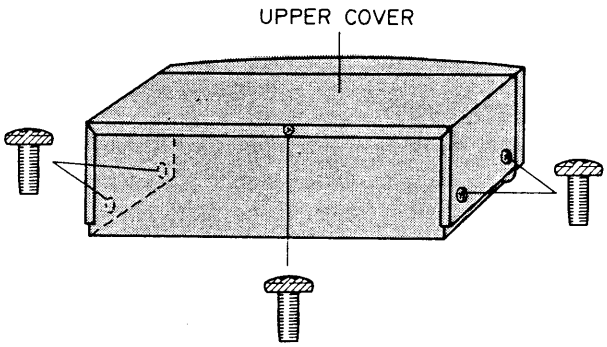

2. Removal of the FRONT PANEL

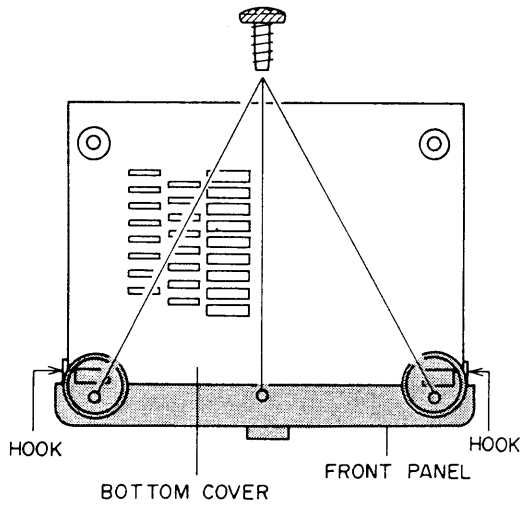

II. PRINCIPAL PARTS LOCATION

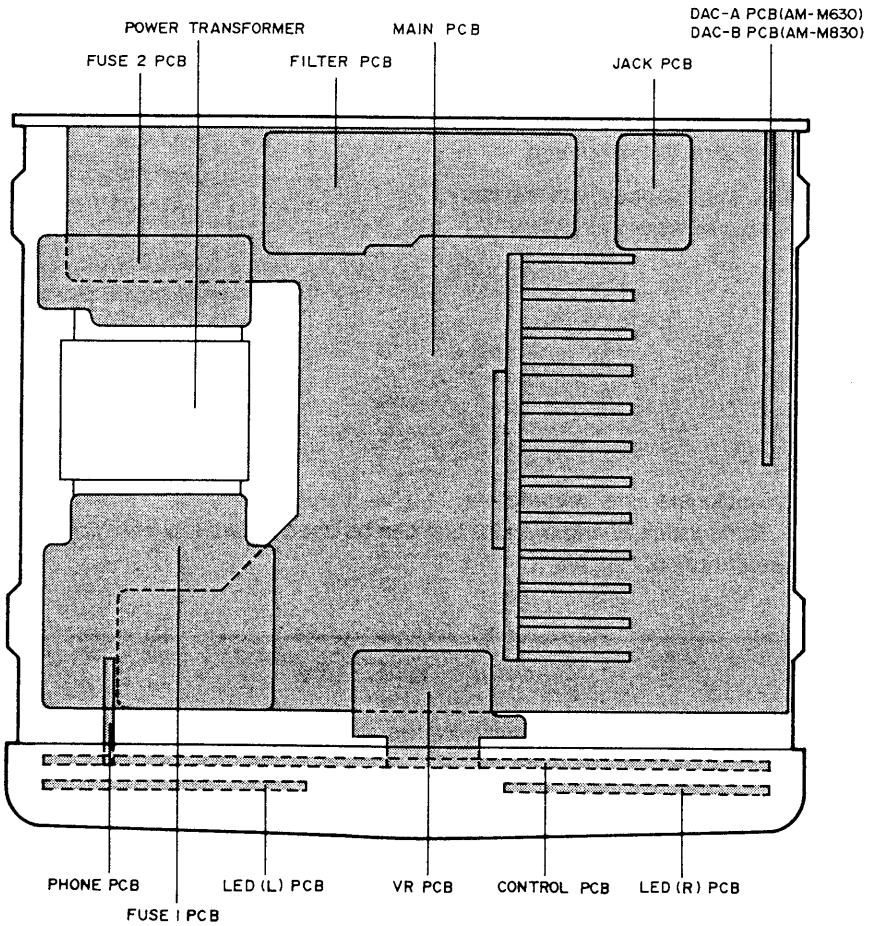

Fig. 2-1 Top view

III. PARTS LIST

ATTENTION

1. **When placing an order for parts, be sure to list Part No., Model No. and the description of eachpart. Otherwise, the non-delivery of the part or the delivery of a wrong part may result.**
2. **Please make sure that Part No. is correct when ordering. If not, a part different from the one you ordered may be delivered.**
3. **Since the parts shown in Parts List of Preliminary Service Manual may have been the subject of changes, please use this Parts List for all future reference.**

HOW TO USE THIS PARTS LIST

1. This Parts List lists those parts which are considered necessary for repairs. Other common parts, such as resistors and capacitors, are listed in the "Common List for Service Parts" from which these parts should be selected and stocked.
2. The Recommended Spare Parts List shows those parts in the Parts List which are considered particularly important for service.
3. Parts not shown in the Parts List and "Common List for Service Parts" will not in principle be supplied.
4. How to read the Parts List.

a) Mechanism Block

2. HEAD BASE BLOCK

Ref. No.	Part No.	Description
1	BH-T2023A320A	HEAD BASE BLOCK
2	HP-H2206A010A	HEAD R/P PR4-8FU C
3	ZS-477876	PAN20×03STL CMT
4	ZS-536488	BID20×08STL CMT
5	ZG-402895	SP CS ANGLE ADJUST

SP (Service Parts) Classification

This number corresponds with the individ ual parts index number in that figure.

b) PC Board

6. MAIN PC BOARD

Ref. No.	Part No.	Description
IC1	EI-324536	IC HD14049BP
IC2	EI-336801	IC MB8841-564M
C1A	EC-338399	C MMY V 223M 250AC [U,E,B,S]
C1B	EC-350949	C MMY V 223M 250DC [J]
C1C	EC-338397	C MMY V 223M 125AC [C,A]
X1	EI-318384	OSC X'TAL NC-18C

Symbols for primary destination

[A] : AAL (U.S.A) [S] : SAA (Australia)
[B] : BEAB (England) [U] : U/T (Universa Area)
[C] : CSA (Canada)
[E] : CEE (Europe) [V] : VDE (W. Germany)
[J] : JPN (Japan) [Y] : Custom Version

SP (Service Parts) Classification

These reference symbols correspond with component symbols in the Schematic Diagrams.

The available PC Board Blocks are listed separately.

5. When Part No. is known, Parts Index at end of Parts List can be used to locate where that part is shown in Parts List by its Reference No.listed at right of Part No.

WARNING

⚠ (*) INDICATES SAFETY CRITICAL COMPONENTS. FOR CONTINUED SAFETY, REPLACE SAFETY CRITICAL COMPONENTS ONLY WITH MANUFACTURE'S RECOMMENDED PARTS.

AVERTISSEMENT

⚠ (*) IL INDIQUE LES COMPOSANTS CRITIQUES DE SÉCURITÉ. POUR MAINTENIR LE DEGRÉ DE SÉCURITÉDE L'APPAREIL, NE REMPLACER QUE DES PIÉCES RECOMMANDEES PAR LÉ FABRICANT.

1. RECOMMENDED SPARE PARTS

We suggest you to stock the following Recommended Spare Part items listed below since they can cover most of the routine service.

Ref.No.	Part No.	Description
1	AX-401055M	REMOCON RC-S630
2	*BT-401082J	TRANS POW A2073 BS [B,S] [AM-M630]
3	*BT-401081J	TRANS POW A2073 EV [E,V] [AM-M630]
4	*BT-401080J	TRANS POW A2073 U [U] [AM-M630]
5	*BT-401086J	TRANS POW A2074 BS [B,S] [AM-M830]
6	*BT-401085J	TRANS POW A2074 EV [E,V] [AM-M830]
7	*BT-401083J	TRANS POW A2074 U [U] [AM-M830]
8	ED-403757J	D LED SEL2913 D1,D2 AMBER
9	ED-382365J	D LED SLR-34VC3F RED
10	ED-394416J	D LED SLV-31VT3F RED
11	ED-307572	D SILICON H 1SS131
12	ED-366684	D SILICON H 1SS136 F05
13	ED-394453J	D SILICON H 1SS92T-77 T26
14	*ED-394708J	D SILICON RBA402 200/4.0A [AM-M630]
15	*ED-384278J	D SILICON RBV602 200/6.0A [AM-M830]
16	*ED-389840J	D SILICON 1SR139-100HS F10
17	ED-394924J	D ZENER H HZS5C1
18	ED-397234J	D ZENER H HZS6A2
19	ED-346558	D ZENER H HZ12B1L [U]
20	ED-346627	D ZENER H HZ33 2
21	ED-346530	D ZENER H HZ6C3L
22	ED-346604	D ZENER H HZ7 B2
23	ED-346540	D ZENER H HZ9B1L
24	*EF-601301	FUSE SEMKO T 250V 2.00A [U]
25	*EF-623125	FUSE SEMKO T 250V 2.50A [AM-M630]
26	*EF-691007	FUSE SEMKO T 250V 3.15A [AM-M830]
27	*EF-690996	FUSE SEMKO T 250V 4.00A
28	*EF-668474	FUSE SEMKO T 250V 400MA
29	*EF-601942	FUSE SEMKO T 250V 630MA
30	*EF-258344	FUSE SEMKO T 250V 800MA
31	EI-367572	IC BA15218
32	EI-382660J	IC BA15218-DX
33	EI-373980	IC BA15218N
34	EI-400942J	IC LC6520C-4649 FX2AMP1
35	EI-401087J	IC LC78820
36	EI-393323J	IC M5218AL-771
37	EI-401056J	IC PD0029
38	EI-390594J	IC PD0052
39	EI-403229J	IC PD0060
40	*EI-358554	IC STK4152II [AM-M630]
41	*EI-366695	IC STK4172II [AM-M830]
42	EI-302233	IC TC4051BP
43	EI-332259	IC TC4052BP [AM-M830]
44	EI-200573	IC TC4053BP
45	EI-360040J1	IC TC74HCU04AP
46	EI-394518J	IC UPD6376CX
47	EI-719635	OSC CE KBR-4.19M 4.19MHZ
48	EJ-394459J	SOCKET OPTICAL GP1F32R
49	*EQ-394450J	RELAY POW DG12D1-O(M) 12V [U]
50	*ER-200746	R FUSE H ERD2FC 1/4W 1000G
51	*ER-332225	R FUSE H S10 ERD2FC 1/4W 56R0G
52	*ER-331188	R FUSE H S10 ERD2FC 1/4W 8R2J
53	ES-394512J	SW PUSH SPEA12 02-02N [AM-M830]
54	*ES-349070	SW SELECTOR YKS11-0002 02-4 [U] [SW901]
55	ES-394736J	SW TACT SOA-133HS
56	ET-356336	TR DTA114ES [U]
57	ET-363953	TR DTA114TS
58	ET-369248	TR DTA114YS
59	ET-373382	TR DTA143ZS
60	ET-354365	TR DTC114YS
61	ET-373485	TR DTC123JS
62	ET-354371	TR DTC124ES
63	ET-373392	TR DTC124XS
64	ET-354364	TR DTC143TS
65	ET-373391	TR DTC143ZS
66	ET-354414	TR DTC144ES
67	ET-749377	TR 2SA1048 GR
68	ET-394555J	TR 2SA1515 Q,R
69	ET-366365	TR 2SB1185 E,F [U]
70	ET-373210	TR 2SB1187 E,F
71	ET-749375	TR 2SC2458 GR
72	ET-380685J	TR 2SD1761 E,F,G
73	ET-373025	TR 2SD1944 J1,J2,K
74	ET-401091J	TR 2SD2144S U,V,W T05
75	EV-401089J	VR ROTARY RK11K113 L=30 SP104
76	EV-401088J	VR ROTARY RK14K1230 L30 B103X2
77	EV-400827J	VR SPL RK16Y12MA B104X2

2. P.C BOARD

Ref.No.	Part No.	Description
1A	BA-A2068A020G	PC(#) MAIN AMP BLK AM-M630(U) [U] [AM-M630]
1B	BA-A2068A020H	PC(#) MAIN AMP BLK AM-M630(E) [E] [AM-M630]
1C	BA-A2068A020J	PC(#) MAIN AMP BLK AM-M630(V) [V] [AM-M630]
1D	BA-A2068A020K	PC(#) MAIN AMP BLK AM-M830(U) [U] [AM-M830]
1E	BA-A2068A020L	PC(#) MAIN AMP BLK AM-M830(E) [E] [AM-M830]
1F	BA-A2068A020M	PC(#) MAIN AMP BLK AM-M830(V) [V] [AM-M830]
2A	BA-A2068A040C	PC DAC-A BLK AM-M630(U) [U] [AM-M630]
2B	BA-A2068A040D	PC DAC-A BLK AM-M630(V) [V] [AM-M630]
2C	BA-A2074A040A	PC DAC-B BLK AM-M830(U) [U] [AM-M830]
2D	BA-A2074A040B	PC DAC-B BLK AM-M830(V) [V] [AM-M830]
3A	BA-A2073A030A	PC(#)CONTROL BLK AM-M630(U) [U] [AM-M630]
3B	BA-A2073A030B	PC(#)CONTROL BLK AM-M630(V) [V] [AM-M630]
3C	BA-A2073A030C	PC(#)CONTROL BLK AM-M830(U) [U] [AM-M830]
3D	BA-A2073A030D	PC(#)CONTROL BLK AM-M830(V) [V] [AM-M830]

PC (#) MAIN AMP BLK CONSISTS OF FOLLOWING P.C BOARD.

- MAIN AMP P.C BOARD
- JACK P.C BOARD
- FILTER P.C BOARD
- FUSE-1 P.C BOARD
- FUSE-2 P.C BOARD

PC (#) CONTROL BLK CONSISTS OF FOLLOWING P.C BOARD.

- CONTROL P.C BOARD
- VR P.C BOARD
- LED (L) P.C BOARD
- LED (R) P.C BOARD
- PHONE P.C BOARD

3. MAIN AMP P.C BOARD

Ref.No.	Part No.	Description
C115A	EC-394535J	C EC V CUT SME 332M 40.0DC [AM-M630]
C115B	EC-394534J	C EC V CUT SME 472M 50.0DC [AM-M830]
C116A	EC-394535J	C EC V CUT SME 332M 40.0DC [AM-M630]
C116B	EC-394534J	C EC V CUT SME 472M 50.0DC [AM-M830]
D1	ED-394453J	D SILICON H 1SS92T-77 T26
D2	ED-346604	D ZENER H HZ7 B2
D101	*ED-389840J	D SILICON 1SR139-100HS F10
D102	*ED-389840J	D SILICON 1SR139-100HS F10
D103	*ED-389840J	D SILICON 1SR139-100HS F10
D104	*ED-389840J	D SILICON 1SR139-100HS F10
D105	ED-346540	D ZENER H HZ9B1L
D106	ED-346540	D ZENER H HZ9B1L
D109	*ED-389840J	D SILICON 1SR139-100HS F10
D110	*ED-389840J	D SILICON 1SR139-100HS F10
D111	*ED-389840J	D SILICON 1SR139-100HS F10
D112	*ED-389840J	D SILICON 1SR139-100HS F10
D113	ED-346530	D ZENER H HZ6C3L
D115	*ED-389840J	D SILICON 1SR139-100HS F10
D116	*ED-389840J	D SILICON 1SR139-100HS F10
D117	*ED-389840J	D SILICON 1SR139-100HS F10
D118	*ED-389840J	D SILICON 1SR139-100HS F10
D119	*ED-389840J	D SILICON 1SR139-100HS F10
D120	*ED-389840J	D SILICON 1SR139-100HS F10
D121	ED-346627	D ZENER H HZ33 2
D122	ED-346540	D ZENER H HZ9B1L
D123A	*ED-394708J	D SILICON RBA402 200/4.0A [AM-M630]
D123B	*ED-384278J	D SILICON RBV602 200/6.0A [AM-M830]
D124	ED-346530	D ZENER H HZ6C3L
D125	ED-346540	D ZENER H HZ9B1L
F101A	*EF-623125	FUSE SEMKO T 250V 2.50A [AM-M630]
F101B	*EF-691007	FUSE SEMKO T 250V 3.15A [AM-M830]
FR1	*ER-200746	R FUSE H ERD2FC 1/4W 1000G
FR2	*ER-200746	R FUSE H ERD2FC 1/4W 1000G
FR101	*ER-331188	R FUSE H S10 ERD2FC 1/4W 8R2J
FR102	*ER-332225	R FUSE H S10 ERD2FC 1/4W 56R0G
IC1	EI-382660J	IC BA15218-DX
IC2	EI-302233	IC TC4051BP
IC3	EI-302233	IC TC4051BP
IC4	EI-200573	IC TC4053BP
IC5	EI-200573	IC TC4053BP
IC6	EI-367572	IC BA15218
IC7	EI-367572	IC BA15218 [AM-M830]
IC8	EI-332259	IC TC4052BP [AM-M830]
IC101A	*EI-358554	IC STK4152II [AM-M630]
IC101B	*EI-366695	IC STK4172II [AM-M830]
J1A	EJ-394438J	PIN J YKC21-3050 SEALED 6P [U,E]
J1B	EJ-394437J	PIN J YKC21-3036 6P [V]
J2A	EJ-394436J	PIN J YKC21-3034 4P [AM-M630]
J2B	EJ-394437J	PIN J YKC21-3036 6P [AM-M830]
J3	EJ-394819J	SOCKET 52303-1511 15P
J4	EJ-394442J	SOCKET 52303-1211 12P
L101	EO-394520J	COIL FIX 2 *0708-1197
R110	ER-333023	R OMF H S20 FS 2W 100J
R111	ER-333023	R OMF H S20 FS 2W 100J
TM1A	EJ-349417	TERMINAL LEVER YKD21-0026 4P [AM-M630]
TM1B	EJ-349401	TERMINAL LEVER YKD21-0027 8P [AM-M830]
TR1	ET-401091J	TR 2SD2144S U,V,W T05
TR2	ET-401091J	TR 2SD2144S U,V,W T05
TR4	ET-369248	TR DTA114YS
TR5	ET-373392	TR DTC124XS
TR6	ET-354371	TR DTC124ES
TR101	ET-354371	TR DTC124ES
TR102	ET-380685J	TR 2SD1761 E,F,G
TR103	ET-373210	TR 2SB1187 E,F
TR104	ET-373025	TR 2SD1944 J1,J2,K
TR105	ET-373210	TR 2SB1187 E,F
TR106	ET-749377	TR 2SA1048 GR

4. DAC-A P.C BOARD (AM-M630)

Ref.No.	Part No.	Description
D1	ED-307572	D SILICON H 1SS131
D2	ED-307572	D SILICON H 1SS131
D3	ED-397234J	D ZENER H HZS6A2
D4	ED-307572	D SILICON H 1SS131
D5	ED-307572	D SILICON H 1SS131
FL1	EH-386589J	FILTER EMI FBA04HA600AB-00 T26 [V]
FL2	EH-386589J	FILTER EMI FBA04HA600AB-00 T26 [V]
FL3	EH-386589J	FILTER EMI FBA04HA600AB-00 T26 [V]
FL4	EH-395074J	FILTER EMI FBA04HA600VB-00 T05 [V]
IC1	EI-390594J	IC PD0052
IC2	EI-401056J	IC PD0029
IC3	EI-394518J	IC UPD6376CX
IC4	EI-393323J	IC M5218AL-771
J1	EJ-394459J	SOCKET OPTICAL GP1F32R
TR1	ET-749375	TR 2SC2458 GR
TR2	ET-373392	TR DTC124XS
TR3	ET-369248	TR DTA114YS
TR4	ET-373391	TR DTC143ZS
TR5	ET-369248	TR DTA114YS
TR6	ET-373391	TR DTC143ZS
TR7	ET-394555J	TR 2SA1515 Q,R
TR8	ET-749375	TR 2SC2458 GR
TR9	ET-749375	TR 2SC2458 GR
TR10	ET-749375	TR 2SC2458 GR
TR11	ET-749375	TR 2SC2458 GR
TR12	ET-373485	TR DTC123JS
TR13	ET-354414	TR DTC144ES
TR14	ET-373485	TR DTC123JS

5. DAC-B P.C BOARD (AM-M830)

Ref.No.	Part No.	Description
D201	ED-307572	D SILICON H 1SS131
D301	ED-394924J	D ZENER H HZS5C1
D481	ED-307572	D SILICON H 1SS131
D482	ED-307572	D SILICON H 1SS131
FL601	EH-386589J	FILTER EMI FBA04HA600AB-00 T26 [V]
FL602	EH-386589J	FILTER EMI FBA04HA600AB-00 T26 [V]
FL603	EH-386589J	FILTER EMI FBA04HA600AB-00 T26 [V]
FL604	EH-395074J	FILTER EMI FBA04HA600VB-00 T05 [V]
IC101	EI-360040J1	IC TC74HCU04AP
IC201	EI-390594J	IC PD0052
IC301	EI-403229J	IC PD0060
IC302	EI-401087J	IC LC78820
IC401	EI-393323J	IC M5218AL-771
IC402	EI-393323J	IC M5218AL-771
J101	EJ-394459J	SOCKET OPTICAL GP1F32R
J102A	EJ-390593J	PIN J *A2076-2 3P [U]
J102B	EJ-394461J	PIN J *A2076-1 3P [V]
T101	BT-368261	TRANS PULSE TC-1027-04
TR301	ET-354414	TR DTC144ES
TR401	ET-354364	TR DTC143TS
TR402	ET-749375	TR 2SC2458 GR
TR451	ET-354364	TR DTC143TS
TR452	ET-749375	TR 2SC2458 GR
TR481	ET-354365	TR DTC114YS
TR482	ET-373382	TR DTA143ZS
TR483	ET-373392	TR DTC124XS
TR484	ET-369248	TR DTA114YS

6. CONTROL P.C BOARD

Ref.No.	Part No.	Description
D181	ED-307572	D SILICON H 1SS131
D182	ED-307572	D SILICON H 1SS131
D201	ED-307572	D SILICON H 1SS131
D202	ED-307572	D SILICON H 1SS131
D203	ED-307572	D SILICON H 1SS131
D204	ED-307572	D SILICON H 1SS131
IC101	EI-373980	IC BA15218N
IC102	EI-373980	IC BA15218N
IC201	EI-400942J	IC LC6520C-4649 FX2AMP1
SW301	ES-394512J	SW PUSH SPEA12 02-02N [AM-M830]
SW302	ES-394512J	SW PUSH SPEA12 02-02N [AM-M830]
TR101	ET-401091J	TR 2SD2144S U,V,W T05
TR151	ET-401091J	TR 2SD2144S U,V,W T05
TR181	ET-354365	TR DTC114YS
TR182	ET-373392	TR DTC124XS
TR183	ET-369248	TR DTA114YS
TR201	ET-354365	TR DTC114YS
TR202	ET-354365	TR DTC114YS
TR203	ET-354365	TR DTC114YS
TR204	ET-749377	TR 2SA1048 GR
TR205	ET-363953	TR DTA114TS
TR206	ET-363953	TR DTA114TS
TR207	ET-363953	TR DTA114TS
TR208	ET-363953	TR DTA114TS
TR209	ET-749375	TR 2SC2458 GR
TR210	ET-373391	TR DTC143ZS [AM-M830]
TR211	ET-354365	TR DTC114YS
TR212	ET-354414	TR DTC144ES
TS201	ES-394736J	SW TACT SOA-133HS
TS202	ES-394736J	SW TACT SOA-133HS
TS203	ES-394736J	SW TACT SOA-133HS
TS204	ES-394736J	SW TACT SOA-133HS
TS205	ES-394736J	SW TACT SOA-133HS [AM-M830]
VR101	EV-401088J	VR ROTARY RK14K1230 L30 B103X2
VR102	EV-401088J	VR ROTARY RK14K1230 L30 B103X2
VR103	EV-401089J	VR ROTARY RK11K113 L=30 SP104
X201	EI-719635	OSC CE KBR-4.19M 4.19MHZ

7. VR P.C BOARD

Ref.No.	Part No.	Description
D401	ED-366684	D SILICON H 1SS136 F05
TR401	ET-749377	TR 2SA1048 GR
TR402	ET-749377	TR 2SA1048 GR
TR403	ET-749375	TR 2SC2458 GR
TR404	ET-749375	TR 2SC2458 GR
VR401	EV-400827J	VR SPL RK16Y12MA B104X2

8. LED (L) P.C BOARD

Ref.No.	Part No.	Description
D501	ED-394416J	D LED SLV-31VT3F RED
D502	ED-394416J	D LED SLV-31VT3F RED
D503	ED-394416J	D LED SLV-31VT3F RED
D504	ED-394416J	D LED SLV-31VT3F RED
D505	ED-403757J	D LED SEL2913 D1,D2 AMBER
D506	ED-403757J	D LED SEL2913 D1,D2 AMBER
D507	ED-403757J	D LED SEL2913 D1,D2 AMBER [AM-M830]
D508	ED-403757J	D LED SEL2913 D1,D2 AMBER [AM-M830]
D509	ED-403757J	D LED SEL2913 D1,D2 AMBER [AM-M830]

9. LED (R) P.C BOARD

Ref.No.	Part No.	Description
D601	ED-403757J	D LED SEL2913 D1,D2 AMBER [AM-M830]
D602	ED-403757J	D LED SEL2913 D1,D2 AMBER [AM-M830]
D603	ED-382365J	D LED SLR-34VC3F RED
D604	ED-403757J	D LED SEL2913 D1,D2 AMBER [AM-M830]
D605	ED-403757J	D LED SEL2913 D1,D2 AMBER [AM-M830]
D606	ED-403757J	D LED SEL2913 D1,D2 AMBER [AM-M830]
D607	ED-403757J	D LED SEL2913 D1,D2 AMBER
D608	ED-403757J	D LED SEL2913 D1,D2 AMBER
D609	ED-403757J	D LED SEL2913 D1,D2 AMBER
D610	ED-403757J	D LED SEL2913 D1,D2 AMBER
D611	ED-403757J	D LED SEL2913 D1,D2 AMBER

10. PHONE P.C BOARD

Ref.No.	Part No.	Description
J701A	EJ-394455J	PHONE J 3P YKB21-5006 6.3 [AM-M630]
J701B	EJ-355011	PHONE J 3P YKB21-5010 6.3 [AM-M830]
R701	ER-325843	R OMF H S15 FS 1W 391J
R751	ER-325843	R OMF H S15 FS 1W 391J

11. JACK P.C BOARD

Ref.No.	Part No.	Description
J201	EJ-394445J	SOCKET 52303-1411 14P

12. FILTER P.C BOARD

Ref.No.	Part No.	Description
C301	*EC-320548	C CE V F 103Z 250AC [U]
D301	ED-346558	D ZENER H HZ12B1L [U]
D302	ED-307572	D SILICON H 1SS131 [U]
D303	ED-307572	D SILICON H 1SS131 [U]
D304	ED-307572	D SILICON H 1SS131 [U]
F301	*EF-601301	FUSE SEMKO T 250V 2.00A [U]
F302	*EF-601301	FUSE SEMKO T 250V 2.00A [U]
J301	*EJ-384277J	SOCKET OUTLET M7037 2P [U]
L301	*EO-338409	COIL LF FKOB160MH02 250UH
RL301	*EQ-394450J	RELAY POW DG12D1-O(M) 12V [U]
TR301	ET-356336	TR DTA114ES [U]
TR302	ET-354371	TR DTC124ES [U]
TR303	ET-749375	TR 2SC2458 GR [U]
TR304	ET-366365	TR 2SB1185 E,F [U]

13. FUSE-1 P.C BOARD

Ref.No.	Part No.	Description
F401	*EF-690996	FUSE SEMKO T 250V 4.00A
F402	*EF-690996	FUSE SEMKO T 250V 4.00A
F403	*EF-668474	FUSE SEMKO T 250V 400MA
F404	*EF-668474	FUSE SEMKO T 250V 400MA
F405	*EF-601942	FUSE SEMKO T 250V 630MA

14. FUSE-2 P.C BOARD

Ref.No.	Part No.	Description
F406	*EF-258344	FUSE SEMKO T 250V 800MA
F407	*EF-258344	FUSE SEMKO T 250V 800MA
F408	*EF-601301	FUSE SEMKO T 250V 2.00A

15. FINAL ASSEMBLY

Ref.No.	Part No.	Description
1A	BD-A2073A050A	PANEL FRONT BLK AM-M630-B
1B	BD-A2073A050B	PANEL FRONT BLK AM-M830-B
2	SK-401821M	BUTTON POWER
3A	SK-401822M	BUTTON OPERATION-A [AM-M630]
3B	SK-401823M	BUTTON OPERATION-B [AM-M830]
5	SE-394119M	LENS OPTICAL
6	SK-401824M	BUTTON SP(L) [AM-M830]
7	SK-401825M	BUTTON SP(R) [AM-M830]
8	SK-401829M	KNOB VR
9	SK-401830M	KNOB TONE
11	SZ-401762M	RING FOOT
13	SA-394136M	CUSHION FOOT
14	SA-394127M1	FOOT REAR
15A	SP-401812M	PANEL REAR AM-M630(U)
15B	SP-401813M	PANEL REAR AM-M630(E)
15C	SP-401814M	PANEL REAR AM-M630(V)
15D	SP-401816M	PANEL REAR AM-M630(B)
15E	SP-401817M	PANEL REAR AM-M830(U)
15F	SP-401818M	PANEL REAR AM-M830(E)
15G	SP-401819M	PANEL REAR AM-M830(V)
15H	SP-401820M	PANEL REAR AM-M830(B)
16	EJ-394538J	TERMINAL W/S 0033-208-0-00
17	*ES-349070	SW SELECTOR YKS11-0002 02-4 [U] [SW901]
18	SP-394094M	COVER UPPER AM
19	EJ-394657J	PLUG SHORT-PIN CNT31-0074
20A	*BT-401080J	TRANS POW A2073 U [U] [AM-M630]
20B	*BT-401081J	TRANS POW A2073 EV [E,V] [AM-M630]
20C	*BT-401082J	TRANS POW A2073 BS [B,S] [AM-M630]
20D	*BT-401083J	TRANS POW A2074 U [U] [AM-M830]
20E	*BT-401085J	TRANS POW A2074 EV [E,V] [AM-M830]
20F	*BT-401086J	TRANS POW A2074 BS [B,S] [AM-M830]
21A	*EW-374894	AC CORD 2C VM-0129A,VFF U/T [U]
21B	*EW-347897	AC CORD 2 CORES VM0364,LCFL EV [E,V]
21C	*EW-346249	AC CORD 2 CORES LCFL2X0.75 B [B]
21D	*EW-347898	AC CORD 2 CORES VM-0436,LCFL S [S]
22	*EZ-371605	BUSH CORD 2271
23	ZS-387983J	ST BID30X08STL BNI EARTH LOCK
24	ZS-331182	BT BID30X08STL BNI
25	ZS-346742	ST BID40X08STL CMT CUP

16. ACCESSARY

Ref.No.	Part No.	Description
1	AX-401055M	REMOCON RC-S630

FINAL ASSEMBLY

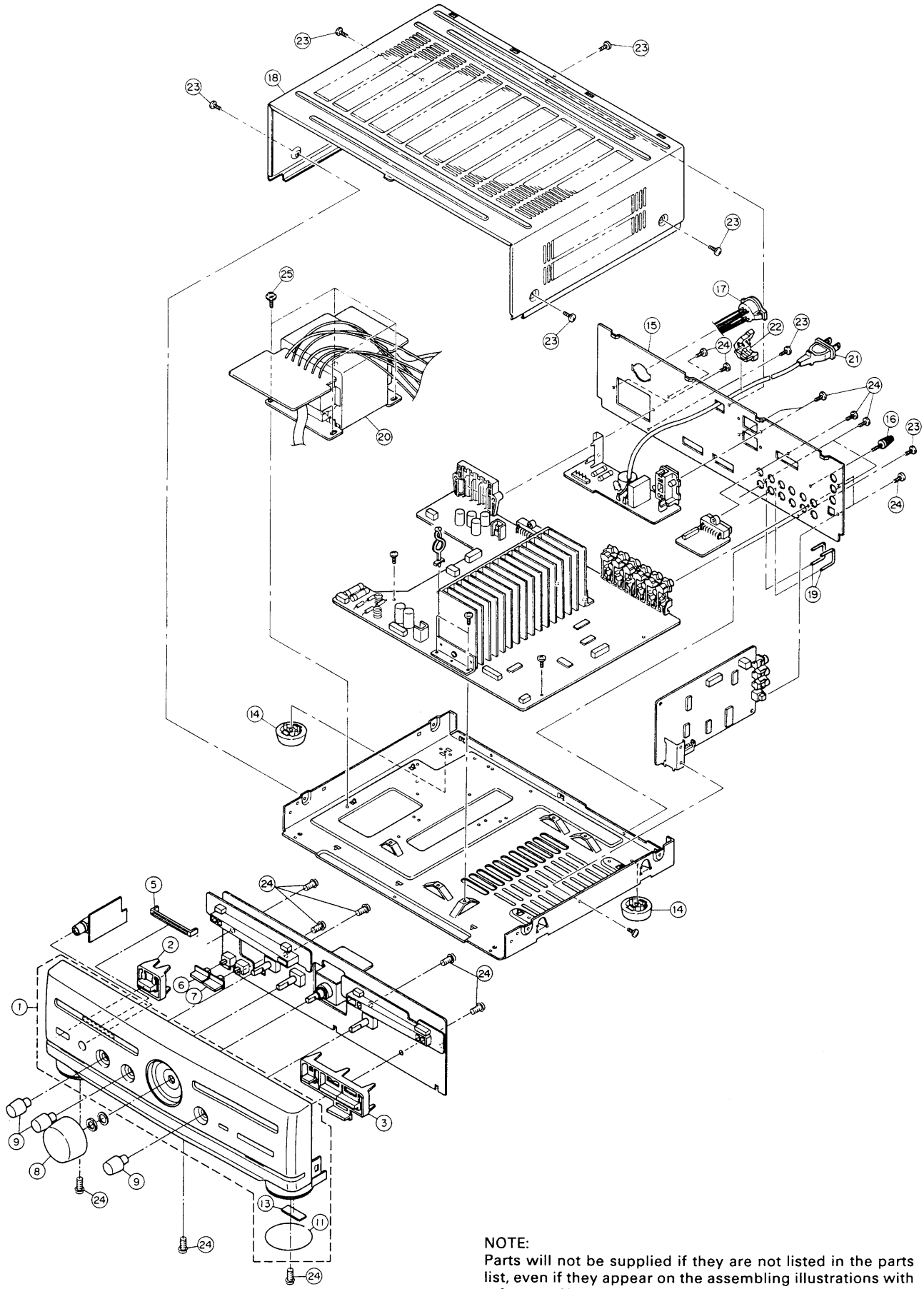

NOTE:
Parts will not be supplied if they are not listed in the parts list, even if they appear on the assembling illustrations with reference No.

NOTE

ABBREVIATIONS (AMPLIFIER)

ABBREVIATION	EXPLANATION
A	Analog
AC	Alternating Current
AMP	AMPlifier
CD	Compact Disc
COM	COMmon
D	Digital
D/A	Digital to Analog
DAC	Digital to Analog Converter
DAT	Digital Audio Tape recorder
DC	Direct Current
GND	GrouND
L	Left
LED	Light Emitting Diode
MC	Moving Coil
MM	Moving Magnet
PCB	Printed Circuit Board
R	Right
REG	REGulator
REC	RECord
TR	TRansistor
SW	SWitch
V.AMP	Voltage AMPlifier
V.DISC	Video DISC
VR	Variable Resistance
VTR	Video Tape Recorder

AKAI

MODEL AM-M630
MODEL AM-M830

SCHEMATIC DIAGRAMS AND PC BOARDS

TABLE OF CONTENTS

1. BLOCK DIAGRAM 2
2. CONNECTION DIAGRAM 3
3. MAIN SCHEMATIC DIAGRAM 4
4. MAIN AND JACK PC BOARDS 5
5. CONTROL SCHEMATIC DIAGRAM 6
6. CONTROL AND OTHER PC BOARDS 7
7. AM-M630 DAC-A SCHEMATIC DIAGRAM 8
8. DAC-A PC BOARD 9
9. DAC-B PC BOARD 10
10. AM-M830 DAC-B SCHEMATIC DIAGRAM 11
11. INFORMATION OF ICs 12

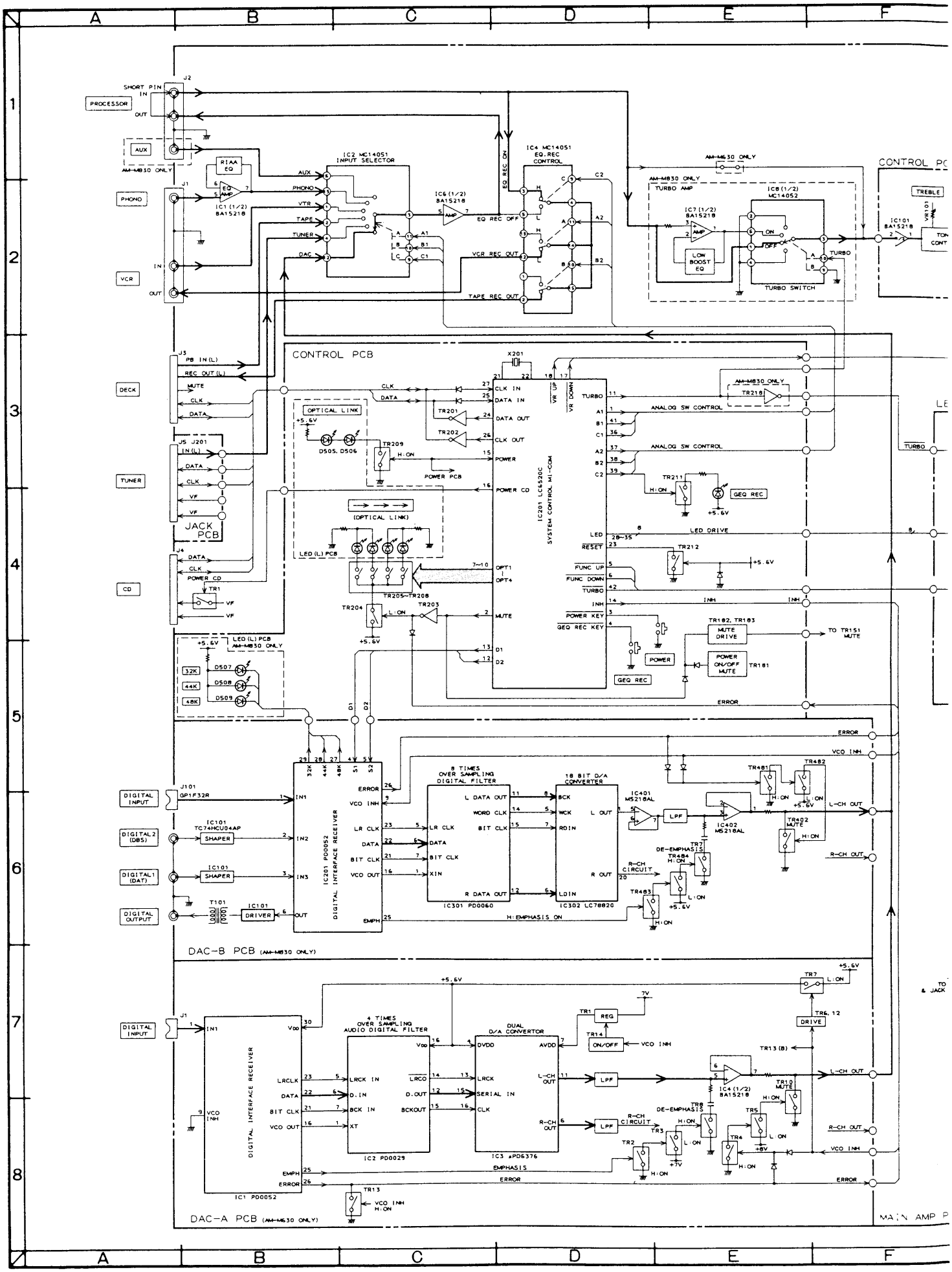
CONTROL PCB
DAC-B PCB (AM-M830 ONLY)
DAC-A PCB (AM-M630 ONLY)
JACK PCB
PROCESSOR
AUX
PHONO
VCR
DECK
TUNER
CD
DIGITAL INPUT
DIGITAL2 (DBS)
DIGITAL1 (DAT)
DIGITAL OUTPUT
IC2 MC14051 INPUT SELECTOR
IC4 MC14051 EQ.REC CONTROL
IC1 (1/2) BA15218
IC6 (1/2) BA15218
IC7 (1/2) BA15218
IC8 (1/2) MC14052
IC101 BA15218
IC201 LC6520C SYSTEM CONTROL HI-COM
IC301 PD0060
IC302 LC78820
IC401 MS218AL
IC402 MS218AL
IC1 PD0052
IC2 PD0029
IC3 μPD6376
IC4 (1/2) BA15218
TURBO AMP
TURBO SWITCH
LOW BOOST EQ
OPTICAL LINK
LED (L) PCB
GEQ REC
POWER
MUTE DRIVE
POWER ON/OFF MUTE
DE-EMPHASIS
R-CH CIRCUIT
DRIVE
REG
ON/OFF
VCO INH
EMPHASIS
ERROR
L-CH OUT
R-CH OUT
TO TR151 MUTE
TO & JACK
MAIN AMP P

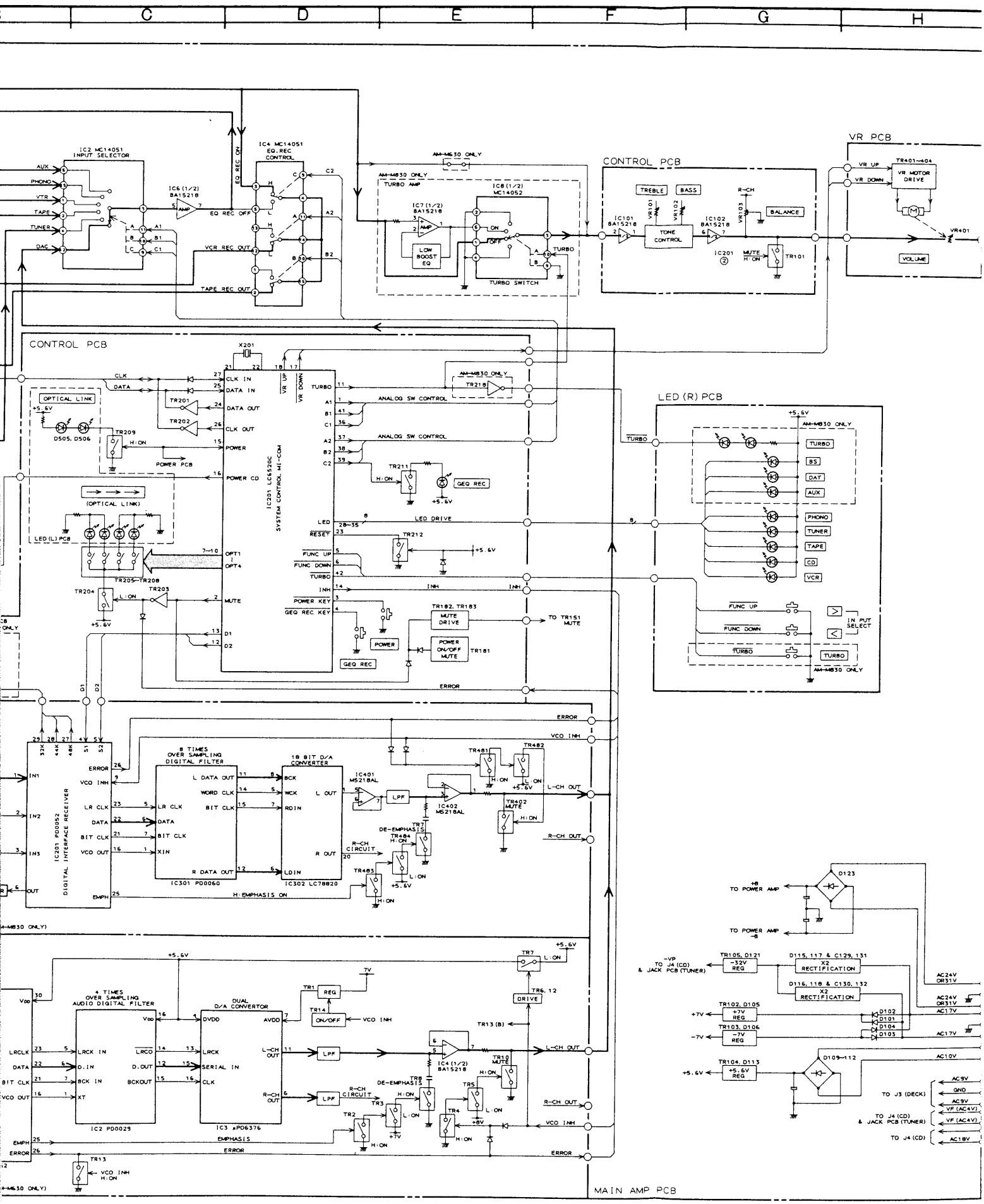
C
D
E
F
G
H
IC2 MC14051
INPUT SELECTOR
AUX
PHONO
VTR
TAPE
TUNER
DAC
IC6 (1/2)
BA15218
AMP
EQ REC OFF
EQ REC ON
IC4 MC14051
EQ. REC
CONTROL
VCR REC OUT
TAPE REC OUT
AM-M830 ONLY
TURBO AMP
IC7 (1/2)
BA15218
LOW
BOOST
EQ
IC8 (1/2)
MC14052
ON
OFF
TURBO
TURBO SWITCH
CONTROL PCB
TREBLE
BASS
R-CH
BALANCE
IC101
BA15218
TONE
CONTROL
IC102
BA15218
IC201
MUTE
H:ON
TR101
VR PCB
VR UP
VR DOWN
TR401~404
VR MOTOR
DRIVE
VR401
VOLUME
CONTROL PCB
X201
CLK
DATA
CLK IN
DATA IN
DATA OUT
CLK OUT
POWER
POWER CD
OPTICAL LINK
+5.6V
D505, D506
TR209
H:ON
POWER PCB
(OPTICAL LINK)
LED (L) PCB
OPT1
OPT4
TR205~TR208
TR204
L:ON
TR203
MUTE
D1
D2
IC201 LC6520C
SYSTEM CONTROL MI-COM
TURBO
A1
B1
C1
A2
B2
C2
ANALOG SW CONTROL
TR218
TR211
GEQ REC
LED
LED DRIVE
RESET
TR212
FUNC UP
FUNC DOWN
INH
POWER KEY
GEQ REC KEY
TR182, TR183
MUTE
DRIVE
TO TR151
MUTE
POWER
POWER
ON/OFF
MUTE
TR181
ERROR
LED (R) PCB
TURBO
BS
DAT
AUX
PHONO
TUNER
TAPE
CD
VCR
FUNC UP
FUNC DOWN
TURBO
IN PUT
SELECT
IC201 PD0052
DIGITAL INTERFACE RECEIVER
33K
44K
48K
S1
S2
IN1
IN2
IN3
ERROR
VCO INH
LR CLK
DATA
BIT CLK
VCO OUT
EMPH
8 TIMES
OVER SAMPLING
DIGITAL FILTER
L DATA OUT
WORD CLK
BIT CLK
R DATA OUT
IC301 PD0060
18 BIT D/A
CONVERTER
BCK
WCK
RDIN
LDIN
L OUT
R OUT
IC302 LC78820
IC401
M5218AL
LPF
IC402
M5218AL
TR481
TR482
L:ON
L-CH OUT
TR402
MUTE
R-CH OUT
DE-EMPHASIS
TR7
TR484
R-CH
CIRCUIT
TR483
H:EMPHASIS ON
D123
TO POWER AMP
+B
TO POWER AMP
-B
-VP
TO J4 (CD)
& JACK PCB (TUNER)
TR105, D121
-32V
REG
D115, 117 & C129, 131
X2
RECTIFICATION
D116, 118 & C130, 132
TR102, D105
+7V
REG
TR103, D106
-7V
REG
D102
D101
D104
D103
TR104, D113
+5.6V
REG
D109~112
AC24V
OR31V
AC17V
AC10V
AC9V
GND
VF (AC4V)
TO J3 (DECK)
TO J4 (CD)
& JACK PCB (TUNER)
TO J4 (CD)
AC18V
IC2 PD0029
4 TIMES
OVER SAMPLING
AUDIO DIGITAL FILTER
Vdd
LRCLK
DATA
BIT CLK
VCO OUT
LRCK IN
D.IN
BCK IN
XT
LRCO
D.OUT
BCKOUT
IC3 μPD6376
DUAL
D/A CONVERTOR
DVDD
AVDD
LRCK
SERIAL IN
CLK
L-CH OUT
R-CH OUT
TR1
REG
TR14
ON/OFF
VCO INH
TR7
L:ON
TR6, 12
DRIVE
TR13 (B)
IC4 (1/2)
BA15218
TR10
MUTE
TR5
TR4
TR8
TR3
TR2
+7V
+8V
EMPHASIS
ERROR
TR13
VCO INH
H:ON
MAIN AMP PCB

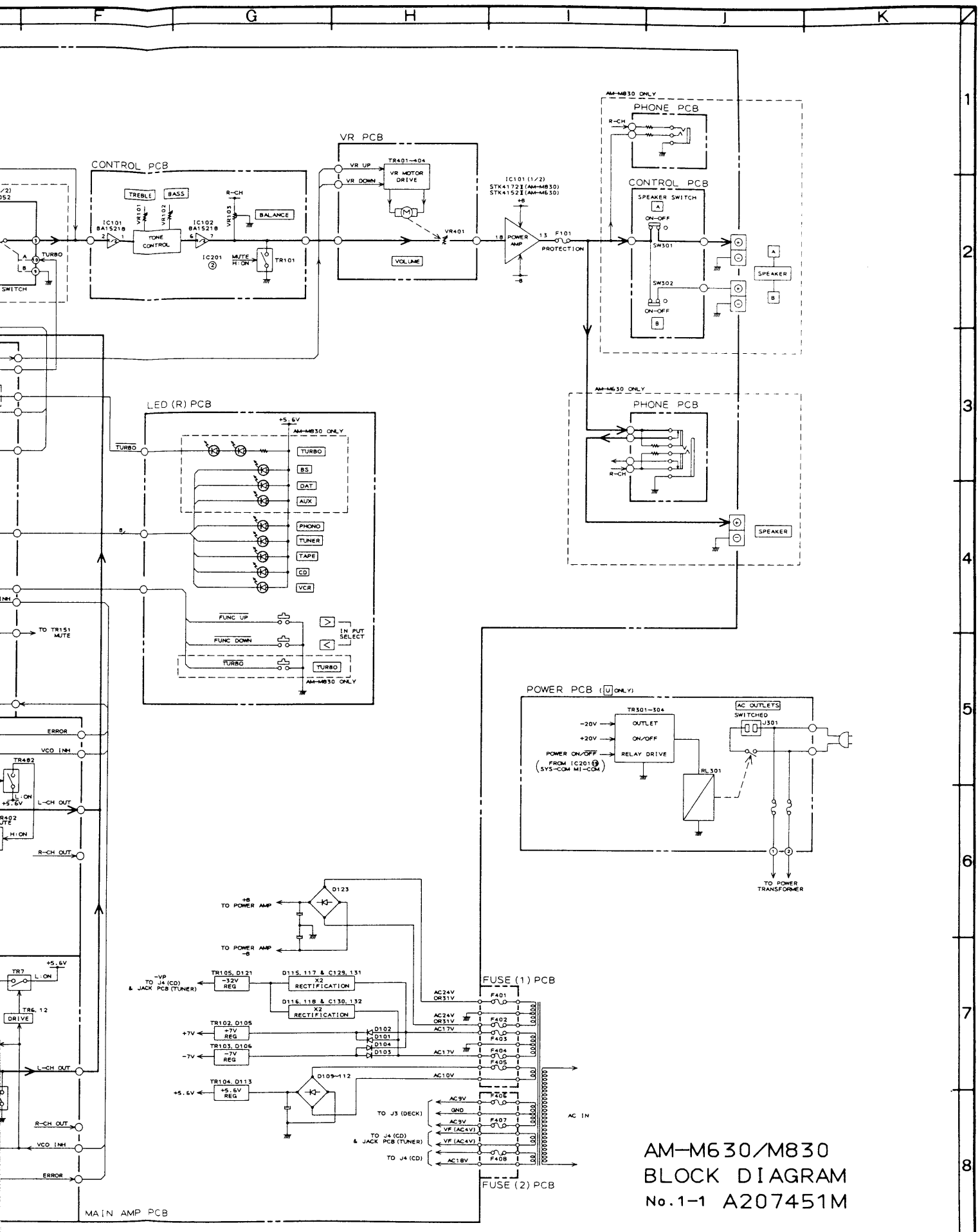

AM-M630/M830
BLOCK DIAGRAM
No.1-1 A207451M

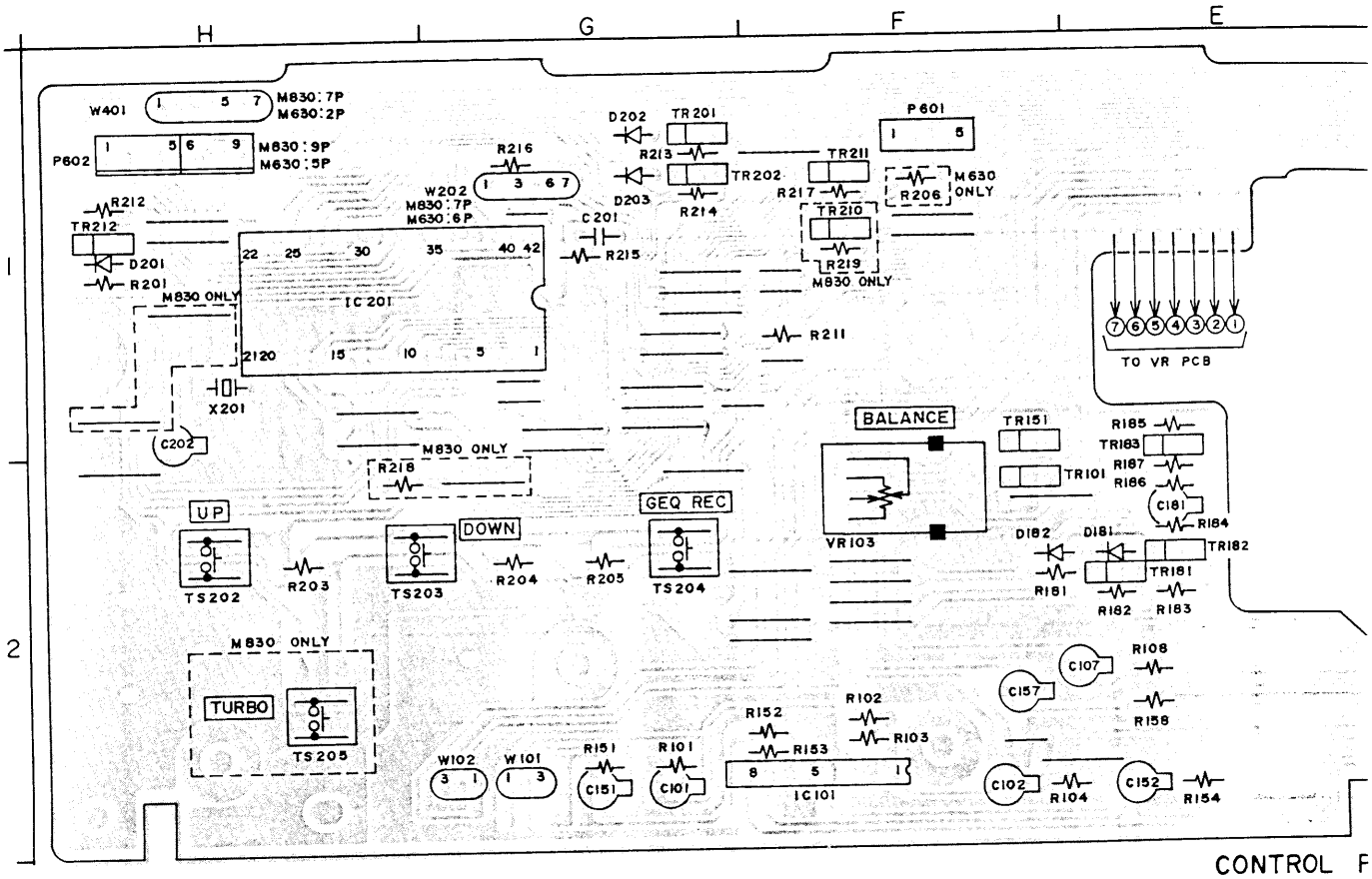

CONTROL F

PRINCIPAL PARTS LOCATION

ICS
IC101.....F2
IC102.....D,C2
IC201.....H,G1

CONNECTORS
P501.....A1
P502.....C1
P601.....F1
P602.....H1
W101.....G2
W102.....G2
W201.....D1
W202.....G1
W301.....B2
W302.....B2
W401.....H1

TRANSISTORS
TR101.....F2
TR151.....F2
TR181.....E2
TR182.....E2
TR183.....E2
TR201.....G1
TR202.....G1
TR203.....B1
TR204.....B1
TR205.....B1
TR206.....B1
TR207.....C1
TR208.....C1
TR209.....C1
TR210.....F1
TR211.....F1
TR212.....H1

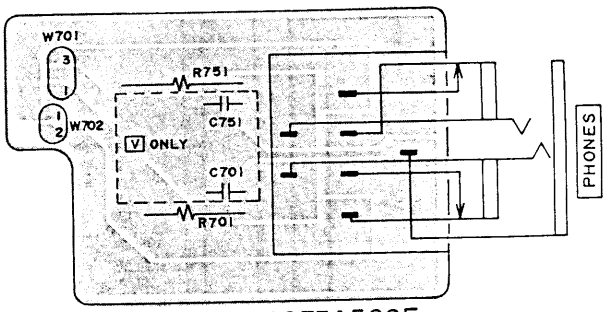

PHONE PCB A2073A502E
(AM-M630)

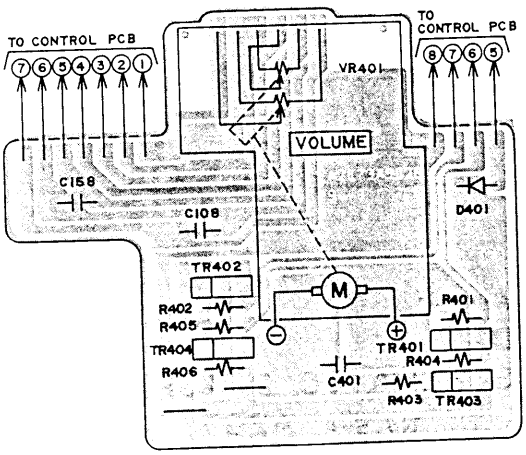

VR PCB A2073A502B

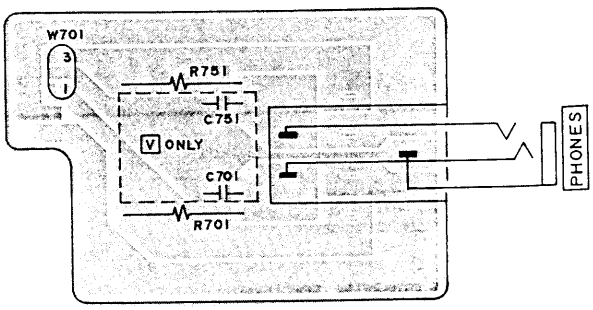

PHONE PCB A2073A502E
(AM-M830)

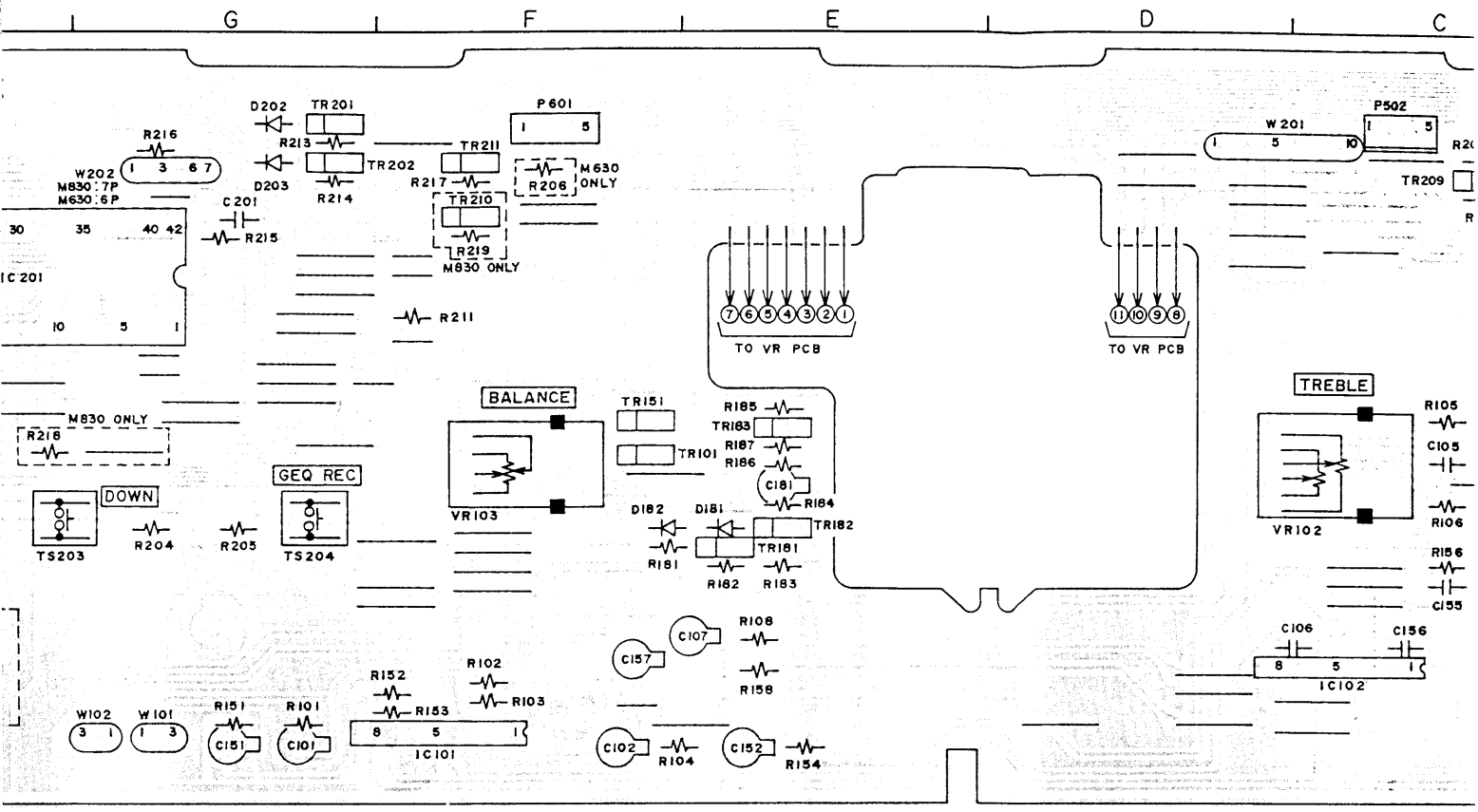

CONTROL PCB A2073A502A

'ION

'TRANSISTORS

TR101.....F2
TR151.....F2
TR181.....E2
TR182.....E2
TR183.....E2
TR201.....G1
TR202.....G1
TR203.....B1
TR204.....B1
TR205.....B1
TR206.....B1
TR207.....C1
TR208.....C1
TR209.....C1
TR210.....F1
TR211.....F1
TR212.....H1

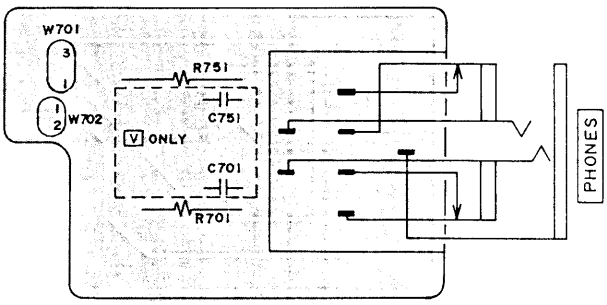

PHONE PCB A2073A502E
(AM-M630)

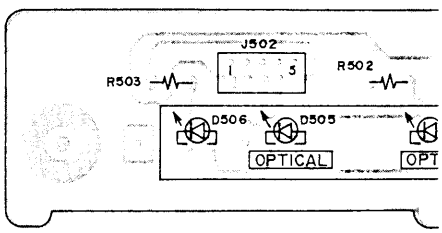

L

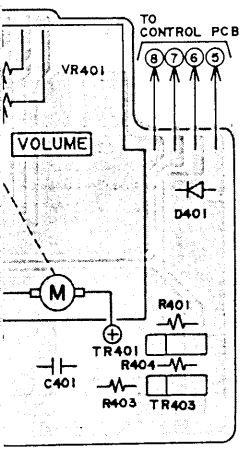

A2073A502B

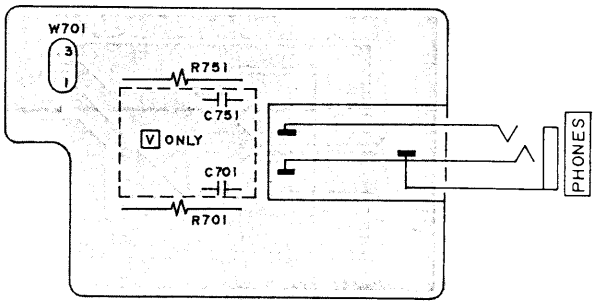

PHONE PCB A2073A502E
(AM-M830)

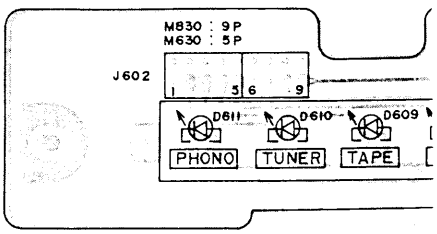

(M630 : VCF
(M830 : DAT

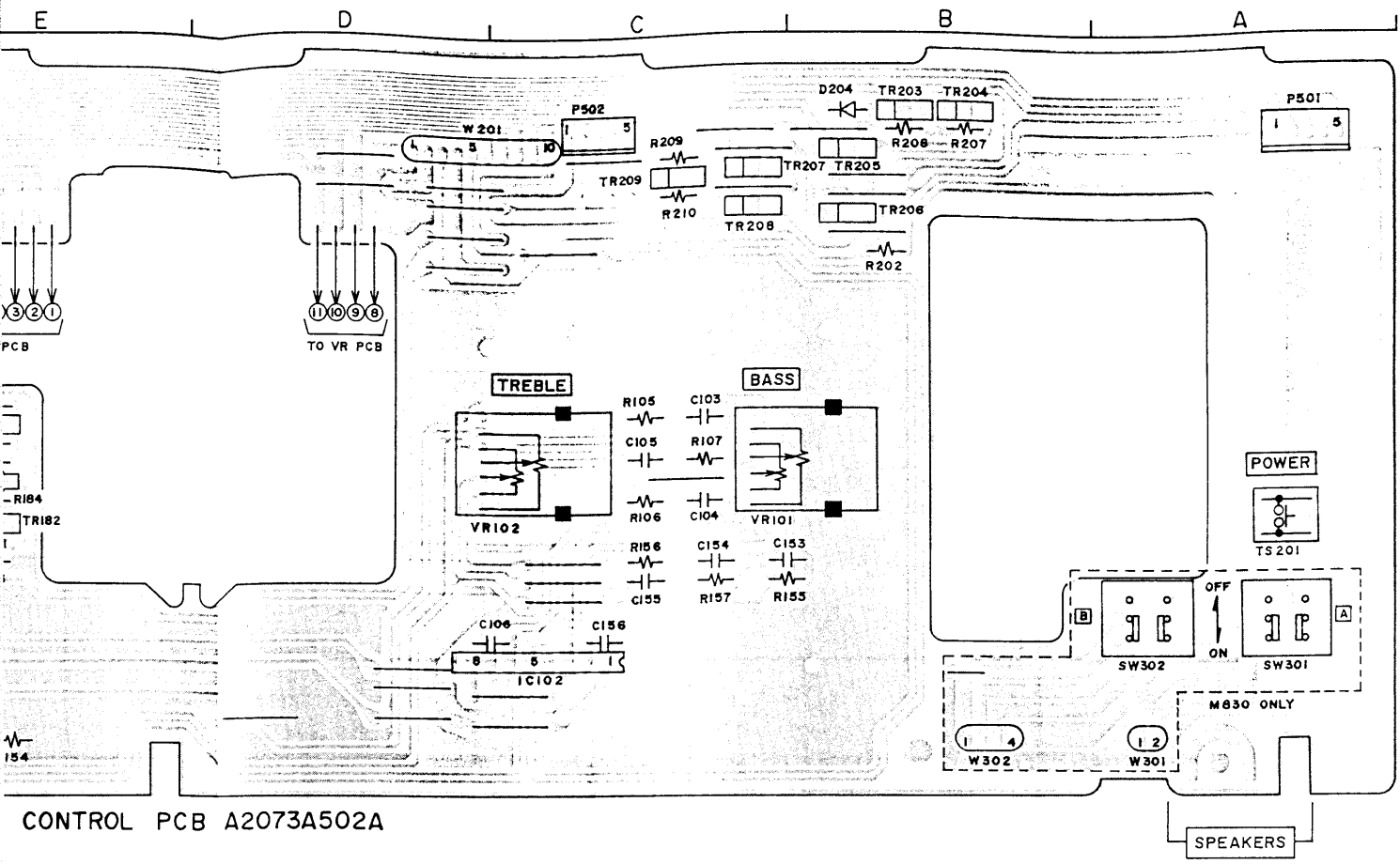

CONTROL PCB A2073A502A

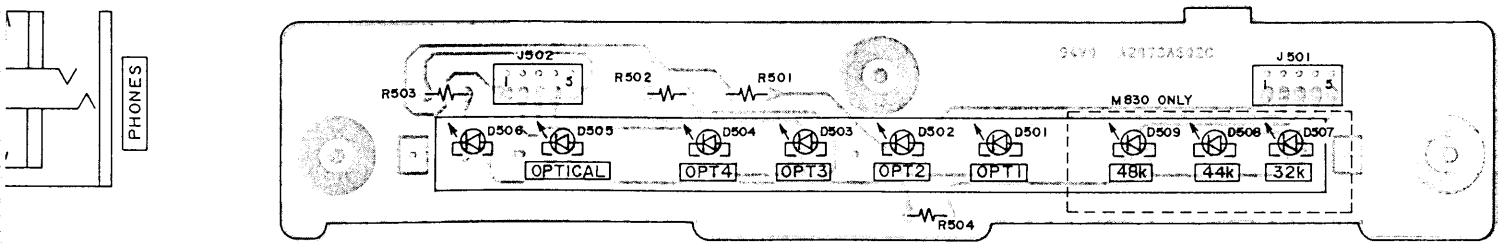

LED (L) PCB A2073A502C

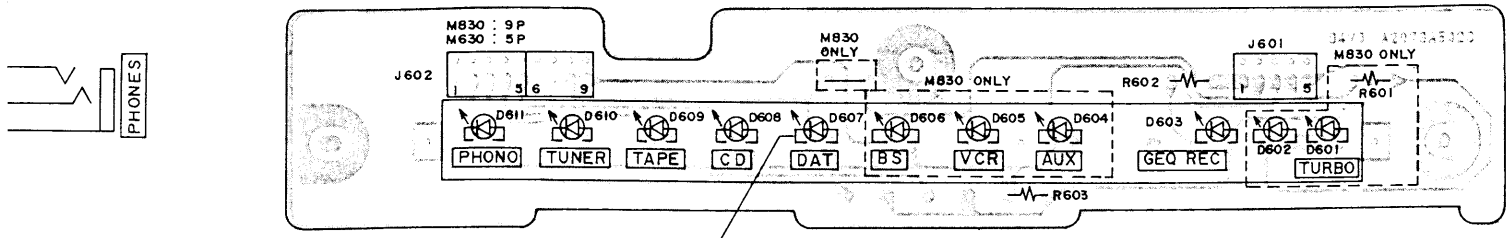

LED (R) PCB A2073A502D

(M630 : VCR)
(M830 : DAT)

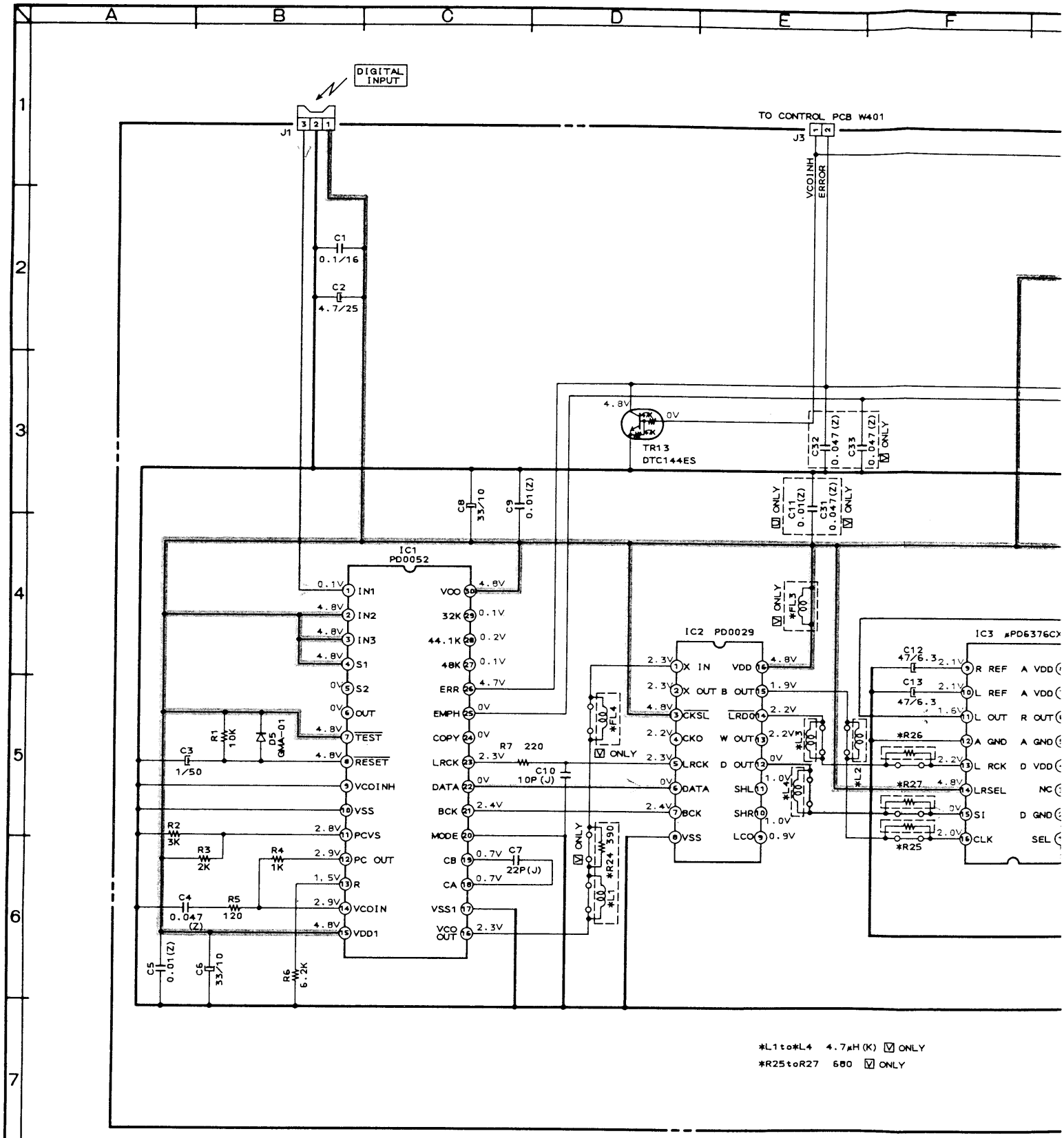

DAC-A PCB A2068A5030

INDICA
WHEN N
(FUNCT

NOTE
UNLESS
ALL RE
ALL CA
ALL DI
ALL TR

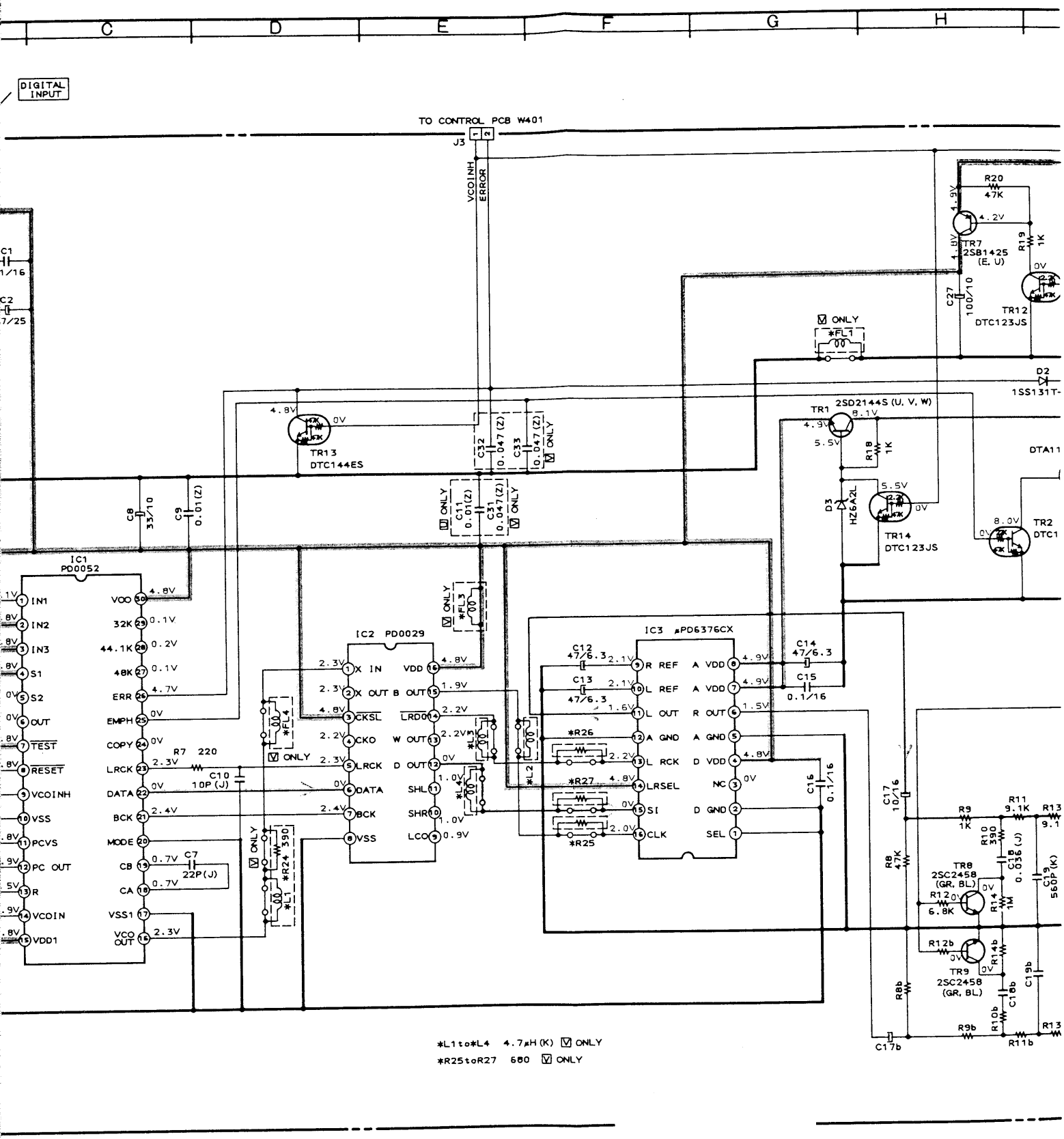

A2068A5030

B (POWER SUPPLY) LINE

SIGNAL LINE

S WERE MEASURED
WHEN NO SIGNAL WAS BEING INPUT.
(FUNCTION: CD MODE)

NOTE
UNLESS OTHERWISE SPECIFIED
ALL RESISTORS IN OHMS 1/6W (J)
ALL CAPACITORS IN μF 50WV (M)
ALL DIODES ARE 1SS131
ALL TRANSISTORS ARE 2SC2458 (GR, BL)

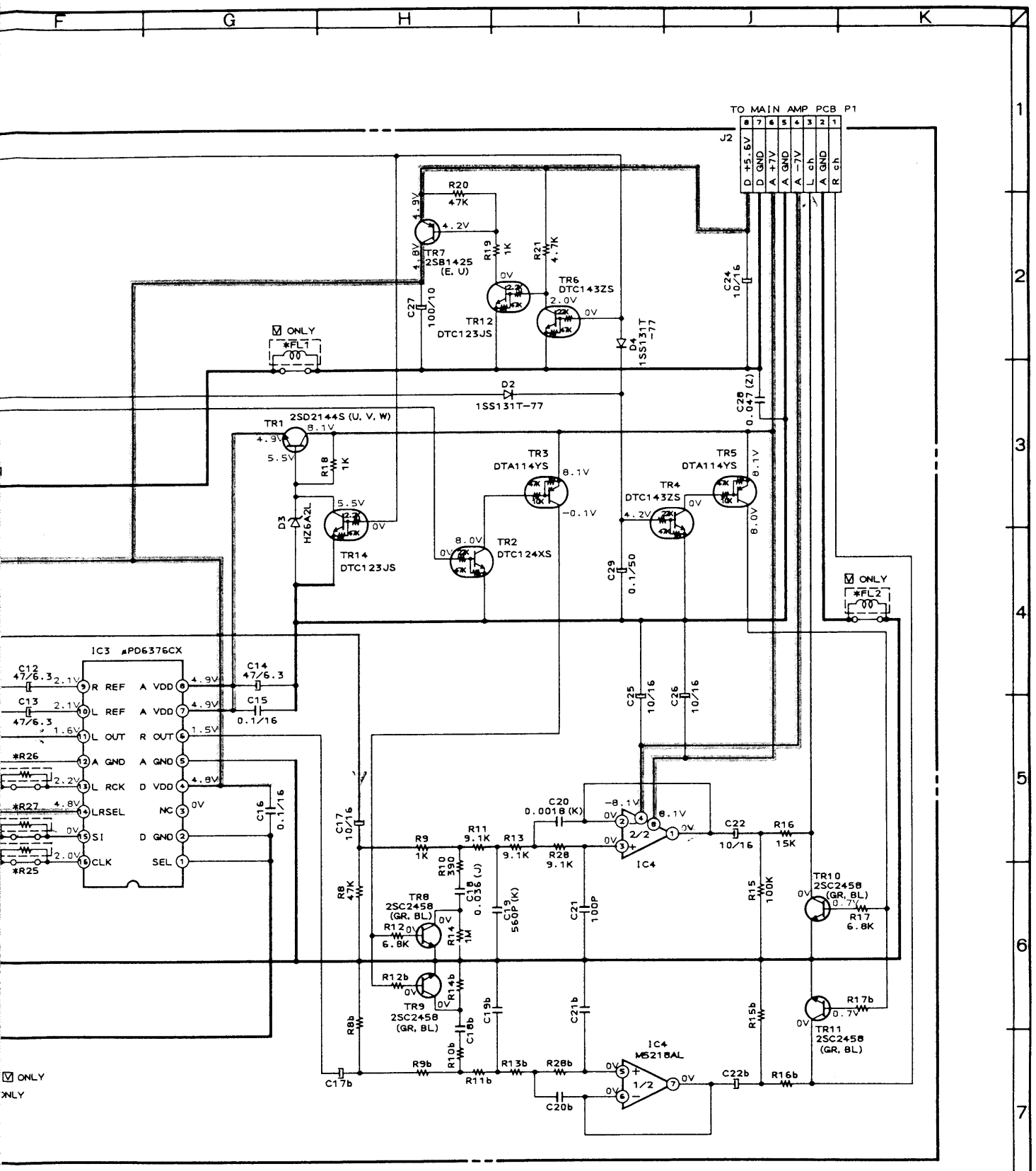

INDICATED VOLTAGES WERE MEASURED
WHEN NO SIGNAL WAS BEING INPUT.
(FUNCTION: CD MODE)

NOTE
UNLESS OTHERWISE SPECIFIED
ALL RESISTORS IN OHMS 1/6W (J)
ALL CAPACITORS IN μF 50WV (M)
ALL DIODES ARE 1SS131
ALL TRANSISTORS ARE 2SC2458 (GR, BL)

AM-M630
DAC-A
SCHEMATIC DIAGRAM

No.5-4 A207304M

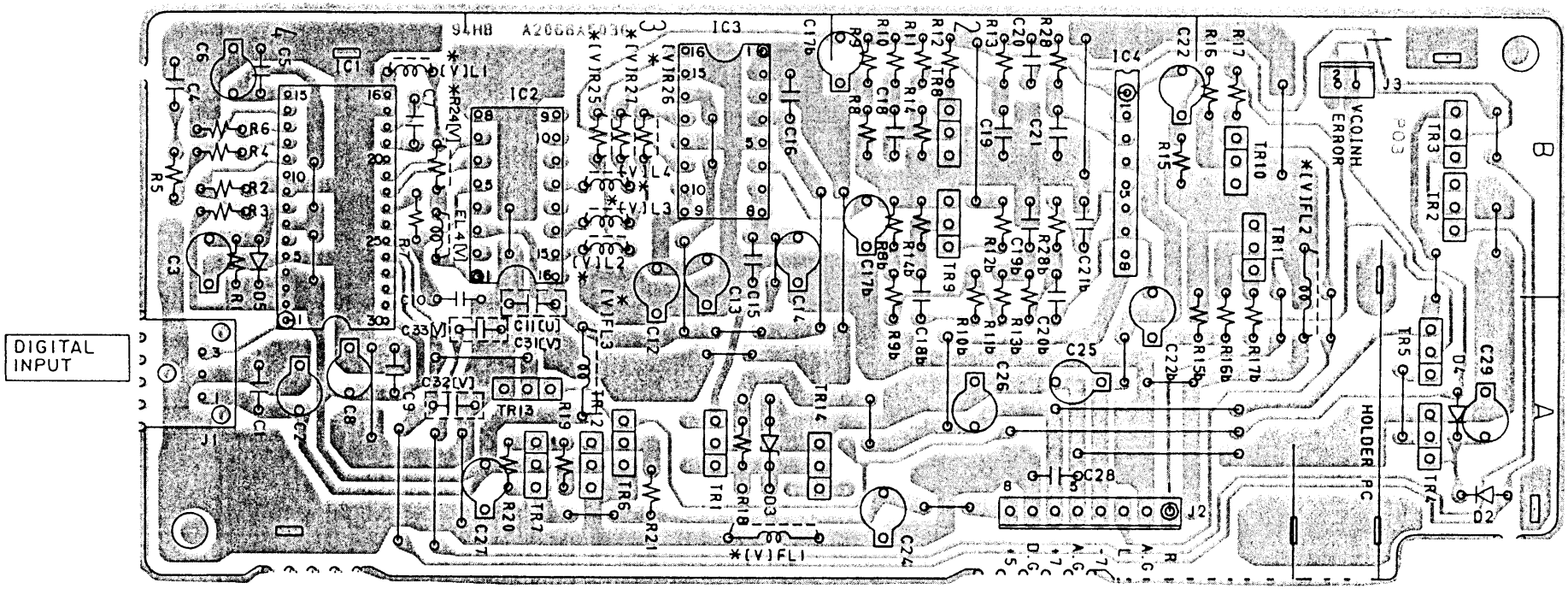

✳ Indicated----are [V] model only

DAC-A PCB A2068A5030

PRINCIPAL PARTS LOCATION

TRANSISTORS
TR1.....A3
TR2.....B1
TR3.....B1
TR4.....A1
TR5.....A1
TR6.....A3
TR7.....A3
TR8.....B2
TR9.....B2
TR10.....B1
TR11.....B1
TR12.....A3
TR13.....A3
TR14.....A3

ICS
IC1.....B4
IC2.....B3
IC3.....B3
IC4.....B2

CONNECTORS
J1.....A4
J2.....A2
J3.....B1

PRINCIPAL PARTS LOCATION

ICS
IC101.....D3
IC201.....C3
IC301.....C2
IC302.....D2
IC401.....C1,2
IC402.....D1

CONNECTORS
J101.....C4
J102.....D4
J201.....D2
J401.....C2

TRANSISTORS
TR301.....D2
TR401.....D1
TR402.....C1
TR451.....D1
TR452.....C1
TR481.....D2
TR482.....C1
TR483.....C3
TR484.....D1

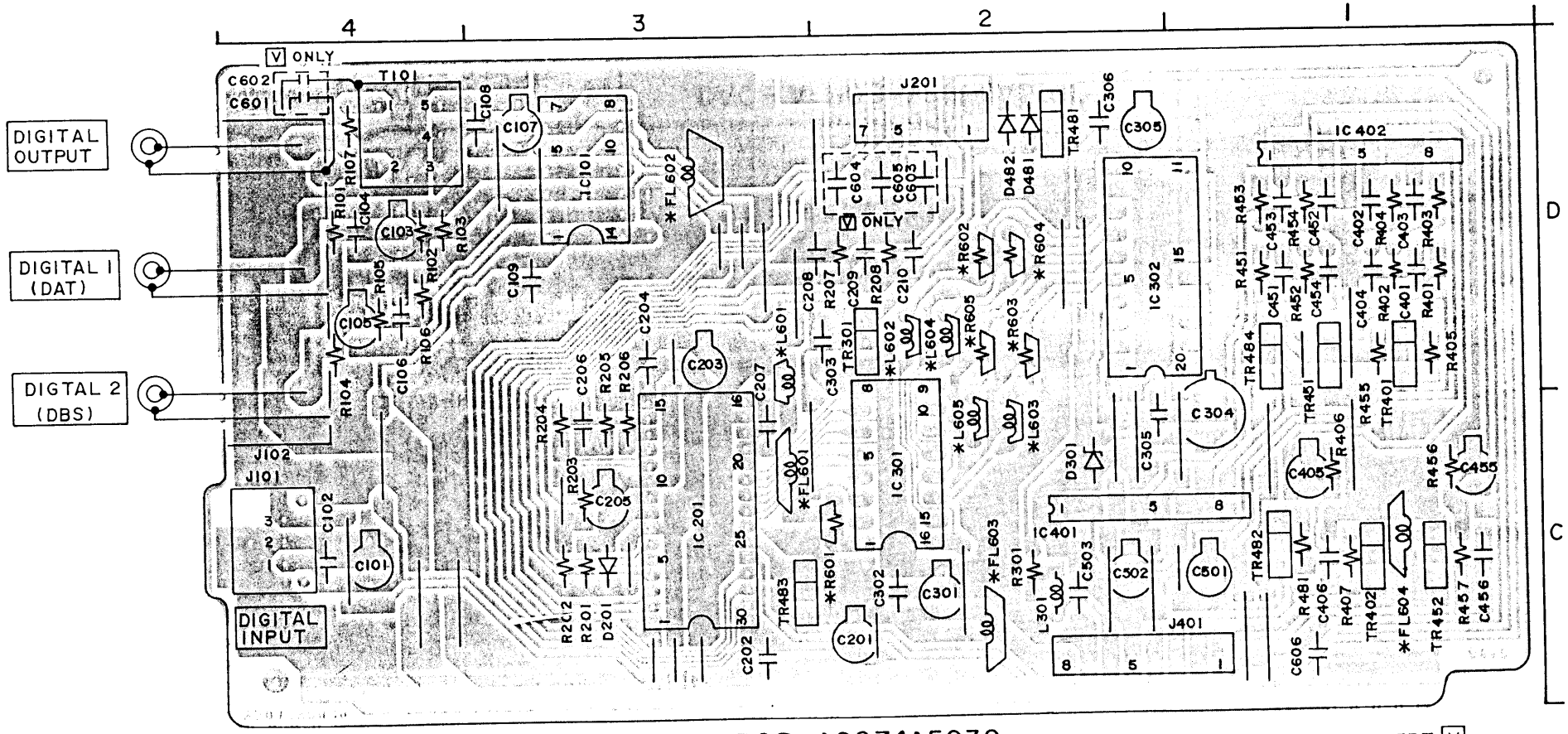

DAC - B PCB A2074A5030

* SHORT ALL MODELS EXCEPT V

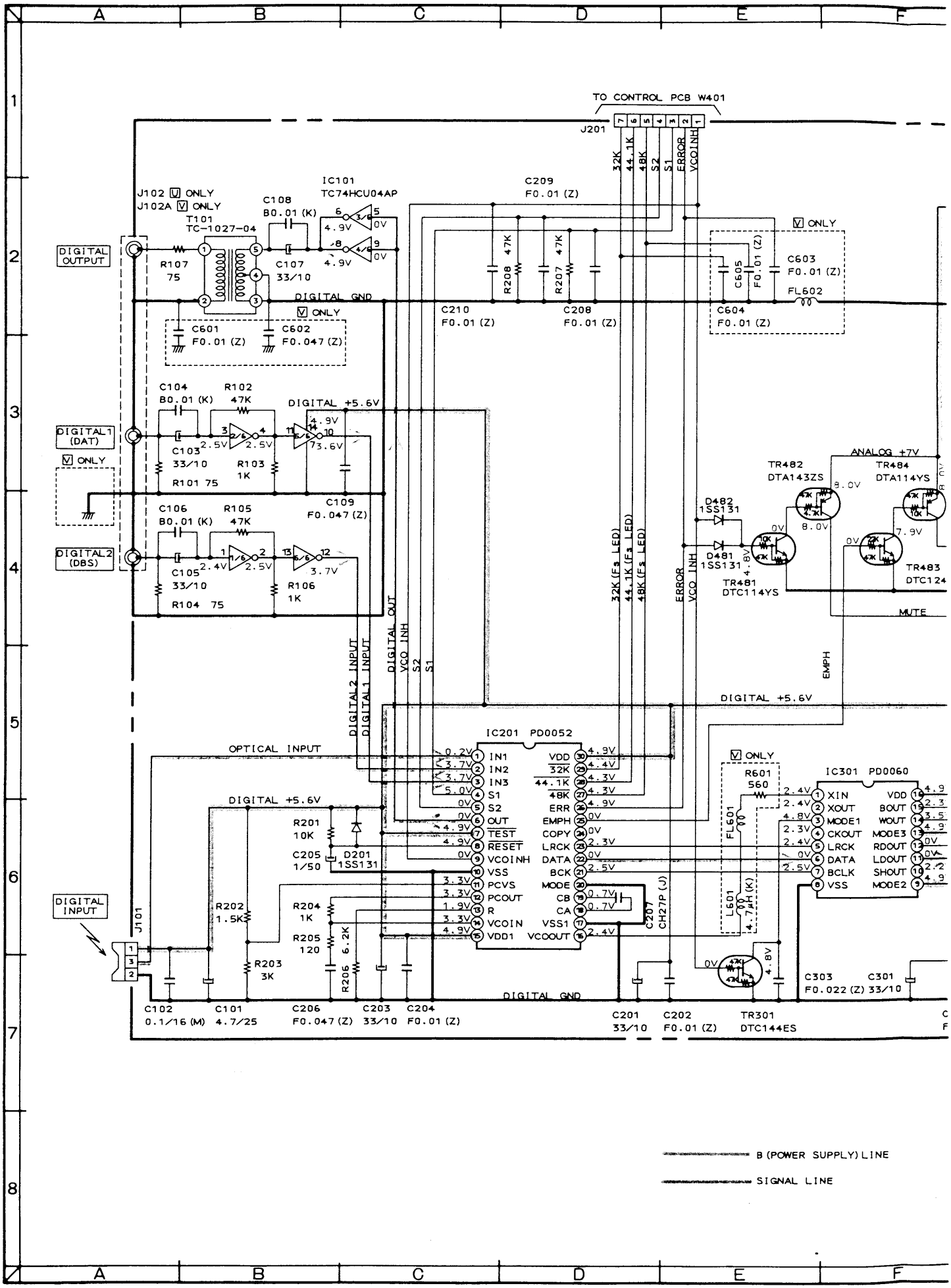
TO CONTROL PCB W401
J201
32K
44.1K
48K
S2
S1
ERROR
VCOINH
IC101
TC74HCU04AP
C108
B0.01 (K)
C209
F0.01 (Z)
J102 ▽ ONLY
J102A ▽ ONLY
T101
TC-1027-04
DIGITAL OUTPUT
R107
75
C107
33/10
DIGITAL GND
▽ ONLY
C601
F0.01 (Z)
C602
F0.047 (Z)
R208 47K
R207 47K
C605
F0.01 (Z)
C603
F0.01 (Z)
FL602
C604
F0.01 (Z)
C210
F0.01 (Z)
C208
F0.01 (Z)
C104
B0.01 (K)
R102
47K
DIGITAL +5.6V
DIGITAL1 (DAT)
C103
33/10
R101 75
R103
1K
C109
F0.047 (Z)
C106
B0.01 (K)
R105
47K
DIGITAL2 (DBS)
C105
33/10
R104 75
R106
1K
ANALOG +7V
TR482
DTA143ZS
TR484
DTA114YS
D482
1SS131
D481
1SS131
TR481
DTC114YS
TR483
DTC124
MUTE
EMPH
DIGITAL2 INPUT
DIGITAL1 INPUT
DIGITAL OUT
VCO INH
S2
S1
32K (Fs LED)
44.1K (Fs LED)
48K (Fs LED)
ERROR
VCO INH
IC201 PD0052
OPTICAL INPUT
IN1
IN2
IN3
S1
S2
OUT
TEST
RESET
VCOINH
VSS
PCVS
PCOUT
R
VCOIN
VDD1
VDD
32K
44.1K
48K
ERR
EMPH
COPY
LRCK
DATA
BCK
MODE
CB
CA
VSS1
VCOOUT
R601
560
FL601
L601
4.7μH (K)
IC301 PD0060
XIN
XOUT
MODE1
CKOUT
LRCK
DATA
BCLK
VSS
VDD
BOUT
WOUT
MODE3
RDOUT
LDOUT
SHOUT
MODE2
R201
10K
C205
1/50
D201
1SS131
DIGITAL INPUT
J101
R202
1.5K
R204
1K
R205
120
R206
6.2K
R203
3K
C207
CH27P (J)
C303
F0.022 (Z)
C301
33/10
C102
0.1/16 (M)
C101
4.7/25
C206
F0.047 (Z)
C203
33/10
C204
F0.01 (Z)
C201
33/10
C202
F0.01 (Z)
TR301
DTC144ES
B (POWER SUPPLY) LINE
SIGNAL LINE

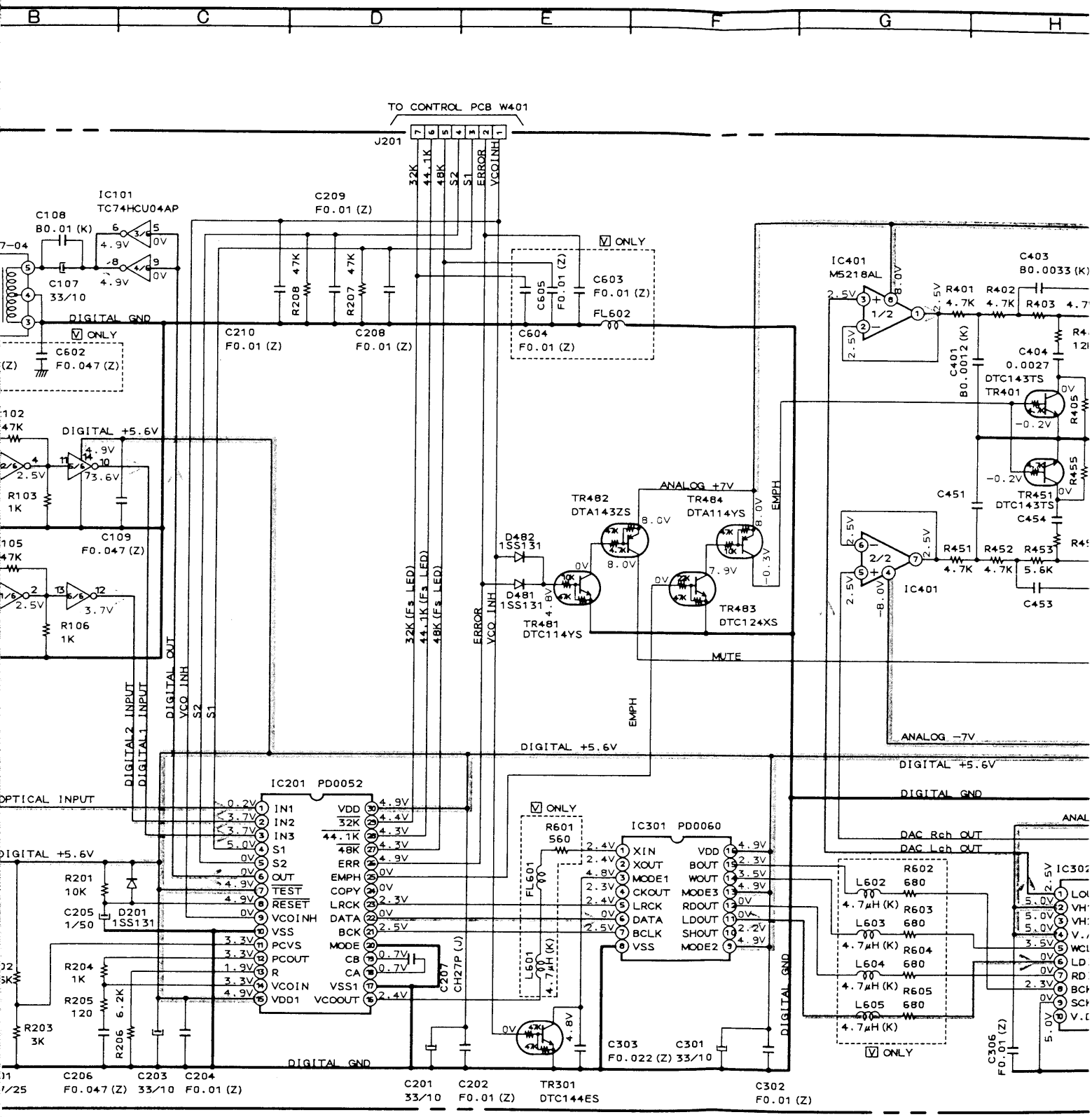

INDICATED VOLTAGES WERE MEASURED WHEN NO SIGNAL WAS BEING INPUT. (FUNCTION:CD MODE)

B (POWER SUPPLY) LINE

SIGNAL LINE

NOTE
UNLESS OTHERWISE SPECIFIED
ALL RESISTORS IN OHMS 1/6W (J)
ALL CAPACITORS IN μF 50WV (J)

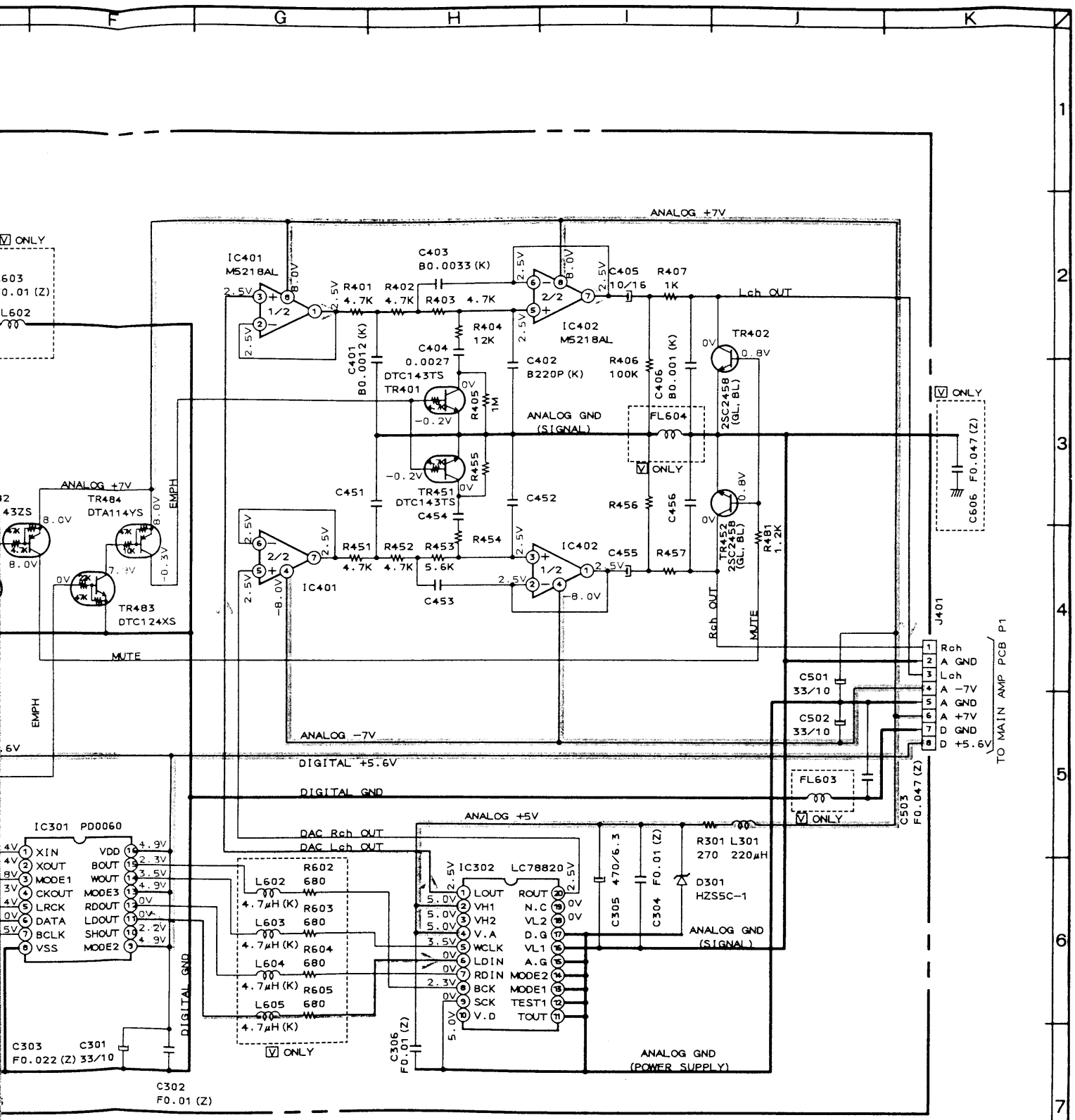

DAC−B PCB A2074B5030

INDICATED VOLTAGES WERE MEASURED
WHEN NO SIGNAL WAS BEING INPUT.
(FUNCTION:CD MODE)

NOTE
UNLESS OTHERWISE SPECIFIED
ALL RESISTORS IN OHMS 1/6W (J)
ALL CAPACITORS IN μF 50WV (J)

AM−M830
DAC−B
SCHEMATIC DIAGRAM
No.5−5 A207401M

For Service Manuals
MAURITRON SERVICES
8 Cherry Tree Road, Chinnor
Oxfordshire, OX9 4QY.
Tel (01844) 351694
Fax (01844) 352554
email:- sales@mauritron.co.uk

LC6520-4649 (MI-CON)

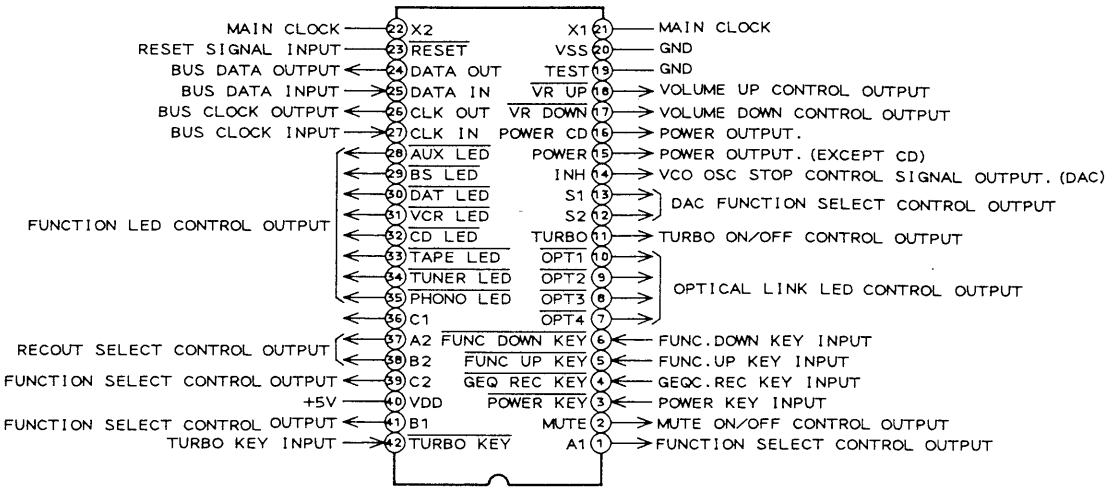

LC78820 (18 BIT D / A CONVERTER)

PIN NO	SYMBOL	I / O	DESCRIPTION
1	L OUT	O	L ch output
2	VH 1	I	Reference voltage "H" input 1
3	VH 2	I	Reference voltage "H" input 2 (Not used)
4	V.A	-	Analog +B (+5 V)
5	W CLK	I	Word clock input
6	LD IN	I	L ch digital audio data input (MSB first)
7	RD IN	I	R ch digital audio data input (MSB first)
8	BCK	I	Bit clock input
9	SCK	I	System clock input
10	V.D	-	Digital +B (+5V)
11	T OUT	O	Test output (normal:open)
12	TEST 1	I	Test input (normal:GND)
13	MODE 1	I	Interface select
14	MODE 2	I	Interface select
15	A.G	-	Analog GND
16	VL 1	I	Reference voltage "L" input 1 (Not used)
17	D.G	-	Digital GND
18	VL 2	I	Reference voltage "L" input 2 (Not used)
19	N.C	-	No connection (Not used)
20	R OUT	O	R ch output

PD0029 (AUDIO DIGITAL FILTER)

PIN NO	SYMBOL	I / O	DESCRIPTION
1	X IN	I	X'tal osc input
2	X OUT	O	X'tal osc output (Not used)
3	CKSL	I	Clock select H : 16.9344MHz L : 8.4672MHz
4	CKO	O	Clock output (Not used)
5	LRCK	I	L, R clock input
6	DATA	I	serial data input (MSB first)
7	BCLK	I	Bit clock input for input data
8	Vss	-	GND
9	LCO	O	Clock output for 2 DAC type (Not used)
10	SHR	O	R ch sample hold pulse output
11	SHL	O	L ch sample hold pulse output
12	D OUT	O	Serial data output (MSB first)
13	W OUT	O	Word clock output (Not used)
14	LR DO	O	L,R select clock output
15	B OUT	O	Bit clock output for data output
16	VDD	-	+B (+5 V)

PD0060 (AUDIO DIGITAL FILTER)

PIN NO	SYMBOL	I / O	DESCRIPTION
1	X IN	I	X'tal osc or external input
2	X OUT	O	X'tal osc output (Not used)
3	MODE 1	I	Master clock input and clock output select
4	CK OUT	O	External clock output (Not used)
5	LR CK	I	L, R clock input
6	DATA	I	Serial data input (MSB first)
7	BCLK	I	Bit clock input for input data
8	Vss	-	GND
9	MODE 2	I	H : 18bit data output L : 16bit data output
10	SHOUT	O	Sample hold pulse output (Not used)
11	LD OUT	O	L ch data output (MSB first)
12	RD OUT	O	R ch data output (MSB first)
13	MODE 3	I	H : 18 or 16 bit data output L : 20 bit data output
14	W OUT	O	Word clock output
15	B OUT	O	Bit clock output for L, R data output
16	VDD	-	+B (+5 V)

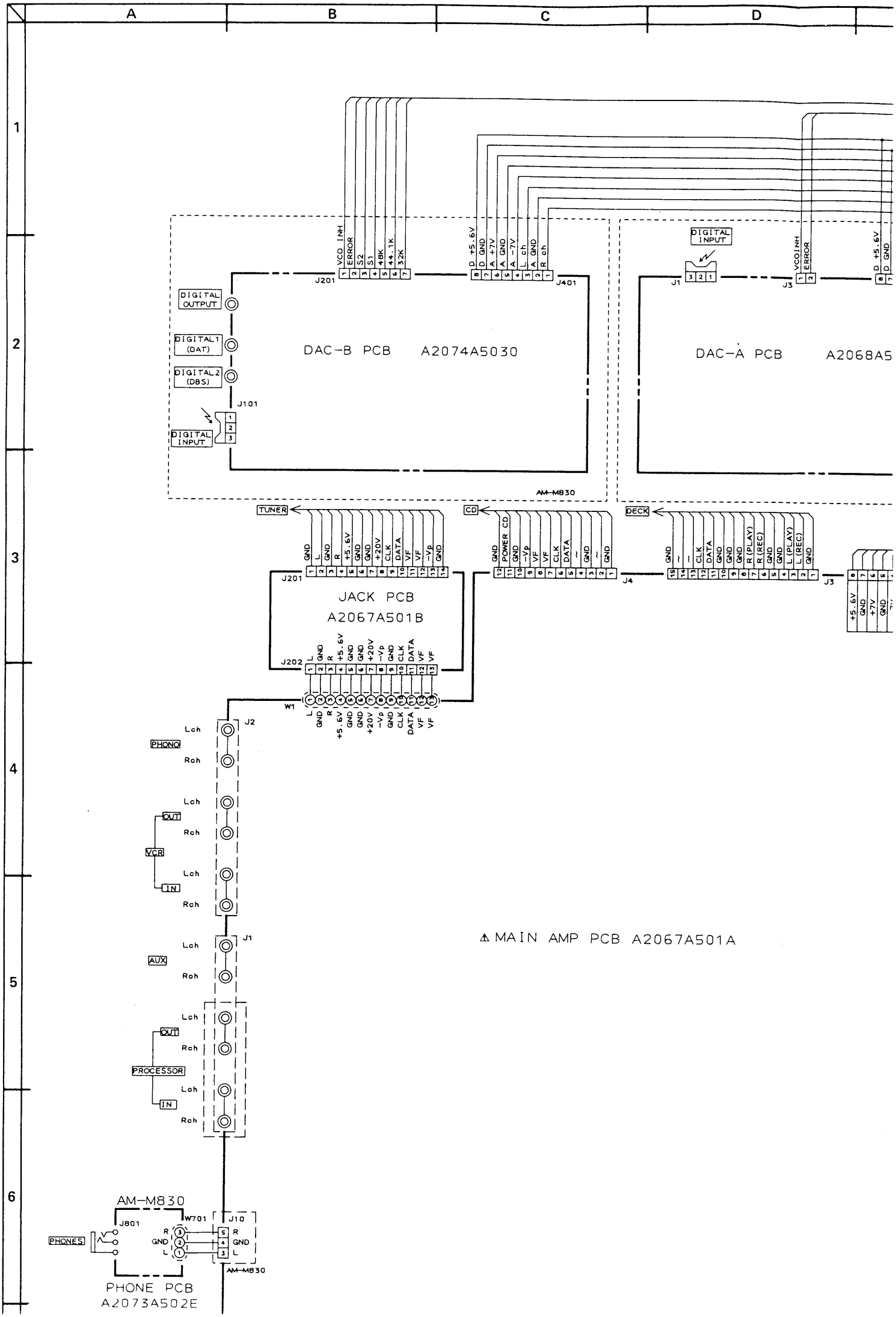
DAC-B PCB A2074A5030
DAC-A PCB A2068A5
DIGITAL OUTPUT
DIGITAL1 (DAT)
DIGITAL2 (DBS)
DIGITAL INPUT
VCO INH
ERROR
S2
S1
48K
44.1K
32K
D +5.6V
D GND
A +7V
A GND
A -7V
L ch
A GND
R ch
J201
J401
J101
J1
J3
AM-M830
TUNER
CD
DECK
JACK PCB
A2067A501B
J202
J4
W1
J2
PHONO
VCR
AUX
PROCESSOR
OUT
IN
Lch
Rch
⚠ MAIN AMP PCB A2067A501A
AM-M830
J801
W701
J10
PHONES
PHONE PCB
A2073A502E

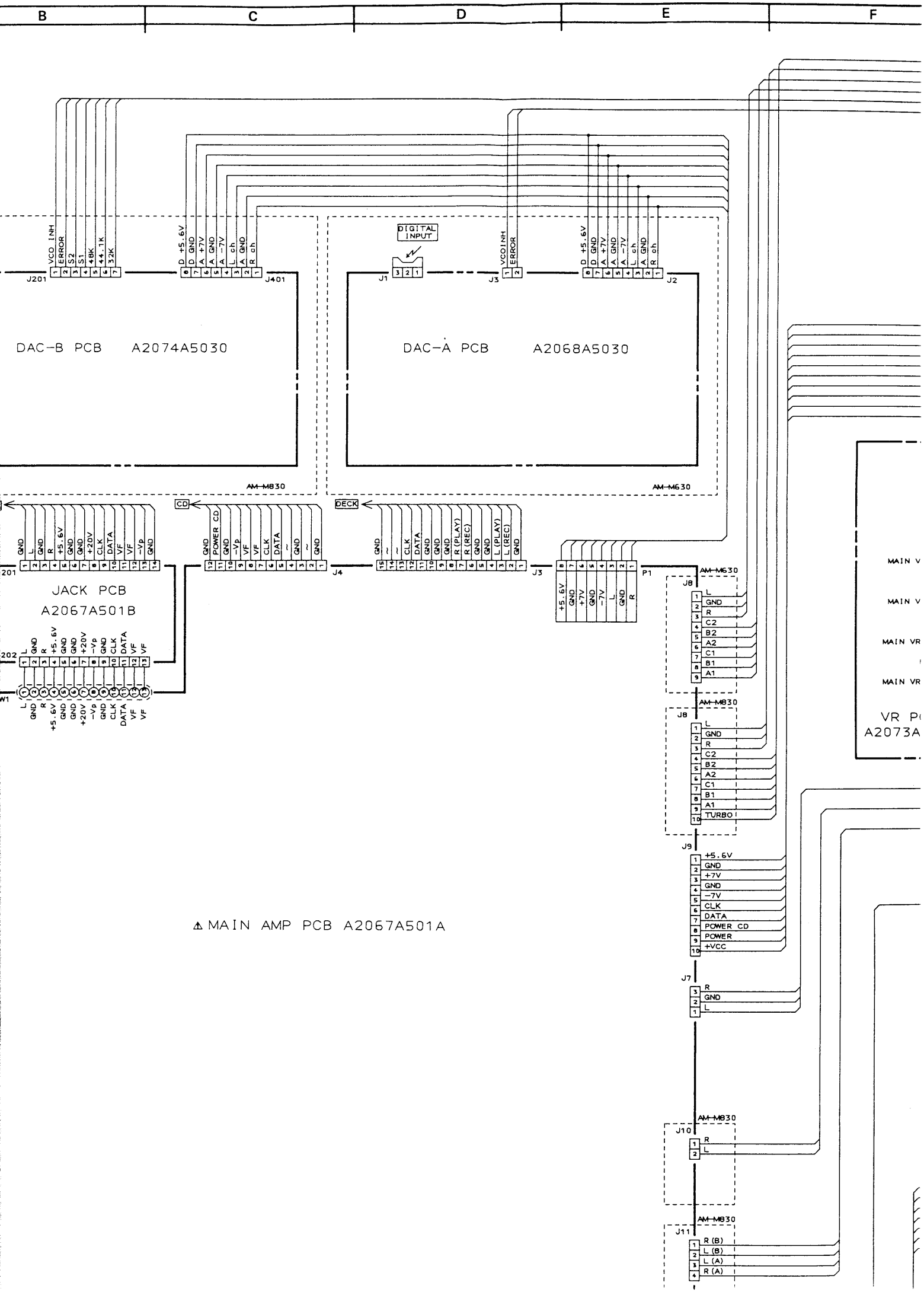
B
C
D
E
F
DAC-B PCB A2074A5030
DAC-A PCB A2068A5030
DIGITAL INPUT
AM-M830
AM-M630
CD
DECK
JACK PCB
A2067A501B
MAIN AMP PCB A2067A501A
J201
J401
J1
J3
J2
J4
P1
J8
J9
J7
J10
J11
VCO INH
ERROR
S2
S1
48K
44.1K
32K
D +5.6V
D GND
A +7V
A GND
A -7V
L ch
R ch
POWER CD
CLK
DATA
VF
-Vp
+20V
R (PLAY)
R (REC)
L (PLAY)
L (REC)
TURBO
POWER
+VCC
R (B)
L (B)
L (A)
R (A)

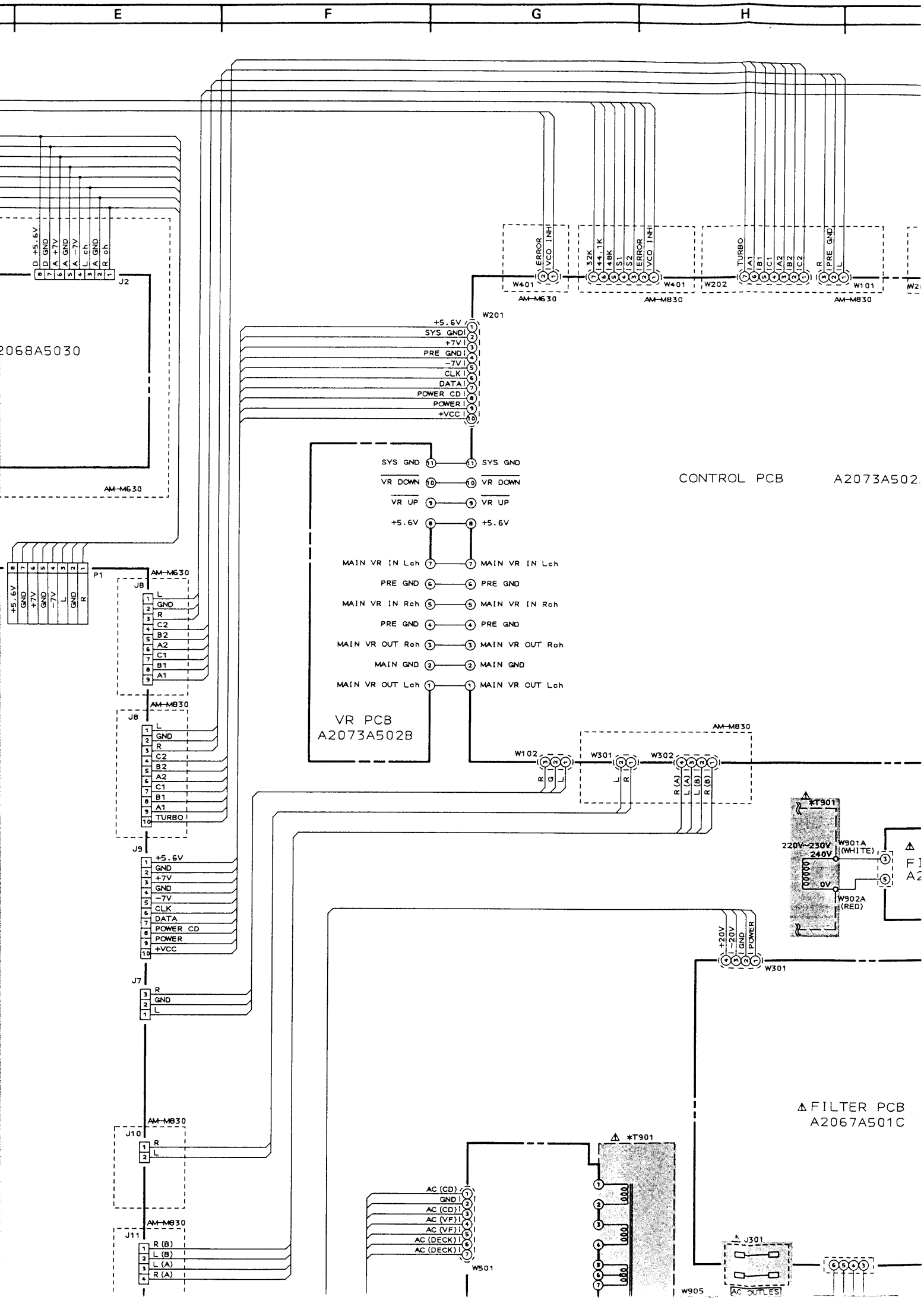
E
F
G
H
J2
2068A5030
AM-M630
P1
J8
J9
J7
J10
J11
AM-M830
W201
+5.6V
SYS GND
+7V
PRE GND
-7V
CLK
DATA
POWER CD
POWER
+VCC
W401
W202
W101
W102
W301
W302
ERROR
VCO INH
32K
44.1K
48K
S1
S2
TURBO
A1
B1
C1
A2
B2
C2
PRE GND
R
L
SYS GND
VR DOWN
VR UP
MAIN VR IN Lch
MAIN VR IN Rch
MAIN VR OUT Rch
MAIN VR OUT Lch
MAIN GND
VR PCB
A2073A502B
CONTROL PCB
A2073A502
*T901
220V~230V
240V
0V
W901A
(WHITE)
W902A
(RED)
+20V
-20V
GND
POWER
FILTER PCB
A2067A501C
AC (CD)
GND
AC (VF)
AC (DECK)
W501
W905
J301
AC OUTLET

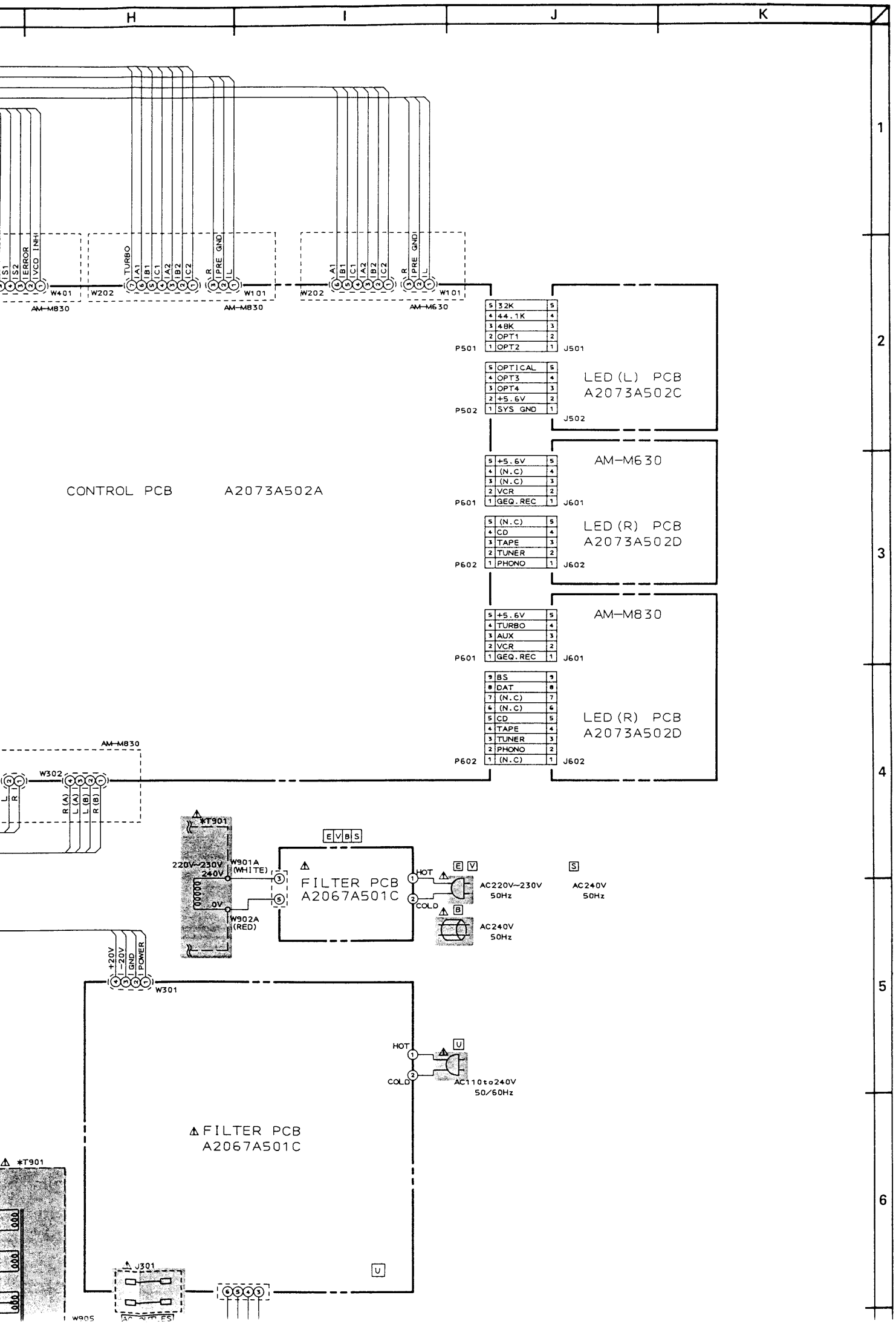
H
I
J
K
1
2
3
4
5
6
S1
S2
ERROR
VCD INH
W401
AM-M830
TURBO
A1
B1
C1
A2
B2
C2
R
PRE GND
L
W202
W101
AM-M830
AM-M830
A1
B1
C1
A2
B2
C2
R
PRE GND
L
W202
W101
AM-M630
P501
5 32K 5
4 44.1K 4
3 48K 3
2 OPT1 2
1 OPT2 1
J501
P502
5 OPTICAL 5
4 OPT3 4
3 OPT4 3
2 +5.6V 2
1 SYS GND 1
J502
LED (L) PCB
A2073A502C
CONTROL PCB A2073A502A
P601
5 +5.6V 5
4 (N.C) 4
3 (N.C) 3
2 VCR 2
1 GEQ.REC 1
J601
AM-M630
P602
5 (N.C) 5
4 CD 4
3 TAPE 3
2 TUNER 2
1 PHONO 1
J602
LED (R) PCB
A2073A502D
P601
5 +5.6V 5
4 TURBO 4
3 AUX 3
2 VCR 2
1 GEQ.REC 1
J601
AM-M830
P602
9 BS 9
8 DAT 8
7 (N.C) 7
6 (N.C) 6
5 CD 5
4 TAPE 4
3 TUNER 3
2 PHONO 2
1 (N.C) 1
J602
LED (R) PCB
A2073A502D
AM-M830
W302
R (A)
L (A)
L (B)
R (B)
*T901
220V~230V
240V
W901A
(WHITE)
0V
W902A
(RED)
E V B S
FILTER PCB
A2067A501C
HOT
COLD
E V
AC220V~230V
50Hz
S
AC240V
50Hz
B
AC240V
50Hz
+20V
-20V
GND
POWER
W301
HOT
COLD
U
AC110to240V
50/60Hz
FILTER PCB
A2067A501C
*T901
J301
U
W905

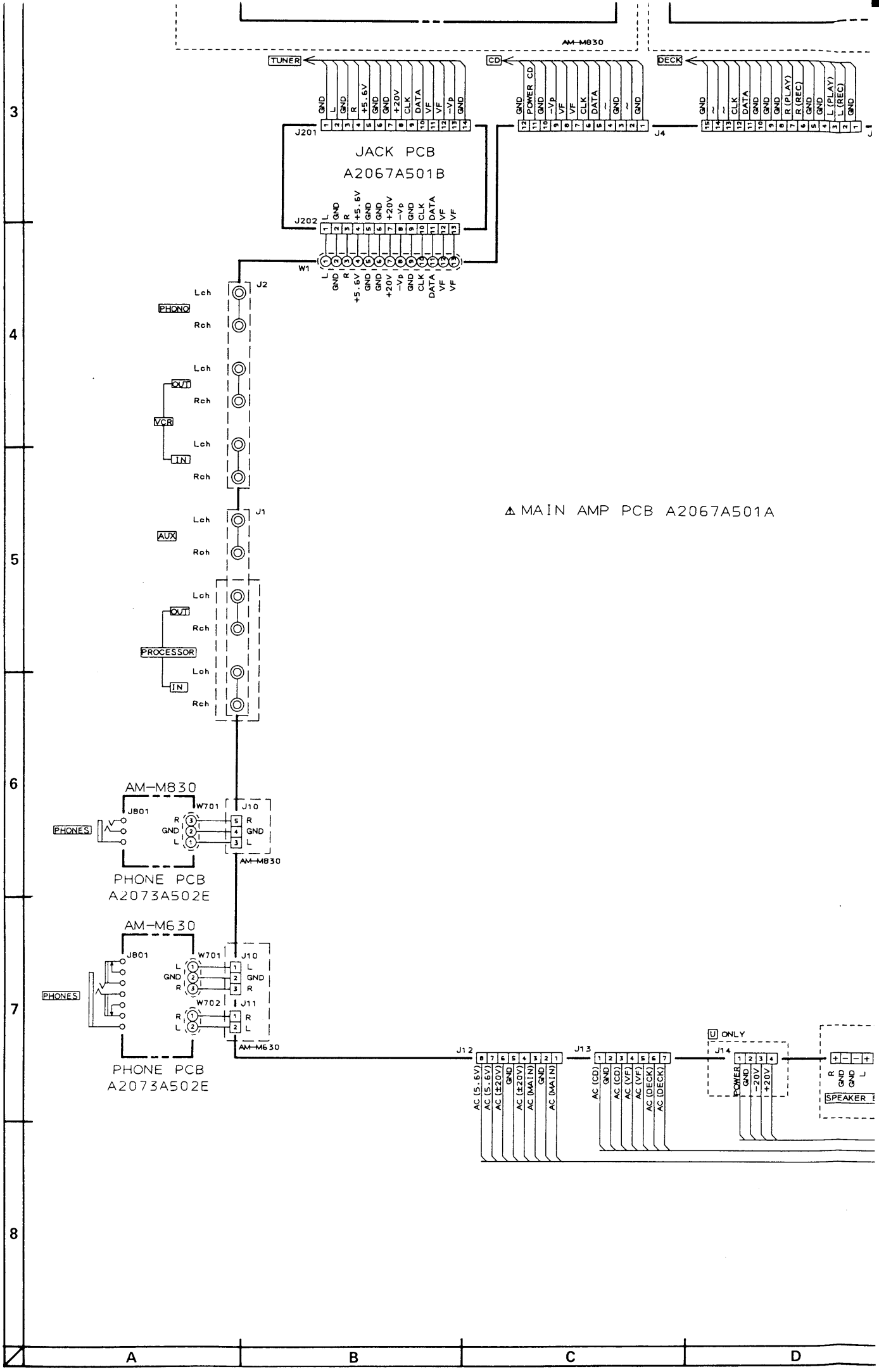
AM-M830
TUNER
CD
DECK
J201
J202
JACK PCB
A2067A501B
W1
J4
J2
J1
PHONO
VCR
AUX
PROCESSOR
OUT
IN
Lch
Rch
⚠ MAIN AMP PCB A2067A501A
AM-M830
J801
W701
J10
PHONES
PHONE PCB
A2073A502E
AM-M630
W702
J11
J12
J13
J14
U ONLY
POWER
SPEAKER
AC (5.6V)
AC (±20V)
AC (MAIN)
AC (CD)
AC (VF)
AC (DECK)
3
4
5
6
7
8
A
B
C
D

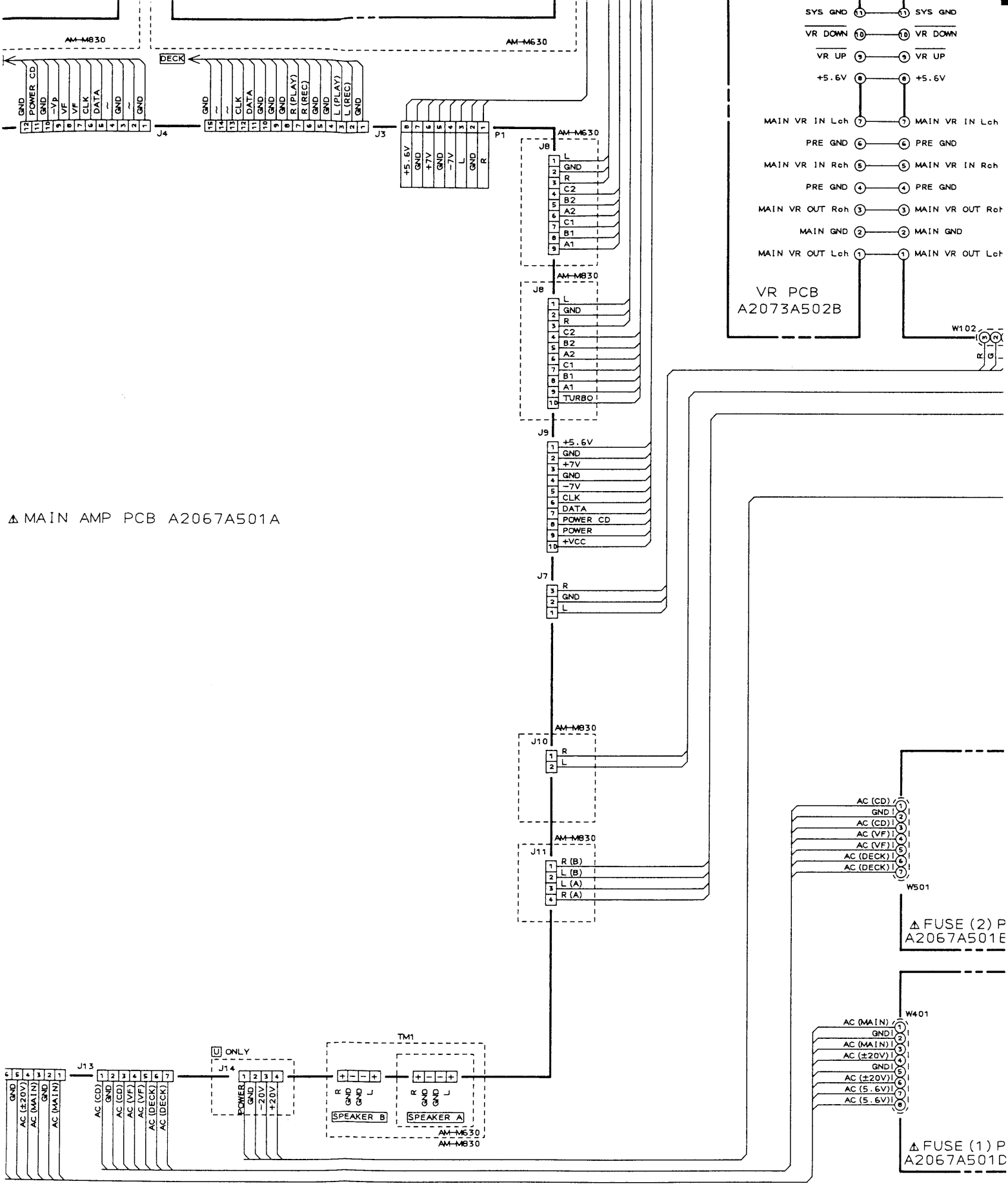
AM-M830
AM-M630
DECK
GND
POWER CD
GND
-Vp
VF
VF
CLK
DATA
~
GND
~
GND
J4
GND
~
~
CLK
DATA
GND
GND
GND
R (PLAY)
R (REC)
GND
GND
L (PLAY)
L (REC)
GND
J3
+5.6V
GND
+7V
GND
-7V
L
GND
R
P1
J8
L
GND
R
C2
B2
A2
C1
B1
A1
TURBO
J9
+5.6V
GND
+7V
GND
-7V
CLK
DATA
POWER CD
POWER
+VCC
J7
R
GND
L
J10
R
L
J11
R (B)
L (B)
L (A)
R (A)
SYS GND
VR DOWN
VR UP
+5.6V
MAIN VR IN Lch
PRE GND
MAIN VR IN Rch
PRE GND
MAIN VR OUT Rch
MAIN GND
MAIN VR OUT Lch
VR PCB
A2073A502B
W102
R
G
L
⚠MAIN AMP PCB A2067A501A
AC (CD)
GND
AC (CD)
AC (VF)
AC (VF)
AC (DECK)
AC (DECK)
W501
⚠FUSE (2) P
A2067A501E
W401
AC (MAIN)
GND
AC (MAIN)
AC (±20V)
GND
AC (±20V)
AC (5.6V)
AC (5.6V)
⚠FUSE (1) P
A2067A501D
J13
GND
AC (±20V)
AC (MAIN)
GND
AC (MAIN)
AC (CD)
GND
AC (CD)
AC (VF)
AC (VF)
AC (DECK)
AC (DECK)
U ONLY
J14
POWER
GND
-20V
+20V
TM1
SPEAKER B
SPEAKER A
AM-M630
AM-M830

C	D	E	F	G

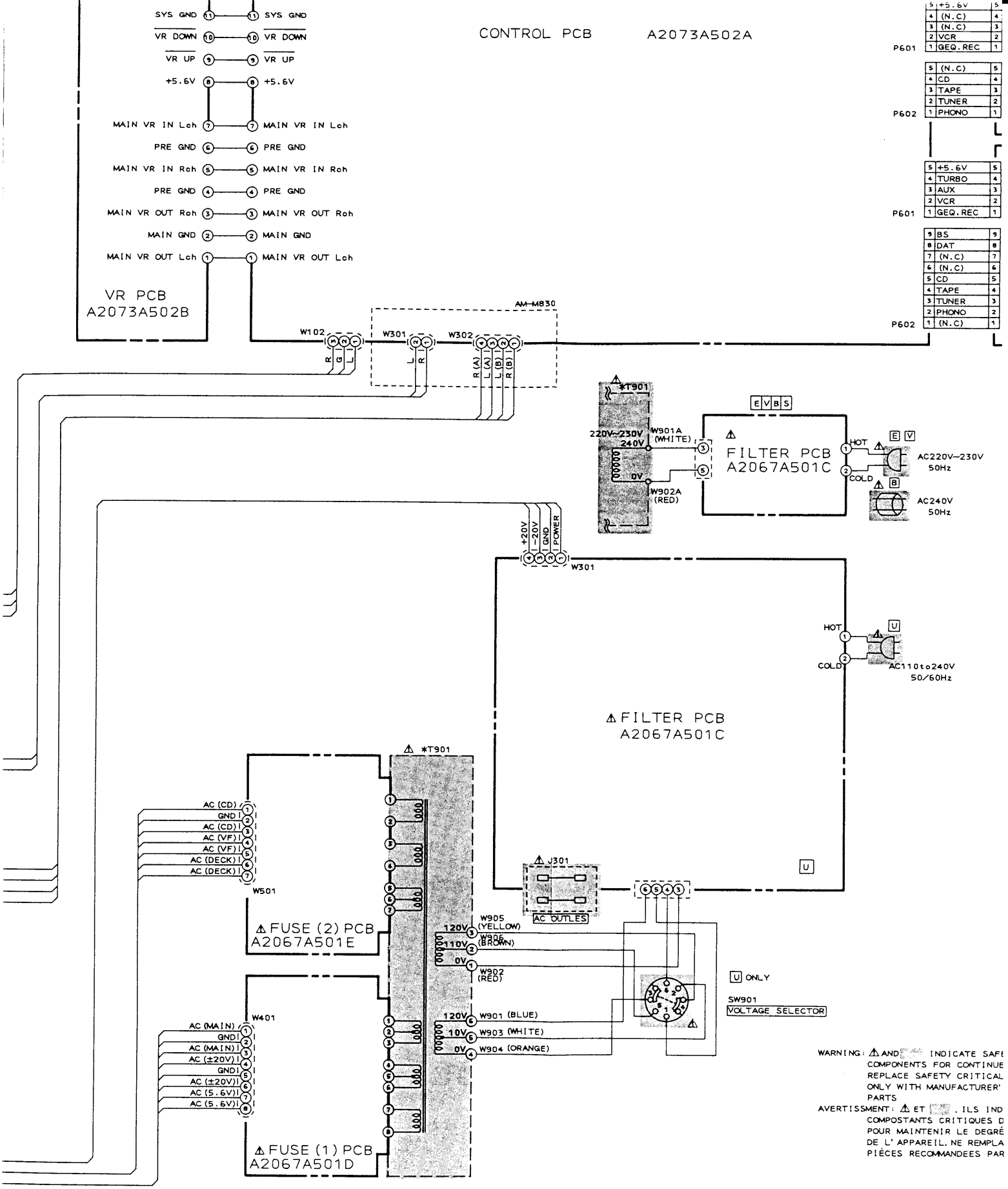
CONTROL PCB A2073A502A
SYS GND
VR DOWN
VR UP
+5.6V
MAIN VR IN Lch
PRE GND
MAIN VR IN Rch
PRE GND
MAIN VR OUT Rch
MAIN GND
MAIN VR OUT Lch
VR PCB
A2073A502B
P601
P602
(N.C)
CD
TAPE
TUNER
PHONO
VCR
GEQ.REC
AUX
TURBO
BS
DAT
AM-M830
W102
W301
W302
R G L
L R
R (A) L (A) L (B) R (B)
*T901
220V~230V
240V
0V
W901A (WHITE)
W902A (RED)
FILTER PCB
A2067A501C
HOT
COLD
AC220V~230V 50Hz
AC240V 50Hz
+20V
-20V
GND
POWER
AC110to240V 50/60Hz
AC (CD)
GND
AC (VF)
AC (DECK)
W501
FUSE (2) PCB
A2067A501E
J301
AC OUTLES
120V
110V
W905 (YELLOW)
W906 (BROWN)
W902 (RED)
U ONLY
SW901
VOLTAGE SELECTOR
W401
AC (MAIN)
AC (±20V)
AC (5.6V)
W901 (BLUE)
W903 (WHITE)
W904 (ORANGE)
FUSE (1) PCB
A2067A501D
WARNING: ⚠ AND INDICATE SAFE
COMPONENTS FOR CONTINUE
REPLACE SAFETY CRITICAL
ONLY WITH MANUFACTURER'
PARTS
AVERTISSMENT: ⚠ ET , ILS IND
COMPOSTANTS CRITIQUES D
POUR MAINTENIR LE DEGRÉ
DE L' APPAREIL, NE REMPLA
PIÈCES RECOMMANDEES PAR

F G H I J

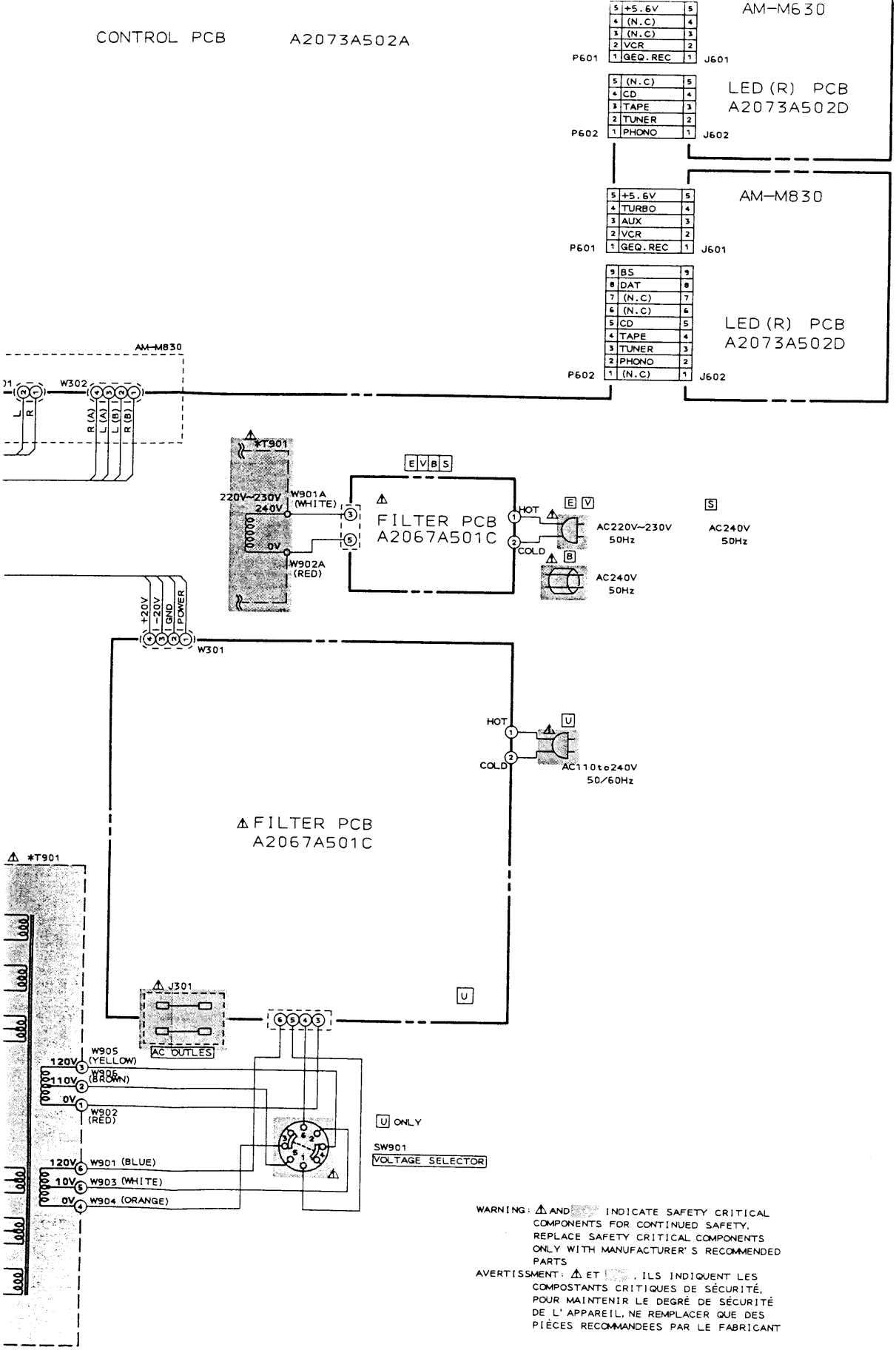

AM-M630/M830
CONNECTION DIAGRAM
No.5-1 A207301M

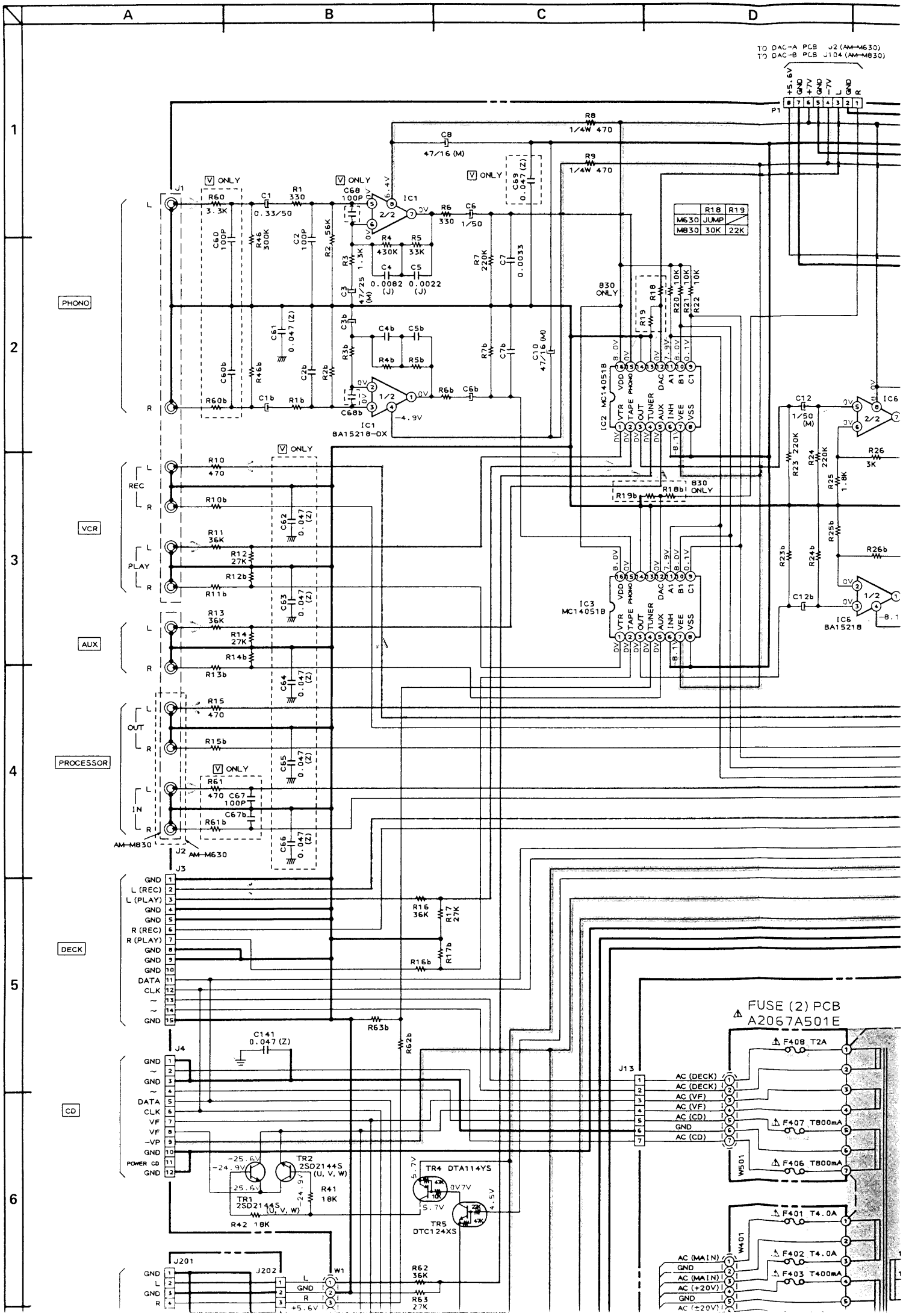
A
B
C
D
1
2
3
4
5
6
PHONO
VCR
AUX
PROCESSOR
DECK
CD
REC
PLAY
OUT
IN
V ONLY
830 ONLY
TO DAC-A PCB J2 (AM-M630)
TO DAC-B PCB J104 (AM-M830)
P1
J1
J2
J3
J4
J13
J201
J202
W1
W501
W401
IC1
BA15218-DX
IC2 MC14051B
IC3 MC14051B
IC6
BA15218
R18 R19
M630 JUMP
M830 30K 22K
FUSE (2) PCB
A2067A501E
F408 T2A
F407 T800mA
F406 T800mA
F401 T4.0A
F402 T4.0A
F403 T400mA
AC (DECK)
AC (VF)
AC (CD)
AC (MAIN)
AC (+20V)
TR1 2SD2144S (U, V, W)
TR2 2SD2144S (U, V, W)
TR4 DTA114YS
TR5 DTC124XS
POWER CD

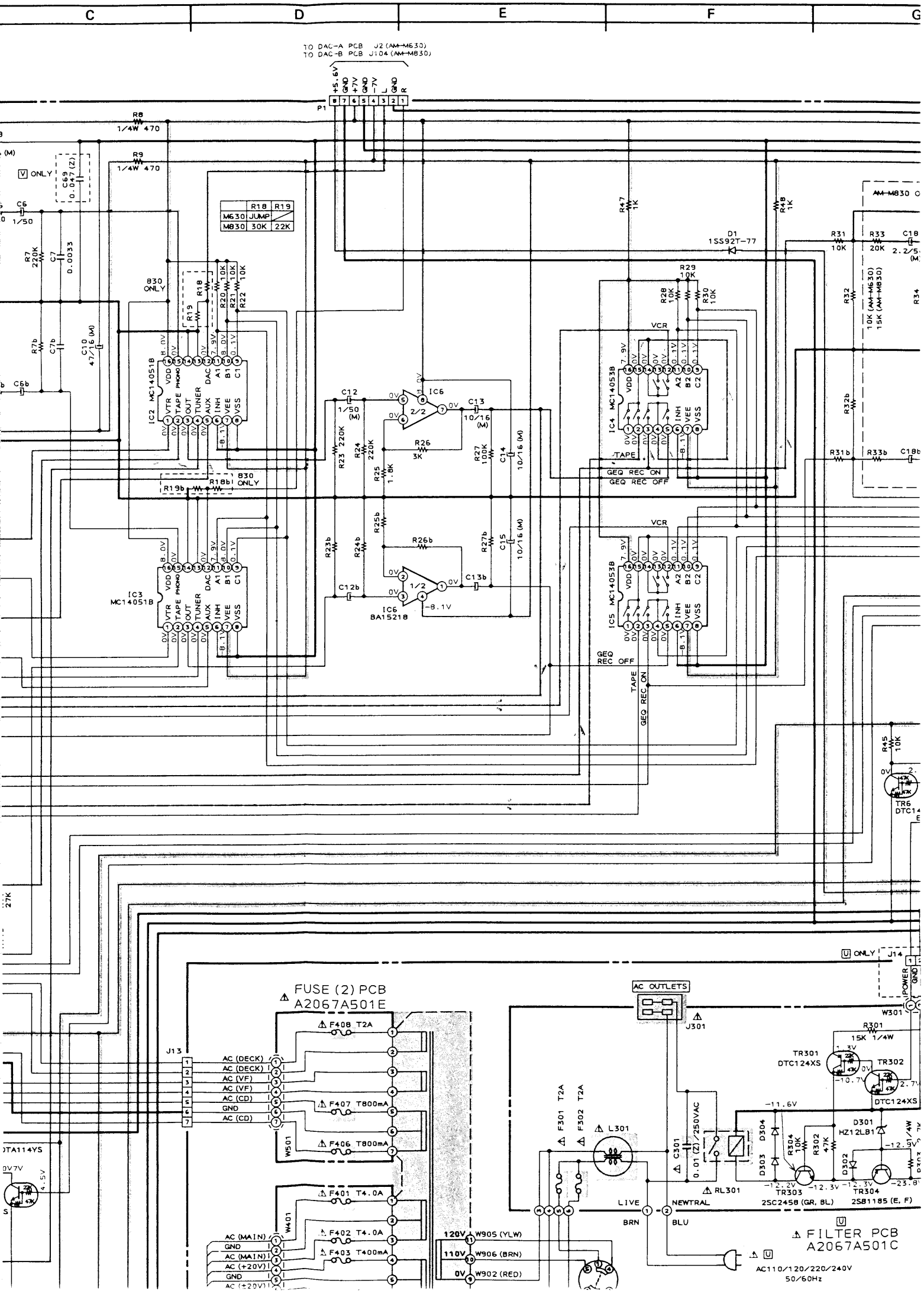
C
D
E
F
G
TO DAC-A PCB J2 (AM-M630)
TO DAC-B PCB J104 (AM-M830)
+5.6V GND +7V GND -7V L GND R
P1
R8 1/4W 470
R9 1/4W 470
V ONLY
C69 0.047 (Z)
C6 1/50
R7 220K
C7 0.0033
R7b
C7b
C10 47/16 (M)
C6b
R18 R19
M630 JUMP
M830 30K 22K
830 ONLY
R20 10K
R21 10K
R22 10K
IC2 MC14051B
VTR TAPE PHONO OUT TUNER AUX INH VEE VSS
VDD DAC A1 B1 C1
R18b
R19b
IC3 MC14051B
C12 1/50 (M)
IC6
2/2
C13 10/16 (M)
R26 3K
R23 220K
R24 220K
R25 1.8K
R27 100K
C14 10/16 (M)
R23b
R24b
R25b
R26b
R27b
C15 10/16 (M)
C12b
C13b
1/2
IC6 BA15218
-8.1V
R47 1K
R48 1K
D1 1SS92T-77
R29 10K
R28 10K
R30 10K
VCR
IC4 MC14053B
IC5 MC14053B
TAPE
GEQ REC ON
GEQ REC OFF
R31 10K
R33 20K
C18 2.2/5 (M)
R32
R32b
R31b
R33b
C18b
AM-M830
R34 10K (AM-M630) 15K (AM-M830)
R45 10K
TR6 DTC14
U ONLY
J14
POWER GND
W301
FUSE (2) PCB
A2067A501E
F408 T2A
F407 T800mA
F406 T800mA
F401 T4.0A
F402 T4.0A
F403 T400mA
J13
AC (DECK)
AC (DECK)
AC (VF)
AC (VF)
AC (CD)
GND
AC (CD)
W501
W401
AC (MAIN)
GND
AC (MAIN)
AC (+20V)
GND
AC (±20V)
120V W905 (YLW)
110V W906 (BRN)
0V W902 (RED)
AC OUTLETS
J301
R301 15K 1/4W
TR301 DTC124XS
TR302 DTC124XS
F301 T2A
F302 T2A
L301
C301 0.01 (Z)/250VAC
RL301
D304
D303
R304 10K
R302 47K
D301 HZ12LB1
D302
TR303 2SC2458 (GR, BL)
TR304 2SB1185 (E, F)
LIVE
NEWTRAL
BRN
BLU
FILTER PCB
A2067A501C
AC110/120/220/240V
50/60Hz

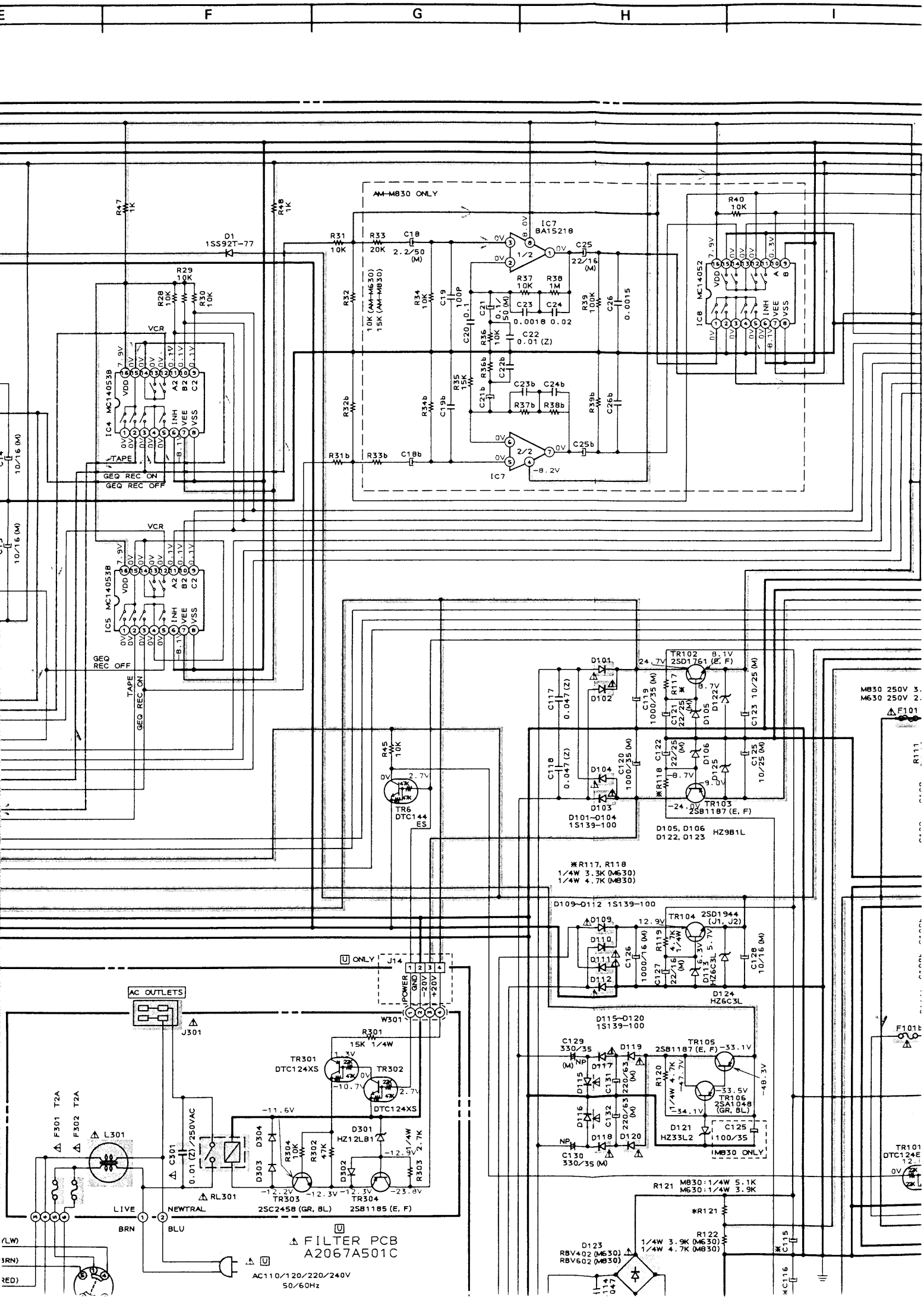
E
F
G
H
I
AM-M830 ONLY
IC7
BA15218
1/2
2/2
-8.2V
R31
10K
R33
20K
C18
2.2/50
(M)
C25
22/16
(M)
R32
10K (AM-M630)
15K (AM-M830)
R34
10K
C19
100P
R37
10K
R38
1M
C23
C24
0.0018
0.02
C22
0.01 (Z)
R39
100K
C26
0.0015
R35
15K
R36
10K
C20
0.1
C21
0.1/50 (M)
R32b
R34b
C19b
R36b
C22b
C21b
C23b
C24b
R37b
R38b
R39b
C26b
R31b
R33b
C18b
C25b
R40
10K
IC8 MC14052
VDD
INH
VEE
VSS
A
B
R47
1K
R48
1K
D1
1SS92T-77
R29
10K
R28
10K
R30
10K
VCR
IC4 MC14053B
IC5 MC14053B
A2
B2
C2
TAPE
GEQ REC ON
GEQ REC OFF
10/16 (M)
D101
D102
D103
D104
TR102
2SD1761 (E, F)
TR103
2SB1187 (E, F)
C117
0.047 (Z)
C118
0.047 (Z)
C119
1000/35 (M)
C120
1000/35 (M)
C121
22/25 (M)
C122
22/25 (M)
C123
10/25 (M)
C125
10/25 (M)
R117
R118
D105
D106
D122
D125
D101~D104
1S139-100
D105, D106
D122, D123
HZ9B1L
R45
10K
TR6
DTC144
ES
M830 250V 3.
M630 250V 2.
F101
*R117, R118
1/4W 3.3K (M630)
1/4W 4.7K (M830)
D109~D112 1S139-100
TR104 2SD1944
(J1, J2)
D109
D110
D111
D112
C126
1000/16 (M)
R119
4.7K 1/4W
C127
22/16 (M)
D113
HZ6C3L
C128
10/16 (M)
D124
HZ6C3L
D115~D120
1S139-100
C129
330/35
(M)
D119
D117
D115
C131
220/63 (M)
TR105
2SB1187 (E, F)
R120
4.7K 1/4W
TR106
2SA1048
(GR, BL)
D116
C132
220/63 (M)
D118
D120
C130
330/35 (M)
D121
HZ33L2
C125
100/35
(M830 ONLY)
F101b
TR101
DTC124E
R121
M830:1/4W 5.1K
M630:1/4W 3.9K
*R121
R122
1/4W 3.9K (M630)
1/4W 4.7K (M830)
D123
RBV402 (M630)
RBV602 (M830)
*C115
*C116
U ONLY
J14
POWER
GND
-20V
+20V
W301
AC OUTLETS
J301
R301
15K 1/4W
TR301
DTC124XS
TR302
DTC124XS
D301
HZ12LB1
R302
47K
R303
2.7K
R304
10K
D302
D303
D304
TR303
2SC2458 (GR, BL)
TR304
2SB1185 (E, F)
F301 T2A
F302 T2A
L301
C301
0.01 (Z)/250VAC
RL301
LIVE
NEWTRAL
BRN
BLU
FILTER PCB
A2067A501C
AC110/120/220/240V
50/60Hz

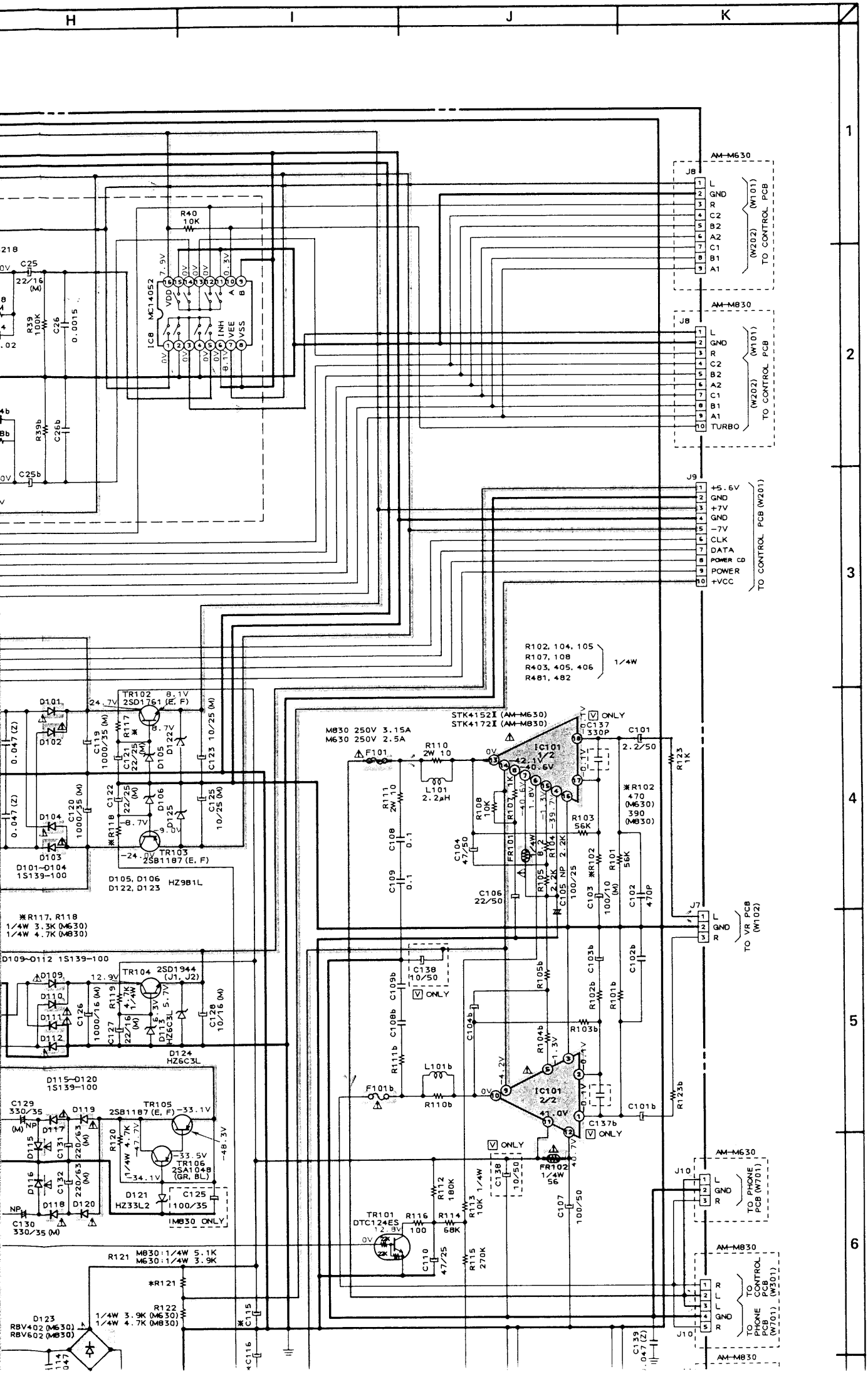
H
I
J
K
1
2
3
4
5
6
AM-M630
J8
L
GND
R
C2
B2
A2
C1
B1
A1
(W101)
(W202)
TO CONTROL PCB
AM-M830
J8
L
GND
R
C2
B2
A2
C1
B1
A1
TURBO
(W101)
(W202)
TO CONTROL PCB
J9
+5.6V
GND
+7V
GND
-7V
CLK
DATA
POWER CD
POWER
+VCC
TO CONTROL PCB (W201)
R40
10K
IC8 MC14052
VDD
INH
VEE
VSS
C25
22/16
(M)
R39
100K
C26
0.0015
R39b
C26b
C25b
R102, 104, 105
R107, 108
R403, 405, 406
R481, 482
1/4W
STK4152Ⅱ (AM-M630)
STK4172Ⅱ (AM-M830)
M830 250V 3.15A
M630 250V 2.5A
F101
R110
2W 10
L101
2.2μH
IC101
1/2
42.1V
40.6V
C137
330P
C101
2.2/50
R123
1K
R102
470
(M630)
390
(M830)
R103
56K
R101
56K
R102
C102
470P
C103
100/10
(M)
C105 NP 2.2K
C106
22/50
C104
47/50
R108
10K
R107
1K
R105
2.2K
R104
2.2K
FR101
R111
2W 10
C108
0.1
C109
0.1
TR102
2SD1761 (E, F)
8.1V
24.7V
8.7V
D101
D102
D103
D104
D105
D106
D122
D125
C119
1000/35 (M)
C120
1000/35 (M)
C121
22/25
(M)
C122
22/25
(M)
C123 10/25 (M)
C125
10/25 (M)
R117
R118
-8.7V
-24.0V
TR103
2SB1187 (E, F)
D101-D104
1S139-100
D105, D106
D122, D123
HZ9B1L
※R117, R118
1/4W 3.3K (M630)
1/4W 4.7K (M830)
D109-D112 1S139-100
TR104
2SD1944
(J1, J2)
12.9V
D109
D110
D111
D112
C126
1000/16 (M)
R119
4.7K
1/4W
C127
22/16
(M)
D113
HZ6C3L
5.7V
C128
10/16 (M)
D124
HZ6C3L
D115-D120
1S139-100
C129
330/35
(M)
NP
D119
D117
D115
C131
220/63
(M)
D116
C132
220/63
(M)
D118
D120
NP
C130
330/35 (M)
TR105
2SB1187 (E, F)
-33.1V
-47.7V
-48.3V
R120
1/4W 4.7K
-33.5V
TR106
2SA1048
(GR, BL)
-34.1V
D121
HZ33L2
C125
1100/35
(M830 ONLY)
C138
10/50
V ONLY
C138
10/50
C137b
V ONLY
V ONLY
L101b
F101b
R110b
IC101
2/2
41.0V
R105b
R102b
R101b
R103b
R104b
C104b
C109b
C108b
R111b
C103b
C102b
C101b
R125b
J7
L
GND
R
TO VR PCB (W102)
FR102
1/4W
56
R112
180K
R113
10K
1/4W
R114
68K
R116
100
TR101
DTC124ES
12.8V
C110
47/25
R115
270K
C107
100/50
AM-M630
J10
L
GND
R
TO PHONE PCB (W701)
AM-M830
J10
R
L
L
GND
R
TO CONTROL PCB (W301)
TO PHONE PCB (W701)
R121
M830:1/4W 5.1K
M630:1/4W 3.9K
※R121
R122
1/4W 3.9K (M630)
1/4W 4.7K (M830)
D123
RBV402 (M630)
RBV602 (M830)
C115
※C116
C139
.047 (Z)

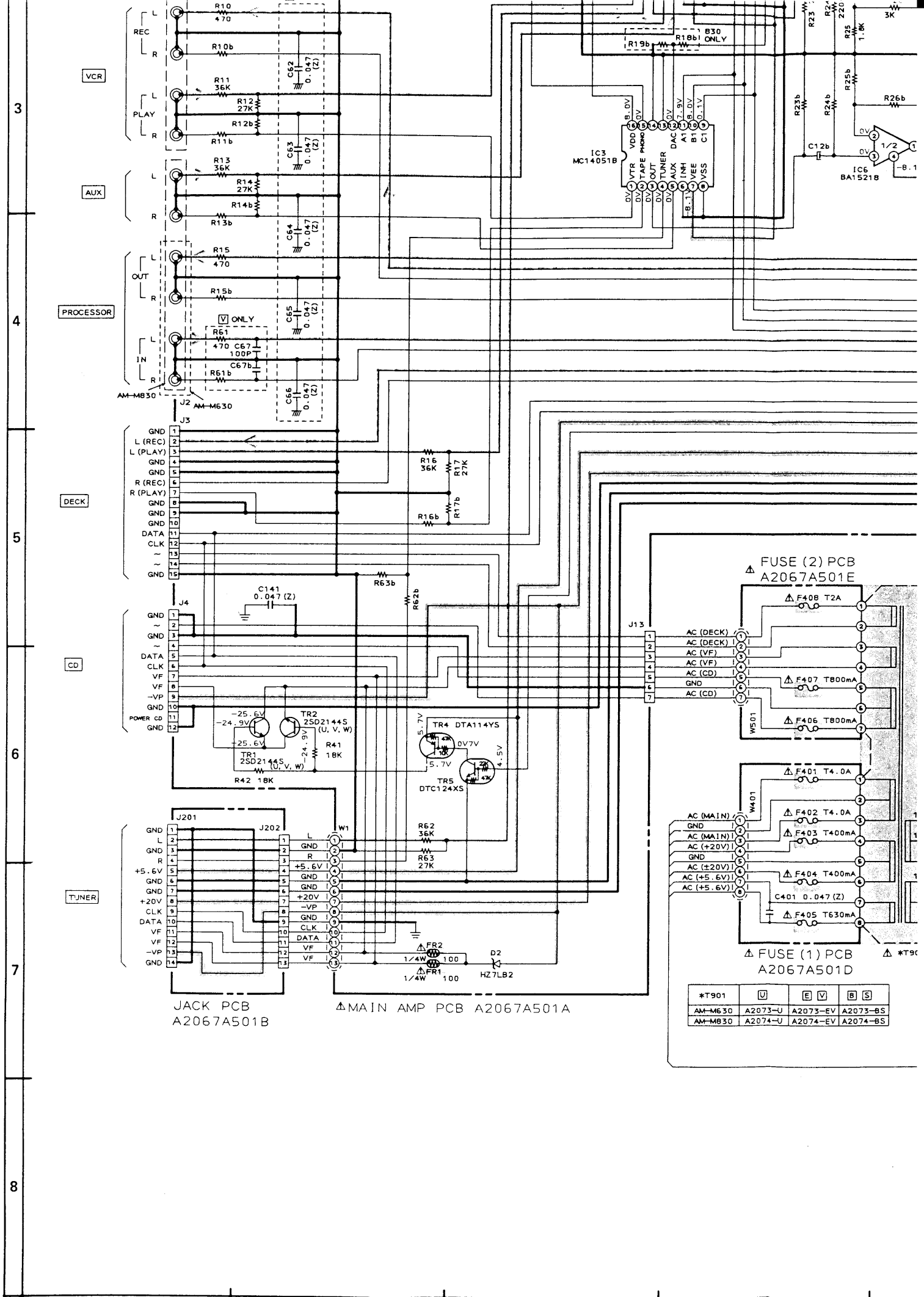

*T901	U	E V	B S
AM-M630	A2073-U	A2073-EV	A2073-BS
AM-M830	A2074-U	A2074-EV	A2074-BS

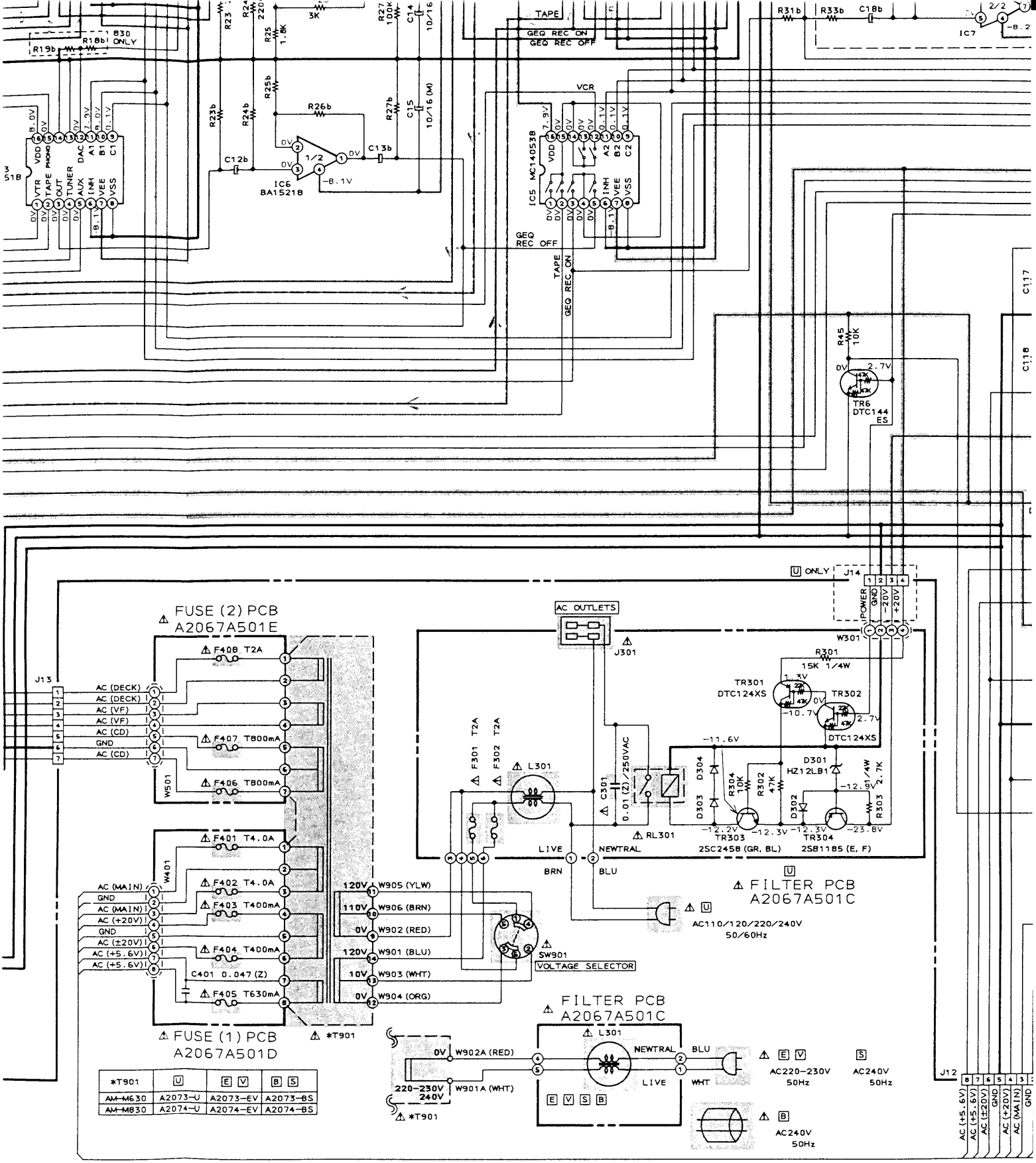

*T901	U	E V	B S
AM-M630	A2073-U	A2073-EV	A2073-BS
AM-M830	A2074-U	A2074-EV	A2074-BS

D E F G

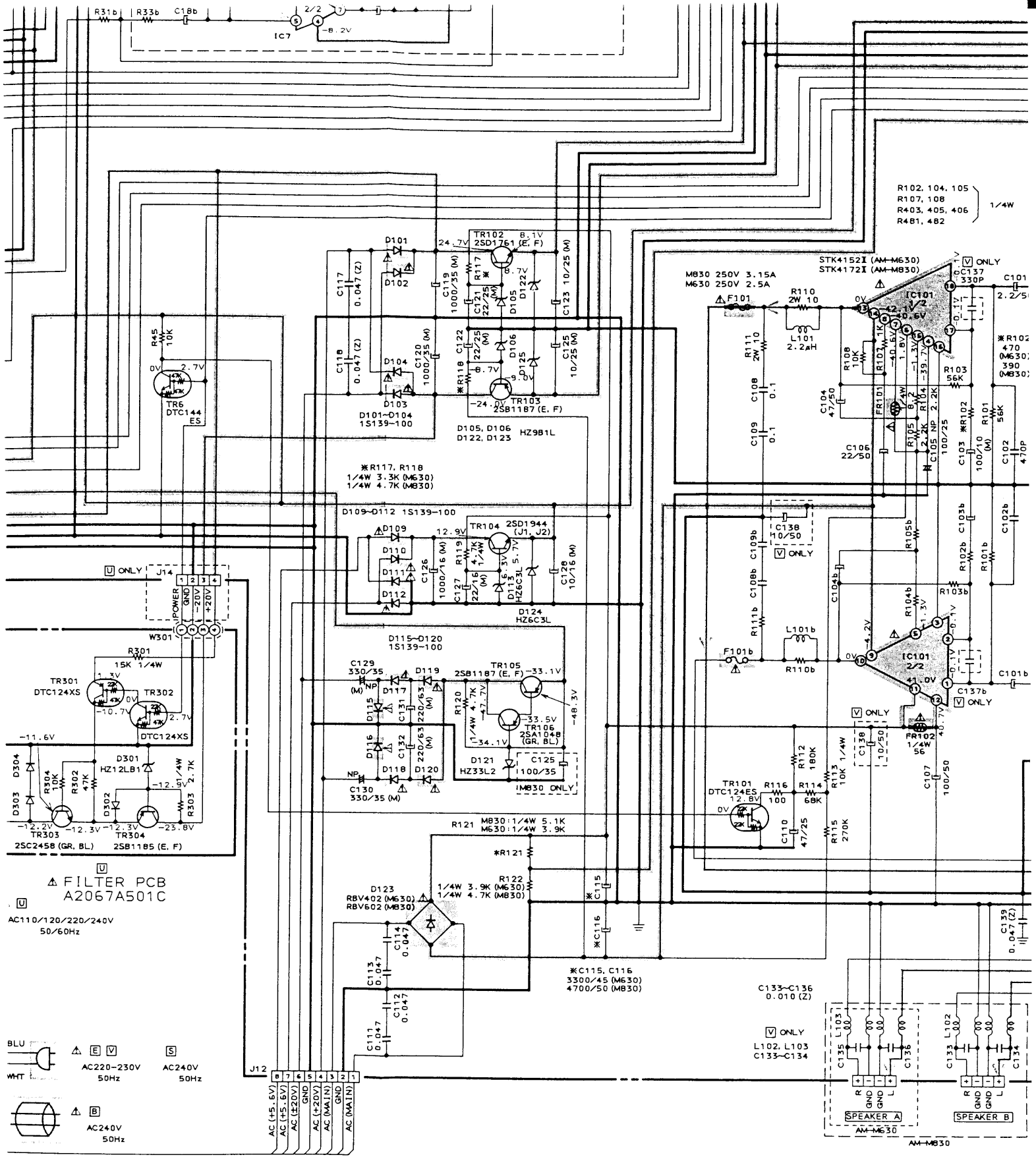

'ER SUPPLY) LINE

L LINE

IGNAL LINE

WARNING: ⚠ AND INDICATE SAFETY CRITICAL COMPONENTS FOR CONTINUED SAFETY. REPLACE SAFETY CRITICAL COMPONENTS ONLY WITH MANUFACTURER'S RECOMMENDED PARTS

AVERTISSMENT: ⚠ ET , ILS INDIQUENT LES COMPOSTANTS CRITIQUES DE SÉCURITÉ. POUR MAINTENIR LE DEGRÉ DE SÉCURITÉ DE L' APPAREIL, NE REMPLACER QUE DES PIÈCES RECOMMANDEES PAR LE FABRICANT

INDICATED VOLTAGES WERE MEASURED WHEN NO SIGNAL WAS BEING INPUT. (FUNCTION: CD MODE)

NOTE
UNLESS OTHERWISE SPECIFIED
ALL RESISTORS IN OHMS 1/6W (J)
ALL CAPACITORS IN μF 50WV (M)
ALL DIODES ARE 1SS131

AM-M630/M8
MAIN AMP
SCHEMATIC

No.5-2 /

G H I J

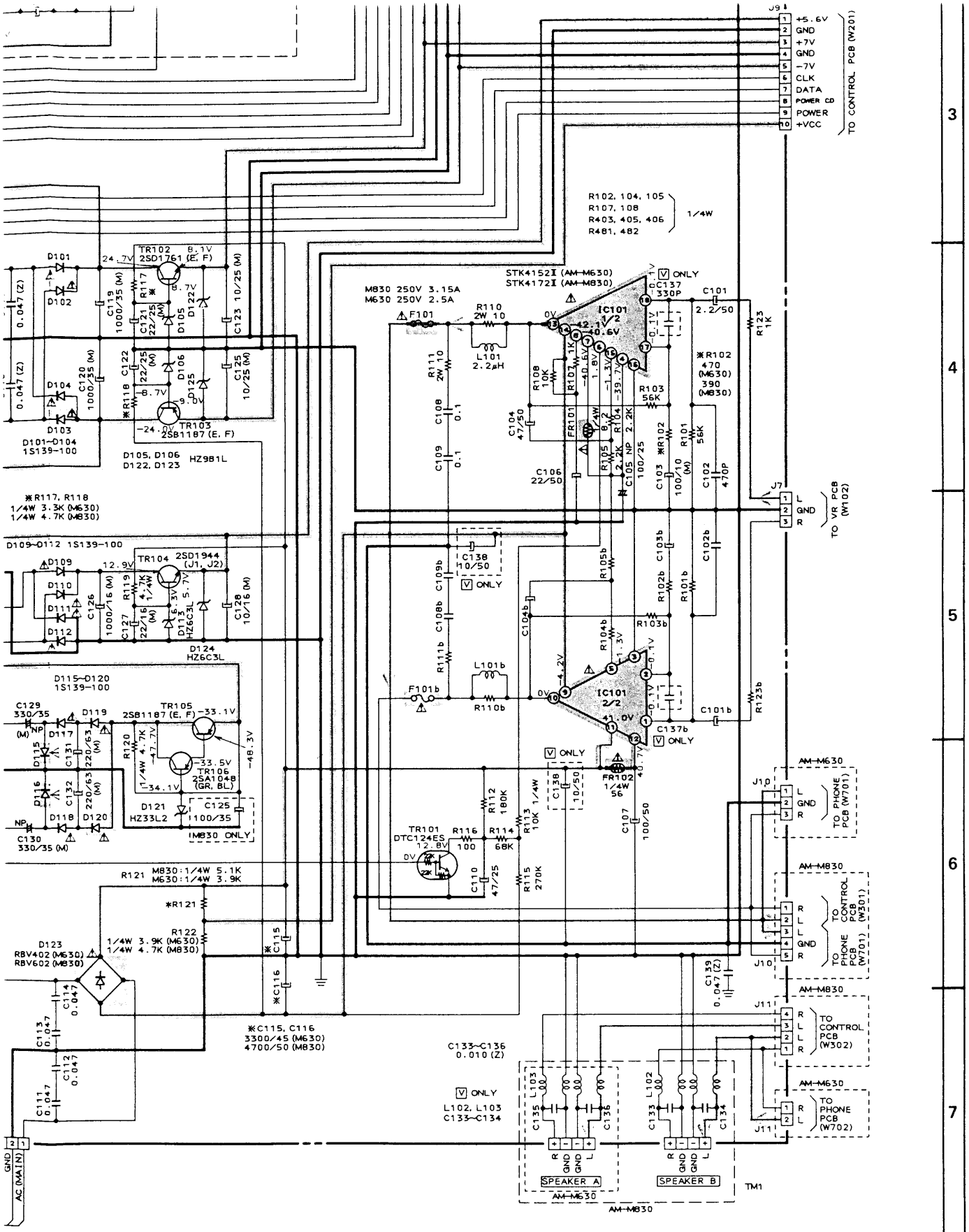

WARNING: ⚠ AND INDICATE SAFETY CRITICAL COMPONENTS FOR CONTINUED SAFETY. REPLACE SAFETY CRITICAL COMPONENTS ONLY WITH MANUFACTURER'S RECOMMENDED PARTS

AVERTISSMENT: ⚠ ET , ILS INDIQUENT LES COMPOSTANTS CRITIQUES DE SÉCURITÉ. POUR MAINTENIR LE DEGRÉ DE SÉCURITÉ DE L'APPAREIL, NE REMPLACER QUE DES PIÈCES RECOMMANDEES PAR LE FABRICANT

INDICATED VOLTAGES WERE MEASURED WHEN NO SIGNAL WAS BEING INPUT. (FUNCTION: CD MODE)

NOTE
UNLESS OTHERWISE SPECIFIED
ALL RESISTORS IN OHMS 1/6W (J)
ALL CAPACITORS IN μF 50WV (M)
ALL DIODES ARE 1SS131

AM-M630/M830 MAIN AMP SCHEMATIC DIAGRAM

No.5-2 A207302M

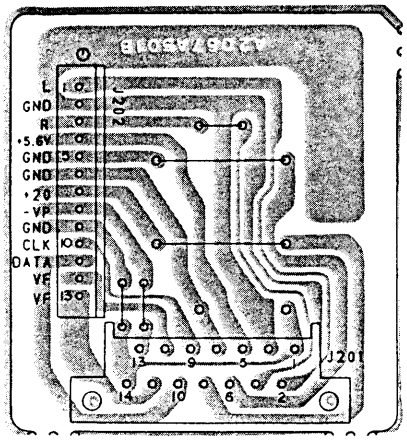

JACK PCB A2067A501B

PRINCIPAL PARTS LOCATION

TRANSISTORS	ICS
TR1.....F6	IC1.....A
TR4.....F6	IC2.....B
TR5.....F6	IC3.....A
TR6.....F2	IC4.....B
TR101.....E3	IC5.....A
TR102.....D1	IC6.....B
TR103.....E1	IC7.....A
TR104.....D5	IC8.....B
TR105.....F6	IC101.....D
TR106.....F5	

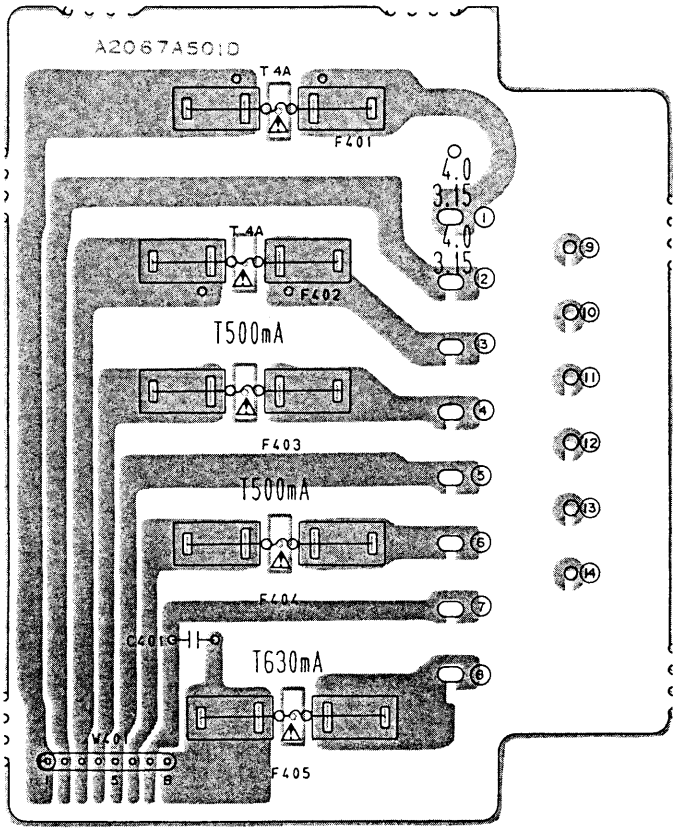

FUSE I PCB A2067A501D

* Indicated 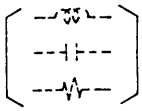 are

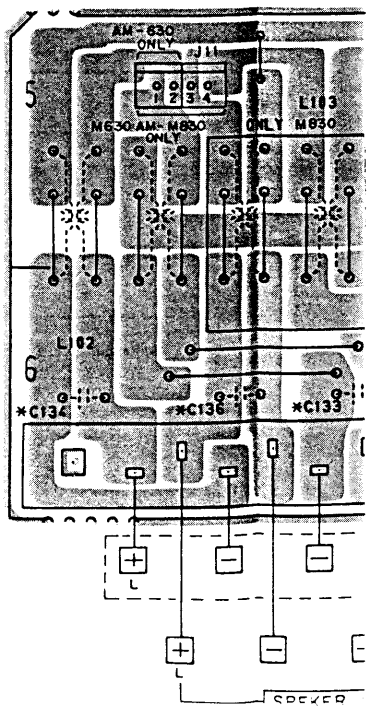

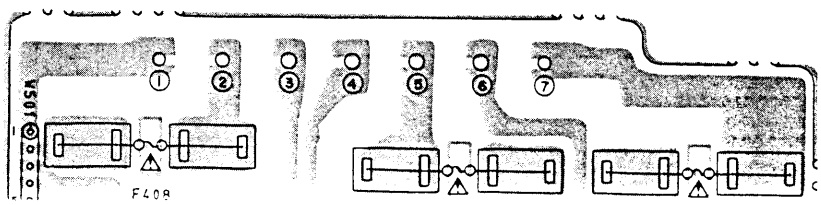

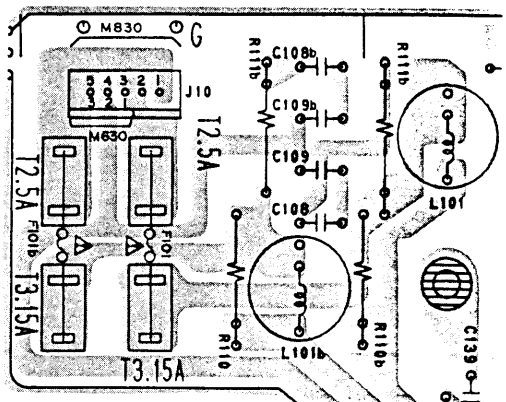

PRINCIPAL PARTS LOCATION

TRANSISTORS	ICS	WIRE
TR1.....F6	IC1.....A5	W1.....E5,6
TR4.....F6	IC2.....B4	
TR5.....F6	IC3.....A,B4	CONNECTORS
TR6.....F2	IC4.....B2	J1.....B6
TR101.....E3	IC5.....A3	J2.....C6
TR102.....D1	IC6.....B3	J3.....E6
TR103.....E1	IC7.....A1,2	J4.....F6
TR104.....D5	IC8.....B1,2	J7.....A1
TR105.....F6	IC101.....D3	J8.....B1
TR106.....F5		J9.....E,F1
		J10.....G1
		J11.....G6
		J12.....E4
		J13.....F4,5
		J14.....F4
		P1.....A3,4

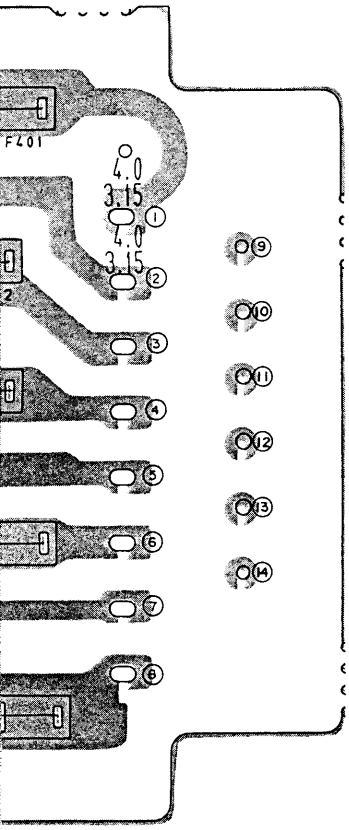

✳ Indicated 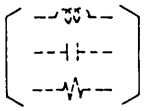 are V model only

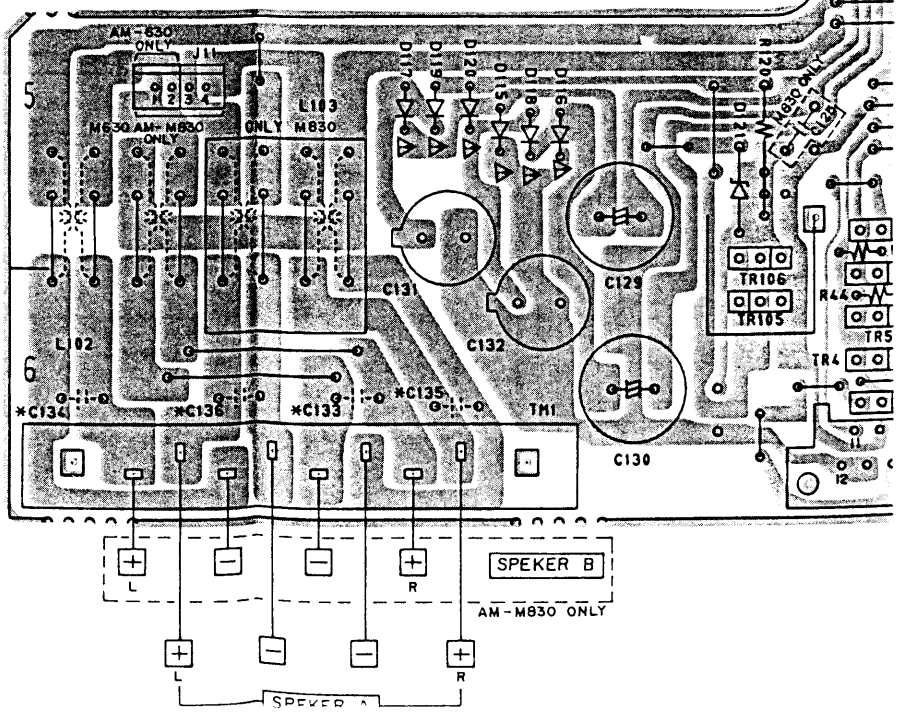

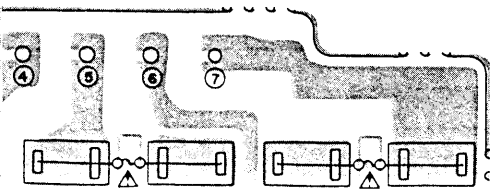

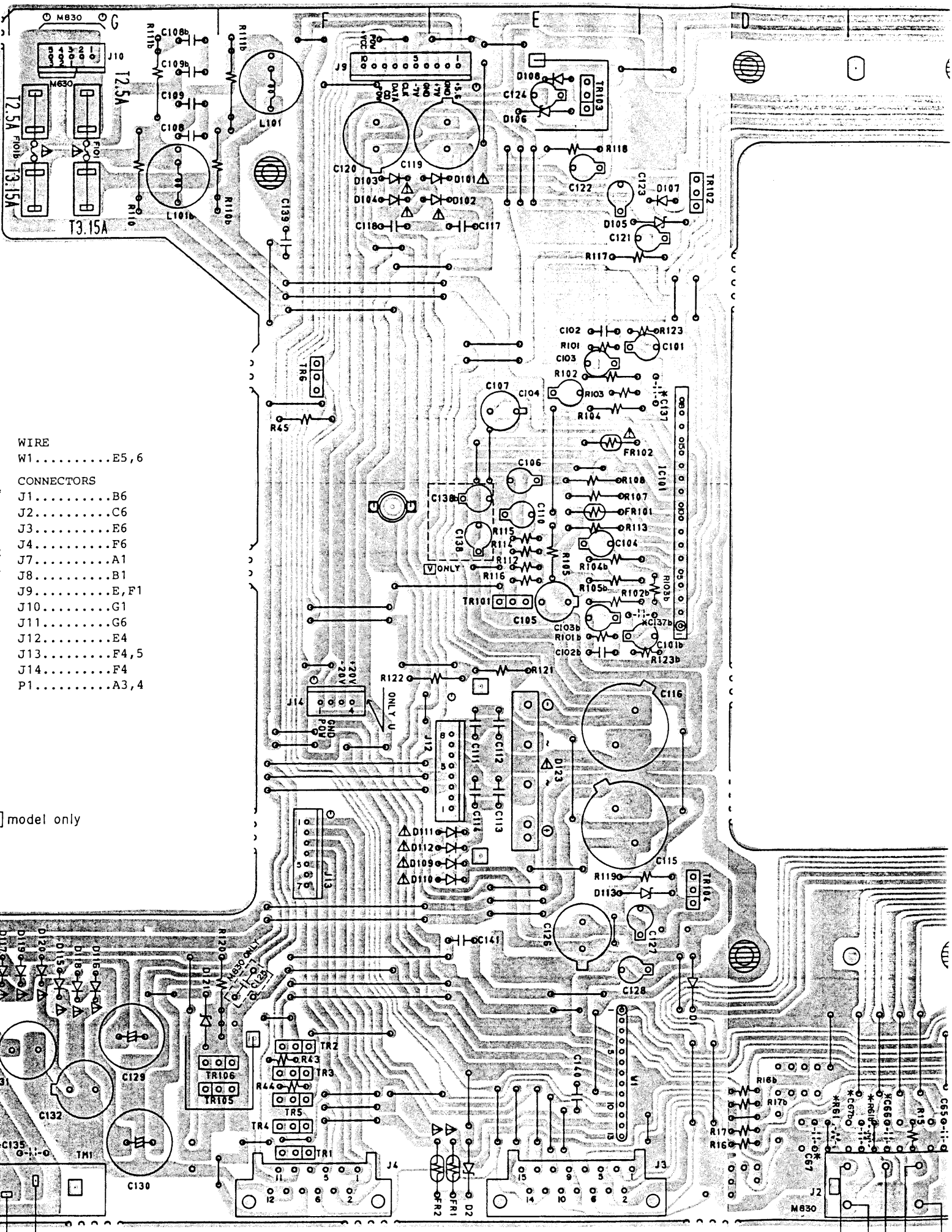

WIRE

W1.....E5,6

CONNECTORS

J1.....B6
J2.....C6
J3.....E6
J4.....F6
J7.....A1
J8.....B1
J9.....E,F1
J10.....G1
J11.....G6
J12.....E4
J13.....F4,5
J14.....F4
P1.....A3,4

] model only

MAIN AMP PCB A2067A501A

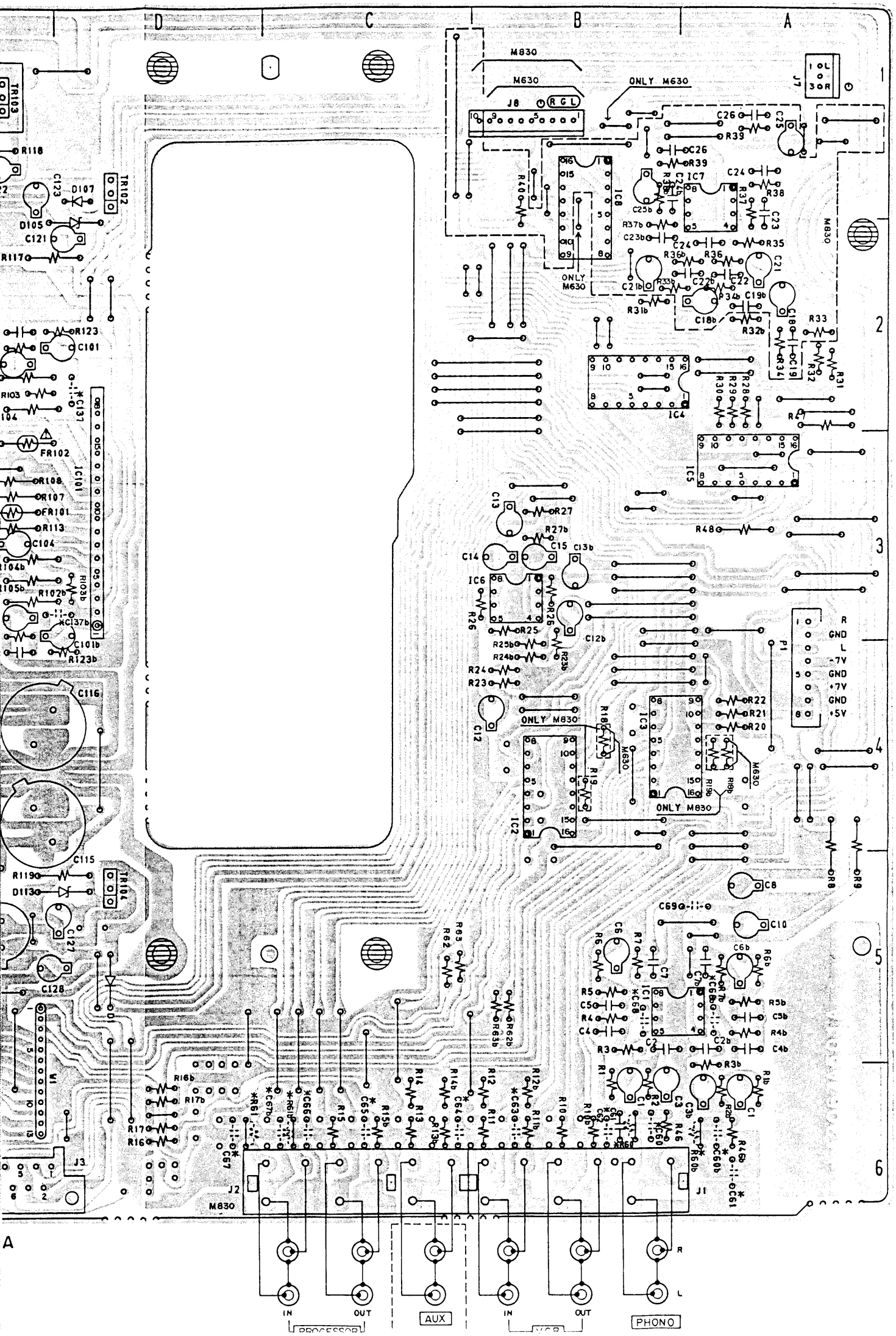
D
C
B
A
M830
M630
J8
R G L
ONLY M630
J7
L
R
TR103
TR102
TR104
R118
C123
D107
D105
C121
R117
R123
C101
R103
R104
C137
FR102
IC101
R108
R107
FR101
R113
C104
R104b
R105b
R102b
R103b
C137b
C101b
R123b
C116
C115
R119
D113
C127
C128
W1
J3
R16b
R17b
R17
R16
J2
M830
J1
IC8
IC7
IC4
IC5
IC6
IC3
IC2
IC1
P1
R
GND
L
-7V
GND
+7V
GND
+5V
IN
OUT
AUX
IN
OUT
PHONO

TR4.....F6	IC2.....
TR5.....F6	IC3.....
TR6.....F2	IC4.....
TR101.....E3	IC5.....
TR102.....D1	IC6.....
TR103.....E1	IC7.....
TR104.....D5	IC8.....
TR105.....F6	IC101.....
TR106.....F5	

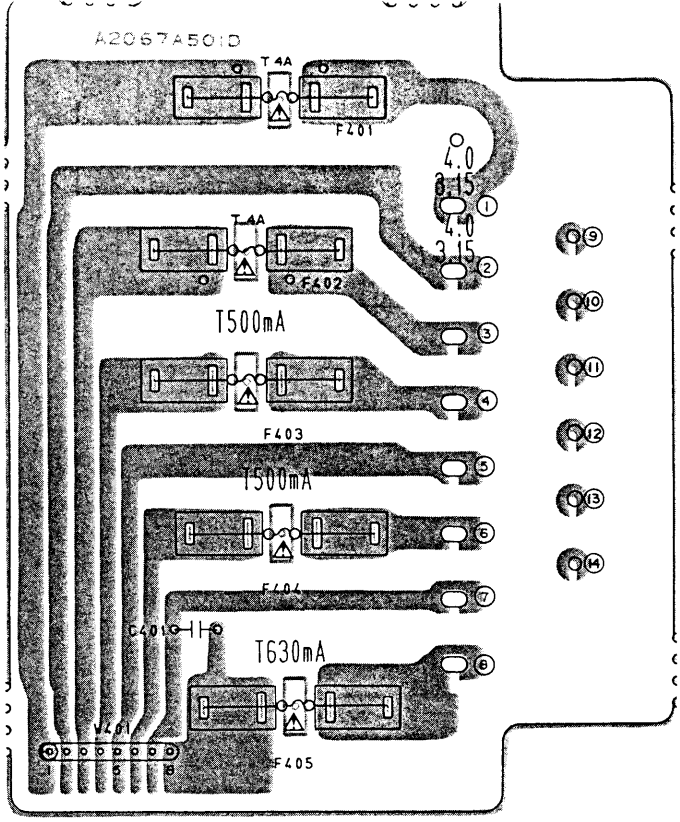

FUSE 1 PCB A2067A501D

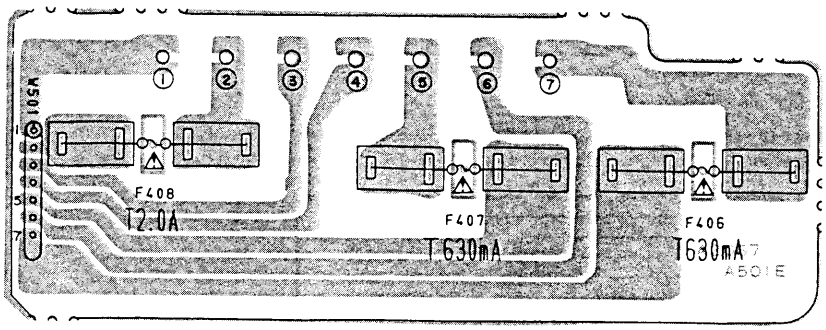

FUSE 2 PCB A2067A501E

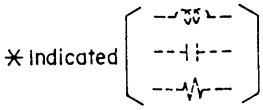

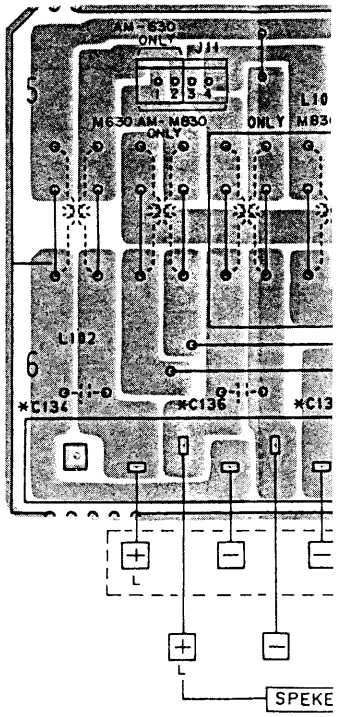

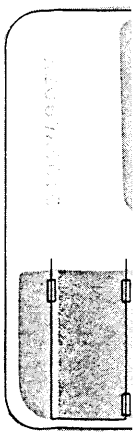

WARNING: ⚠ INDICATES SAFETY CRITICAL COMPONENTS FOR CONTINUED SAFETY, REPLACE SAFETY CRITICAL COMPONENTS ONLY WITH MANUFACTURER'S RECOMMENDED PARTS

AVERTISSEMENT: ⚠ IL INDIQUE LES COMPOSANTS CRITIQUES DE SÉCURITÉ. POUR MAINTENIR LE DEGRÉ DE SÉCURITÉ DE L'APPAREIL, NE REMPLACER QUE DES PIÈCES RECOMMANDEES PAR LE FABRICANT

TR4.....F6
TR5.....F6
TR6.....F2
TR101.....E3
TR102.....D1
TR103.....E1
TR104.....D5
TR105.....F6
TR106.....F5

IC2.....B4
IC3.....A,B4
IC4.....B2
IC5.....A3
IC6.....B3
IC7.....A1,2
IC8.....B1,2
IC101.....D3

CONNECTORS
J1.....B6
J2.....C6
J3.....E6
J4.....F6
J7.....A1
J8.....B1
J9.....E,F1
J10.....G1
J11.....G6
J12.....E4
J13.....F4,5
J14.....F4
P1.....A3,4

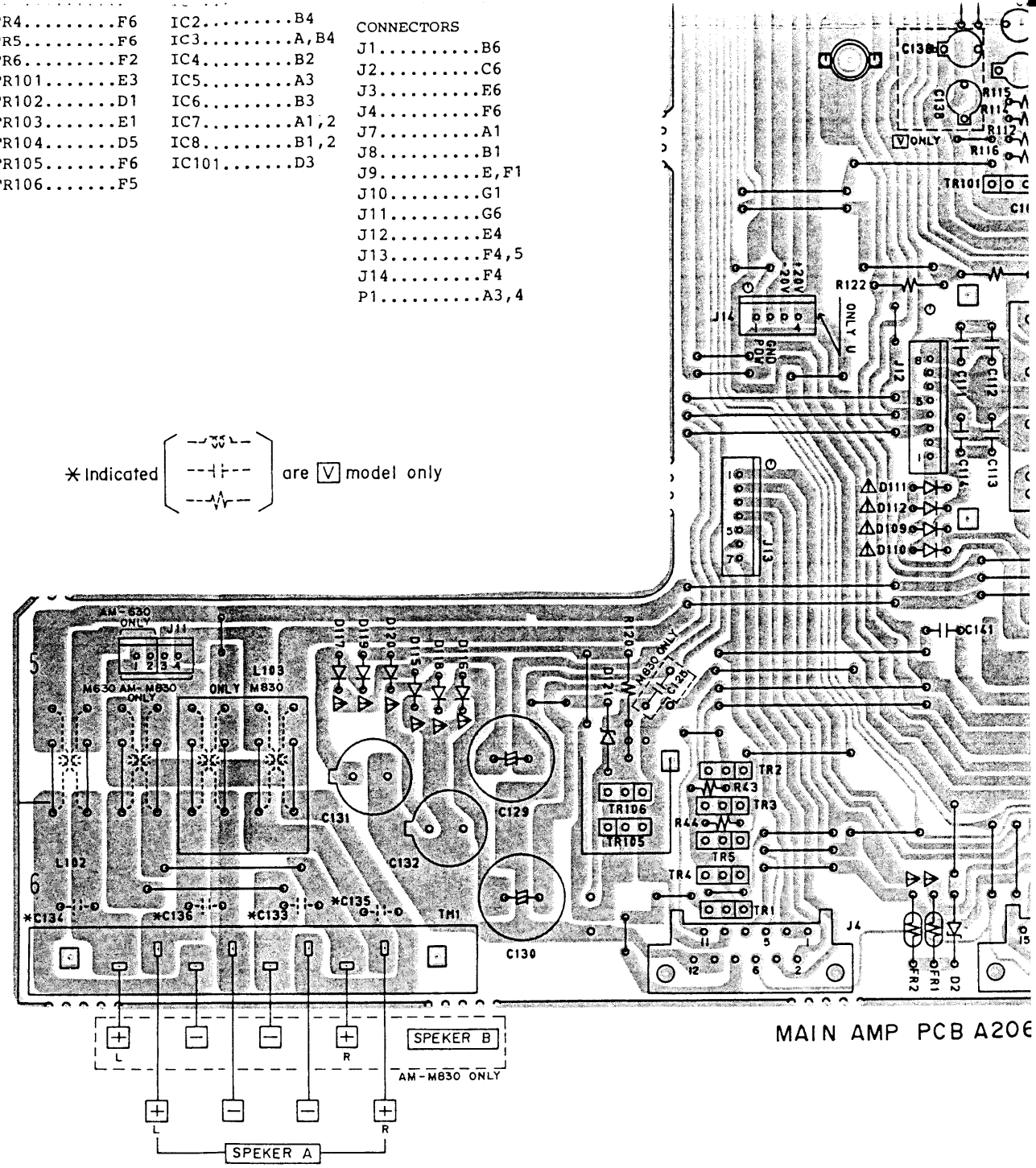

MAIN AMP PCB A206

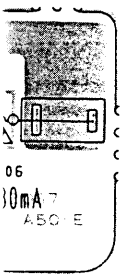

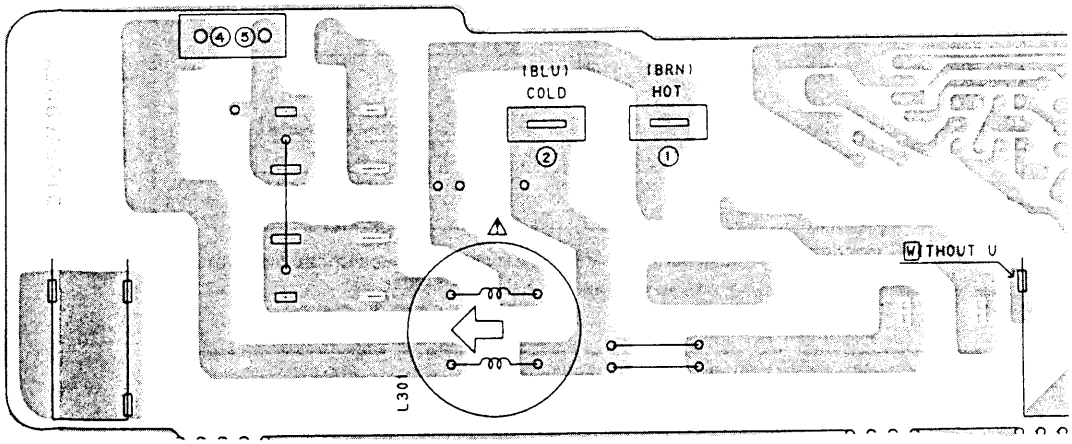

FILTER PCB A2067A501C B E V model

MAIN AMP PCB A2067A501A

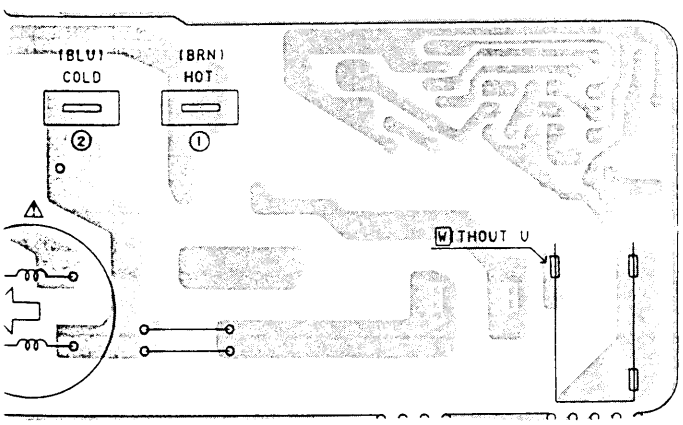

B A2067A501C B E V model

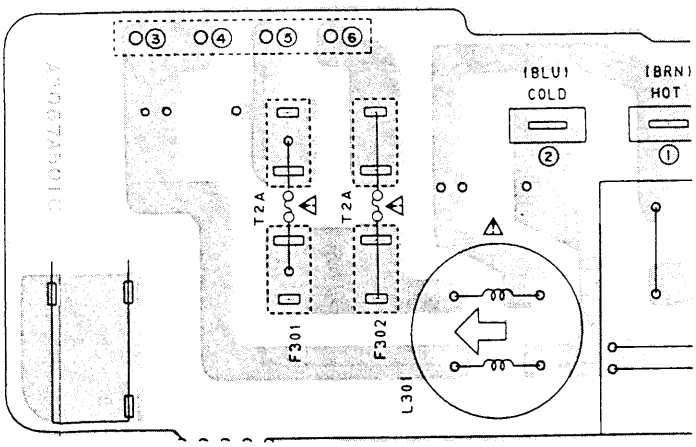

FILTER PCB A2067A5

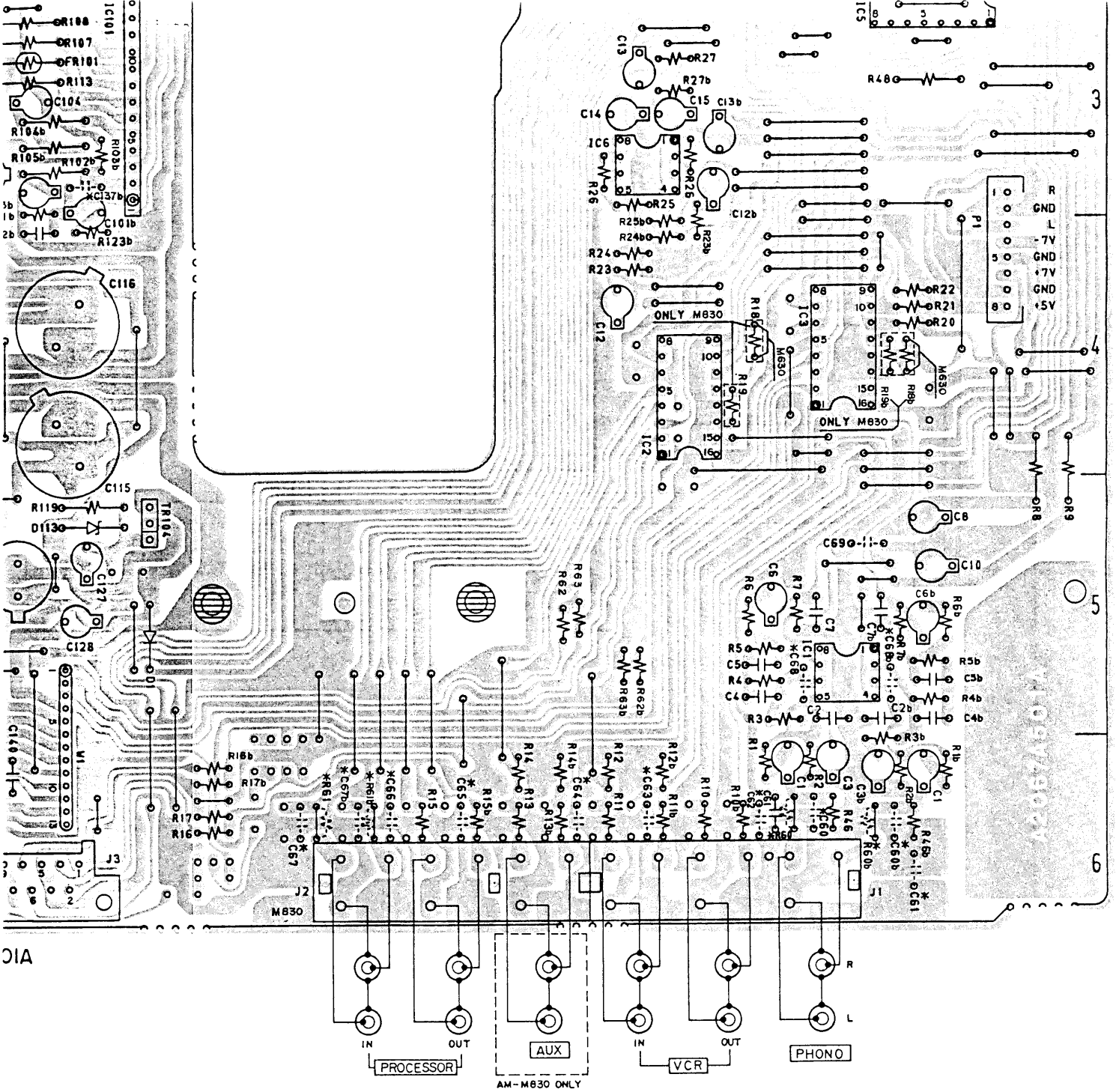

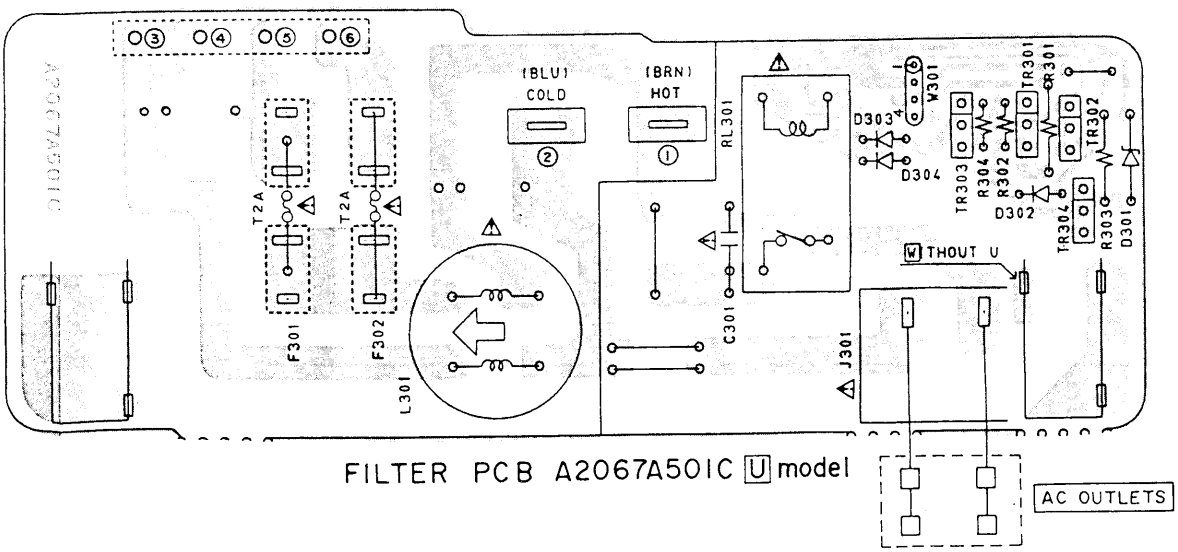

FILTER PCB A2067A501C U model

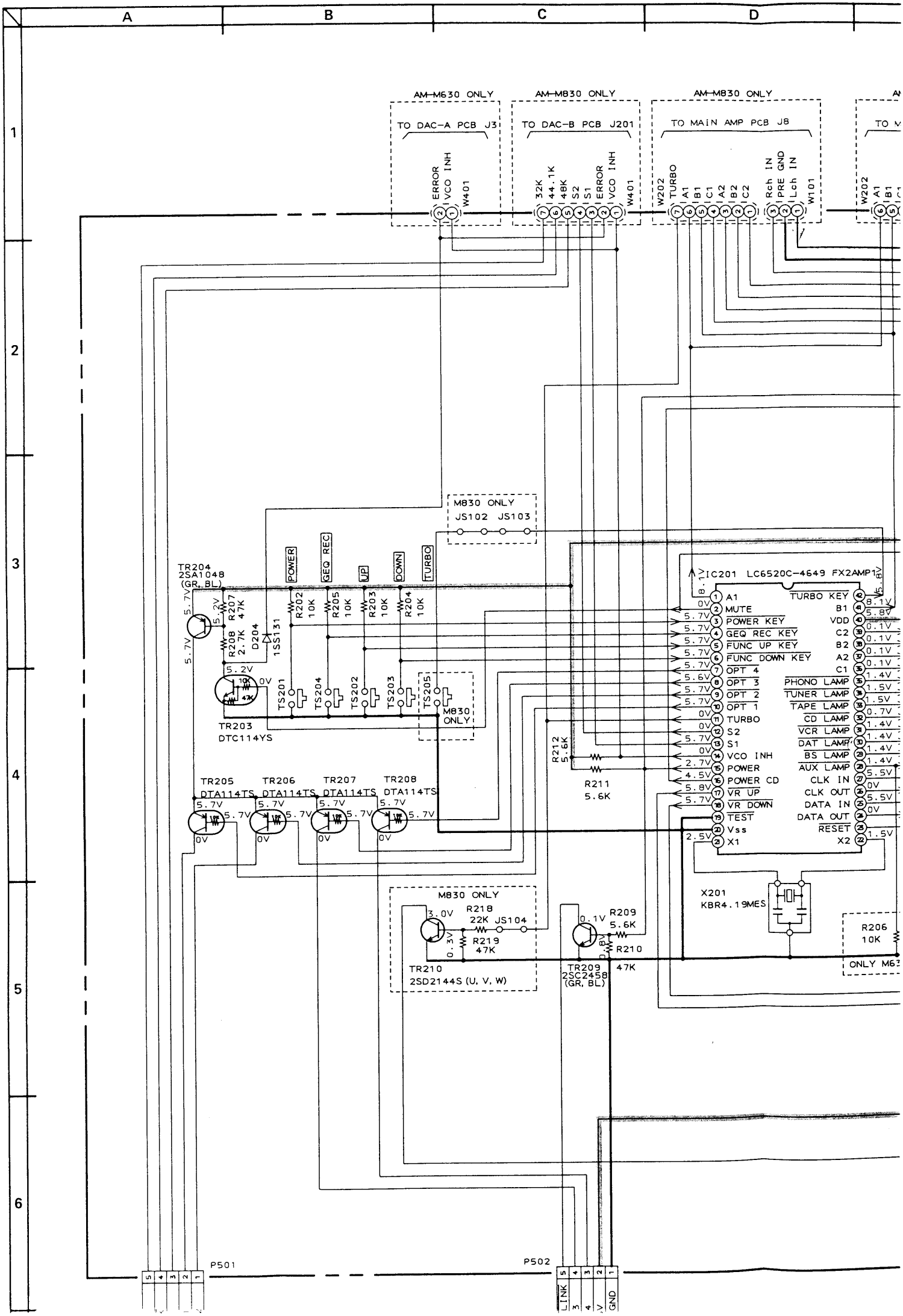
AM-M630 ONLY
TO DAC-A PCB J3
ERROR
VCO INH
W401
AM-M830 ONLY
TO DAC-B PCB J201
32K
44.1K
48K
S2
S1
ERROR
VCO INH
W401
AM-M830 ONLY
TO MAIN AMP PCB J8
W202
TURBO
A1
B1
C1
A2
B2
C2
Rch IN
PRE GND
Lch IN
W101
M830 ONLY
JS102 JS103
POWER
GEQ REC
UP
DOWN
TURBO
TR204
2SA1048
(GR, BL)
R207
47K
R208
2.7K
D204
1SS131
R202
10K
R205
10K
R203
10K
R204
10K
TS201
TS204
TS202
TS203
TS205
M830 ONLY
TR203
DTC114YS
IC201 LC6520C-4649 FX2AMP1
A1
MUTE
POWER KEY
GEQ REC KEY
FUNC UP KEY
FUNC DOWN KEY
OPT 4
OPT 3
OPT 2
OPT 1
TURBO
S2
S1
VCO INH
POWER
POWER CD
VR UP
VR DOWN
TEST
Vss
X1
TURBO KEY
B1
VDD
C2
B2
A2
C1
PHONO LAMP
TUNER LAMP
TAPE LAMP
CD LAMP
VCR LAMP
DAT LAMP
BS LAMP
AUX LAMP
CLK IN
CLK OUT
DATA IN
DATA OUT
RESET
X2
R212
5.6K
R211
5.6K
TR205
DTA114TS
TR206
DTA114TS
TR207
DTA114TS
TR208
DTA114TS
X201
KBR4.19MES
M830 ONLY
R218
22K
JS104
R219
47K
TR210
2SD2144S (U, V, W)
R209
5.6K
R210
47K
TR209
2SC2458
(GR, BL)
R206
10K
ONLY M63
P501
P502
LINK
GND

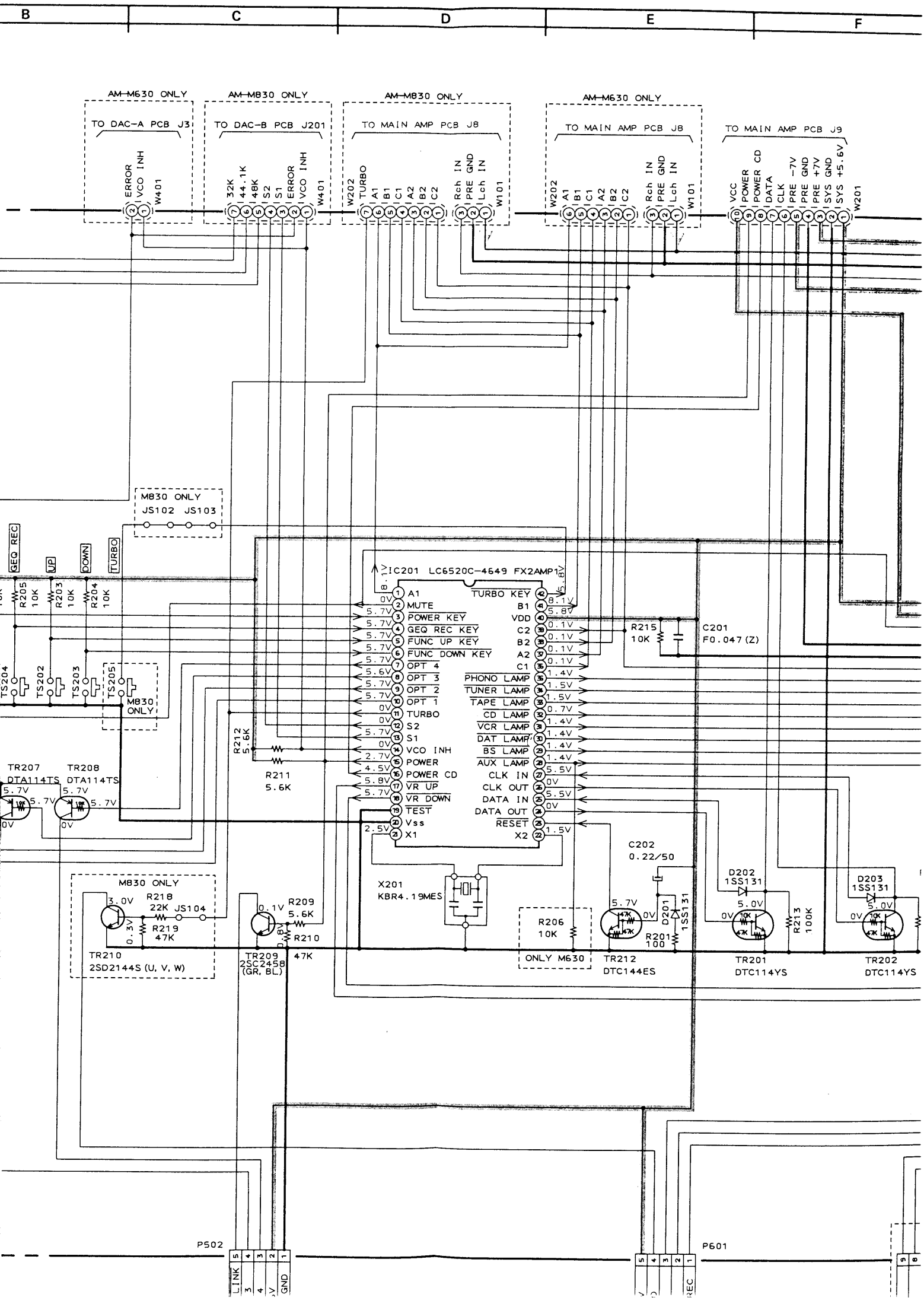
B
C
D
E
F
AM-M630 ONLY
TO DAC-A PCB J3
ERROR
VCO INH
W401
AM-M830 ONLY
TO DAC-B PCB J201
32K
44.1K
48K
S2
S1
ERROR
VCO INH
W401
AM-M830 ONLY
TO MAIN AMP PCB J8
W202
TURBO
A1
B1
C1
A2
B2
C2
Rch IN
PRE GND
Lch IN
W101
AM-M630 ONLY
TO MAIN AMP PCB J8
W202
A1
B1
C1
A2
B2
C2
Rch IN
PRE GND
Lch IN
W101
TO MAIN AMP PCB J9
VCC
POWER
POWER CD
DATA
CLK
PRE -7V
PRE GND
PRE +7V
SYS GND
SYS +5.6V
W201
M830 ONLY
JS102 JS103
GEQ REC
UP
DOWN
TURBO
R205 10K
R203 10K
R204 10K
TS204
TS202
TS203
TS205
M830 ONLY
IC201 LC6520C-4649 FX2AMP1
A1
MUTE
POWER KEY
GEQ REC KEY
FUNC UP KEY
FUNC DOWN KEY
OPT 4
OPT 3
OPT 2
OPT 1
TURBO
S2
S1
VCO INH
POWER
POWER CD
VR UP
VR DOWN
TEST
Vss
X1
TURBO KEY
B1
VDD
C2
B2
A2
C1
PHONO LAMP
TUNER LAMP
TAPE LAMP
CD LAMP
VCR LAMP
DAT LAMP
BS LAMP
AUX LAMP
CLK IN
CLK OUT
DATA IN
DATA OUT
RESET
X2
R212 5.6K
R211 5.6K
R215 10K
C201 F0.047 (Z)
TR207 DTA114TS
TR208 DTA114TS
M830 ONLY
R218 22K
JS104
R219 47K
TR210 2SD2144S (U, V, W)
R209 5.6K
R210 47K
TR209 2SC2458 (GR, BL)
X201 KBR4.19MES
C202 0.22/50
R206 10K
ONLY M630
TR212 DTC144ES
D201 1SS131
R201 100
D202 1SS131
R213 100K
TR201 DTC114YS
D203 1SS131
TR202 DTC114YS
P502
LINK
GND
P601
REC

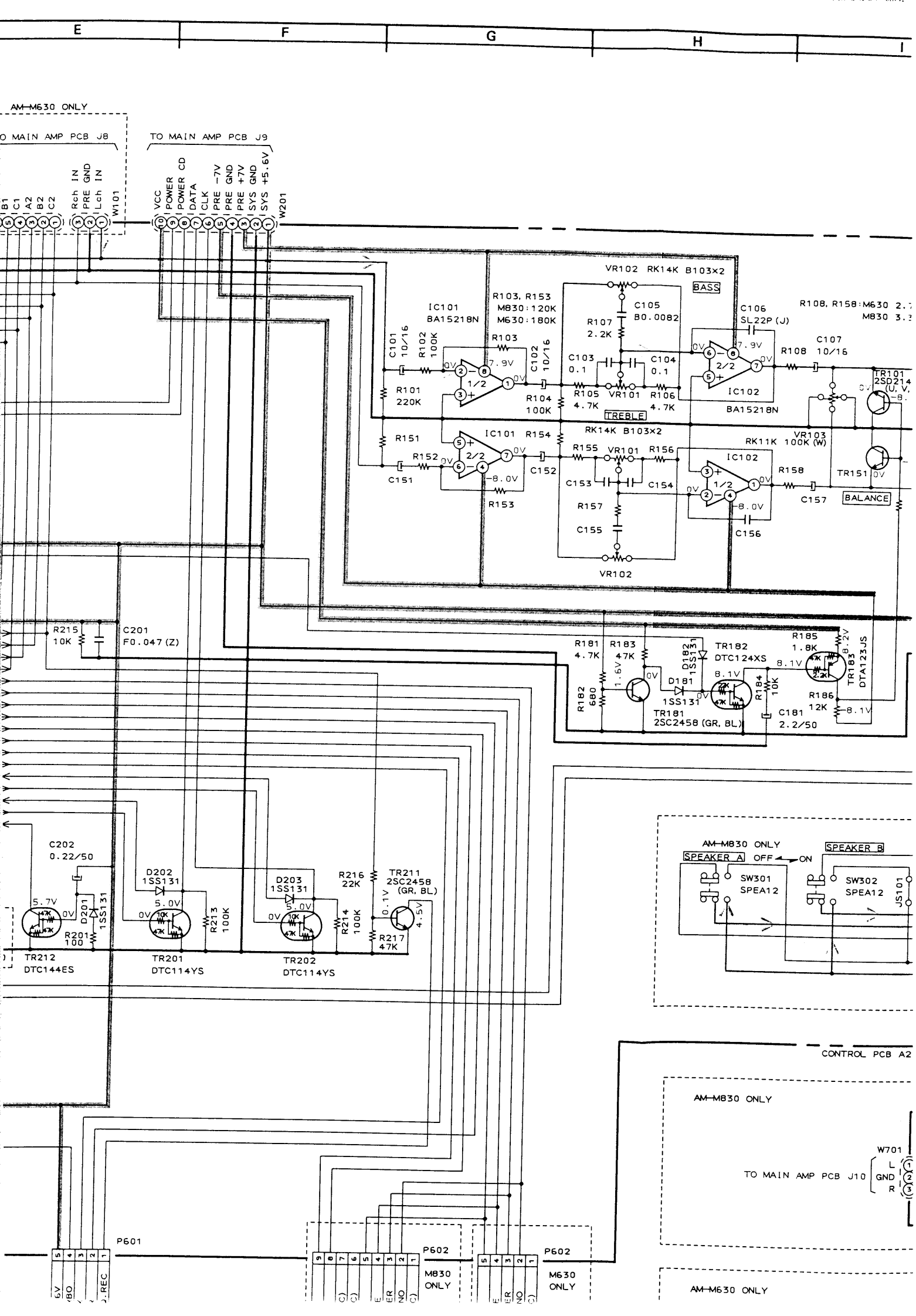
E
F
G
H
I
AM-M630 ONLY
TO MAIN AMP PCB J8
TO MAIN AMP PCB J9
B1
C1
A2
B2
C2
Rch IN
PRE GND
Lch IN
W101
VCC
POWER
POWER CD
DATA
CLK
PRE -7V
PRE GND
PRE +7V
SYS GND
SYS +5.6V
W201
VR102 RK14K B103x2
BASS
IC101
BA15218N
R103, R153
M830:120K
M630:180K
C105
B0.0082
R107
2.2K
C106
SL22P (J)
R108, R158:M630 2.
M830 3.
C101
10/16
R102
100K
R103
C102
10/16
C103
0.1
C104
0.1
R108
C107
10/16
R101
220K
R104
100K
R105
4.7K
VR101
R106
4.7K
IC102
BA15218N
TREBLE
TR101
2SD214
(U, V,
RK14K B103x2
VR103
RK11K 100K (W)
R151
IC101
R154
R155
VR101
R156
IC102
R158
TR151
R152
C152
C153
C154
C157
BALANCE
C151
R153
R157
C156
C155
VR102
R215
10K
C201
F0.047 (Z)
R181
4.7K
R183
47K
D182
1SS131
TR182
DTC124XS
R185
1.8K
TR183
DTA123JS
R182
680
D181
1SS131
R184
10K
R186
12K
TR181
2SC2458 (GR, BL)
C181
2.2/50
C202
0.22/50
D202
1SS131
D203
1SS131
R216
22K
TR211
2SC2458
(GR, BL)
D201
1SS131
R201
100
R213
100K
R214
100K
R217
47K
TR212
DTC144ES
TR201
DTC114YS
TR202
DTC114YS
AM-M830 ONLY
SPEAKER A
OFF
ON
SPEAKER B
SW301
SPEA12
SW302
SPEA12
JS101
CONTROL PCB A2
AM-M830 ONLY
W701
TO MAIN AMP PCB J10
L
GND
R
P601
P602
M830
ONLY
P602
M630
ONLY
AM-M630 ONLY

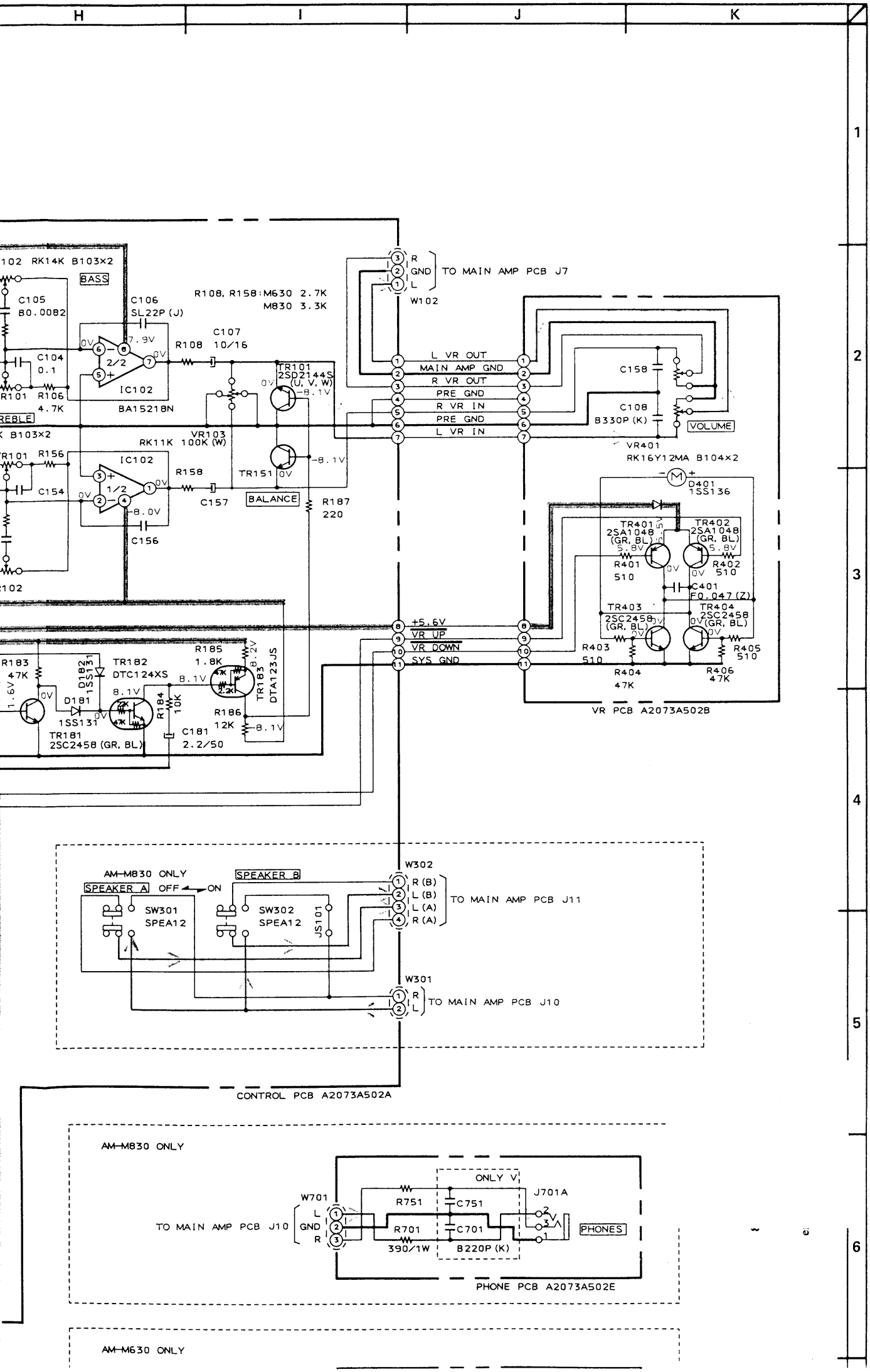
H
I
J
K
1
2
3
4
5
6
BASS
C105
80.0082
C106
SL22P (J)
R108, R158:M630 2.7K
M830 3.3K
C107
10/16
R108
C104
0.1
R101
R106
4.7K
IC102
BA15218N
TR101
2SD2144S
(U, V, W)
REBLE
VR103
100K (W)
RK11K
IC102
R156
C154
R158
C157
TR151
BALANCE
R187
220
C156
R183
47K
TR182
DTC124XS
R185
1.8K
TR183
DTA123JS
D182
1SS131
D181
1SS131
R184
10K
R186
12K
C181
2.2/50
TR181
2SC2458 (GR, BL)
R
GND
L
TO MAIN AMP PCB J7
W102
L VR OUT
MAIN AMP GND
R VR OUT
PRE GND
R VR IN
PRE GND
L VR IN
C158
C108
B330P (K)
VOLUME
VR401
RK16Y12MA B104×2
D401
1SS136
TR401
2SA1048
(GR, BL)
TR402
2SA1048
(GR, BL)
R401
510
R402
510
C401
F0.047 (Z)
TR403
2SC2458
(GR, BL)
TR404
2SC2458
(GR, BL)
R403
510
R404
47K
R405
510
R406
47K
+5.6V
VR UP
VR DOWN
SYS GND
VR PCB A2073A502B
AM-M830 ONLY
SPEAKER A
OFF
ON
SPEAKER B
SW301
SPEA12
SW302
SPEA12
JS101
W302
R (B)
L (B)
L (A)
R (A)
TO MAIN AMP PCB J11
W301
R
L
TO MAIN AMP PCB J10
CONTROL PCB A2073A502A
AM-M830 ONLY
ONLY V
W701
L
GND
R
TO MAIN AMP PCB J10
R751
C751
R701
390/1W
C701
B220P (K)
J701A
PHONES
PHONE PCB A2073A502E
AM-M630 ONLY

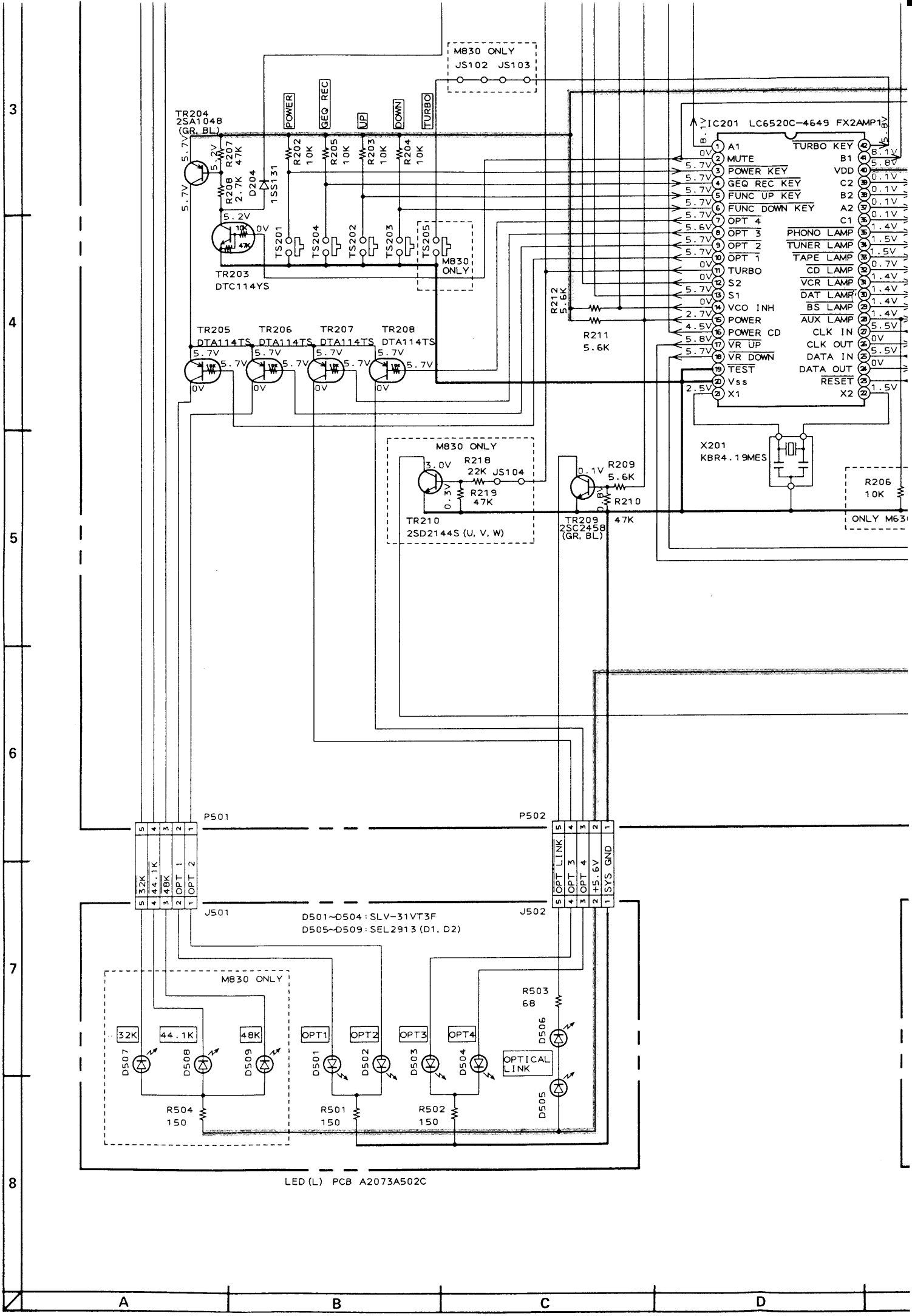
M830 ONLY
JS102 JS103
POWER
GEQ REC
UP
DOWN
TURBO
TR204
2SA1048
(GR, BL)
R207
47K
R208
2.7K
D204
1SS131
R202
10K
R205
10K
R203
10K
R204
10K
TS201
TS204
TS202
TS203
TS205
M830 ONLY
TR203
DTC114YS
IC201 LC6520C-4649 FX2AMP1
A1
MUTE
POWER KEY
GEQ REC KEY
FUNC UP KEY
FUNC DOWN KEY
OPT 4
OPT 3
OPT 2
OPT 1
TURBO
S2
S1
VCO INH
POWER
POWER CD
VR UP
VR DOWN
TEST
Vss
X1
TURBO KEY
B1
VDD
C2
B2
A2
C1
PHONO LAMP
TUNER LAMP
TAPE LAMP
CD LAMP
VCR LAMP
DAT LAMP
BS LAMP
AUX LAMP
CLK IN
CLK OUT
DATA IN
DATA OUT
RESET
X2
R212
5.6K
R211
5.6K
TR205
DTA114TS
TR206
DTA114TS
TR207
DTA114TS
TR208
DTA114TS
X201
KBR4.19MES
R206
10K
ONLY M63
M830 ONLY
R218
22K
JS104
R219
47K
TR210
2SD2144S (U, V, W)
R209
5.6K
R210
47K
TR209
2SC2458
(GR, BL)
P501
P502
32K
44.1K
48K
OPT 1
OPT 2
OPT LINK
OPT 3
OPT 4
+5.6V
SYS GND
J501
J502
D501~D504 : SLV-31VT3F
D505~D509 : SEL2913 (D1, D2)
M830 ONLY
32K
44.1K
48K
OPT1
OPT2
OPT3
OPT4
D507
D508
D509
D501
D502
D503
D504
OPTICAL LINK
R503
68
D506
D505
R504
150
R501
150
R502
150
LED (L) PCB A2073A502C

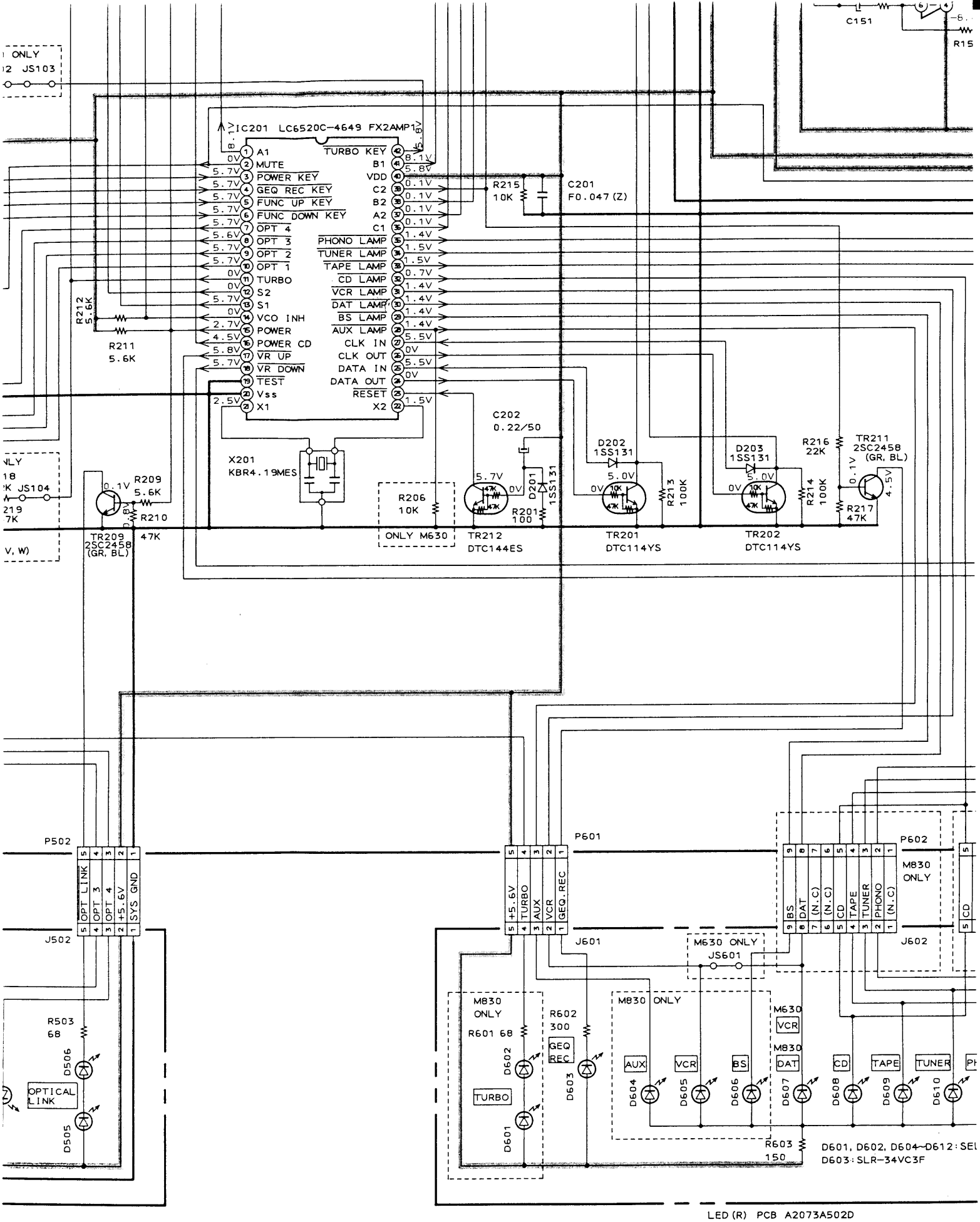

INDICATED VOLTAGES WERE MEASURED WHEN NO SIGNAL WAS BEING INPUT. (FUNCTION: CD MODE)

C | D | E | F | G

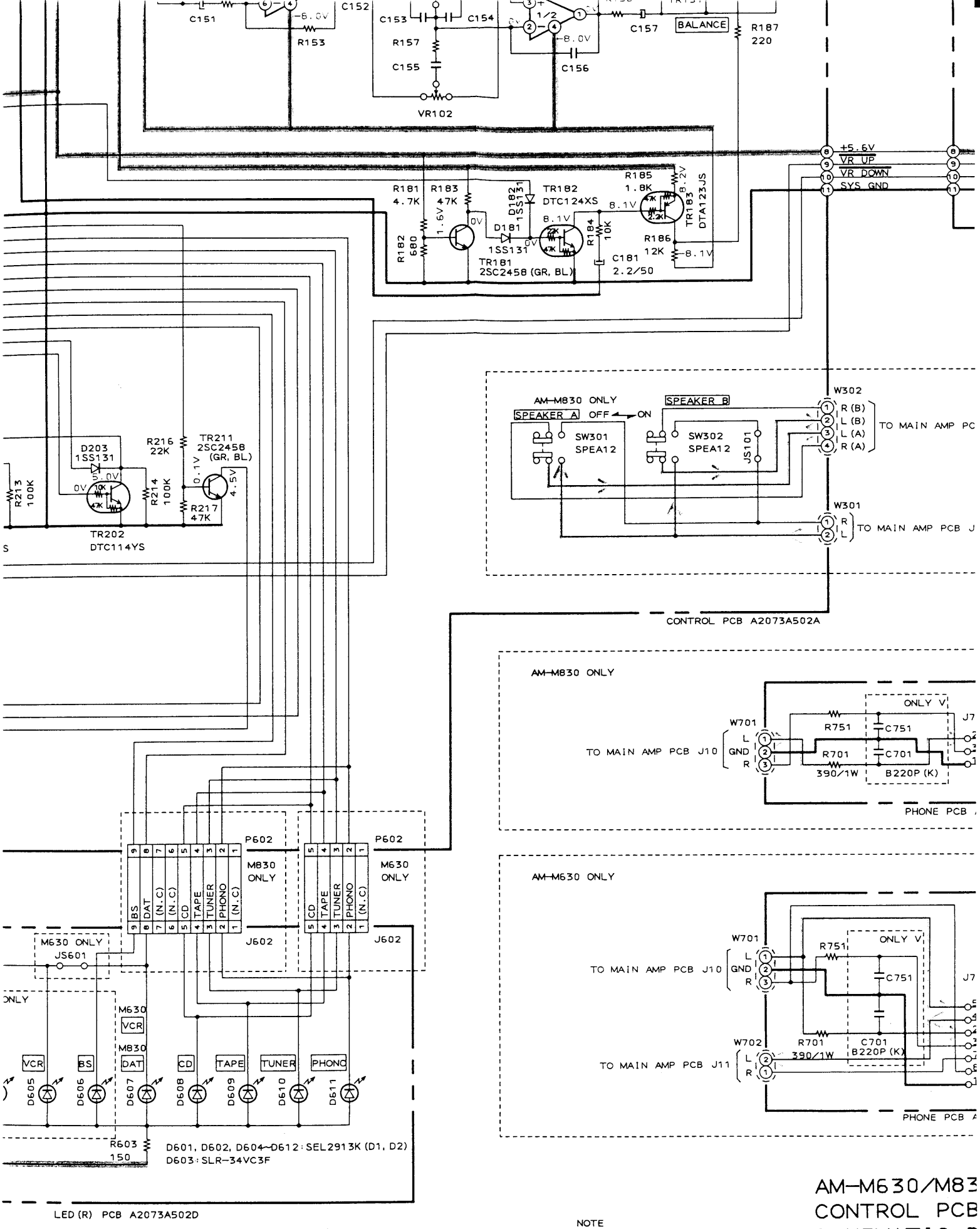

INDICATED VOLTAGES WERE MEASURED WHEN NO SIGNAL WAS BEING INPUT. (FUNCTION: CD MODE)

B (POWER SUPPLY) LINE

SIGNAL LINE

NOTE
UNLESS OTHERWISE SPECIFIED
ALL RESISTORS IN OHMS 1/6W (J)
ALL CAPACITORS IN μF 50WV (M)

AM-M630/M83
CONTROL PCB
SCHEMATIC D

No.5-3 A2

F | G | H | I | J

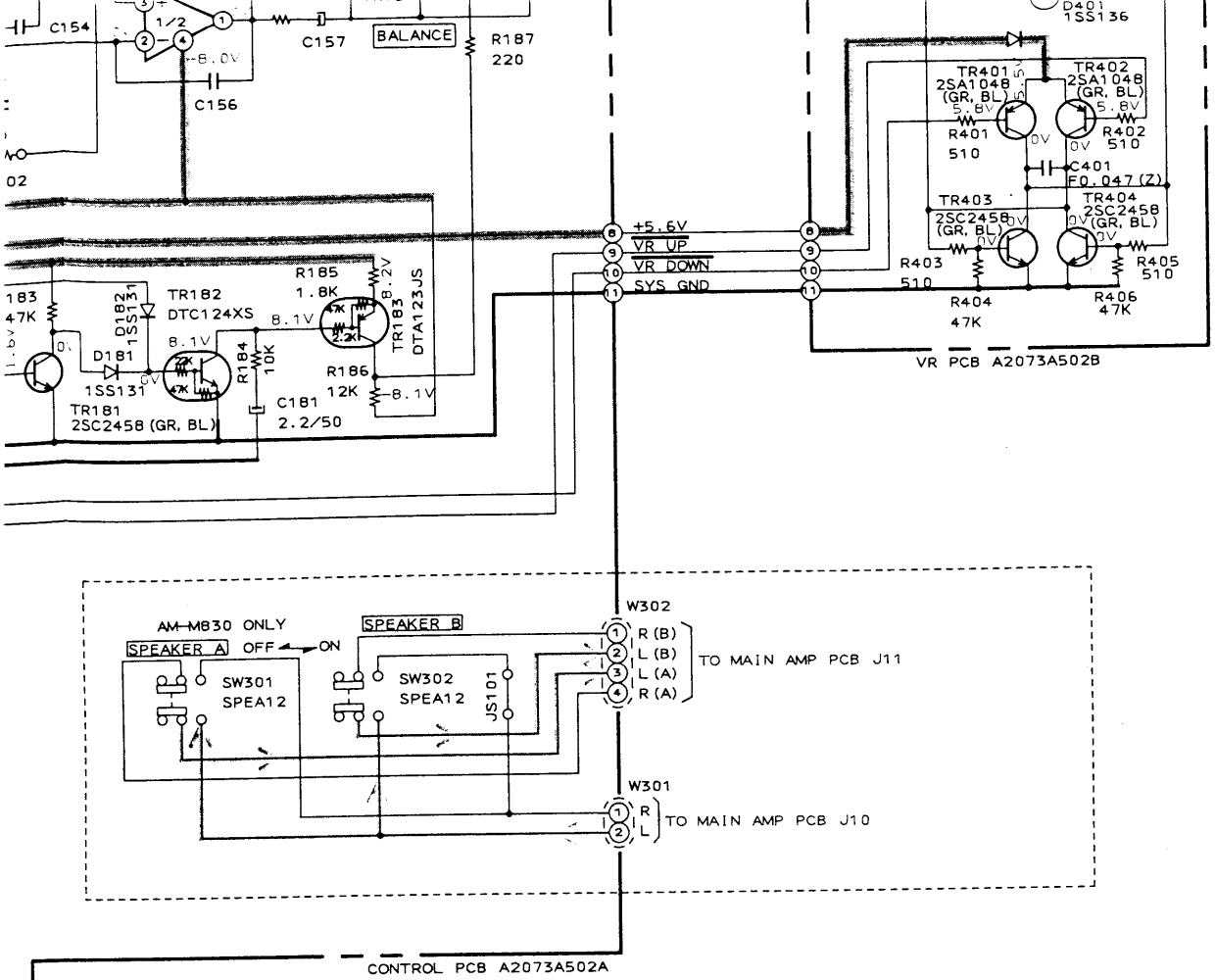

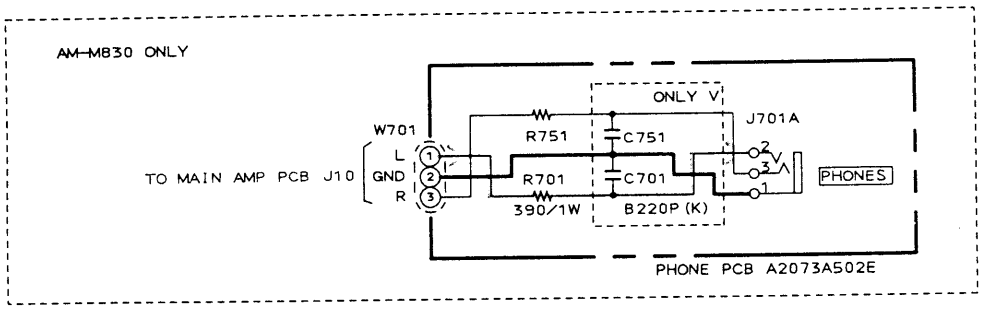

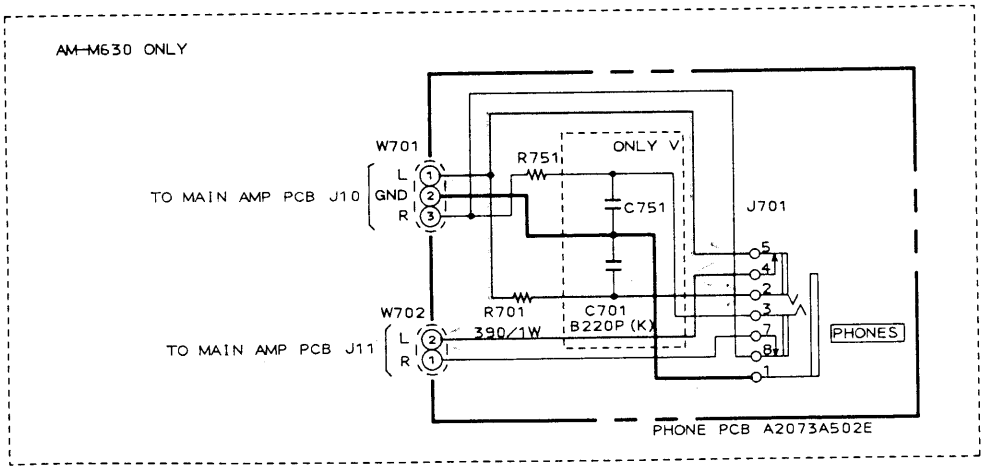

AM-M630/M830
CONTROL PCB
SCHEMATIC DIAGRAM

No.5-3 A207303M

NOTE
UNLESS OTHERWISE SPECIFIED
ALL RESISTORS IN OHMS 1/6W(J)
ALL CAPACITORS IN μF 50WV(M)

SUPPLY) LINE

INE