AM-A102
AM-A202
AM-A302
AM-A402

AKAI SERVICE MANUAL

For Service Manuals Contact
MAURITRON TECHNICAL SERVICES
8 Cherry Tree Rd, Chinnor
Oxon OX9 4QY
Tel:- 01844-351694 Fax:- 01844-352554
Email:- enquiries@mauritron.co.uk

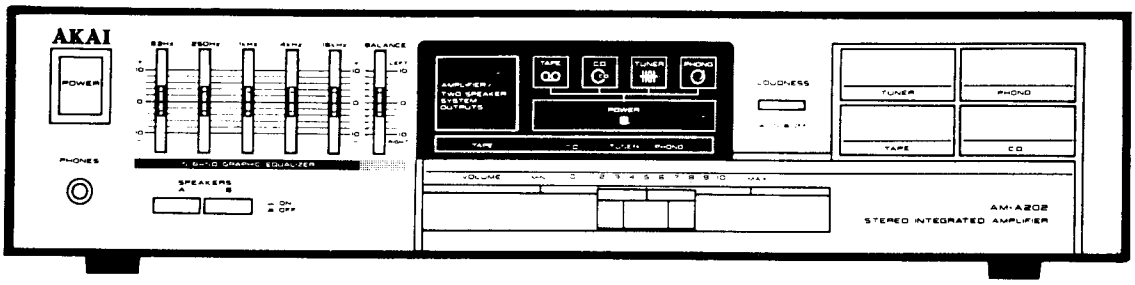

MODEL AM-A202

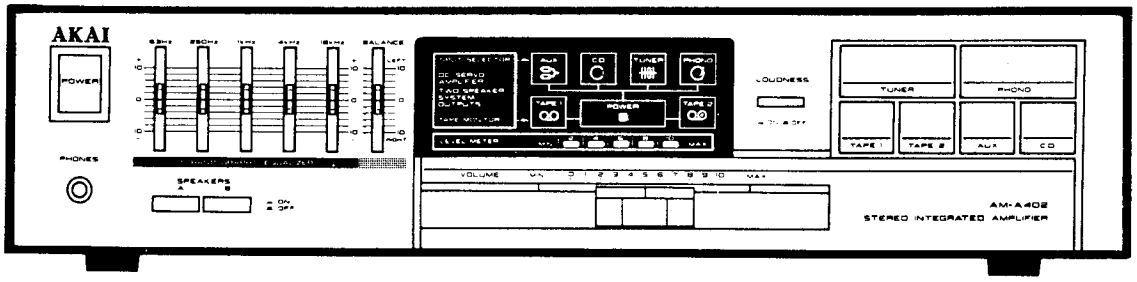

MODEL AM-A402

STEREO INTEGRATED AMPLIFIER

MODEL AM-A102
MODEL AM-A202
MODEL AM-A302
MODEL AM-A402

SAFETY INSTRUCTIONS

PRECAUTIONS DURING SERVICING

1. Parts identified by the ⚠ symbol parts are critical for safety. Replace only with parts number specified.
2. In addition to safety, other parts and assemblies are specified for conformance with such regulations as those applying to spurious radiation.
   These must also be replaced only with specified replacements.
   Examples: RF converters, tuner units, antenna selector switches, RF cables, noise blocking capacitors, noise blocking filters, etc.
3. Use specified internal wiring. Note especially:
   1) Wires covered with PVC tubing
   2) Double insulated wires
   3) High voltage leads
4. Use specified insulating materials for hazardous live parts. Note especially:
   1) Insulation Tape
   2) PVC tubing
   3) Spacers (Insulating Barriers)
   4) Insulation sheets for transistors
   5) Plastic screws for fixing microswitch (especially in turntable)
5. When replacing AC primary side components (transformers, power cords, noise blocking capacitors, etc.), wrap ends of wires securely about the terminals before soldering.

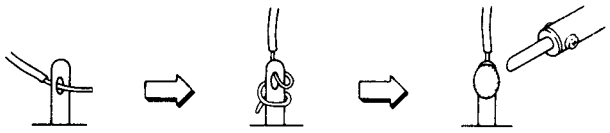

6. Observe that wires do not contact heat producing parts (heatsinks, oxide metal film resistors, fusible resistors, etc.).
7. Check that replaced wires do not contact sharp edged or pointed parts.
8. Also check areas surrounding repaired locations.
9. Use care that foreign objects (screws, solder droplets, etc.) do not remain inside the set.

SAFETY CHECK AFTER SERVICING

Confirm the specified insulation resistance between power cord plug prongs and externally exposed parts of the set is greater than 10 M ohms, but for equipment with external antenna terminals (tuner, receiver, etc.) and is intended for [C] or [A], specified insulation resistance should be headphone jacks, line-in-out jacks etc. more than 2.2 M ohms (ground terminals, microphone jacks).

For Service Manuals Contact
MAURITRON TECHNICAL SERVICES
8 Cherry Tree Rd, Chinnor
Oxon OX9 4QY
Tel:- 01844-351694 Fax:- 01844-352554
Email:- enquiries@mauritron.co.uk

INFORMATION

SYMBOLS FOR PRIMARY DESTINATION

Alphabet indicates the destination of the units as listed below.

Symbols	Principal Destinations
[A]	USA
[B]	UK
[C]	Canada
[E]	Europe (except UK)
[J]	Japan
[S]	Australia
[V]	W. Germany only
[U]	Universal Area
[Y*]	Custom version

VOLTAGE CONVERSION ([U] Model only)

Before connecting the power cord, turn the VOLTAGE SELECTOR located on the rear panel with a screwdriver so that the correct voltage is indicated.

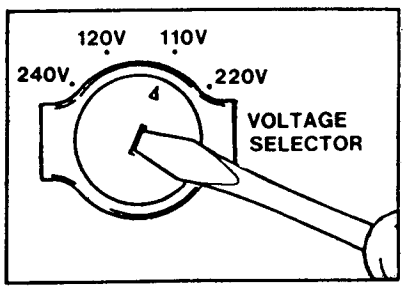

I. SPECIFICATIONS

1-1. Model AM-A202, AM-A102

Model	AM-A202	AM-A102
Power output (8 ohms)		
Rated 40 Hz–20 kHz	40 W/0.3%	25 W/0.3%
by FTC 40 Hz–20 kHz	50 W/0.3%	–
by DIN 1 kHz	45 W	30 W
Music power (Both channels)	200 W	160 W
Power bandwidth (IHF –3 dB, 8 ohms)	10 Hz to 50 kHz (0.5%)	10 Hz to 40 kHz (0.5%)
S/N (IHF-A)		
PHONO	72 dB	72 dB
CD, TAPE	92 dB	92 dB
Residual noise (8 ohms)	0.5 mV	0.5 mV
Channel separation (IHF, 1 kHz)	60 dB	60 dB
Damping factor (1 kHz, 8 ohms)	20	20
Speaker impedance		
A or B	8 to 16 ohms	8 to 16 ohms
A and B	8 to 16 ohms	8 to 16 ohms
Input sensitivity/Impedance		
PHONO	2.5 mV/47 kohms	2.5 mV/47 kohms
CD, TAPE	150 mV/47 kohms	150 mV/47 kohms
Output level/Impedance		
TAPE	150 mV/1 kohms	150 mV/1 kohms
Frequecy response		
PHONO (RIAA)	±0.5 dB	±0.5 dB
CD, TAPE	5 Hz to 100 kHz (–3 dB)	5 Hz to 100 kHz (–3 dB)
Graphic equalizer		
Center frequency	63 Hz/250 Hz/1 kHz/4 kHz/ 16 kHz	63 Hz/250 Hz/1 kHz/4 kHz/ 16 kHz
Control range	±10 dB	±10 dB
PHONO max. input level	120 mV	120 mV
Power requirements	120 V, 60 Hz for USA and Canada 220 V, 50 Hz for Europe except UK 240 V, 50 Hz for UK and Australia 110 V/120 V/220 V/240 V, 50 Hz/60 Hz convertible for other countries	
Dimensions	440 (W) ×100 (H) ×250 (D) mm (17.3 ×3.9 ×9.8 inches)	440 (W) ×100 (H) ×250 (D) mm (17.3 ×3.9 ×9.8 inches)
Weight	5.2 kg (11.5 lbs)	5.8 kg (12.8 lbs)

* For improvement purposes, specifications and design are subject to change without notice.

1-2. Model AM-A402, AM-A302

Model	AM-A402	AM-A302
Power output	8 ohms	8 ohms
Rated	–	20 Hz to 20 kHz 60 W/0.09%
by FTC	20 Hz to 20 kHz 100 W/0.09%	20 Hz to 20 kHz 80 W/0.09%
by DIN	1 kHz 100 W	1 kHz 65 W
Music power (Both channels)	430 W	320 W
Power bandwidth (IHF –3 dB, 8 ohms)	5 Hz to 50 kHz (0.5%)	5 Hz to 50 kHz (0.5%)
S/N (IHF-A)		
PHONO	72 dB	72 dB
CD, TAPE	95 dB	95 dB
Residual noise (8 ohms)	0.5 mV	0.5 mV
Channel separation (IHF, 1 kHz)	60 dB	60 dB
Damping factor (1 kHz, 8 ohms)	45	45
Speaker impedance		
A or B	8 to 16 ohms	8 to 16 ohms
A and B	16 ohms	16 ohms
Input sensitivity/Impedance		
PHONO	2.5 mV/47 kohms	2.5 mV/47 kohms
CD, TAPE	150 mV/47 kohms	150 mV/47 kohms
Output level/Impedance		
TAPE	150 mV/1 kohms	150 mV/1 kohms
Frequecy response		
PHONO (RIAA)	±0.5 dB	±0.5 dB
CD, TAPE	5 Hz to 100 kHz (–3 dB)	5 Hz to 100 kHz (–3 dB)
Graphic equalizer		
Center frequency	63 Hz/250 Hz/1 kHz/4 kHz/ 16 kHz	63 Hz/250 Hz/1 kHz/4 kHz/ 16 kHz
Control range	±10 dB	±10 dB
PHONO max. input level	120 mV	120 mV
Power requirements	120 V, 60 Hz for USA and Canada 220 V, 50 Hz for Europe except UK 240 V, 50 Hz for UK and Australia 110 V/120 V/220 V/240 V, 50 Hz/60 Hz convertible for other countries	
Dimensions	440 (W) ×100 (H) ×250 (D) mm (17.3 ×3.9 ×9.8 inches)	440 (W) ×100 (H) ×250 (D) mm (17.3 ×3.9 ×9.8 inches)
Weight	7.3 kg (16.1 lbs)	6.8 kg (15.0 lbs)

* For improvement purposes, specifications and design are subject to change without notice.

II. DISMANTLING OF UNIT

In case of trouble, etc. necessitating dismantling, please dismantle in the order shown in the photographs.
Reassemble in reverse order.

1. UPPER COVER

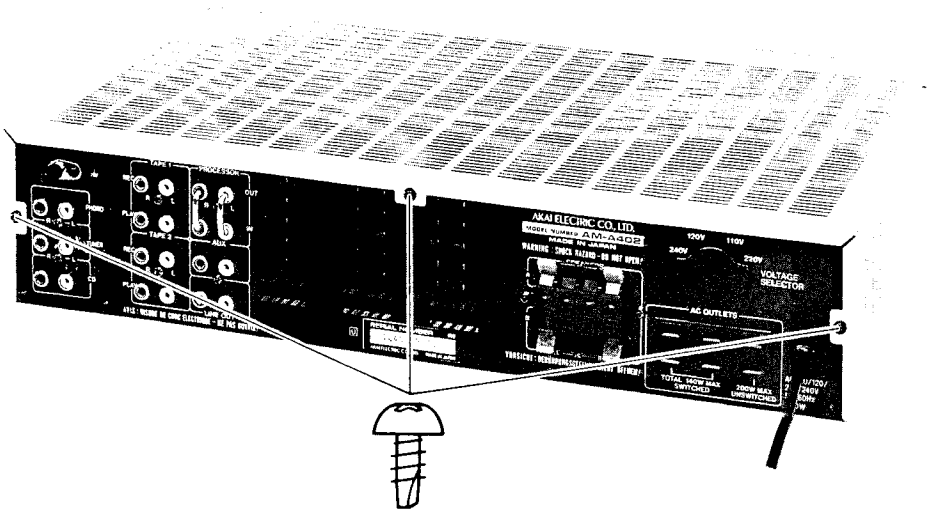

2. FRONT PANEL

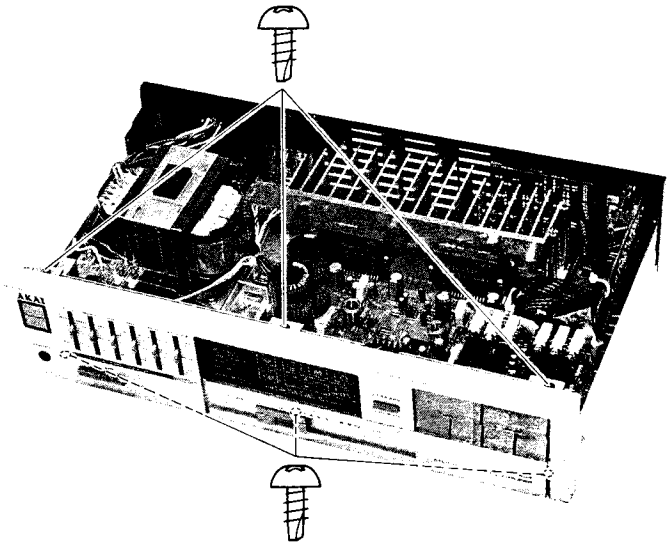

For Service Manuals Contact
MAURITRON TECHNICAL SERVICES
8 Cherry Tree Rd, Chinnor
Oxon OX9 4QY
Tel:- 01844-351694 Fax:- 01844-352554
Email:- enquiries@mauritron.co.uk

III. CONTROLS

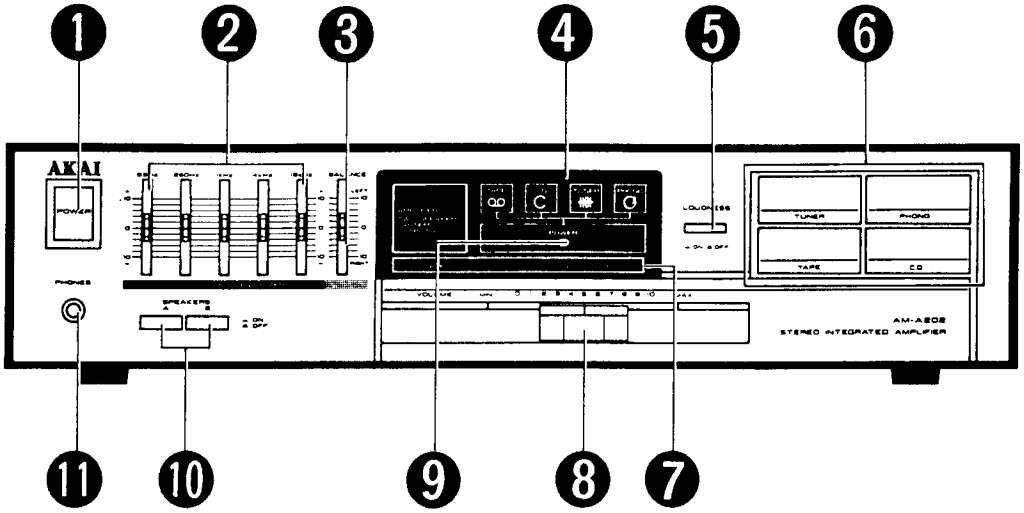

Fig. 3-1 Controls for Models AM-A102, AM-A202

1. **POWER switch**
   To turn on and off the Akai amplifier.

2. **GRAPHIC EQUALIZER controls**
   To finely adjust the frequency levels between a range of 63 Hz to 16 kHz, during playback operations.

3. **BALANCE control**
   To adjust the left and right channel balance.

4. **INPUT SELECTOR Indicators**
   Shows which input source has been selected.

5. **LOUDNESS switch**
   For instant compensation of the tone setting at low volume.

6. **Input source selectors**
   To select audio source you want to listen to.

7. **TAPE MONITOR indicators**
   Shows which equipement is being monitored.

8. **VOLUME control**
   To adjust the volume level.

9. **POWER Indicator**
   Indicates when the power is turned on.

10. **SPEAKERS Selectors (A and B)**
    To select the speaker system.

11. **Headphones (PHONES) jack**
    For headphone listening.

For Service Manuals Contact
MAURITRON TECHNICAL SERVICES
8 Cherry Tree Rd, Chinnor
Oxon OX9 4QY
Tel:- 01844-351694 Fax:- 01844-352554
Email:- enquiries@mauritron.co.uk

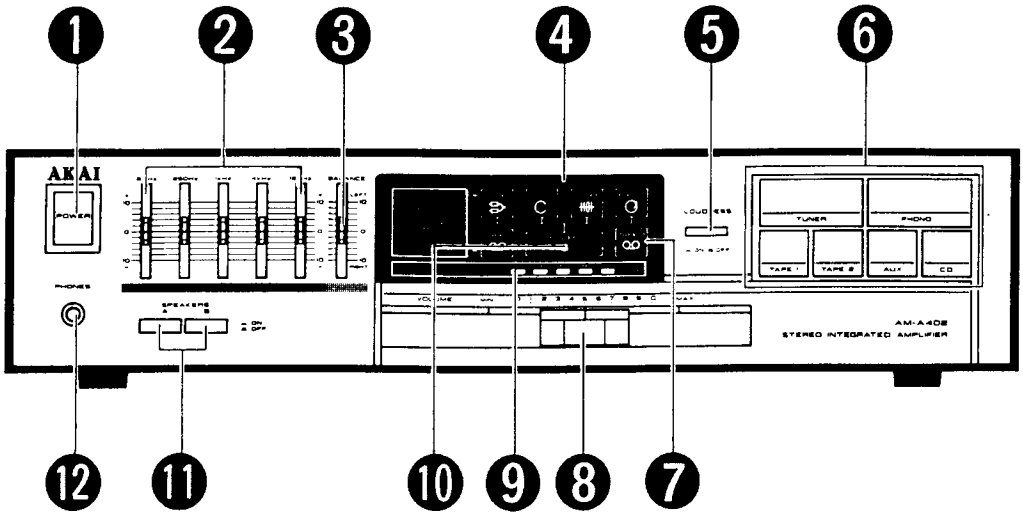

Fig. 3-2 Controls for Models AM-A302, AM-A402

❶ **POWER switch**
To turn on and off the Akai amplifier.

❷ **GRAPHIC EQUALIZER controls**
To finely adjust the frequency levels between a range of 63 Hz to 16 kHz, during playback operations.

❸ **BALANCE control**
To adjust the left and right channel balance.

❹ **INPUT SELECTOR Indicators**
Shows which input source has been selected.

❺ **LOUDNESS switch**
For instant compensation of the tone setting at low volume.

❻ **Input source selectors**
To select audio source you want to listen to.

❼ **TAPE MONITOR indicators**
Shows which equipement is being monitored.

❽ **VOLUME control**
To adjust the volume level.

❾ **LED LEVEL meter**
Indicates both the left and right channel sound volume level.

❿ **POWER Indicator**
Indicates when the power is turned on.

⓫ **SPEAKERS Selectors (A and B)**
To select the speaker system.

⓬ **Headphones (PHONES) jack**
For headphone listening.

Protection circuit
When the Akai amplifier is turned on, no signal will be output to the speakers for a few seconds. This is due to the protection circuit which prevents output of noise when the Akai amplifier is turned on.
The protection circuit also functions during playback to protect the speakers from overloading, and to protect the circuit from damages. When speakers with less than rated impedance are used, the protection circuit will short-circuit the ⊕ and ⊖ speaker cords. Therefore, should the sound be cut during playback:
1 Turn off the Akai amplifier.
2 Check for and correct the cause.
3 Turn on the Akai amplfier.

For Service Manuals Contact
MAURITRON TECHNICAL SERVICES
8 Cherry Tree Rd, Chinnor
Oxon OX9 4QY
Tel:- 01844-351694 Fax:- 01844-352554
Email:- enquiries@mauritron.co.uk

IV. PRINCIPAL PARTS LOCATION

4-1. Model AM-A102, AM-A202

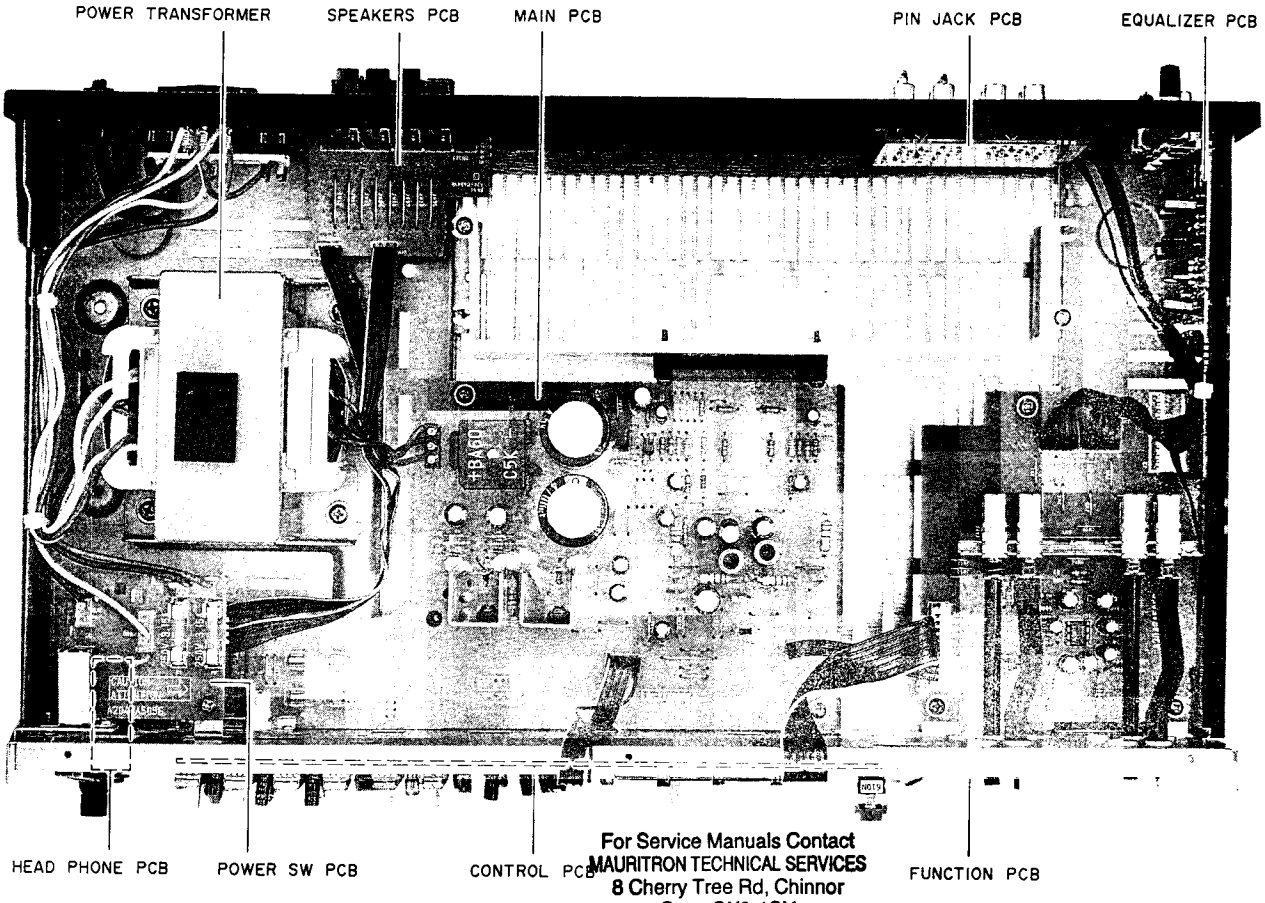

For Service Manuals Contact
MAURITRON TECHNICAL SERVICES
8 Cherry Tree Rd, Chinnor
Oxon OX9 4QY
Tel:- 01844-351694 Fax:- 01844-352554
Email:- enquiries@mauritron.co.uk

Fig. 4-1

4-2. Model AM-A302, AM-A402

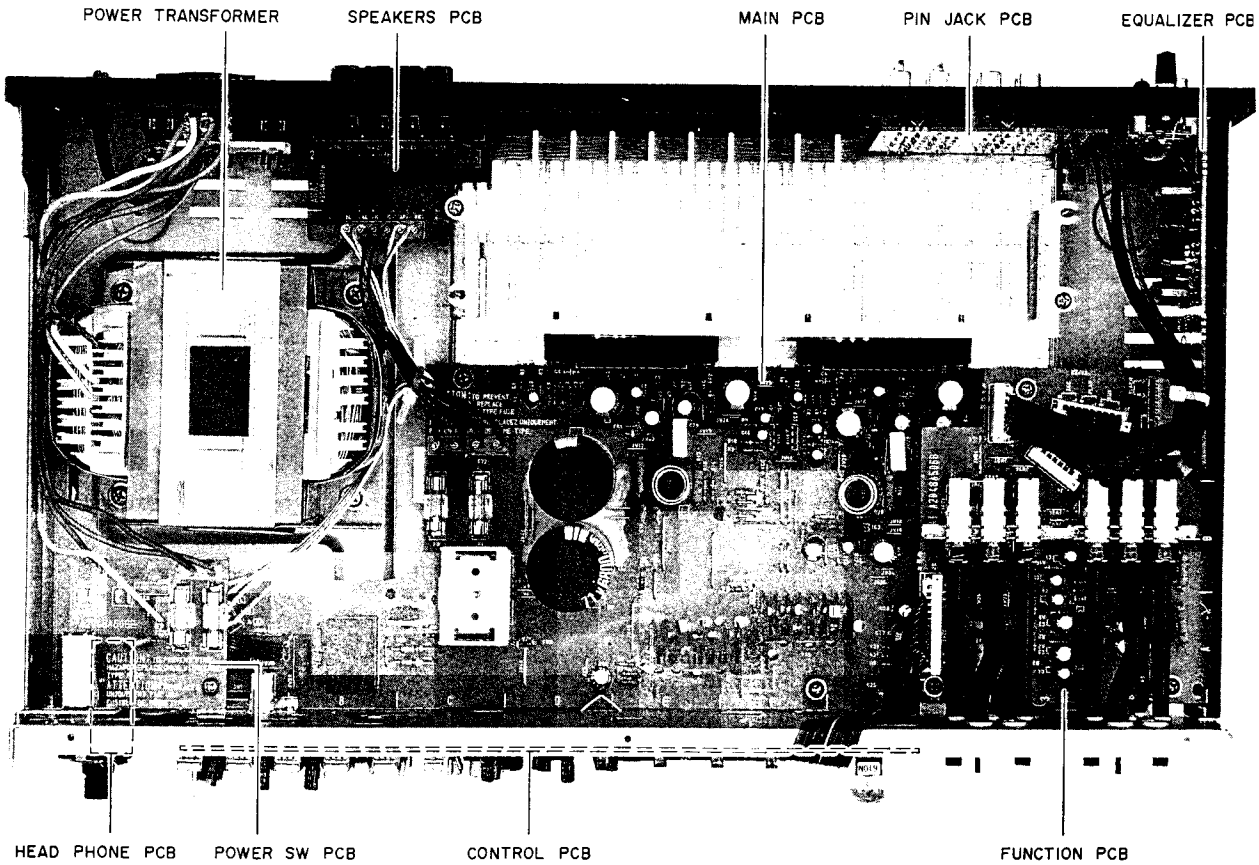

Fig. 4-2

V. ADJUSTMENT

5-1. LEVEL METER SENSITIVITY ADJUSTMENT (AM-A302, AM-A402 Model only)

This adjustment is not necessary if the level meter shows no levels with no signal input.
However if the level meter shows some levels in spite of no signal input, adjust VR8 to the point where the first LED (Dl) is extinguished.

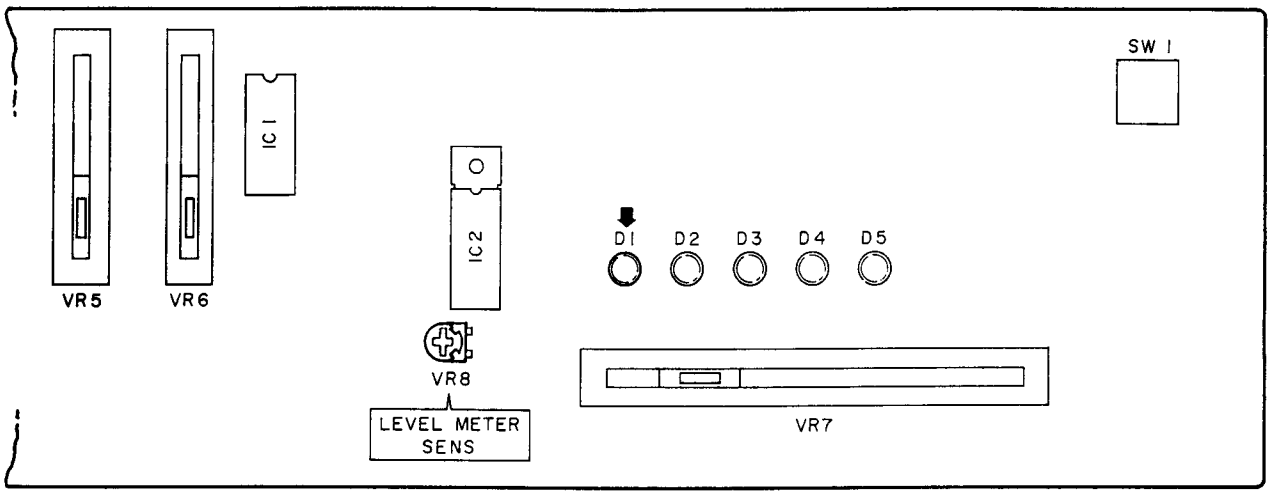

Fig. 5-1 Adjustment point of CONTROL PCB

For Service Manuals Contact
MAURITRON TECHNICAL SERVICES
8 Cherry Tree Rd, Chinnor
Oxon OX9 4QY
Tel:- 01844-351694 Fax:- 01844-352554
Email:- enquiries@mauritron.co.uk

VI. PARTS LIST

ATTENTION

1. **When placing an order for parts, be sure to list Part No., Model No. and the description of each part. Otherwise, the non-delivery of the part or the delivery of a wrong part may result.**
2. **Please make sure that Part No. is correct when ordering.**
   If not, a part different from the one you ordered may be delivered.
3. **Since the parts shown in Parts List of Preliminary Service Manual may have been the subject of changes, please use this Parts List for all future reference.**

HOW TO USE THIS PARTS LIST

1. This Parts List lists those parts which are considered necessary for repairs. Other common parts, such as resistors and capacitors, are listed in the "Common List for Service Parts" from which these parts should be selected and stocked.
2. The Recommended Spare Parts List shows those parts in the Parts List which are considered particularly important for service.
3. Parts not shown in the Parts List and "Common List for Service Parts" will not in principle be supplied.
4. How to read the Parts List.

a) Mechanism Block

2. HEAD BASE BLOCK

REF. NO.	PART NO.	DESCRIPTION
2-1x	BH-T2023A320A	HEAD BASE BLOCK
2-2	HP-H2206A010A	HEAD R/P PR4-8FU C
2-3	ZS-477876	PAN20x03STL CMT
2-4	ZS-536488	BID20x08STL CMT
2-5	ZG-402895	SP CS ANGLE ADJUST

SP (Service Parts) Classification

A small "x" indicates that this part is not shown in the Photo or Illustration.

This number corresponds with the individual parts index number in that figure.

This number corresponds with the Figure Number.

b) PC Board

6. MAIN PC BOARD

REF. NO.	PART NO.	DESCRIPTION
6-IC1	EI-324536	IC HD14049BP
6-IC2	EI-336801	IC MB8841-564M
6-C1A	EC-338399	C MMY V 223M 250AC [U,E,B,S]
6-C1B	EC-350949	C MMY V 223M 250DC [J]
6-C1C	EC-338397	C MMY V 223M 125AC [C,A]
6-X1	EI-318384	OSC X'TAL NC-18C

Symbols for primary destination

[A]: AAL(U.S.A.) [S]: SAA(Australia)
[B]: BEAB(England) [U]: U/T(Universal Area)
[C]: CSA(Canada) [V]: VDE(W. Germany)
[E]: CEE(Europe) [Y]: Custom Version
[J]: JPN(Japan)

SP (Service Parts) Classification

These reference symbols correspond with component symbols in the Schematic Diagrams.

The available PC Board Blocks are listed separately.

5. When Part No. is known, Parts Index at end of Parts List can be used to locate where that part is shown in Parts List by its Reference No. listed at right of Part No.

WARNING

⚠ INDICATES SAFETY CRITICAL COMPONENTS. FOR CONTINUED SAFETY, REPLACE SAFETY CRITICAL COMPONENTS ONLY WITH MANUFACTURE'S RECOMMENDED PARTS

AVERTISSEMENT

⚠ IL INDIQUE LES COMPOSANTS CRITIQUES DE SÉCURITÉ. POUR MAINTENIR LE DEGRÉ DE SÉCURITÉ DE L'APPAREIL, NE REMPLACER QUE DES PIÉCES RECOMMANDEES PAR LÉ FABRICANT

RECOMMENDED SPARE PARTS LIST

Because, if the parts listed below are on hand, almost any repair can be accomplished, we suggest that you stock these Recommended Spare Parts Items.

For Service Manuals Contact
MAURITRON TECHNICAL SERVICES
8 Cherry Tree Rd, Chinnor
Oxon OX9 4QY
Tel:- 01844-351694 Fax:- 01844-352554
Email:- enquiries@mauritron.co.uk

REF. NO.		PART NO.	DESCRIPTION
1		BT-352430	⚠ TRANS POWER AM-A1T-40 [E] (AM-A102)
2		BT-352431	⚠ TRANS POWER AM-A1T-50 [B,S] (AM-A102)
3		BT-352426	⚠ TRANS POWER AM-A1T-70 [U] (AM-A102)
4		BT-358520	⚠ TRANS POWER AM-A201-40 [E] (AM-A202)
5		BT-358521	⚠ TRANS POWER AM-A201-50 [B,S] (AM-A202)
6		BT-358517	⚠ TRANS POWER AM-A201-70 [U] (AM-A202)
7	N	BT-364155	⚠ TRANS POWER AM-A202-20 [A] (AM-A202)
8	N	BT-364154	⚠ TRANS POWER AM-A202-30 [C] (AM-A202)
9		BT-358549	⚠ TRANS POWER AM-A301-40 [E,V] (AM-A302)
10		BT-358550	⚠ TRANS POWER AM-A301-50 [B,S] (AM-A302)
11		BT-358545	⚠ TRANS POWER AM-A301-70 [U] (AM-A302)
12	N	BT-364552	⚠ TRANS POWER AM-A302T-20 [C,A] (AM-A302)
13	N	BT-364649	⚠ TRANS POWER AM-A402T-20 [C,A] (AM-A402)
14	N	BT-364650	⚠ TRANS POWER AM-A402T-40 [E] (AM-A402)
15	N	BT-364651	⚠ TRANS POWER AM-A402T-50 [S] (AM-A402)
16	N	BT-364647	⚠ TRANS POWER AM-A402T-70 [U] (AM-A402)
17	N	BT-370321	⚠ TRANS POWER A2047-V [V] (AM-A202)
18		ED-354114	D LED BR-5507S RED
19	N	ED-361885	D LED SLP284C-51U GREEN
20	N	ED-361803	D LED SLP484C-51 YELLOW
21		ED-200213	D SILICON DBA40C-K15 200/2.6A (AM-A102)
22		ED-200749	D SILICON DBA60-K15 400/6.0A (AM-A302, 402)
23		ED-350748	D SILICON DBA60C-K15 (AM-A202)
24		ED-348990	D SILICON H DS446 (AM-A302, 402)
25		ED-301911	D SILICON H DS448
26		ED-306320	D ZENER H HZ15 2 (AM-A102, 202)
27		ED-313846	D ZENER H HZ16 3 (AM-A302, 402)
28		ED-322046	D ZENER H HZ18 1 (AM-A302, 402)
29		ED-329056	D ZENER H HZ22 2 (AM-A102, 202)
30		ED-346627	D ZENER H HZ33 2 (AM-A302, 402)
31		EF-359007	⚠ FUSE BET T 1.25A 250V (AM-A102, 202) [B]
32		EF-355398	⚠ FUSE BET T 2.00A 250V (AM-A302) [B]
33		EF-364518	⚠ FUSE BET T 2.50A 250V (AM-A102) [B]
34		EF-359225	⚠ FUSE BET T 3.15A 250V (AM-A202) [B]
35		EF-355399	⚠ FUSE BET T 5.00A 250V (AM-A302) [B]
36		EF-602550	⚠ FUSE SEMKO T 1.25A 250V (AM-A102, 202) [E,V,S]
37		EF-601301	⚠ FUSE SEMKO T 2.00A 250V (AM-A302) [E,V,S]
38		EF-623125	⚠ FUSE SEMKO T 2.50A 250V (AM-A102) [E,S]
39		EF-691007	⚠ FUSE SEMKO T 3.15A 250V (AM-A202, 402) [E,S,V]
40		EF-249851	⚠ FUSE SEMKO T 5.00A 250V (AM-A302) [E,V,S]
41		EF-242605	⚠ FUSE SEMKO T 6.30A 250V (AM-A402) [E,S]
42		EF-311839	⚠ FUSE TSC A 250V 1.60A (AM-A102) [U]
43		EF-326639	⚠ FUSE TSC A 250V 3.15A (AM-A102, 202, 302) [U]
44		EF-306952	⚠ FUSE TSC A 250V 4.00A (AM-A202, 402) [U]
45		EF-341260	⚠ FUSE TSC A 250V 8.00A (AM-A302, 402) [U]
46		EF-323080	⚠ FUSE TSC 125V 3.15A (AM-A202) [C,A]
47		EF-306957	⚠ FUSE TSC 125V 4.00A (AM-A202) [C,A]
48		EF-346139	⚠ FUSE TSC 125V 5.00A (AM-A302) [C,A]
49		EF-346115	⚠ FUSE TSC 125V 6.30A (AM-A402) [C,A]
50		EF-345658	⚠ FUSE TSC 125V 8.00A (AM-A302, 402) [C,A]
51	N	EI-366366	⚠ IC STK4038II (AM-A302) [U,E,V,B,S]
52	N	EI-364646	⚠ IC STK4044II (AM-A402)
53	N	EI-364549	⚠ IC STK4042II (AM-A302) [C,A]
54		EI-352644	⚠ IC STK4141II (AM-A102)
55		EI-358554	⚠ IC STK4152II (AM-A202) [U,E,V,B,S]
56		EI-364171	⚠ IC STK4171II (AM-A202) [C,A]
57		EI-358562	IC LB1416 (AM-A302, 402)
58		EI-337228	IC M5218L (AM-A302, 402)
59		EI-349719	IC M5218P
60		EI-344764	IC M5218P-21
61		EI-355211	IC M5227P
62		EI-354080	IC μPC1237H (AM-A302, 402)
63		EQ-337159	⚠ RELAY POWER G4Z-2282P 2NO 24V (AM-A302, 402)
64		ER-345466	⚠ R CT P F09 PLATE 5W R22K (AM-A302, 402)
65		ER-345751	⚠ R FUSE ERD2FC S10 1/4W 15R0G
66		ER-328278	⚠ R FUSE ERD2FC 1/4W 10R0G (AM-A102, 202)
67		ER-200746	⚠ R FUSE ERD2FC 1/4W 1000G
68		ES-361970	⚠ SW PUSH SDDLB1 01-1 (AM-A302, 402)
69		ES-337902	⚠ SW PUSH SDLD1P 01-1 (AM-A102, 202)
70		ES-349070	⚠ SW SELECTOR YKS11-0002 02-4 [U]
71		ES-358556	SW PUSH ESB-621519 2 THROW (AM-A302, 402)
72		ES-359963	SW PUSH ESB-621566 2 THROW (AM-A102, 202)
73		ES-358537	SW PUSH ESB-62968 4 THROW (AM-A102, 202)
74		ES-358564	SW PUSH ESB-62969 6 THROW (AM-A302, 402)
75	N	ES-364176	SW PUSH SPPH11 2-02-02N
76		ET-347026	⚠ TR 2SB507HP E,F (AM-A302, 402)
77		ET-344176	⚠ TR 2SD313HP F (AM-A302, 402)
78		ET-363953	TR DTA114TS (AM-A102, 202)
79		ET-353899	TR 2SA1317 S,T,U (AM-A302,402)
80		ET-305463	TR 2SA970 GR,BL (AM-A302, 402)
81		ET-322598	TR 2SB632K E,F (AM-A102, 202)
82		ET-307195	TR 2SC2240 GR,BL (AM-A302, 402)
83		ET-360067	TR 2SC3330 T,U F05 (AM-A302, 402)
84		ET-310148	TR 2SD612K E,F (AM-A102, 202)
85	N	EV-363157	R S-FIX H RH0615CN4J 3P 333 (AM-A302, 402)
86	N	EV-364175	VR SLIDE 25P1SV W105
87	N	EV-364174	VR SLIDE 25P2SVOA W104
88		EV-358563	VR SLIDE 60P2SVOM B254

NOTE:
N: New Parts

1. PC BOARD BLOCK (AM-A102)

REF. NO.	PART NO.	DESCRIPTION
1-1A	BA-A2047A030E	PC MAIN BLK AM-A102 [U]
1-1B	BA-A2047A030F	PC MAIN BLK AM-A102 [E,S,B]
1-2A	BA-A2047A020E	PC CONTROL BLK AM-A102 [U]
1-2B	BA-A2047A020C	PC CONTROL BLK AM-A202 [E,S,B]

1. PC BOARD BLOCK (AM-A202)

REF. NO.	PART NO.	DESCRIPTION
1-1A	BA-A2047A030A	PC MAIN BLK AM-A202 [U]
1-1B	BA-A2047A030B	PC MAIN BLK AM-A202 [C,A]
1-1C	BA-A2047A030C	PC MAIN BLK AM-A202 [E,B,S]
1-1D	BA-A2047A030D	PC MAIN BLK AM-A202 [V]
1-2A	BA-A2047A020A	PC CONTROL BLK AM-A202 [U]
1-2B	BA-A2047A020B	PC CONTROL BLK AM-A202 [C,A]
1-2C	BA-A2047A020C	PC CONTROL BLK AM-A202 [E,S,B]
1-2D	BA-A2047A020D	PC CONTROL BLK AM-A202 [V]

1. PC BOARD BLOCK (AM-A302)

REF. NO.	PART NO.	DESCRIPTION
1-1A	BA-A2048A020A	PC MAIN BLK AM-A302 [U]
1-1B	BA-A2048A020B	PC MAIN BLK AM-A302 [C,A]
1-1C	BA-A2048A020C	PC MAIN BLK AM-A302 [E,B,S]
1-1D	BA-A2048A020D	PC MAIN BLK AM-A302 [V]
1-2A	BA-A2048A030A	PC CONTROL BLK AM-A302 [U]
1-2B	BA-A2048A030B	PC CONTROL BLK AM-A302 [C,A]
1-2C	BA-A2048A030C	PC CONTROL BLK AM-A302 [E,B,S]
1-2D	BA-A2048A030D	PC CONTROL BLK AM-A302 [V]

1. PC BOARD BLOCK (AM-A402)

REF. NO.	PART NO.	DESCRIPTION
1-1A	BA-A2048A020E	PC MAIN BLK AM-A402 [U]
1-1B	BA-A2048A020F	PC MAIN BLK AM-A402 [C,A]
1-1C	BA-A2048A020G	PC MAIN BLK AM-A402 [E,S]
1-2A	BA-A2048A030E	PC CONTROL BLK AM-A402 [U]
1-2B	BA-A2048A030F	PC CONTROL BLK AM-A402 [C,A]
1-2C	BA-A2048A030G	PC CONTROL BLK AM-A402 [E,S]

NOTE:

(1) PC MAIN BLK consists of following PC BOARDS.
- MAIN PC BOARDS
- SPEAKERS PC BOARD
- HEADPHONE PC BOARD
- FILTER PC BOARD (AM-A202 [V], AM-A302 [V] ONLY)

(2) PC CONTROL BLK consists of following PC BOARDS.
- CONTROL PC BOARD
- FUNCTION PC BOARD
- EQUALIZER PC BOARD
- PIN J PC BOARD
- POWER SW PC BOARD

2. MAIN PC BOARD (AM-A102, 202)

REF. NO.	PART NO.	DESCRIPTION
2-C13	EC-352643	C EC V 472M 40DC (AM-A102)
2-C13A	EC-358538	C EC V CUT 472M 45.0DC (AM-A202 [U,E,V,B,S])
2-C13B	EC-361665	C EC V CUT 472M 50.0DC (AM-A202 [C,A])
2-C16	EC-352643	C EC V 472M 40DC
2-C16A	EC-358538	C EC V CUT 472M 45.0DC [U,E,V,B,S]
2-C16B	EC-361665	C EC V CUT 472M 50.0DC [C,A]
2-C19	EC-326583	C MMY V CUT CF921 473K 400DC
2-D1	ED-301911	⚠ D SILICON H DS448
2-D2	ED-329056	⚠ D ZENER H HZ22 2
2-D3	ED-306320	⚠ D ZENER H HZ15 2
2-D4	ED-306320	⚠ D ZENER H HZ15 2
2-D5	ED-200213	⚠ D SILICON DBA40C-K15 200/2.6A (AM-A102)
2-D5	ED-350748	⚠ D SILICON DBA60C-K15 (AM-A202)
2-D6	ED-306320	D ZENER H HZ15 2
2-FR1	ER-328278	⚠ R FUSE ERD2FC 1/4W 10R0G
2-FR2	ER-200746	⚠ R FUSE ERD2FC 1/4W 1000G
2-FR3	ER-328278	⚠ R FUSE ERD2FC 1/4W 10R0G
2-FR4	ER-328278	⚠ R FUSE ERD2FC 1/4W 10R0G
2-L1	EO-337880	COIL FIX 2 202AK-018 2R2K
2-R7	ER-325269	⚠ R CB H S10 FS RDS 1/4W 222J
2-R9	ER-333355	⚠ R CB H S10 FS RDS 1/4W 103J
2-R10, 11	ER-308875	⚠ R CB H S15 FS RDS 1/2W 100J (AM-A102)
2-R10, 11	ER-341940	⚠ R OMF H S15 FS 1W 100J (AM-A202)
2-R12	ER-341331	⚠ R OMF H S15 FS 1W 181J (AM-A102)
2-R12	ER-305722	⚠ R OMF H S20 FS 2W 221J (AM-A202)
2-R15	ER-328082	⚠ R CB H S10 FS RDS 1/4W 332J
2-R17, 21	ER-328082	⚠ R CB H S10 FS RDS 1/4W 332J [U,E,V,B,S]
2-R18, 22	ER-323074	⚠ R CB H S10 FS RDS 1/4W 102J [U,E,V,B,S]
2-R19	ER-318430	⚠ R OMF H S15 FS 1W 102J
2-SW2	ES-359963	SW PUSH ESB-621566 2 THROW
2-TR1	ET-310148	⚠ TR 2SD612K E,F
2-TR2	ET-322598	⚠ TR 2SB632K E,F
2-TR3	ET-363953	⚠ TR DTA114TS
2-F3A, 4A	EF-326639	⚠ FUSE TSC A 250V 3.15A (AM-A102 [U])
2-F3B, 4B	EF-623125	⚠ FUSE SEMKO T 2.50A 250V (AM-A102 [E,S])
2-F3C, 4C	EF-364518	⚠ FUSE BET T 2.50A 250V (AM-A102 [B])
2-F3A, 4A	EF-306952	⚠ FUSE TSC A 250V 4.00A (AM-A202 [U])
2-F3B, 4B	EF-306957	⚠ FUSE TSC 125V 4.00A (AM-A202 [C,A])
2-F3C, 4C	EF-691007	⚠ FUSE SEMKO T 3.15A 250V (AM-A202 [E,V,S])
2-F3D, 4D	EF-359225	⚠ FUSE BET T 3.15A 250V (AM-A202 [B])

For Service Manuals Contact
MAURITRON TECHNICAL SERVICES
8 Cherry Tree Rd, Chinnor
Oxon OX9 4QY
Tel:- 01844-351694 Fax:- 01844-352554
Email:- enquiries@mauritron.co.uk

2. MAIN PC BOARD (AM-A302, 402)

REF. NO	PART NO.	DESCRIPTION
2-C10, 11	EC-201627	C EC V F05 SM 100M 100DC (AM-A402)
2-C13, 14	EC-325320	C EC V F05 NP AWA 2R2M 50DC
2-C18	EC-334005	C EC V CUT NP SM 331M 10DC (AM-A402)
2-C18	EC-334005	C EC V CUT NP SM 331M 10DC
2-C22	EC-326583	⚠ C MMY V CUT CF921 473K 400DC
2-C23, 26	EC-358559	C EC V CUT SM 682M 55.0DC (AM-A302 [U,E,V,B,S])
2-C23A, 26A	EC-360273	C EC V CUT SM 682M 71.0DC (AM-A302 [C,A], AM-A402)
2-D1 to 4	ED-348990	D SILICON H DS446
2-D5	ED-346627	⚠ D ZENER H HZ33 2
2-D6	ED-200749	⚠ D SILICON DBA60-K15 400/6.0A
2-D7, 8	ED-322046	⚠ D ZENER H HZ18 1
2-D9	ED-301911	D SILICON H DS448
2-FR1, 2	ER-200746	⚠ R FUSE ERD2FC 1/4W 1000G
2-FR3 to 5	ER-345751	⚠ R FUSE ERD2FC S10 1/4W 15R0G
2-IC2	EI-349719	IC M5218P
2-IC3	EI-354080	IC μPC1237H
2-L1	EO-332116	COIL FIX 2 103AK-006A 2R2K
2-RL1	EQ-337159	⚠ RELAY POWER G4Z-2282P 2NO 24V
2-R11	ER-345466	⚠ R CT P F09 PLATE 5W R22K
2-R12	ER-341940	⚠ R OMF H S15 FS 1W 100J (AM-A302)
2-R12	ER-333023	⚠ R OMF H S20 FS 2W 100J (AM-A402)
2-R13	ER-341940	⚠ R OMF H S15 FS 1W 100J (AM-A302)
2-R13	ER-333023	⚠ R OMF H S20 FS 2W 100J (AM-A402)
2-R25	ER-333663	⚠ R CB H S15 FS RDS 1/2W 391J
2-R26	ER-306128	⚠ R CB H S15 FS RDS 1/2W 103J
2-R27	ER-333102	⚠ R OMF H S20 FS 2W 431J
2-SW1	ES-358556	SW PUSH ESB-621519 2 THROW
2-TR1	ET-307195	TR 2SC2240 GR,BL
2-TR2	ET-305463	TR 2SA970 GR,BL
2-TR3, 4	ET-344176	⚠ TR 2SD313HP F
2-TR5	ET-347026	⚠ TR 2SB507HP E,F
2-TR6	ET-360067	TR 2SC3330 T,U F05
2-F3A, 4A	EF-341260	⚠ FUSE TSC A 250V 8.00A [U]
2-F3B, 4B	EF-345658	⚠ FUSE TSC 125V 8.00A [C,A]
2-F3C, F4C	EF-249851	⚠ FUSE SEMKO T 5.00A 250V (AM-A302 [E,V,S])
2-F3C, 4C	EF-242605	⚠ FUSE SEMKO T 6.30A 250V (AM-A402 [E,S])
2-F3D, 4D	EF-355399	⚠ FUSE BET T 5.00A 250V (AM-A302 [B])

3. CONTROL PC BOARD (AM-A102, 202)

REF. NO.	PART NO.	DESCRIPTION
3-D1	ED-354114	D LED BR-5507S RED
3-D2	ED-361803	D LED SLP484C-51 YELLOW
3-D3 to 5	ED-361885	D LED SLP284C-51U GREEN
3-IC1	EI-355211	IC M5227P
3-R8, 9	ER-333598	R CB H S15 FS RDS 1/2W 102J
3-R10, 11	ER-306805	R CB H S15 FS RDS 1/2W 101J
3-SW1	ES-364176	SW PUSH SPPH11 2-02-02N
3-VR1 to 5	EV-364174	VR SLIDE 25P2SVOA W104
3-VR6	EV-364175	VR SLIDE 25P1SV W105
3-VR7	EV-358563	VR SLIDE 60P2SVOM B254

3. CONTROL PC BOARD (AM-A302, 402)

REF. NO.	PART NO.	DESCRIPTION
3-D1 to 3	ED-361885	D LED SLP284C-51U GREEN
3-D4, 5, 12	ED-354114	D LED BR-5507S RED
3-D6 to 9	ED-361885	D LED SLP284C-51U GREEN
3-D10, 11	ED-361803	D LED SLP484C-51 YELLOW
3-D13	ED-313846	D ZENER H HZ16 3
3-IC1	EI-355211	IC M5227P
3-IC2	EI-358562	IC LB1416
3-R15, 16	ER-333692	⚠ R CB H S15 FS RDS 1/2W 750J
3-R23	ER-333639	⚠ R CB H S15 FS RDS 1/2W 242J
3-R24 to 27	ER-333680	⚠ R CB H S15 FS RDS 1/2W 560J
3-SW1	ES-364176	SW PUSH SPPH11 2-02-02N
3-TR1	ET-360067	TR 2SC3330 T,U F05
3-TR2	ET-353899	TR 2SA1317 S,T,U
3-VR1 to 5	EV-364174	VR SLIDE 25P2SVOA W104
3-VR6	EV-364175	VR SLIDE 25P1SV W105
3-VR7	EV-358563	VR SLIDE 60P2SVOM B254
3-VR8	EV-363157	R S-FIX H RH0615CN4J 3P 333

4. FUNCTION PC BOARD (AM-A102, 202)

REF. NO.	PART NO.	DESCRIPTION
4-IC1	EI-349719	IC M5218P
4-R5, 6	ER-333616	R CB H S15 FS RDS 1/2W 151J
4-SW1	ES-358537	SW PUSH ESB-62968 4 THROW

4. FUNCTION PC BOARD (AM-A302, 402)

REF. NO.	PART NO.	DESCRIPTION
4-IC1	EI-337228	IC M5218L
4-R5, 6	ER-324935	R CB H S15 FS RDS 1/2W 181J
4-R7 to 12	ER-318430	R OMF H S15 FS 1W 102J (AM-A302)
4-R7 to 12	ER-324670	R OMF H S20 FS 2W 102J (AM-A402)
4-SW1	ES-358564	SW PUSH ESB-62969 6 THROW

5. EQUALIZER PC BOARD

REF. NO.	PART NO.	DESCRIPTION
5-IC1	EI-344764	IC M5218P-21
5-P1	EJ-336904	PIN J AJC-036-ACB P 6P
5-R9, 10	ER-333616	R CB H S15 FS RDS 1/2W 151J (AM-A102, 202)
5-R9, 10	ER-324935	R CB H S15 FS RDS 1/2W 181J (AM-A302, 402)

6. PIN J PC BOARD

REF. NO.	PART-NO.	DESCRIPTION
6-P1, 2	EJ-343365	PIN J YMC21-0063 P 4P
6-P3	EJ-364546	PIN J YKC21-0070A P 2P (AM-A102, 202)
6-P3, 4	EJ-343365	PIN J YMC21-0063 P 4P (AM-A302, 402)

7. SPEAKERS PC BOARD

REF. NO.	PART NO.	DESCRIPTION
7-TM902	EJ-349401	TERMINAL LEVER YKD21-0027 8P

8. HEAD PHONE PC BOARD

REF. NO.	PART NO.	DESCRIPTION
8-J1	EJ-358535	PHONE J 3P M1669-ACCB 6.3
8-L1	EO-336934	COIL FIX 1 LAL03KH 2R2M (AM-A202 [V], AM-A302 [V])

9. POWER SW PC BOARD

REF. NO.	PART NO.	DESCRIPTION
9-C1A	EC-320548	⚠ C CE V F 103Z 250AC [U]
9-C1B	EC-338411	⚠ C CE V FZ 103P 400AC [C,A]
9-C1C	EC-338496	⚠ C CE V FZ 472P 400AC [E,V,B,S]
9-SW1	ES-337902	⚠ SW PUSH SDLD1P 01-1 (AM-A102, AM-A202)
9-SW1	ES-361970	⚠ SW PUSH SDDLB1 01-1 (AM-A302, AM-A402)
9-F1A	EF-311839	⚠ FUSE TSC A 250V 1.60A (AM-A102 [U])
9-F1A	EF-326639	⚠ FUSE TSC A 250V 3.15A (AM-A202 [U])
9-F1A	EF-326639	⚠ FUSE TSC A 250V 3.15A (AM-A302 [U])
9-F1A	EF-306952	⚠ FUSE TSC A 250V 4.00A (AM-A402 [U])
9-F1B	EF-323080	⚠ FUSE TSC 125V 3.15A (AM-A202 [C,A])
9-F1B	EF-346139	⚠ FUSE TSC 125V 5.00A (AM-A302 [C,A])
9-F1B	EF-346115	⚠ FUSE TSC 125V 6.30A (AM-A402 [C,A])
9-F1C	EF-602550	⚠ FUSE SEMKO T 1.25A 250V (AM-A102 [E,S], 202 [E,V,S])
9-F1C	EF-601301	⚠ FUSE SEMKO T 2.00A 250V (AM-A302 [E,V,S])
9-F1C	EF-691007	⚠ FUSE SEMKO T 3.15A 250V (AM-A402 [E,S])
9-F1D	EF-359007	⚠ FUSE BET T 1.25A 250V (AM-A102 [B], 202 [B])
9-F1D	EF-355398	⚠ FUSE BET T 2.00A 250V (AM-A302 [B])
9-F2	EF-311839	⚠ FUSE TSC A 250V 1.60A (AM-A102 [U])
9-F2	EF-326639	⚠ FUSE TSC A 250V 3.15A (AM-A202 [U], 302 [U])
9-F2	EF-306952	⚠ FUSE TSC A 250V 4.00A (AM-A402 [U])

10. FILTER PC BOARD (AM-A202, 302 [V] ONLY)

REF. NO.	PART NO.	DESCRIPTION
10-L1	EO-338409	COIL LF FKOB160MH02 250UH [V]

For Service Manuals Contact
MAURITRON TECHNICAL SERVICES
8 Cherry Tree Rd, Chinnor
Oxon OX9 4QY
Tel:- 01844-351694 Fax:- 01844-352554
Email:- enquiries@mauritron.co.uk

ASSEMBLY BLOCK

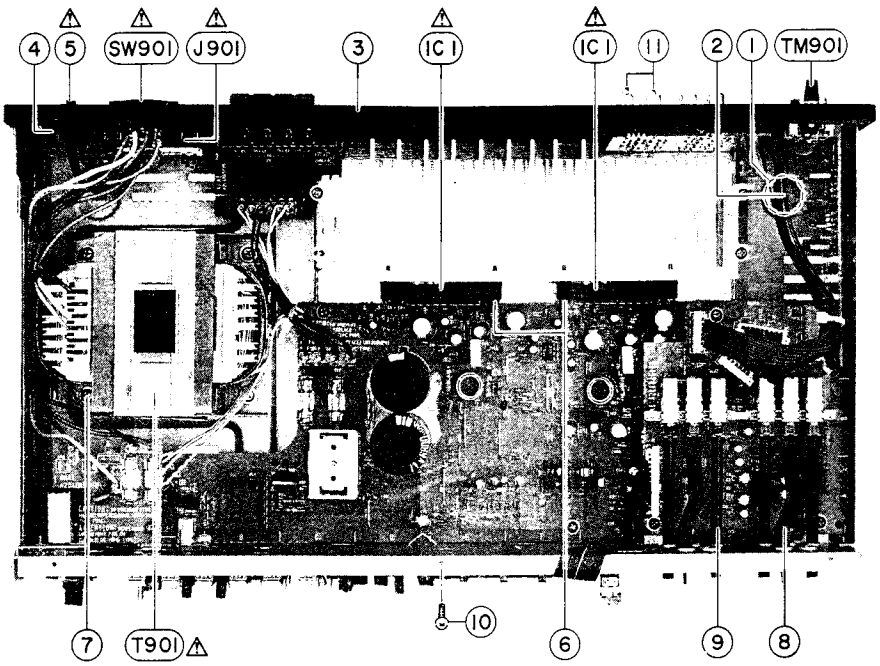

For Service Manuals Contact
MAURITRON TECHNICAL SERVICES
8 Cherry Tree Rd, Chinnor
Oxon OX9 4QY
Tel:- 01844-351694 Fax:- 01844-352554
Email:- enquiries@mauritron.co.uk

11. ASSEMBLY BLOCK

REF. NO.	PART NO.	DESCRIPTION
11-1	SA-332850	ROUND FOOT
11-2	ZS-311745	T2BR30×08STL BNI PW080 (FOOT FIX)
11-3A	SP-364012A	PANEL REAR AM-A102 [U]
11-3A	SP-364012D	PANEL REAR AM-A202 [U]
11-3A	SP-364012H	PANEL REAR AM-A302 [U]
11-3A	SP-364012M	PANEL REAR AM-A402 [U]
11-3B	SP-364012E	PANEL REAR AM-A202 [C,A]
11-3B	SP-364012J	PANEL REAR AM-A302 [C,A]
11-3B	SP-364012N	PANEL REAR AM-A402 [C,A]
11-3B	SP-364012B	PANEL REAR AM-A102 [E]
11-3C	SP-364012F	PANEL REAR AM-A202 [E,V]
11-3C	SP-364012K	PANEL REAR AM-A302 [E,V]
11-3C	SP-364012P	PANEL REAR AM-A402 [E]
11-3C	SP-364012C	PANEL REAR AM-A102 [S,B]
11-3D	SP-364012G	PANEL REAR AM-A202 [B,S]
11-3D	SP-364012L	PANEL REAR AM-A302 [B,S]
11-3D	SP-364012Q	PANEL REAR AM-A402 [S]
11-4	ZS-308846	T2BR30×08STL BZN PROJECTION (PANEL REAR FIX)
11-5A	EW-354515	⚠ AC CORD 2 CORES KP-700A, VFF-CB U/T [U]
11-5B	EW-358513	⚠ AC CORD 2 CORES KD-8W, SPT-2-CB UC [C,A]
11-5C	EW-354625	⚠ AC CORD 2 CORES KP-419C, LTCE-2F E [E]
11-5D	EW-354513	⚠ AC CORD 2 CORES KP-419C, LTCE-2F EV [V]
11-5E	EW-354512	⚠ AC CORD 2 CORES LTBS-2F-CB B [B]
11-5F	EW-354514	⚠ AC CORD 2 CORES KP-560, LTSA2F-CB S [S]
11-6	ZS-321279	T2BR30×18STL CMT (IC FIX)
11-7	ZS-346742	ST BID40×08STL CMT CUP (TRANS POWER FIX)
11-8	TA-358475	JOINT (A)
11-9	TA-358473B	JOINT (B)-2
11-10	ZS-498273	T2BR30×08STL CMT PW080 (PANEL FRONT FIX)
11-11	EJ-348218	PLUG SHORT PIN P2138
11-T901A	BT-352426	⚠ TRANS POWER AM-A1T-70 (AM-A102 [U])
11-T901A	BT-358517	⚠ TRANS POWER AM-A201-70 (U) (AM-A202 [U])
11-T901A	BT-358545	⚠ TRANS POWER AM-A301-70 (U) (AM-A302 [U])
11-T901A	BT-364647	⚠ TRANS POWER AM-A402T-70 (U) (AM-A402 [U])
11-T901B	BT-364154	⚠ TRANS POWER AM-A202-30 (AM-A202 [C])
11-T901B	BT-364552	⚠ TRANS POWER AM-A302T-20 (C,A) (AM-A302 [C,A])
11-T901B	BT-364649	⚠ TRANS POWER AM-A402T-20 (C,A) (AM-A402 [C,A])
11-T901C	BT-364155	⚠ TRANS POWER AM-A202-20 (AM-A202 [A])
11-T901B	BT-352430	⚠ TRANS POWER AM-A1T-40 (AM-A102 [E])
11-T901D	BT-358520	⚠ TRANS POWER AM-A201-40 (E) (AM-A202 [E])
11-T901C	BT-358549	⚠ TRANS POWER AM-A301-40 (E,V) (AM-A302 [E,V])
11-T901C	BT-364650	⚠ TRANS POWER AM-A402T-40 (E) (AM-A402 [E])
11-T901C	BT-352431	⚠ TRANS POWER AM-A1T-50 (AM-A102 [B,S])
11-T901E	BT-358521	⚠ TRANS POWER AM-A201-50 (B,S) (AM-A202 [B,S])
11-T901D	BT-358550	⚠ TRANS POWER AM-A301-50 (B,S) (AM-A302 [B,S])
11-T901D	BT-364651	⚠ TRANS POWER AM-A402T-50 (S) (AM-A402 [S])
11-T901F	BT-370321	⚠ TRANS POWER A2047-V (AM-A202 [V])
11-J901A	EJ-337405	⚠ SOCKET OUTLET S2T733T164 JUC 3×2P [U]
11-J901B	EJ-352642	⚠ SOCKET OUTLET S2T733T114T [C,A]
11-SW901	ES-349070	⚠ SW SELECTOR YKS11-0002 02-4 [U]
11-TM901	EJ-329610	TERMINAL W/SCREW UB-0067 L 1P
11-IC1	EI-352644	⚠ IC STK4141II (AM-A102)
11-IC1A	EI-358554	⚠ IC STK4152II (AM-A202 [U,E,V,B,S])
11-IC1A	EI-366366	⚠ IC STK4038II (AM-A302 [U,E,V,B,S])
11-IC1	EI-364646	⚠ IC STK4044II (AM-A402)
11-IC1B	EI-364171	⚠ IC STK4171II (AM-A202 [C,A])
11-IC1B	EI-364549	⚠ IC STK4042II (AM-A302 [C,A])

FINAL ASSEMBLY BLOCK

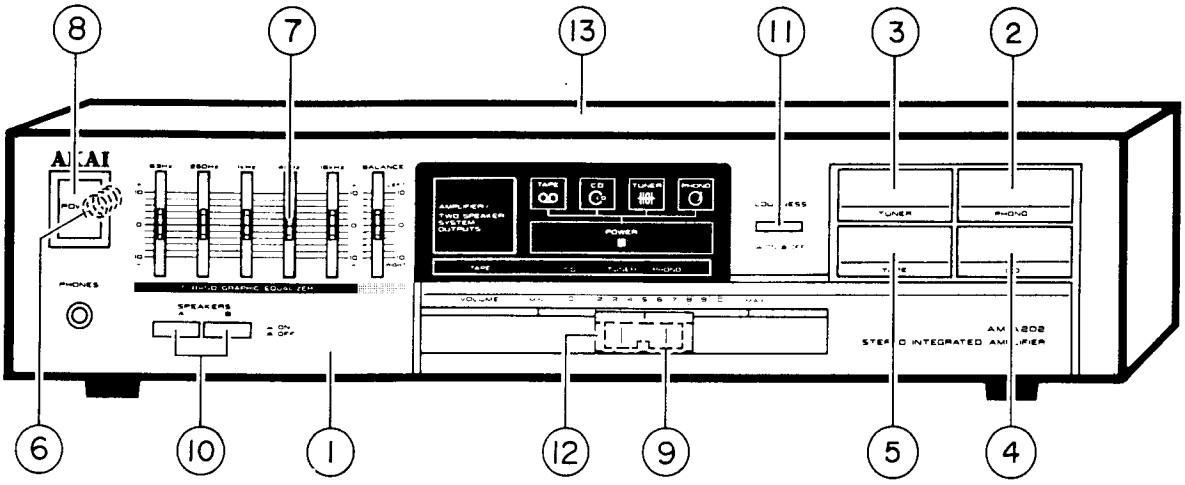

12. FINAL ASSEMBLY BLOCK (AM-A102, 202)

REF. NO.	PART NO.	DESCRIPTION
	PANEL FRONT BLOCK	
12-1	BD-A2047A090C	PANEL FRONT BLK AM-A102
12-1	BD-A2047A090A	PANEL FRONT BLK AM-A202
12-1-B	BD-A2047A090D	PANEL FRONT BLK AM-A102-B
12-1-B	BD-A2047A090B	PANEL FRONT BLK AM-A202-B
12-2	SK-363997A	KNOB FUNCTION (A) PHONO
12-2-B	SK-363997E	KNOB FUNCTION (A) PHONO-B
12-3	SK-363997B	KNOB FUNCTION (A) TUNER
12-3-B	SK-363997F	KNOB FUNCTION (A) TUNER-B
12-4	SK-363997C	KNOB FUNCTION (A) CD
12-4-B	SK-363997G	KNOB FUNCTION (A) CD-B
12-5	SK-363997D	KNOB FUNCTION (A) TAPE
12-5-B	SK-363997H	KNOB FUNCTION (A) TAPE-B
12-6	ZG-355238	SP PUSH POWER
12-7	SK-363999	KNOB EQ
12-7-B	SK-363999B	KNOB EQ-B
12-8	SK-343017C	KNOB POWER (2)
12-8-B	SK-343017F	KNOB POWER-B

REF. NO.	PART NO.	DESCRIPTION
	FINAL ASSEMBLY BLOCK	
12-9	SZ-358557	SHEET
12-10	SK-358479B	KNOB (F-2)
12-10-B	SK-358479A	KNOB (F-1)
12-11	SK-363998A	KNOB LOUDNESS
12-11-B	SK-363998B	KNOB LOUDNESS-B
12-12	SK-358474B	KNOB (D-2)
12-12-B	SK-358474A	KNOB (D-1)
12-13	SP-349925A	COVER UPPER
12-13-B	SP-349925C	COVER UPPER-B

NOTE:
PANEL FRONT BLK includes 12-2 to 12-8.
SYMBOL FOR COLOR VARIATION
NON: STANDARD COLOR
-B : BLACK

For Service Manuals Contact
MAURITRON TECHNICAL SERVICES
8 Cherry Tree Rd, Chinnor
Oxon OX9 4QY
Tel:- 01844-351694 Fax:- 01844-352554
Email:- enquiries@mauritron.co.uk

FINAL ASSEMBLY BLOCK

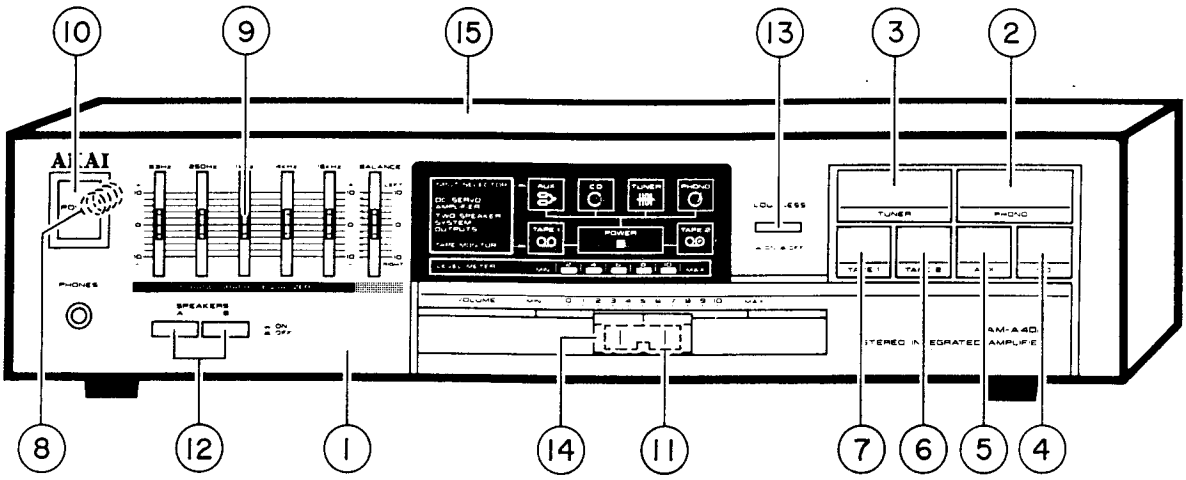

12. FINAL ASSEMBLY BLOCK (AM-A302, 402)

REF. NO.	PART NO.	DESCRIPTION
	PANEL FRONT BLOCK	
12-1	BD-A2048A040A	PANEL FRONT BLK AM-A302
12-1	BD-A2048A040C	PANEL FRONT BLK AM-A402
12-1-B	BD-A2048A040B	PANEL FRONT BLK AM-A302-B
12-1-B	BD-A2048A040D	PANEL FRONT BLK AM-A402-B
12-2	SK-363997A	KNOB FUNCTION (A) PHONO
12-2-B	SK-363997E	KNOB FUNCTION (A) PHONO-B
12-3	SK-363997B	KNOB FUNCTION (A) TUNER
12-3-B	SK-363997F	KNOB FUNCTION (A) TUNER-B
12-4	SK-364457A	KNOB FUNCTION (B) CD
12-4-B	SK-364457E	KNOB FUNCTION (B) CD-B
12-5	SK-364457B	KNOB FUNCTION (B) AUX
12-5-B	SK-364457F	KNOB FUNCTION (B) AUX-B
12-6	SK-364457C	KNOB FUNCTION (B) TAPE 2
12-6-B	SK-364457G	KNOB FUNCTION (B) TAPE 2-B
12-7	SK-364457D	KNOB FUNCTION (B) TAPE 1
12-7-B	SK-364457H	KNOB FUNCTION (B) TAPE 1-B
12-8	ZG-355238	SP PUSH POWER
12-9	SK-363999	KNOB EQ
12-9-B	SK-363999B	KNOB EQ-B
12-10	SK-343017C	KNOB POWER (2)
12-10-B	SK-343017F	KNOB POWER-B

REF. NO.	PART NO.	DESCRIPTION
	FINAL ASSEMBLY BLOCK	
12-11	SZ-358557	SHEET
12-12	SK-358479B	KNOB (F-2)
12-12-B	SK-358479A	KNOB (F-1)
12-13	SK-363998A	KNOB LOUDNESS
12-13-B	SK-363998B	KNOB LOUDNESS-B
12-14	SK-358474B	KNOB (D-2)
12-14-B	SK-358474A	KNOB (D-1)
12-15	SP-349925E	COVER UPPER (B) (AM-A302)
12-15	SP-349925G	COVER UPPER (C) (AM-A402)
12-15-B	SP-349925F	COVER UPPER (B)-B (AM-A302)
12-15-B	SP-349925H	COVER UPPER (C)-B (AM-A402)

NOTE:
PANEL FRONT BLK includes 12-2 to 12-10.
SYMBOL FOR COLOR VARIATION
NON: STANDARD COLOR
-B : BLACK

For Service Manuals Contact
MAURITRON TECHNICAL SERVICES
8 Cherry Tree Rd, Chinnor
Oxon OX9 4QY
Tel:- 01844-351694 Fax:- 01844-352554
Email:- enquiries@mauritron.co.uk

AM-A102/A202

PART NO.	REF. NO.	PART NO.	REF. NO.	PART NO.	REF. NO.	PART NO.	REF. NO.
BA-A2047A020A	1-2A	EF-323080	9-F1B	ER-333616	5-R9	SP-364012D	11-3A
BA-A2047A020B	1-2B	EF-326639	9-F1A,2-F3A	ER-333616	5-R10	SP-364012E	11-3B
BA-A2047A020C	1-2C,1-2B	EF-326639	9-F2,2-F4A	ER-341331	2-R12	SP-364012F	11-3C
BA-A2047A020D	1-2D	EF-359007	9-F1D	ER-341940	2-R10	SP-364012G	11-3D
BA-A2047A020E	1-2A	EF-359225	2-F3D	ER-341940	2-R11	SZ-358557	12-9
BA-A2047A030A	1-1A	EF-359225	2-F4D	ES-337902	9-SW1	TA-358473B	11-9
BA-A2047A030B	1-1B	EF-364518	2-F3C,F4C	ES-349070	11-SW901	TA-358475	11-8
BA-A2047A030C	1-1C	EF-602550	9-F1C	ES-358537	4-SW1	ZG-355238	12-6
BA-A2047A030D	1-1D	EF-623125	2-F3B,F4B	ES-359963	2-SW2	ZS-308846	11-4
BA-A2047A030E	1-1A	EF-691007	2-F3C	ES-364176	3-SW1	ZS-311745	11-2
BA-A2047A030F	1-1B	EF-691007	2-F4C	ET-310148	2-TR1	ZS-321279	11-6
BD-A2047A090A	12-1	EI-344764	5-IC1	ET-322598	2-TR2	ZS-346742	11-7
BD-A2047A090B	12-1-B	EI-349719	4-IC1	ET-363953	2-TR3	ZS-498273	11-10
BD-A2047A090C	12-1	EI-352644	11-IC1	EV-358563	3-VR7		
BD-A2047A090D	12-1-B	EI-355211	3-IC1	EV-364174	3-VR1		
BT-352426	11-T901A	EI-358554	11-IC1A	EV-364174	3-VR2		
BT-352430	11-T901B	EI-364171	11-IC1B	EV-364174	3-VR3		
BT-352431	11-T901C	EJ-329610	11-TM901	EV-364174	3-VR4		
BT-358517	11-T901A	EJ-336904	5-P1	EV-364174	3-VR5		
BT-358520	11-T901D	EJ-337405	11-J901A	EV-364175	3-VR6		
BT-358521	11-T901E	EJ-343365	6-P1	EW-354512	11-5E		
BT-364154	11-T901B	EJ-343365	6-P2	EW-354513	11-5D		
BT-364155	11-T901C	EJ-348218	11-11	EW-354514	11-5F		
BT-370321	11-T901F	EJ-349401	7-TM902	EW-354515	11-5A		
EC-320548	9-C1A	EJ-352642	11-J901B	EW-354625	11-5C		
EC-326583	2-C19	EJ-358535	8-J1	EW-358513	11-5B		
EC-338411	9-C1B	EJ-364546	6-P3	SA-332850	11-1		
EC-338496	9-C1C,9-C1B	EO-336934	8-L1	SK-343017C	12-8		
EC-352643	2-C13,C16	EO-337880	2-L1	SK-343017F	12-8-B		
EC-358538	2-C16A	EO-338409	10-L1	SK-358474A	12-12-B		
EC-358538	2-C13A	ER-200746	2-FR2	SK-358474B	12-12		
EC-361665	2-C13B	ER-305722	2-R12	SK-358479A	12-10-B		
EC-361665	2-C16B	ER-306805	3-R10	SK-358479B	12-10		
ED-200213	2-D5	ER-306805	3-R11	SK-363997A	12-2		
ED-301911	2-D1	ER-308875	2-R10,R11	SK-363997B	12-3		
ED-306320	2-D3	ER-318430	2-R19	SK-363997C	12-4		
ED-306320	2-D4	ER-323074	2-R18	SK-363997D	12-5		
ED-306320	2-D6	ER-323074	2-R22	SK-363997E	12-2-B		
ED-329056	2-D2	ER-325269	2-R7	SK-363997F	12-3-B		
ED-350748	2-D5	ER-328082	2-R15	SK-363997G	12-4-B		
ED-354114	3-D1	ER-328082	2-R17	SK-363997H	12-5-B		
ED-361803	3-D2	ER-328082	2-R21	SK-363998A	12-11		
ED-361885	3-D3	ER-328278	2-FR1	SK-363998B	12-11-B		
ED-361885	3-D4	ER-328278	2-FR3	SK-363999	12-7		
ED-361885	3-D5	ER-328278	2-FR4	SK-363999B	12-7-B		
EF-306952	2-F3A	ER-333355	2-R9	SP-349925A	12-13		
EF-306952	2-F4A	ER-333598	3-R8	SP-349925C	12-13-B		
EF-306957	2-F3B	ER-333598	3-R9	SP-364012A	11-3A		
EF-306957	2-F4B	ER-333616	4-R5	SP-364012B	11-3B		
EF-311839	9-F1A,F2	ER-333616	4-R6	SP-364012C	11-3C		

For Service Manuals Contact
MAURITRON TECHNICAL SERVICES
8 Cherry Tree Rd, Chinnor
Oxon OX9 4QY
Tel:- 01844-351694 Fax:- 01844-352554
Email:- enquiries@mauritron.co.uk

AM-A302/A402

PART NO.	REF. NO.	PART NO.	REF. NO.	PART NO.	REF. NO.	PART NO.	REF. NO.
BA-A2048A020A	1-1A	EF-242605	2-F3C,F4C	ER-333680	3-R25	SK-364457H	12-7-B
BA-A2048A020B	1-1B	EF-249851	2-F3C	ER-333680	3-R26	SP-349925E	12-15
BA-A2048A020C	1-1C	EF-249851	2-F4C	ER-333680	3-R27	SP-349925F	12-15-B
BA-A2048A020D	1-1D	EF-306952	9-F1A,F2	ER-333692	3-R15	SP-349925G	12-15
BA-A2048A020E	1-1A	EF-326639	9-F1A	ER-333692	3-R16	SP-349925H	12-15-B
BA-A2048A020F	1-1B	EF-326639	9-F2	ER-341940	2-R12	SP-364012H	11-3A
BA-A2048A020G	1-1C	EF-341260	2-F3A	ER-341940	2-R13	SP-364012J	11-3B
BA-A2048A030A	1-2A	EF-341260	2-F4A	ER-345466	2-R11	SP-364012K	11-3C
BA-A2048A030B	1-2B	EF-345658	2-F3B	ER-345751	2-FR3	SP-364012L	11-3D
BA-A2048A030C	1-2C	EF-345658	2-F4B	ER-345751	2-FR4	SP-364012M	11-3A
BA-A2048A030D	1-2D	EF-346115	9-F1B	ER-345751	2-FR5	SP-364012N	11-3B
BA-A2048A030E	1-2A	EF-346139	9-F1B	ES-349070	11-SW901	SP-364012P	11-3C
BA-A2048A030F	1-2B	EF-355398	9-F1D	ES-358556	2-SW1	SP-364012Q	11-3D
BA-A2048A030G	1-2C	EF-355399	2-F3D	ES-358564	4-SW1	SZ-358557	12-11
BD-A2048A040A	12-1	EF-355399	2-F4D	ES-361970	9-SW1	TA-358473B	11-9
BD-A2048A040B	12-1-B	EF-601301	9-F1C	ES-364176	3-SW1	TA-358475	11-8
BA-A2048A040C	12-1	EF-691007	9-F1C	ET-305463	2-TR2	ZG-355238	12-8
BA-A2048A040D	12-1-B	EI-337228	4-IC1	ET-307195	2-TR1	ZS-308846	11-4
BT-358545	11-T901A	EI-344764	5-IC1	ET-344176	2-TR3	ZS-311745	11-2
BT-358549	11-T901C	EI-349719	2-IC2	ET-344176	2-TR4	ZS-321279	11-6
BT-358550	11-T901D	EI-354080	2-IC3	ET-347026	2-TR5	ZS-346742	11-7
BT-364552	11-T901B	EI-355211	3-IC1	ET-353899	3-TR2	ZS-498273	11-10
BT-364647	11-T901A	EI-358562	3-IC2	ET-360067	2-TR6		
BT-364649	11-T901B	EI-364549	11-IC1B	ET-360067	3-TR1		
BT-364650	11-T901C	EI-364646	11-IC1	EV-358563	3-VR7		
BT-364651	11-T901D	EI-366366	11-IC1A	EV-363157	3-VR8		
EC-201627	2-C10,C11	EJ-329610	11-TM901	EV-364174	3-VR1		
EC-320548	9-C1A	EJ-336904	5-P1	EV-364174	3-VR2		
EC-325320	2-C13	EJ-337405	11-J901A	EV-364174	3-VR3		
EC-325320	2-C14	EJ-343365	6-P1	EV-364174	3-VR4		
EC-326583	2-C22	EJ-343365	6-P2	EV-364174	3-VR5		
EC-334005	2-C18	EJ-343365	6-P3	EV-364175	3-VR6		
EC-338411	9-C1B	EJ-343365	6-P4	EW-354512	11-5E		
EC-338496	9-C1C	EJ-348218	11-11	EW-354513	11-5D		
EC-358559	2-C23	EJ-349401	7-TM902	EW-354514	11-5F,11-5D		
EC-358559	2-C26	EJ-352642	11-J901B	EW-354515	11-5A		
EC-360273	2-C23A	EJ-358535	8-J1	EW-354625	11-5C		
EC-360273	2-C26A	EO-332116	2-L1	EW-358513	11-5B		
ED-200749	2-D6	EO-336934	8-L1	SA-332850	11-1		
ED-301911	2-D9	EO-338409	10-L1	SK-343017C	12-10		
ED-313846	3-D13	EQ-337159	2-RL1	SK-343017F	12-10-B		
ED-322046	2-D7	ER-200746	2-FR1	SK-358474A	12-14-B		
ED-322046	2-D8	ER-200746	2-FR2	SK-358474B	12-14		
ED-346627	2-D5	ER-306128	2-R26	SK-358479A	12-12-B		
ED-348990	2-D1	ER-318430	4-R7	SK-358479B	12-12		
ED-348990	2-D2	ER-318430	4-R8	SK-363997A	12-2		
ED-348990	2-D3	ER-318430	4-R9	SK-363997B	12-3		
ED-348990	2-D4	ER-318430	4-R10	SK-363997E	12-2-B		
ED-354114	3-D4	ER-318430	4-R11	SK-363997F	12-3-B		
ED-354114	3-D5	ER-318430	4-R12	SK-363998A	12-13		
ED-354114	3-D12	ER-324670	4-R7 to R12	SK-363998B	12-13-B		
ED-361803	3-D10	ER-324935	4-R5	SK-363999	12-9		
ED-361803	3-D11	ER-324935	4-R6	SK-363999B	12-9-B		
ED-361885	3-D1	ER-324935	5-R9	SK-364457A	12-4		
ED-361885	3-D2	ER-324935	5-R10	SK-364457B	12-5		
ED-361885	3-D3	ER-333023	2-R13	SK-364457C	12-6		
ED-361885	3-D6	ER-333102	2-R27	SK-364457D	12-7		
ED-361885	3-D7	ER-333639	3-R23	SK-364457E	12-4-B		
ED-361885	3-D8	ER-333663	2-R25	SK-364457F	12-5-B		
ED-361885	3-D9	ER-333680	3-R24	SK-364457G	12-6-B		

For Service Manuals Contact
MAURITRON TECHNICAL SERVICES
8 Cherry Tree Rd, Chinnor
Oxon OX9 4QY
Tel:- 01844-351694 Fax:- 01844-352554
Email:- enquiries@mauritron.co.uk

ABBREVIATIONS (AMPLIFIER)

ABBREVIATIONS	EXPLANATION
AC	Alternating Current
AMP	AMPlifier
CD	Compact Disc
DC	Direct Current
GND	GrouND
MC	Moving Coil
MM	Moving Magnet
PCB	Printed Circuit Board
REC	RECord
SW	SWitch
V.DISC	Video DISC
VR	Variable Resistance
VTR	Video Tape Recorder

For Service Manuals Contact
MAURITRON TECHNICAL SERVICES
8 Cherry Tree Rd, Chinnor
Oxon OX9 4QY
Tel:- 01844-351694 Fax:- 01844-352554
Email:- enquiries@mauritron.co.uk

AKAI

MODEL AM-A102
MODEL AM-A202
MODEL AM-A302
MODEL AM-A402

SCHEMATIC DIAGRAM AND PC BOARDS

For Service Manuals Contact
MAURITRON TECHNICAL SERVICES
8 Cherry Tree Rd, Chinnor
Oxon OX9 4QY
Tel:- 01844-351694 Fax:- 01844-352554
Email:- enquiries@mauritron.co.uk

TABLE OF CONTENTS

1. BLOCK DIAGRAM AM-A102/202 2
2. BLOCK DIAGRAM AM-A302/402 3
3. PIN JACK PCB, FUNCTION PCB EQUALIZER PCB 4
4. POWER SW PCB, FILTER PCB, CONTROL PCB 5
5. MAIN PCB AM-A102/202 6
6. SCHEMATIC DIAGRAM AM-A102/202 7
7. SCHEMATIC DIAGRAM AM-A302/402 8
8. MAIN PCB AM-A302/402 9
9. POWER SW PCB, FILTER PCB, CONTROL PCB 10
10. PIN JACK PCB, FUNCTION PCB EQUALIZER PCB 11
11. ICs 12

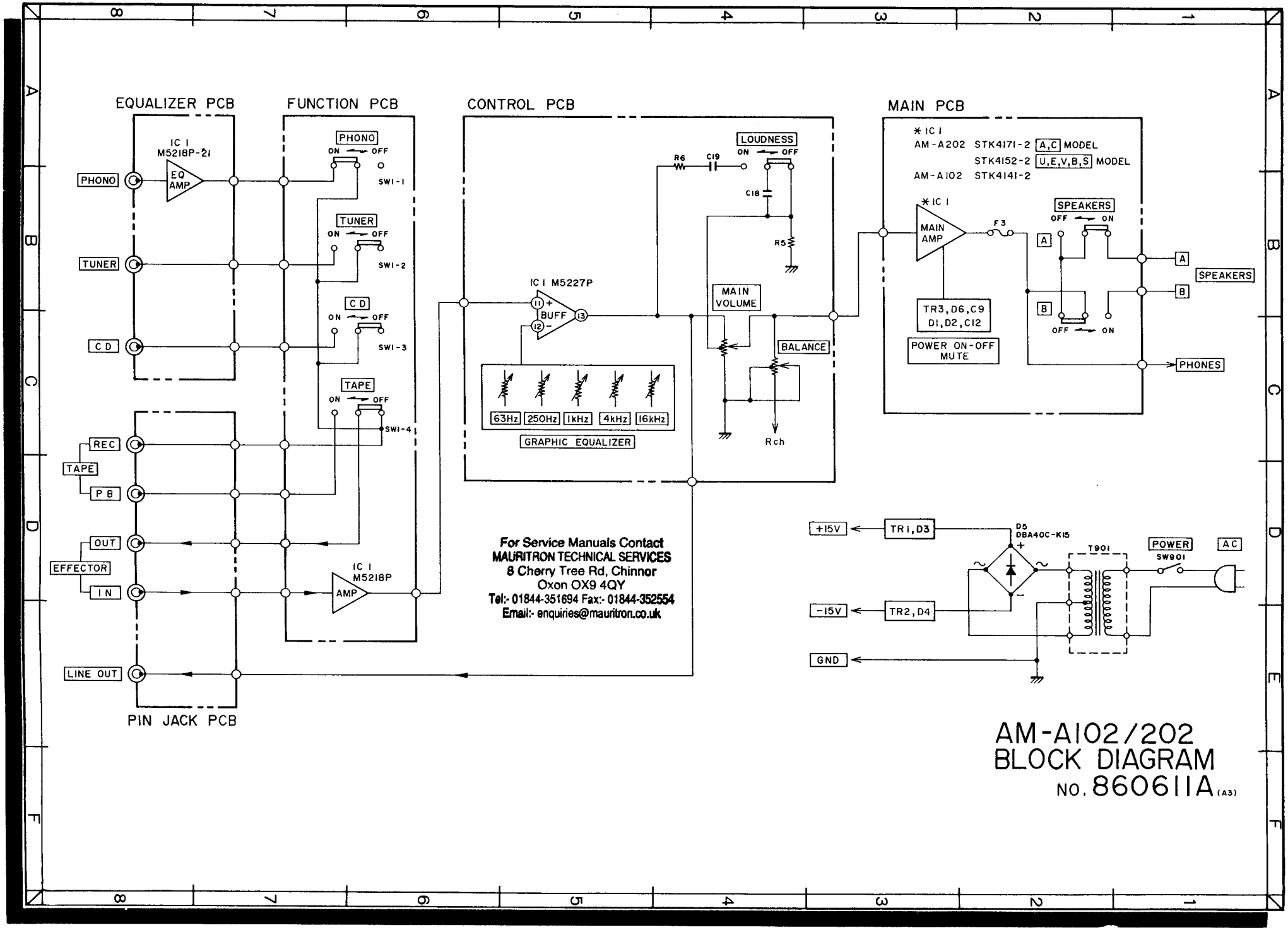
EQUALIZER PCB
FUNCTION PCB
CONTROL PCB
MAIN PCB
IC 1
M5218P-21
EQ AMP
PHONO
TUNER
CD
TAPE
REC
PB
OUT
EFFECTOR
IN
LINE OUT
PIN JACK PCB
ON OFF
SW1-1
SW1-2
SW1-3
SW1-4
IC 1
M5218P
AMP
IC 1 M5227P
BUFF
63Hz
250Hz
1kHz
4kHz
16kHz
GRAPHIC EQUALIZER
R6
C19
C18
R5
LOUDNESS
MAIN VOLUME
BALANCE
Rch
* IC 1
AM-A202 STK4171-2 A,C MODEL
STK4152-2 U,E,V,B,S MODEL
AM-A102 STK4141-2
MAIN AMP
F3
SPEAKERS
OFF ON
A
B
TR3, D6, C9
D1, D2, C12
POWER ON-OFF MUTE
PHONES
+15V
-15V
GND
TR1, D3
TR2, D4
D5
DBA40C-K15
T901
POWER
SW901
AC
For Service Manuals Contact
MAURITRON TECHNICAL SERVICES
8 Cherry Tree Rd, Chinnor
Oxon OX9 4QY
Tel:- 01844-351694 Fax:- 01844-352554
Email:- enquiries@mauritron.co.uk
AM-A102/202
BLOCK DIAGRAM
NO. 860611A (A3)

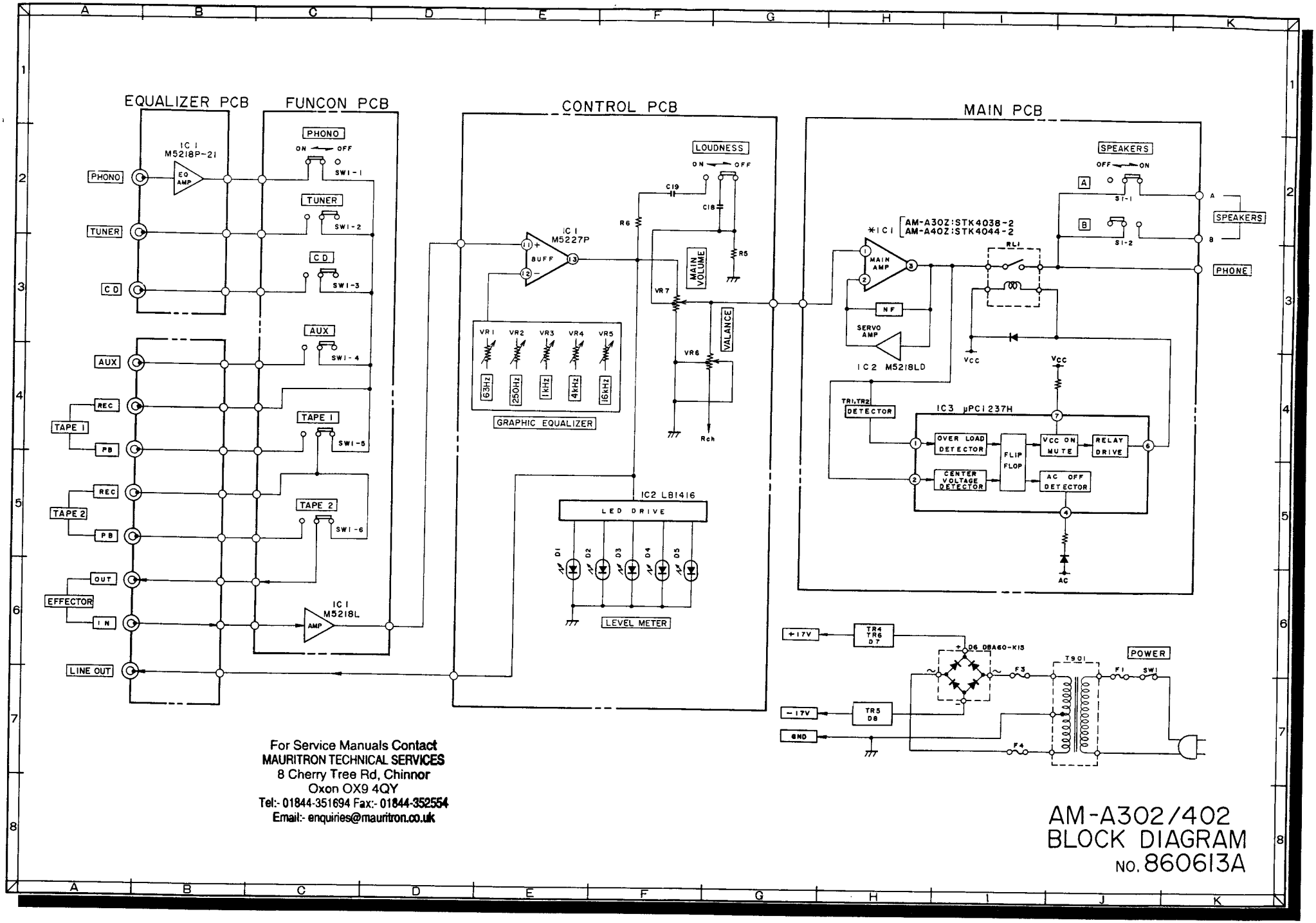

For Service Manuals Contact
MAURITRON TECHNICAL SERVICES
8 Cherry Tree Rd, Chinnor
Oxon OX9 4QY
Tel:- 01844-351694 Fax:- 01844-352554
Email:- enquiries@mauritron.co.uk

AM-A302/402
BLOCK DIAGRAM
NO. 860613A

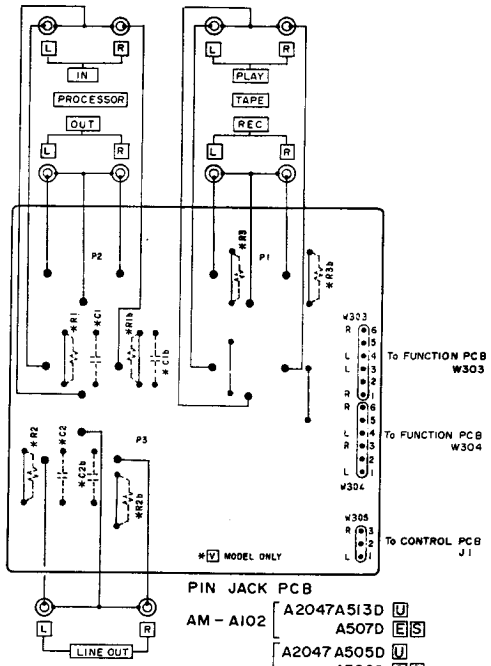

PIN JACK PCB

AM - A102	A2047A513D	U
	A507D	E S
AM - A202	A2047A505D	U
	A506D	C A
	A507D	E B S
	A508D	V

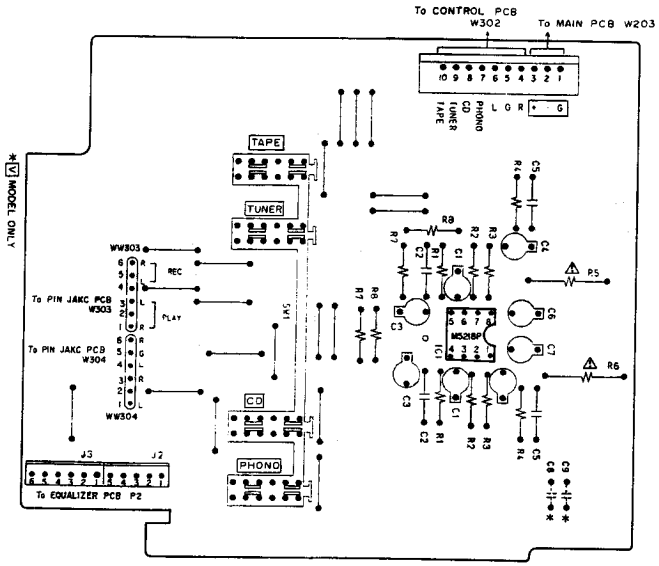

FUNCTION PCB

AM - A102	A2047A513B	U
	A507B	E S
AM - A202	A2047A505B	U
	A506B	C A
	A507B	E B S
	A508B	V

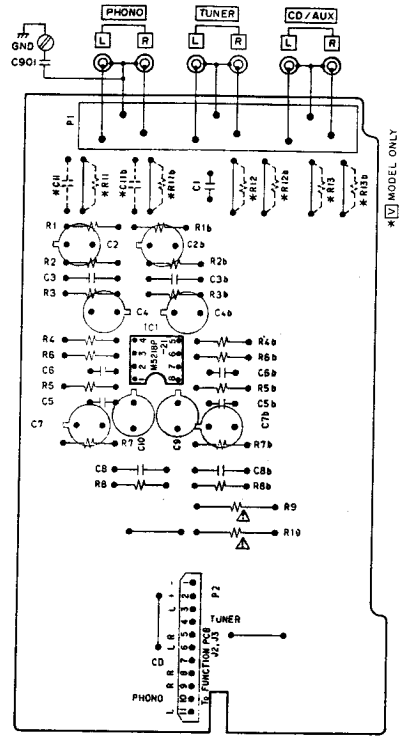

EQUALIZER PCB

AM - A102	A2047A513C	U
	A507C	E S
AM - A202	A2047A505C	U
	A506C	C A
	A507C	E B S
	A508C	V

For Service Manuals Contact
MAURITRON TECHNICAL SERVICES
8 Cherry Tree Rd, Chinnor
Oxon OX9 4QY
Tel:- 01844-351694 Fax:- 01844-352554
Email:- enquiries@mauritron.co.uk

WARNING: ⚠ INDICATES SAFETY CRITICAL COMPONENTS FOR CONTINUED SAFETY, REPLACE SAFETY CRITICAL COMPONENTS ONLY WITH MANUFACTURER'S RECOMMENDED PARTS

AVERTISSEMENT: ⚠ IL INDIQUE LES COMPOSANTS CRITIQUES DE SÉCURITÉ. POUR MAINTENIR LE DEGRÉ DE SÉCURITÉ DE L'APPAREIL, NE REMPLACER QUE DES PIÈCES RECOMMANDEES PAR LE FABRICANT

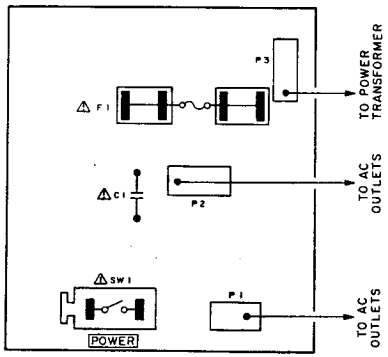

POWER SW PCB A2047A506E [C][A]
(AM-A202)

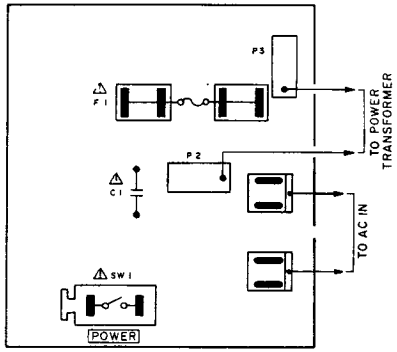

POWER SW PCB A2047A507E
[E][S] (AM-A102)
[E][B][S] (AM-A202)

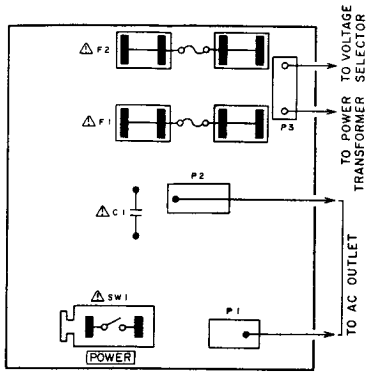

POWER SW PCB
A2047A505E [U] (AM-A202)
A513E [U] (AM-A102)

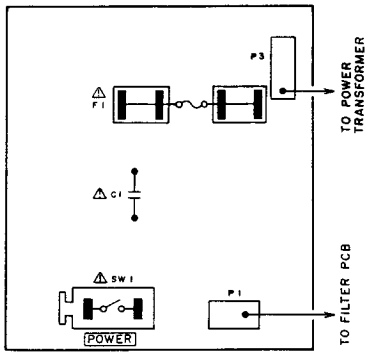

POWER SW PCB
A2047A504E [V] (AM-A202)

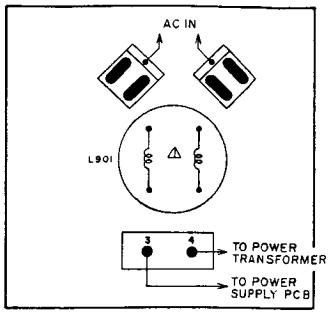

FILTER PCB A2040A504C
[V] MODEL ONLY

For Service Manuals Contact
MAURITRON TECHNICAL SERVICES
8 Cherry Tree Rd, Chinnor
Oxon OX9 4QY
Tel:- 01844-351694 Fax:- 01844-352554
Email:- enquiries@mauritron.co.uk

WARNING: ⚠ INDICATES SAFETY CRITICAL COMPONENTS FOR CONTINUED SAFETY, REPLACE SAFETY CRITICAL COMPONENTS ONLY WITH MANUFACTURER'S RECOMMENDED PARTS

AVERTISSEMENT: ⚠ IL INDIQUE LES COMPOSANTS CRITIQUES DE SÉCURITÉ. POUR MAINTENIR LE DEGRÉ DE SÉCURITÉ DE L'APPAREIL, NE REMPLACER QUE DES PIÈCES RECOMMANDEES PAR LE FABRICANT

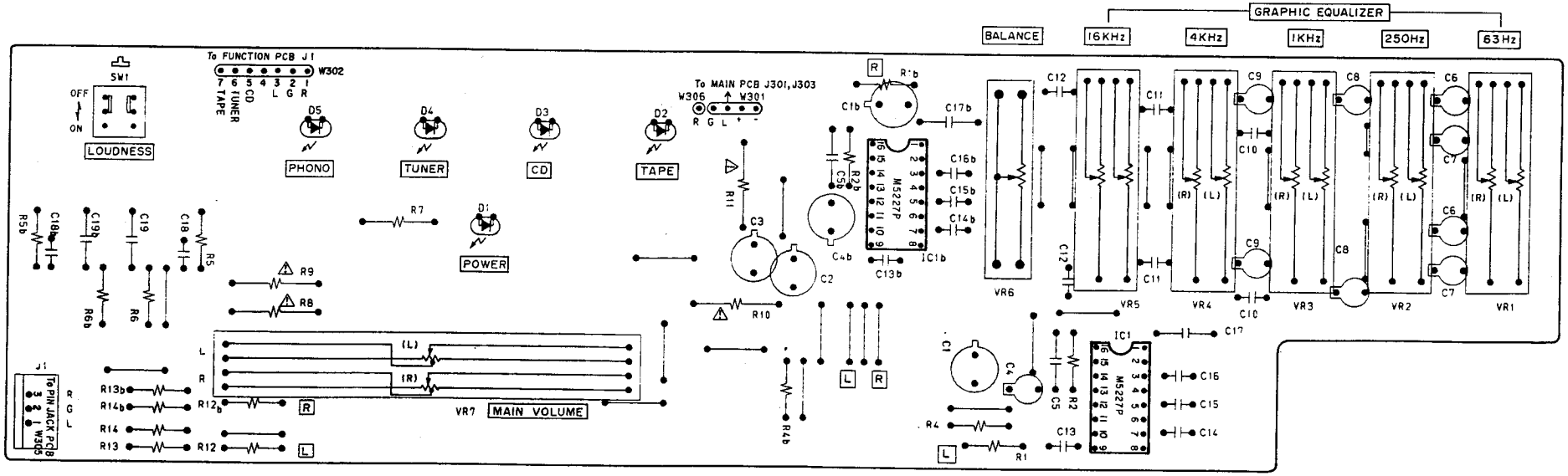

CONTROL PCB AM-A102 [A2047A513A [U]
A507A [E][S]

AM-A202 [A2047A505A [U]
A506A [C][A]
A507A [E][B][S]
A508A [V]

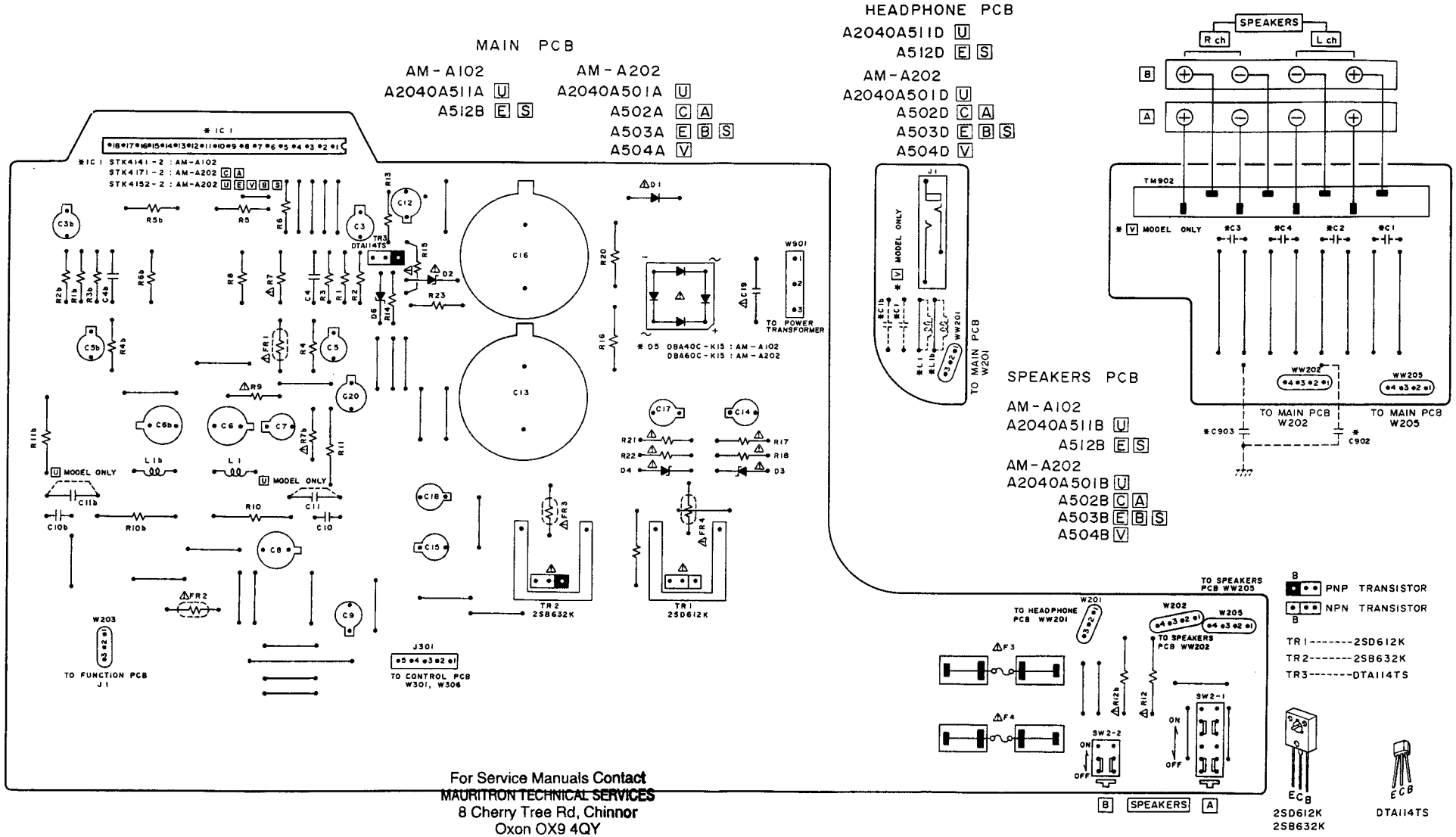

For Service Manuals Contact
MAURITRON TECHNICAL SERVICES
8 Cherry Tree Rd, Chinnor
Oxon OX9 4QY
Tel:- 01844-351694 Fax:- 01844-352554
Email:- enquiries@mauritron.co.uk

WARNING: ⚠ INDICATES SAFETY CRITICAL COMPONENTS FOR CONTINUED SAFETY, REPLACE SAFETY CRITICAL COMPONENTS ONLY WITH MANUFACTURER'S RECOMMENDED PARTS

AVERTISSEMENT: ⚠ IL INDIQUE LES COMPOSANTS CRITIQUES DE SÉCURITÉ. POUR MAINTENIR LE DEGRÉ DE SÉCURITÉ DE L'APPAREIL, NE REMPLACER QUE DES PIÈCES RECOMMANDEES PAR LE FABRICANT

For Service Manuals Contact
MAURITRON TECHNICAL SERVICES
8 Cherry Tree Rd, Chinnor
Oxon OX9 4QY
Tel:- 01844-351694 Fax:- 01844-352554
Email:- enquiries@mauritron.co.uk

AM-A102/202

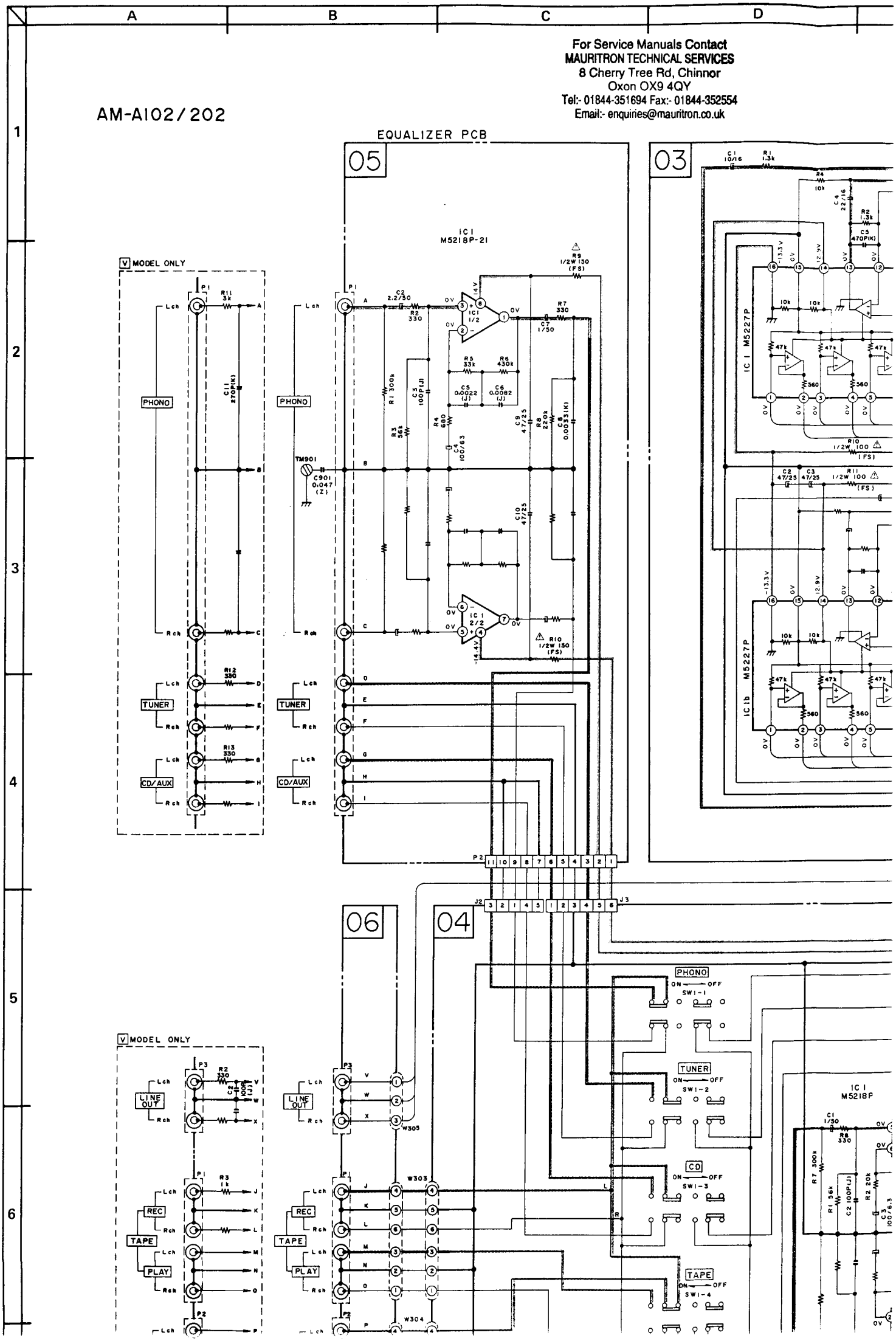

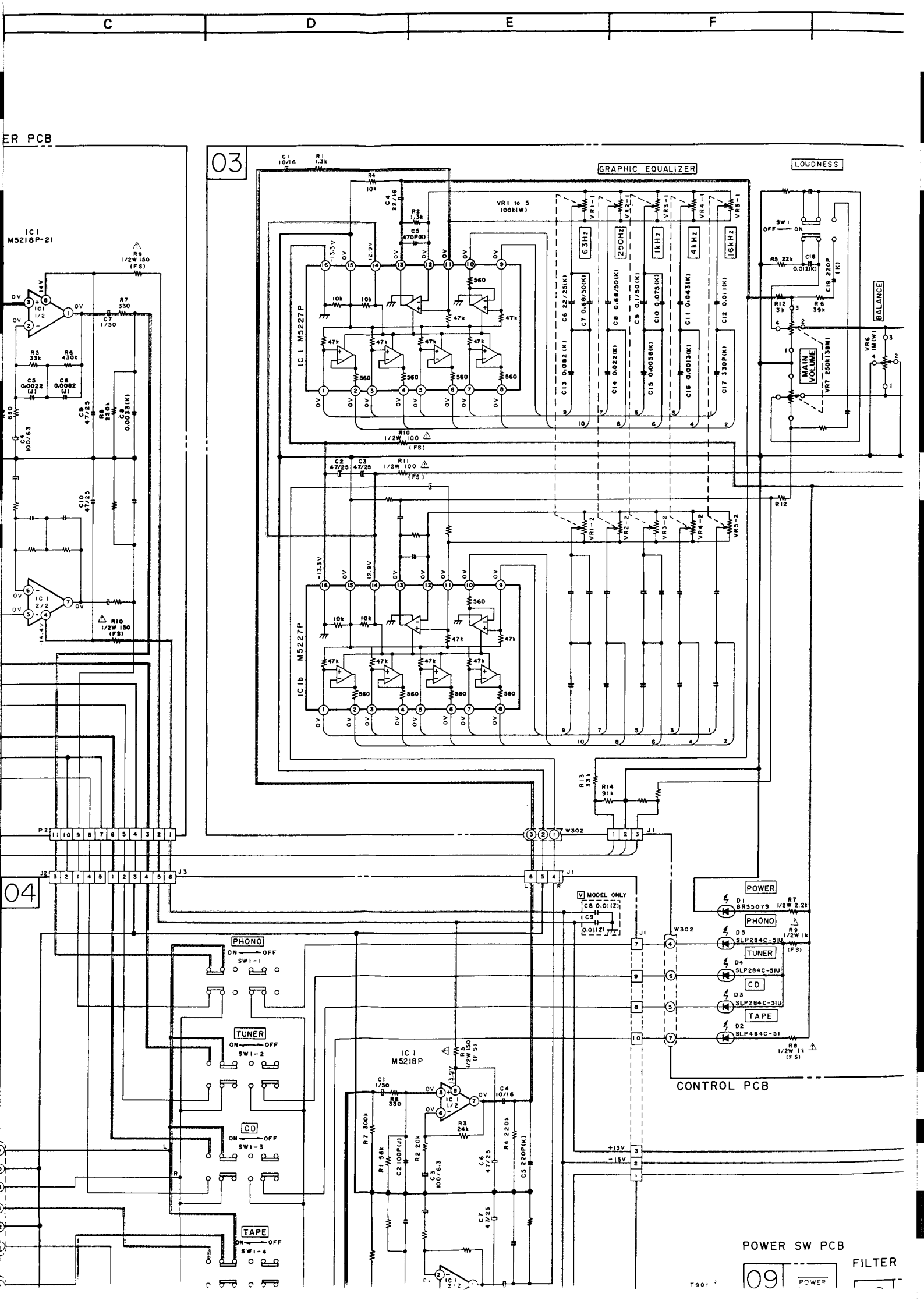
C
D
E
F
ER PCB
03
04
09
GRAPHIC EQUALIZER
LOUDNESS
BALANCE
MAIN VOLUME
IC 1 M5227P
IC 1b M5227P
IC 1 M5218P-21
IC 1 M5218P
VR1 to 5 100k(W)
63Hz
250Hz
1kHz
4kHz
16kHz
POWER
PHONO
TUNER
CD
TAPE
V MODEL ONLY
CONTROL PCB
POWER SW PCB
FILTER
W302
J1
J2
J3
P2
T901

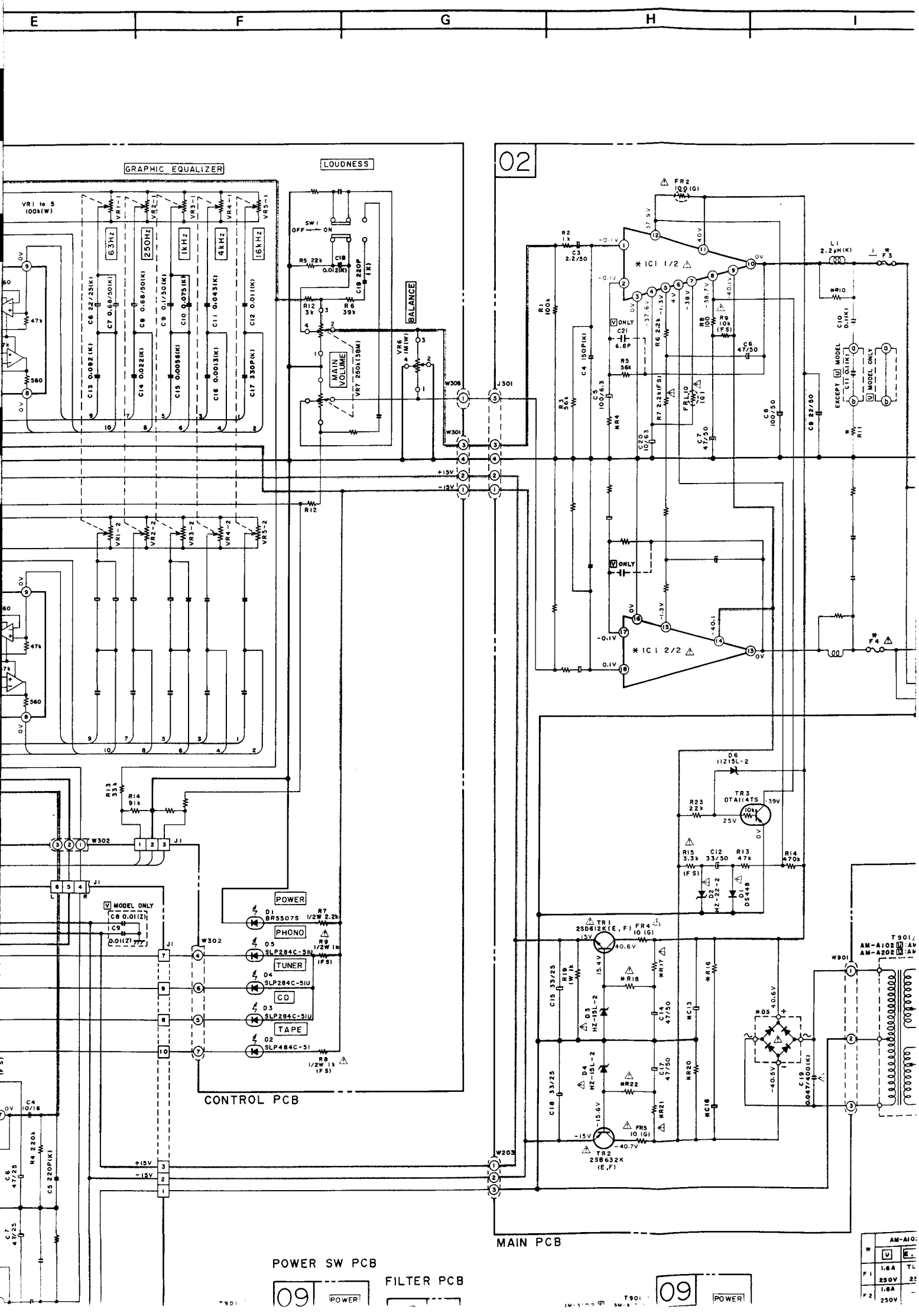
E
F
G
H
I
GRAPHIC EQUALIZER
LOUDNESS
BALANCE
MAIN VOLUME
02
63Hz
250Hz
1kHz
4kHz
16kHz
POWER
PHONO
TUNER
CD
TAPE
CONTROL PCB
MAIN PCB
POWER SW PCB
FILTER PCB
09
POWER

For Service Manuals Contact
MAURITRON TECHNICAL SERVICES
8 Cherry Tree Rd, Chinnor
Oxon OX9 4QY
Tel:- 01844-351694 Fax:- 01844-352554
Email:- enquiries@mauritron.co.uk

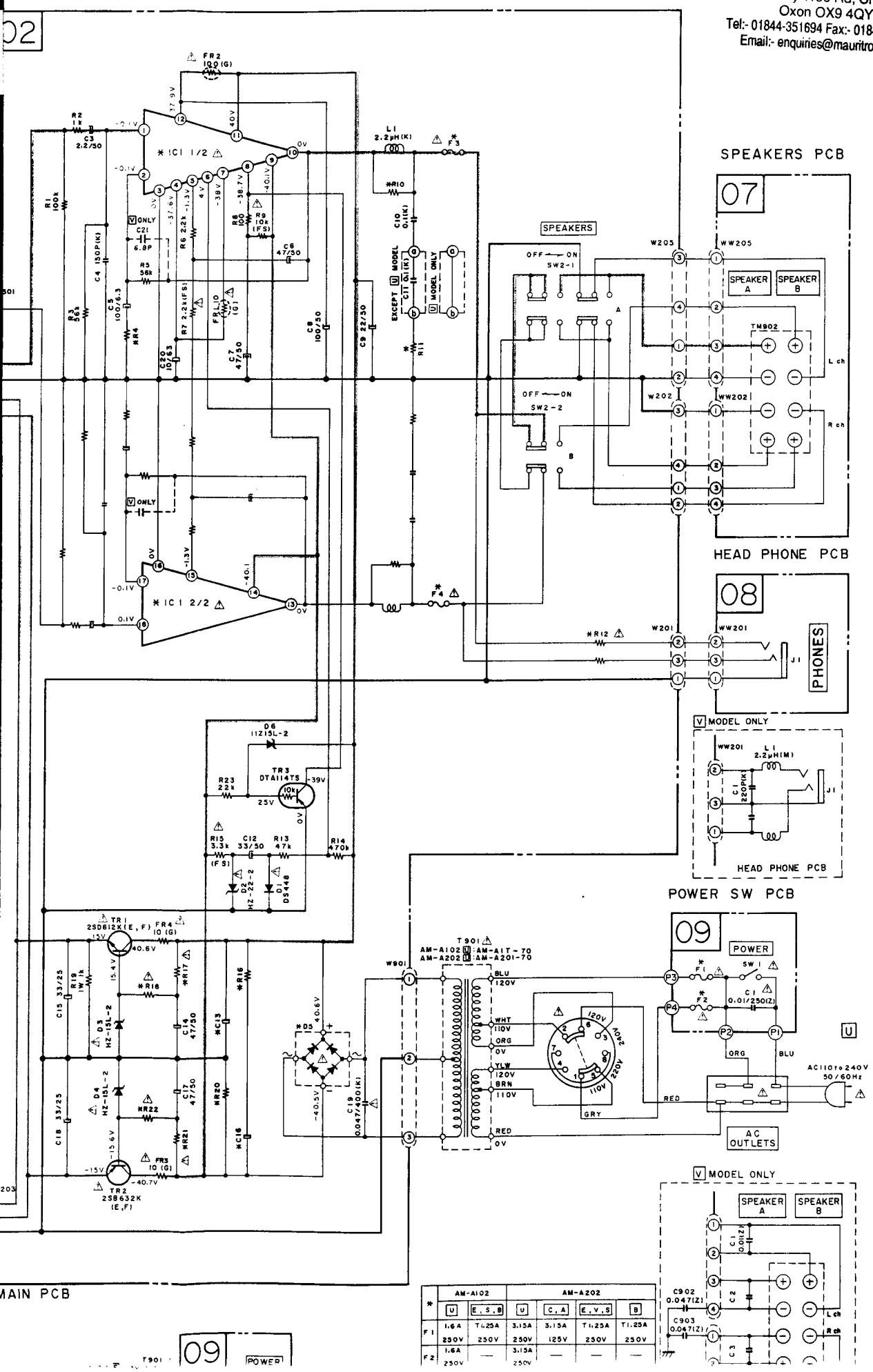

*	AM-A102		AM-A202			
	U	E,S,B	U	C,A	E,V,S	B
F1	1.6A 250V	T1.25A 250V	3.15A 250V	3.15A 125V	T1.25A 250V	T1.25A 250V
F2	1.6A 250V	—	3.15A 250V	—	—	—

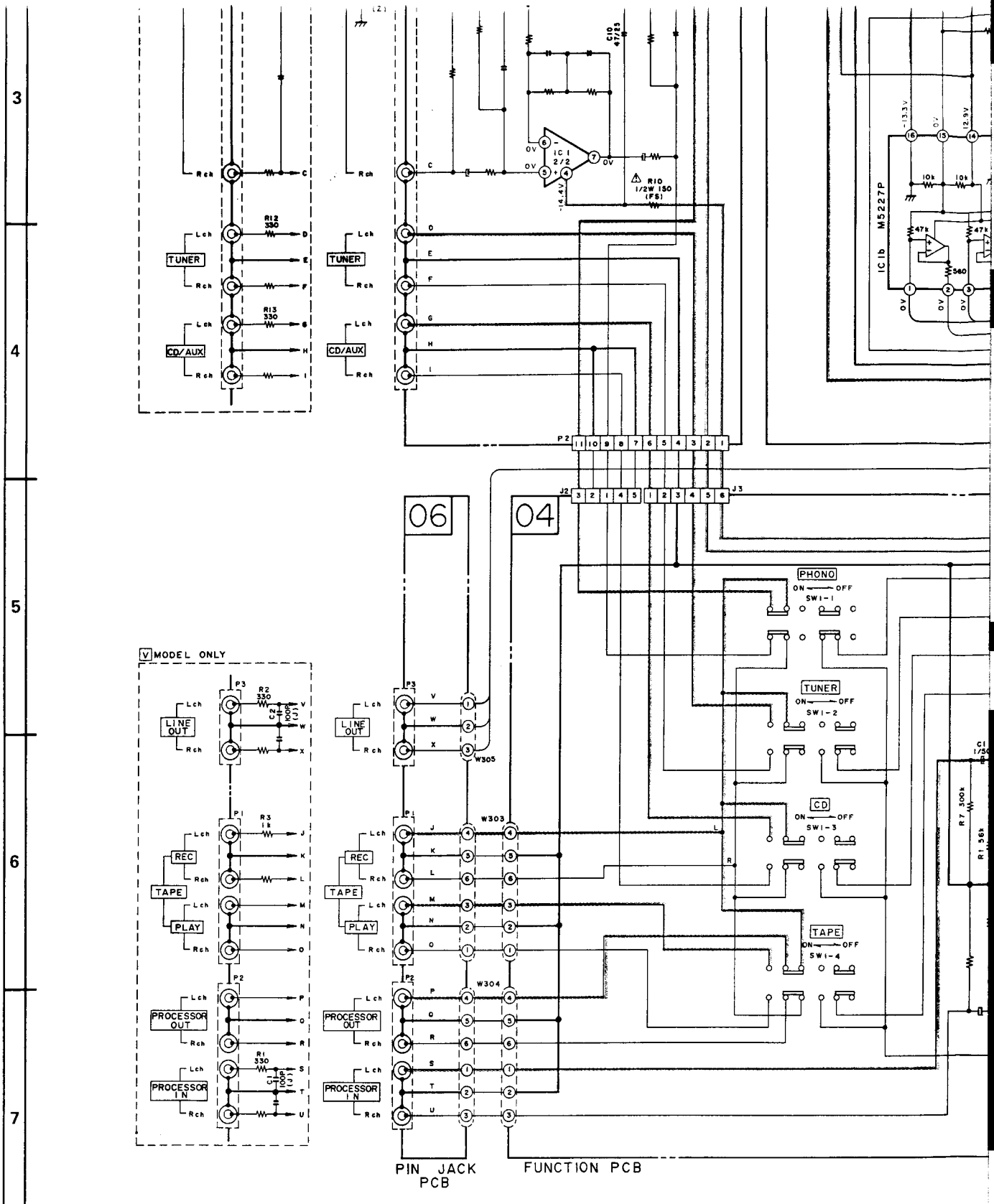

*	AM-A102	AM-A
R4	1.1 k	C A U E V B S
R10, R11	1/2 W10	1W
R12	1 W180	2W2
R17, R21	3.3k (FS)	U E V B S C A
R18, R22	1 k (FS)	U E V B S C A

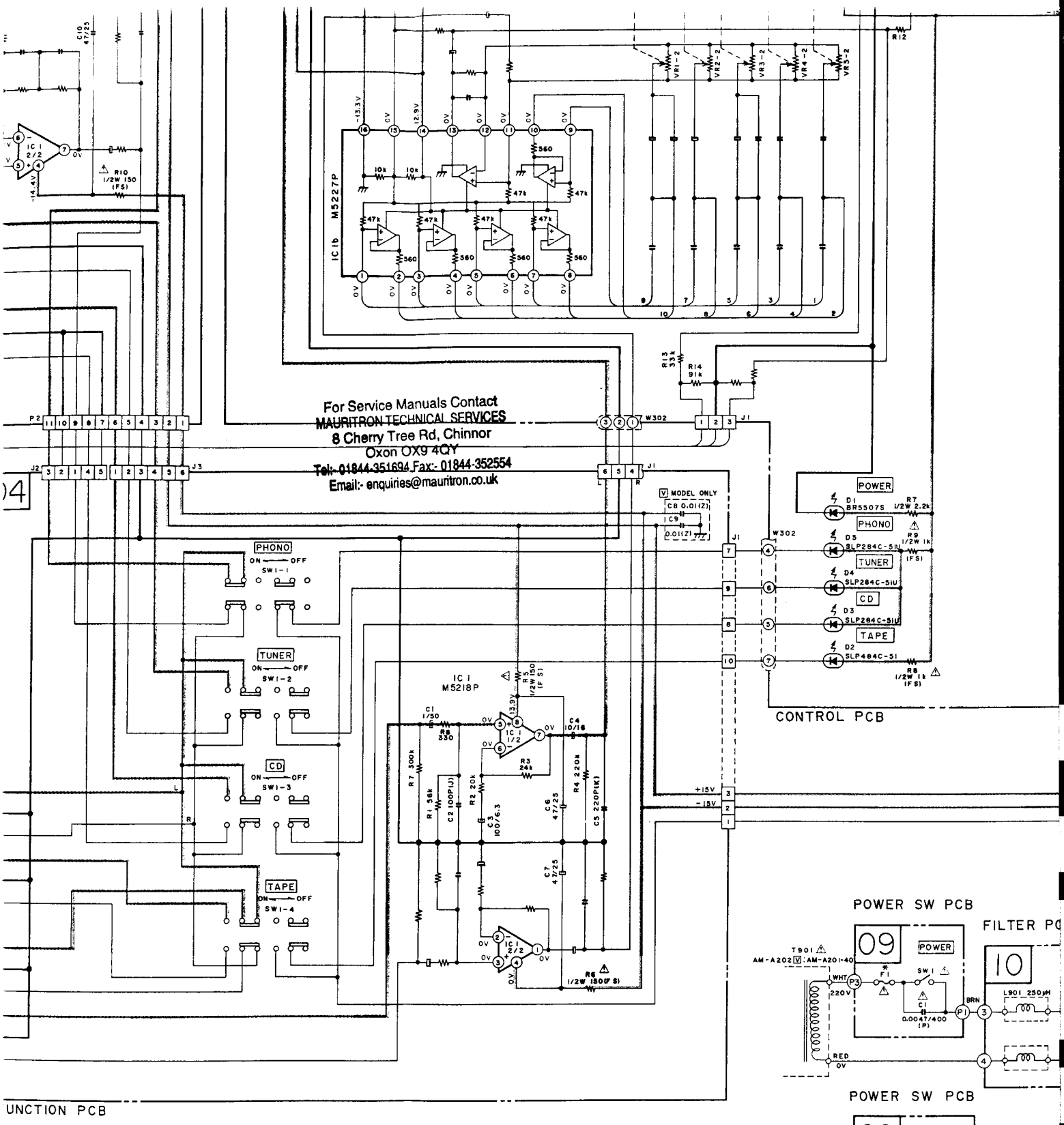

For Service Manuals Contact
MAURITRON TECHNICAL SERVICES
8 Cherry Tree Rd, Chinnor
Oxon OX9 4QY
Tel:- 01844-351694 Fax:- 01844-352554
Email:- enquiries@mauritron.co.uk

*	AM-A102	AM-A202
R4	1.1k	CA 750 UEVBS 820
R10, R11	1/2W10	1W10
R12	1W180	2W220
R17, R21	3.3k (FS)	UEVBS 3.3k (FS) CA 5.6k (FS)
R18, R22	1k (FS)	UEVBS 1k (FS) CA 1.8k (FS)

*	AM-A102	AM-A202
R16, R20	5.6k	10k
C13, C16	4700/40	UEVBS 4700/45 CA 4700/50
D5	DBA40C-K15	DBA60C-K15
IC1	STK4141-2	CA STK4171-2 UEVBS STK4152-2

B (POWER SUPPLY) LINE

SIGNAL LINE

C D E F G

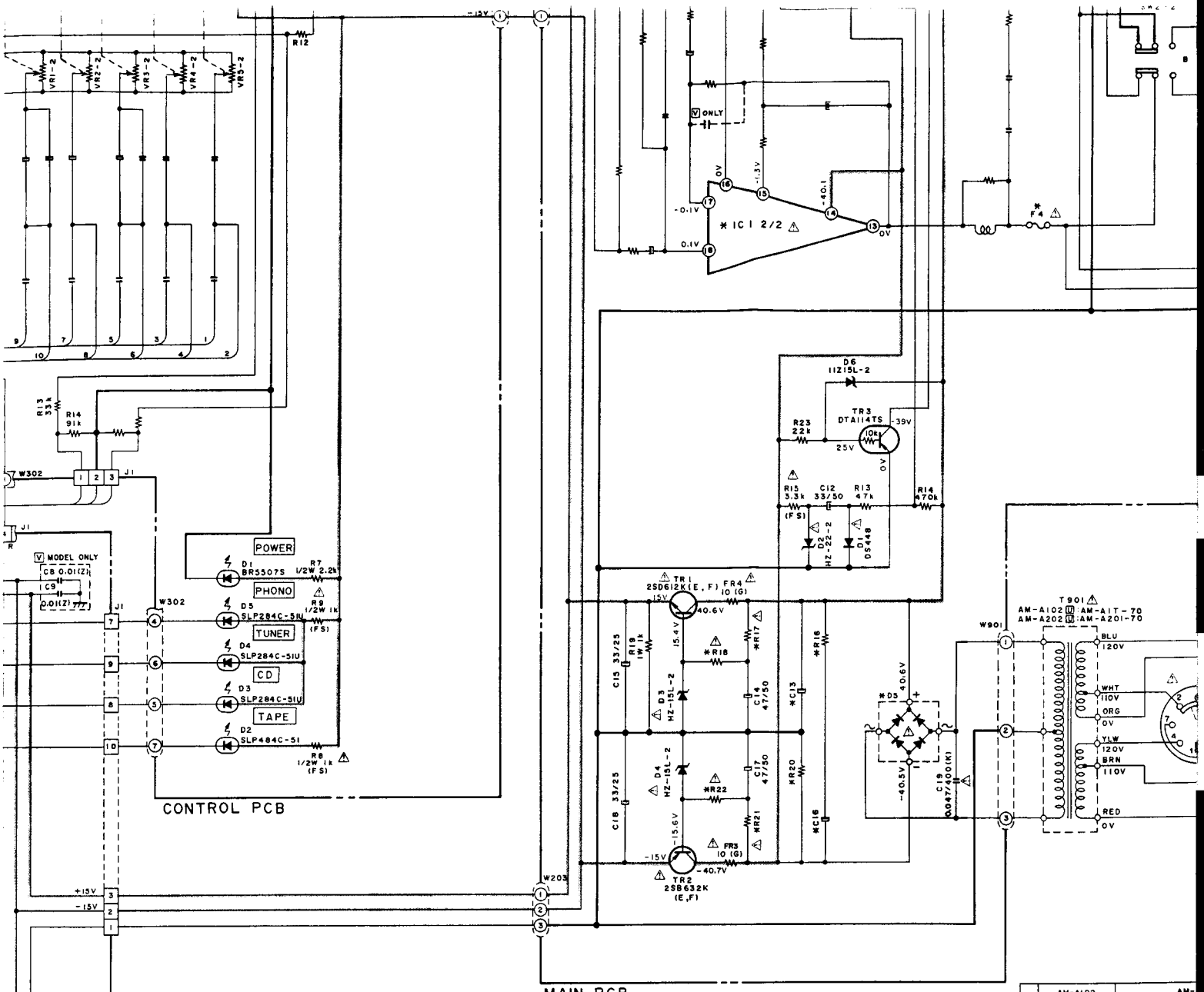

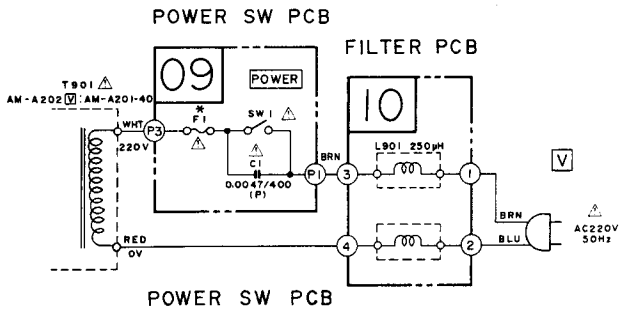

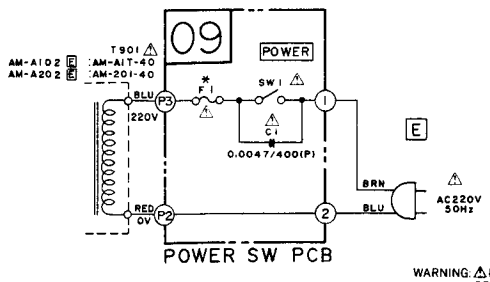

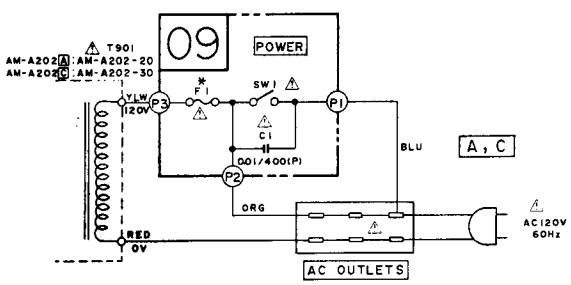

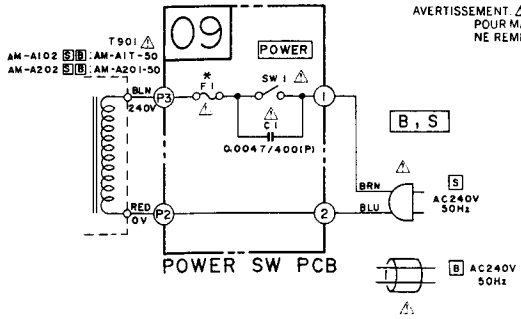

*	AM-A102		AM-	
	U	E, S, B	U	C, A
F1	1.6A 250V	T4.25A 250V	3.15A 250V	3.15A 125V
F2	1.6A 250V	—	3.15A 250V	—
F3	3.15A 250V	T2.5A 250V	4A 250V	4A 125V
F4	3.15A 250V	T2.5A 250V	4A 250V	4A 125V

* INDICATED VOLTAGES ARE M

WARNING: ⚠ INDICATES SAFETY CRITICAL COMPONENTS
REPLACE SAFETY CRITICAL COMPONENTS ONL
RECOMMENDED PARTS

AVERTISSEMENT. ⚠ IL INDIQUE LES COMPOSANTS CRITIQ
POUR MAINTENIR LE DEGRÉ DE SÉCURITÉ DE L
NE REMPLACER QUE DES PIÈCES RECOMMAND

AM-A202
10k
V B S 4700/45
4700/50
DBA60C-K15
STK4171-2
V B S STK4152-2

F G H I

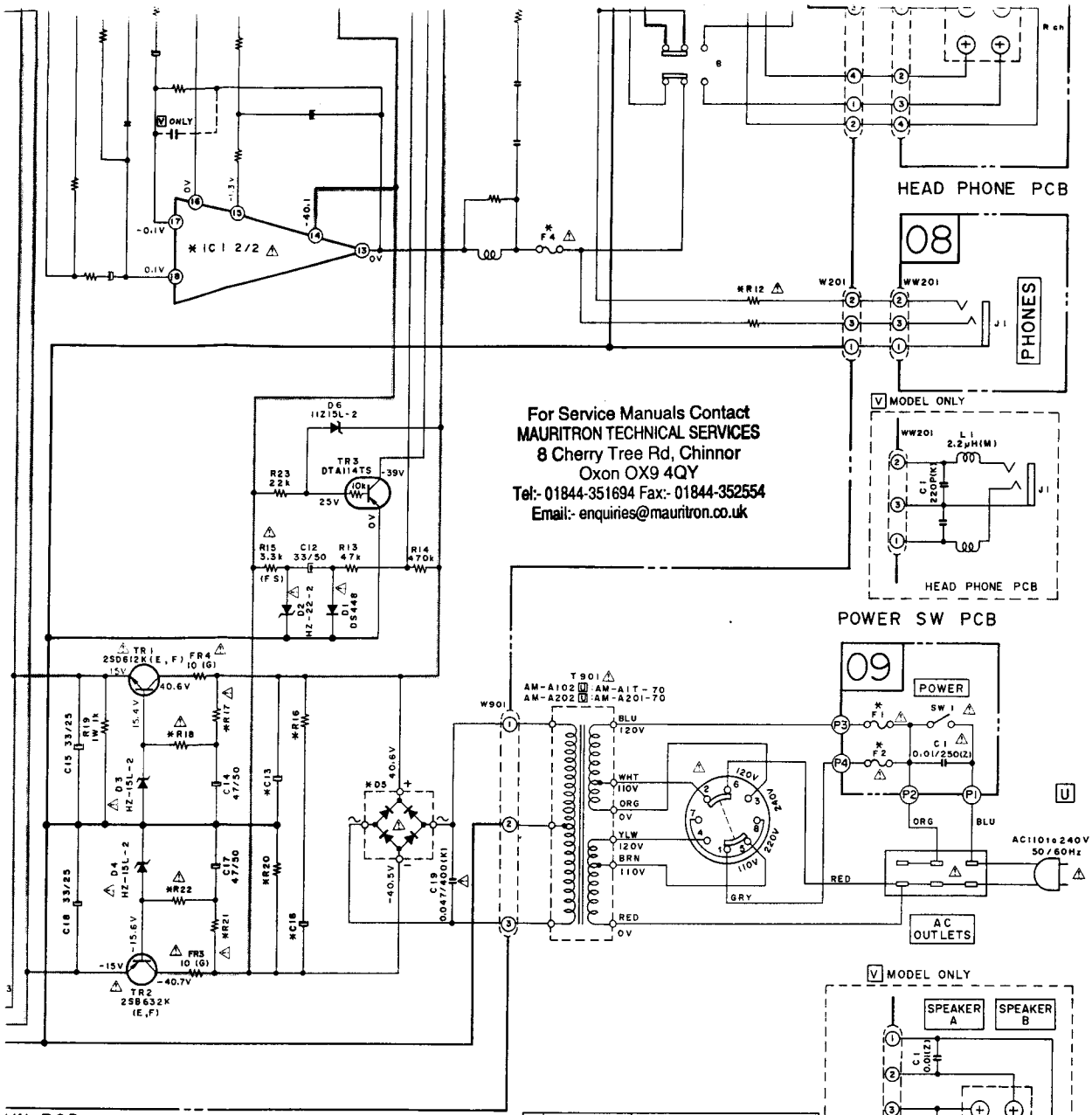

For Service Manuals Contact
MAURITRON TECHNICAL SERVICES
8 Cherry Tree Rd, Chinnor
Oxon OX9 4QY
Tel:- 01844-351694 Fax:- 01844-352554
Email:- enquiries@mauritron.co.uk

*	AM-A102		AM-A202			
	U	E, S, B	U	C, A	E, V, S	B
F1	1.6A 250V	T1.25A 250V	3.15A 250V	3.15A 125V	T1.25A 250V	T1.25A 250V
F2	1.6A 250V	—	3.15A 250V	—	—	—
F3	3.15A 250V	T2.5A 250V	4 A 250V	4 A 125V	T3.15A 250V	T3.15A 250V
F4	3.15A 250V	T2.5A 250V	4 A 250V	4 A 125V	T3.15A 250V	T3.15A 250V

* INDICATED VOLTAGES ARE MEASURED AT CD AND NO INPUT

WARNING: ⚠ INDICATES SAFETY CRITICAL COMPONENTS. FOR CONTINUED SAFETY, REPLACE SAFETY CRITICAL COMPONENTS ONLY WITH MANUFACTURER'S RECOMMENDED PARTS.

AVERTISSEMENT ⚠ IL INDIQUE LES COMPOSANTS CRITIQUES DE SECURITÉ. POUR MAINTENIR LE DEGRÉ DE SÉCURITÉ DE L'APPAREIL, NE REMPLACER QUE DES PIÈCES RECOMMANDÉES PAR LE FABRICANT

NOTE
UNLESS OTHERWISE SPECIFIED
ALL RESISTORS IN OHMS 1/4W(J)
ALL CAPACITORS IN μF 50WV(J)
POWER TRANSFORMER IS DIFFERENT ACCORDING TO AREA

AM-A102/202 SCHEMATIC DIAGRAM

NO. 860612A

AM-A302/402

EQUALIZER PCB A2048A506C

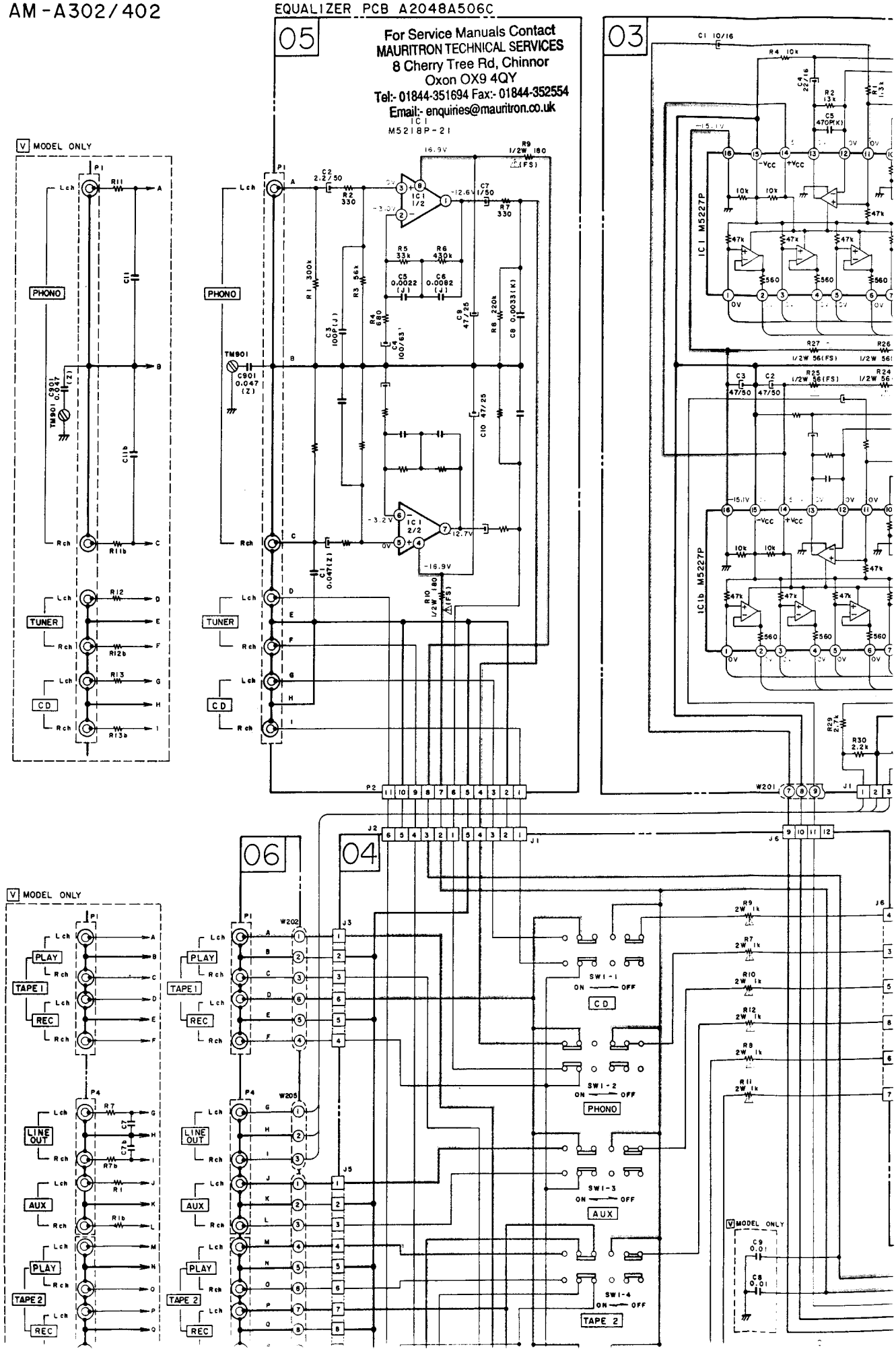

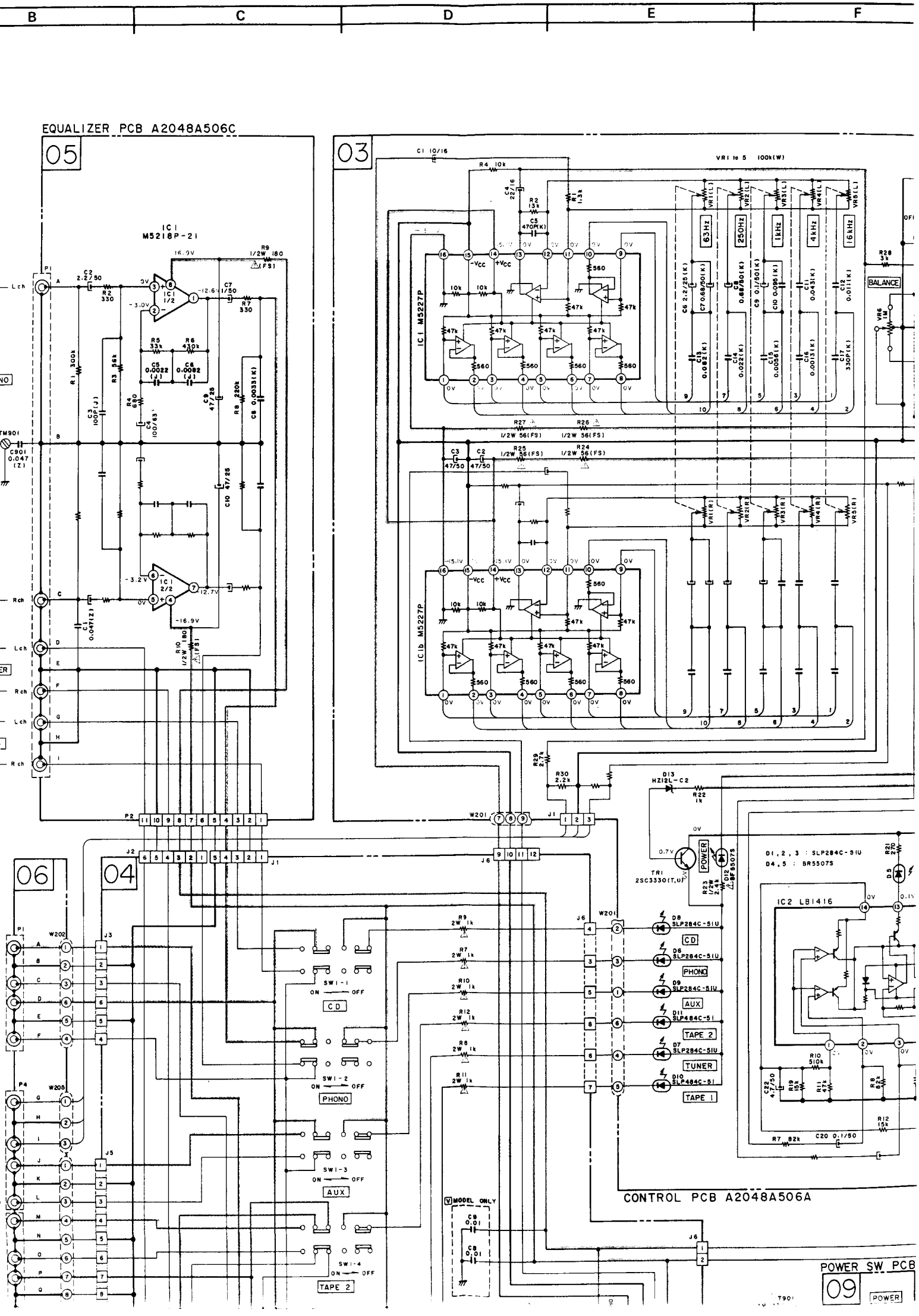
B
C
D
E
F
EQUALIZER PCB A2048A506C
05
IC1 M5218P-21
IC1 M5227P
IC1b M5227P
03
VR1 to 5 100k(W)
63Hz
250Hz
1kHz
4kHz
16kHz
BALANCE
06
04
SW1-1
CD
SW1-2
PHONO
SW1-3
AUX
SW1-4
TAPE 2
MODEL ONLY
CONTROL PCB A2048A506A
IC2 LB1416
POWER
TAPE 1
TUNER
POWER SW PCB
09

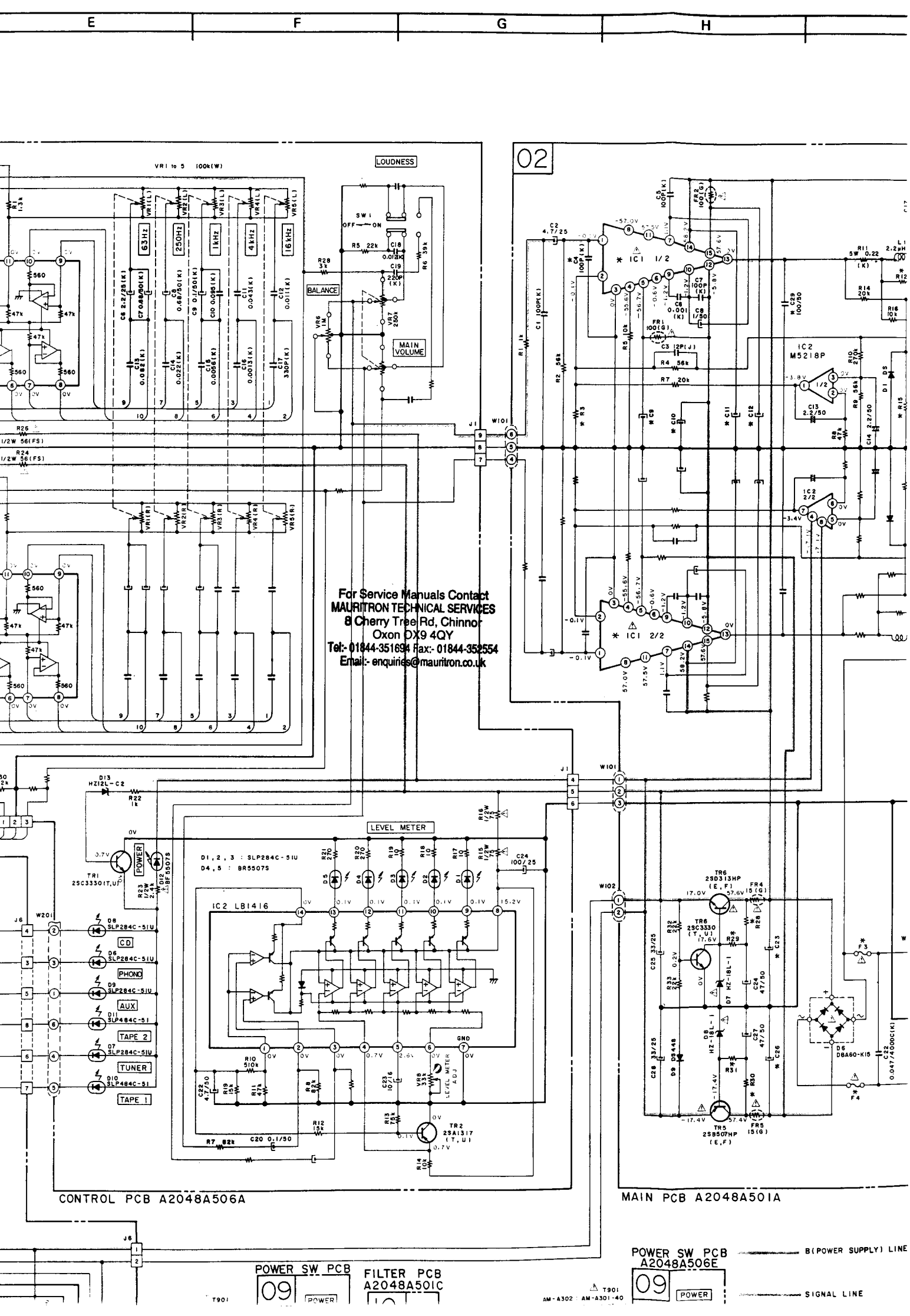
E
F
G
H
02
LOUDNESS
BALANCE
MAIN VOLUME
LEVEL METER
IC1 1/2
IC1 2/2
IC2 M5218P
IC2 LB1416
TR1 2SC3330(T,U)
TR2 2SA1317 (T,U)
TR6 2SD313HP (E,F)
TR6 2SC3330 (T,U)
TR5 2SB507HP (E,F)
D1,2,3 : SLP284C-51U
D4,5 : BR5507S
CD
PHONO
AUX
TAPE 2
TUNER
TAPE 1
POWER
CONTROL PCB A2048A506A
MAIN PCB A2048A501A
POWER SW PCB
FILTER PCB A2048A501C
POWER SW PCB A2048A506E
B(POWER SUPPLY) LINE
SIGNAL LINE
For Service Manuals Contact
MAURITRON TECHNICAL SERVICES
8 Cherry Tree Rd, Chinnor
Oxon OX9 4QY
Tel:- 01844-351694 Fax:- 01844-352554
Email:- enquiries@mauritron.co.uk

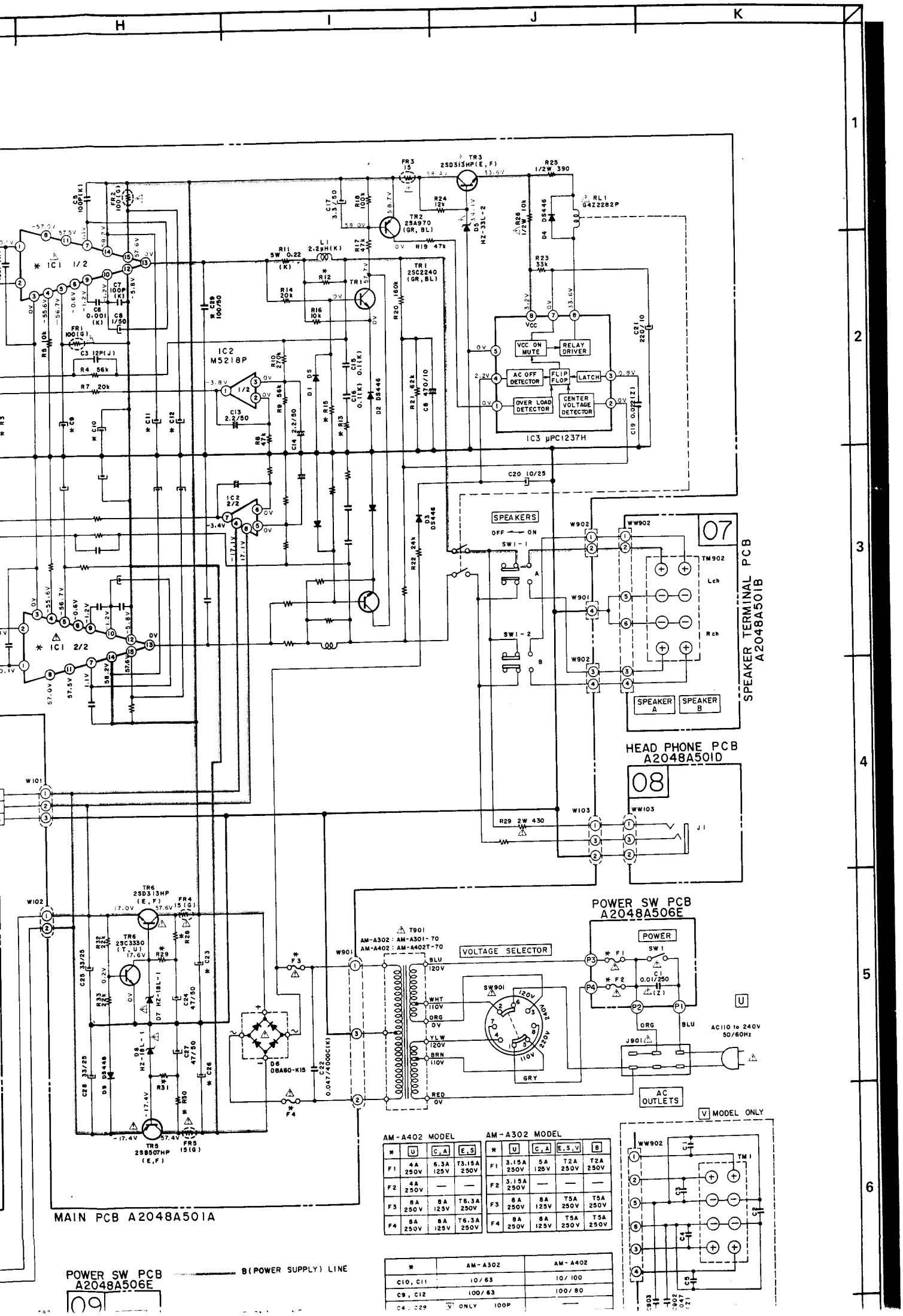

AM-A402 MODEL

*	U	C, A	E, S
F1	4A 250V	6.3A 125V	T3.15A 250V
F2	4A 250V	—	—
F3	8A 250V	8A 125V	T6.3A 250V
F4	8A 250V	8A 125V	T6.3A 250V

AM-A302 MODEL

*	U	C, A	E, S, V	B
F1	3.15A 250V	5A 125V	T2A 250V	T2A 250V
F2	3.15A 250V	—	—	—
F3	8A 250V	8A 125V	T5A 250V	T5A 250V
F4	8A 250V	8A 125V	T5A 250V	T5A 250V

*	AM-A302	AM-A402
C10, C11	10/63	10/100
C9, C12	100/63	100/80
C4, C29	V ONLY 100P	—

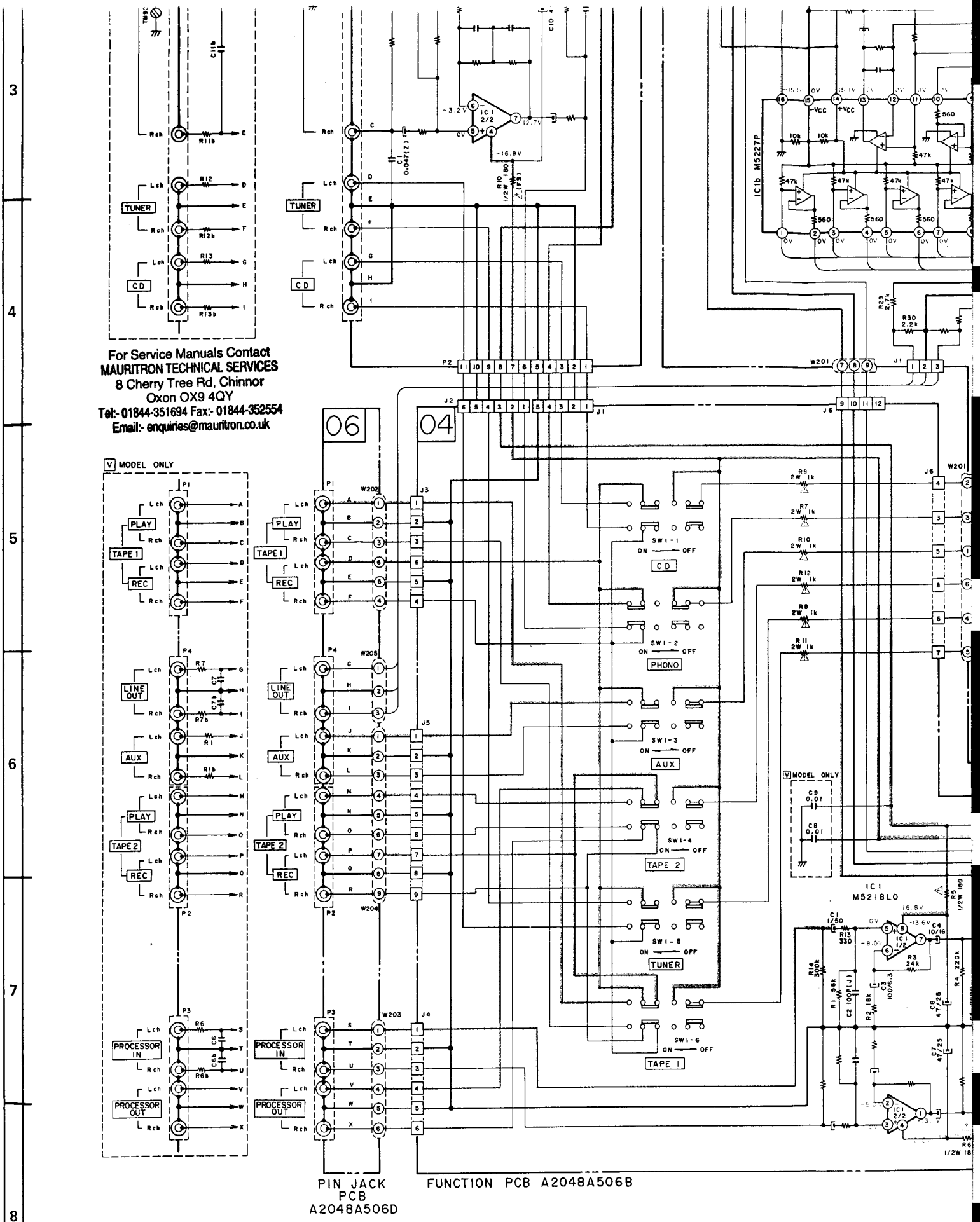
For Service Manuals Contact
MAURITRON TECHNICAL SERVICES
8 Cherry Tree Rd, Chinnor
Oxon OX9 4QY
Tel:- 01844-351694 Fax:- 01844-352554
Email:- enquiries@mauritron.co.uk
06
04
V MODEL ONLY
TUNER
CD
PLAY
TAPE 1
REC
LINE OUT
AUX
TAPE 2
PROCESSOR IN
PROCESSOR OUT
PHONO
IC1b M5227P
IC1 2/2
IC1 M5218LO
IC1 1/2
SW1-1
SW1-2
SW1-3
SW1-4
SW1-5
SW1-6
ON
OFF
PIN JACK PCB A2048A506D
FUNCTION PCB A2048A506B
001876

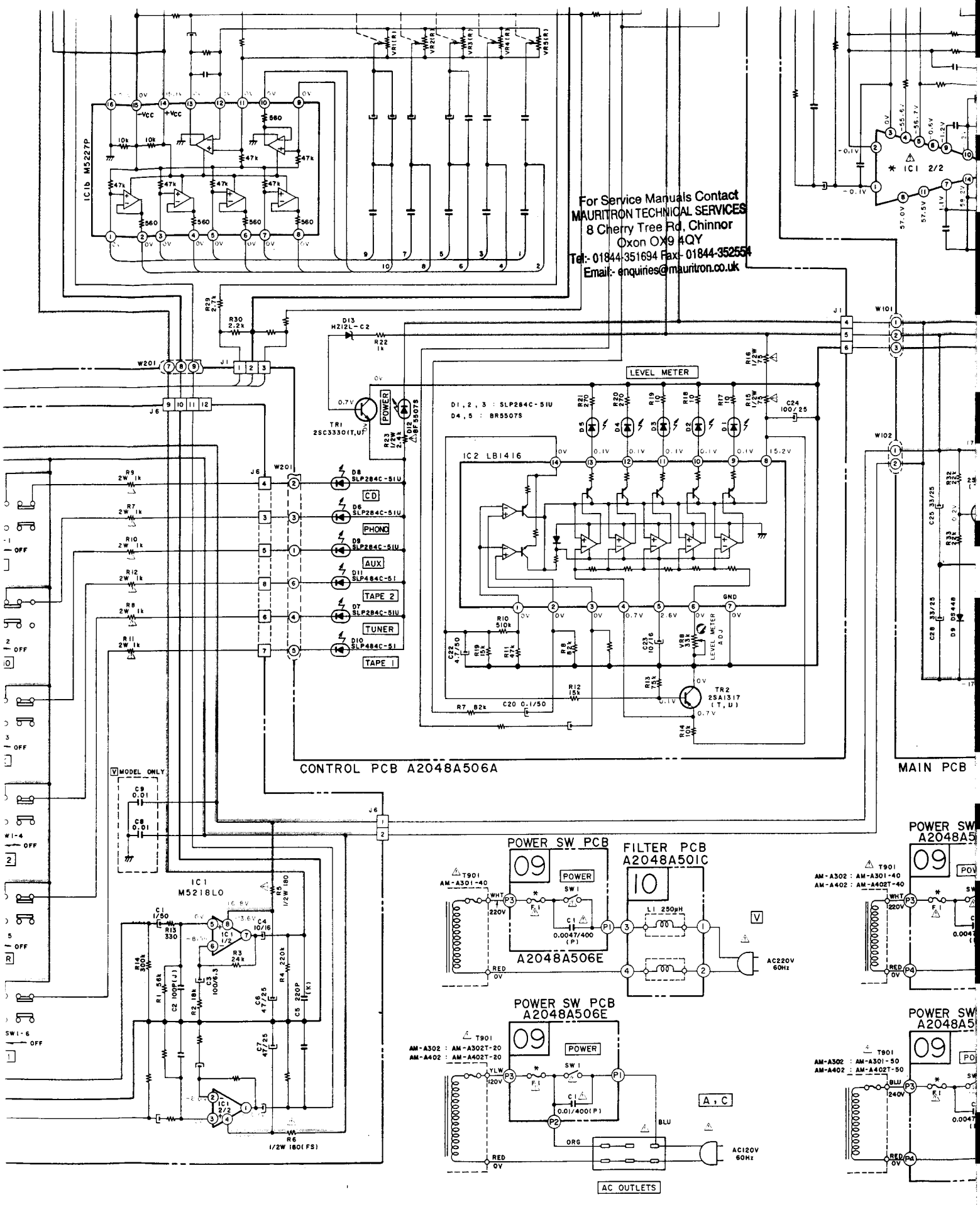
For Service Manuals Contact
MAURITRON TECHNICAL SERVICES
8 Cherry Tree Rd, Chinnor
Oxon OX9 4QY
Tel:- 01844-351694 Fax- 01844-352554
Email:- enquiries@mauritron.co.uk
IC1b M5227P
IC1 2/2
LEVEL METER
D1, 2, 3 : SLP284C-51U
D4, 5 : BR5507S
IC2 LB1416
TR1 2SC3330(T,U)
TR2 2SA1317 (T, U)
POWER
CD
PHONO
AUX
TAPE 2
TUNER
TAPE 1
CONTROL PCB A2048A506A
MAIN PCB
V MODEL ONLY
IC1 M5218LO
POWER SW PCB
A2048A506E
FILTER PCB
A2048A501C
POWER SW PCB
A2048A506E
AC OUTLETS
AC220V 60Hz
AC120V 60Hz
A, C
V

D | E | F | G

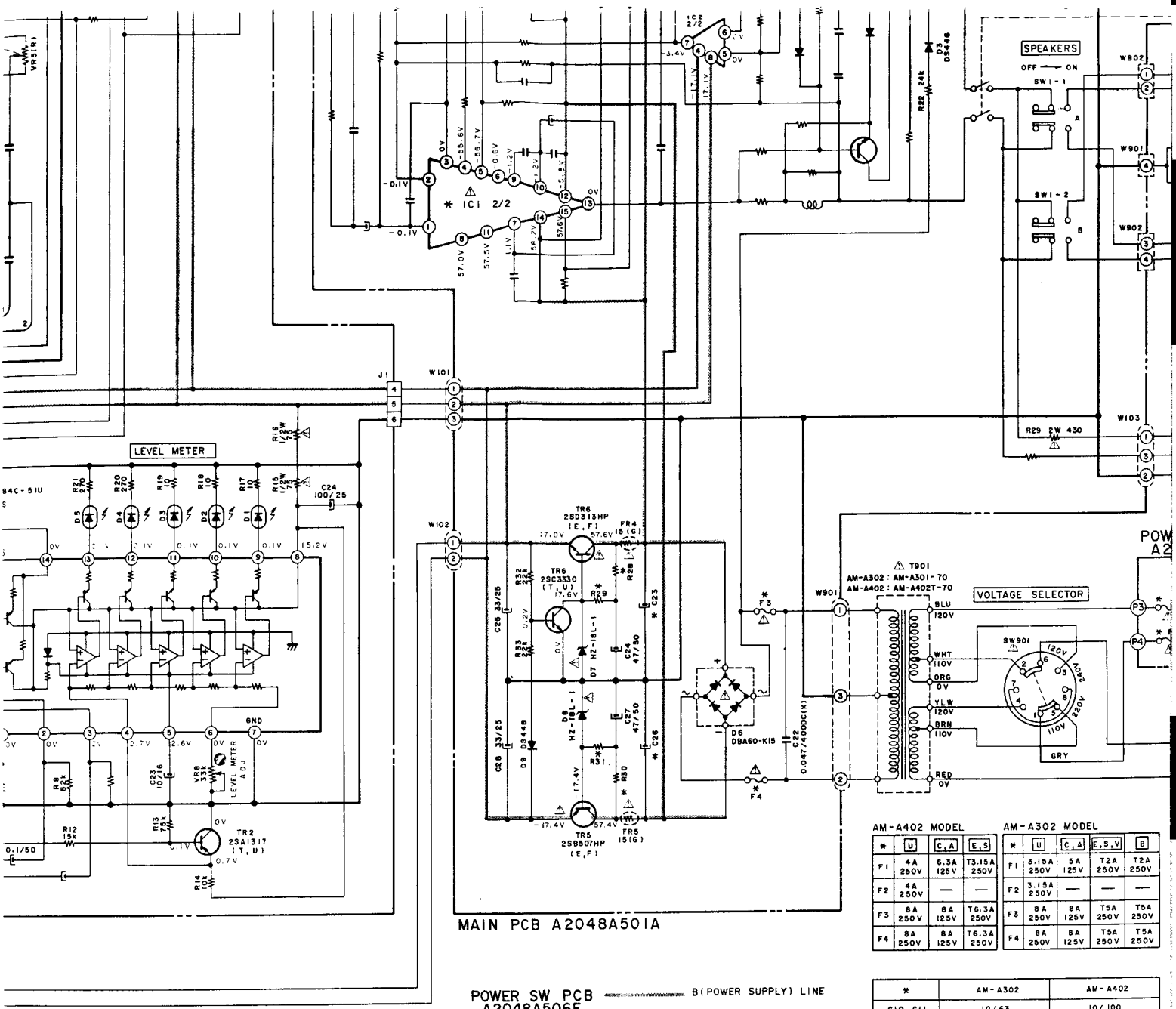

AM-A402 MODEL			
*	U	C, A	E, S
F1	4A 250V	6.3A 125V	T3.15A 250V
F2	4A 250V	—	—
F3	8A 250V	8A 125V	T6.3A 250V
F4	8A 250V	8A 125V	T6.3A 250V

AM-A302 MODEL				
*	U	C, A	E, S, V	B
F1	3.15A 250V	5A 125V	T2A 250V	T2A 250V
F2	3.15A 250V	—	—	—
F3	8A 250V	8A 125V	T5A 250V	T5A 250V
F4	8A 250V	8A 125V	T5A 250V	T5A 250V

*	AM-A302	AM-A402
C10, C11	10/63	10/100
C9, C12	100/63	100/80
C4, C29	V ONLY 100P	—
C23, C26	6800/55	6800/71
R3	U E V 750 A C 680	620
R12, R13	1W 10	2W 10
R15	750k	620k
R28, R30	6.2k	8.2k
R29, R31	2.7k	3k
IC1	U E V B S STK4038-2 A C STK4042-2	STK4044-2

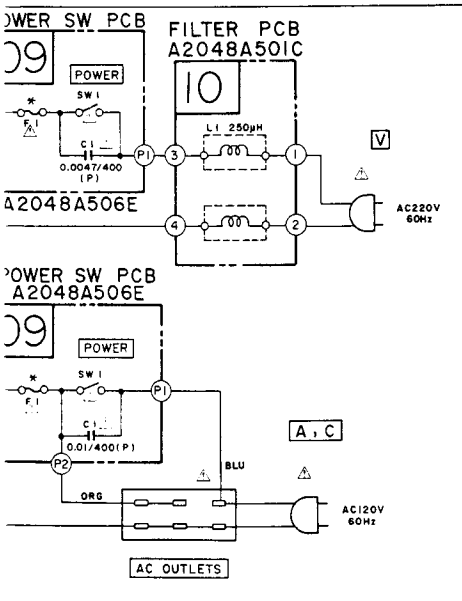

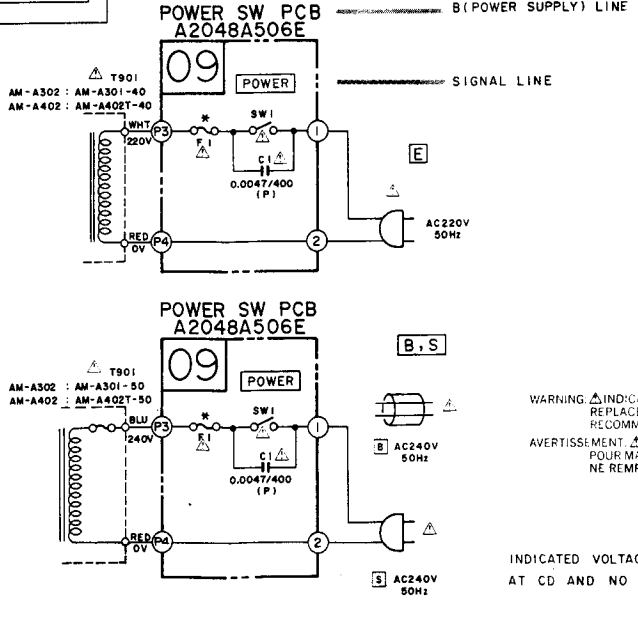

WARNING: ⚠ INDICATES SAFETY CRITICAL COMPONENTS. FOR CONTINUED SAFETY, REPLACE SAFETY CRITICAL COMPONENTS ONLY WITH MANUFACTURER'S RECOMMENDED PARTS.

AVERTISSEMENT: ⚠ IL INDIQUE LES COMPOSANTS CRITIQUES DE SECURITÉ. POUR MAINTENIR LE DEGRÉ DE SÉCURITÉ DE L'APPAREIL, NE REMPLACER QUE DES PIÈCES RECOMMANDÉES PAR LE FABRICANT.

NOTE

INDICATED VOLTAGES ARE MEASURED AT CD AND NO INPUT.

AM-A302 SCHEMATIC

NO.

F | G | H | I | J

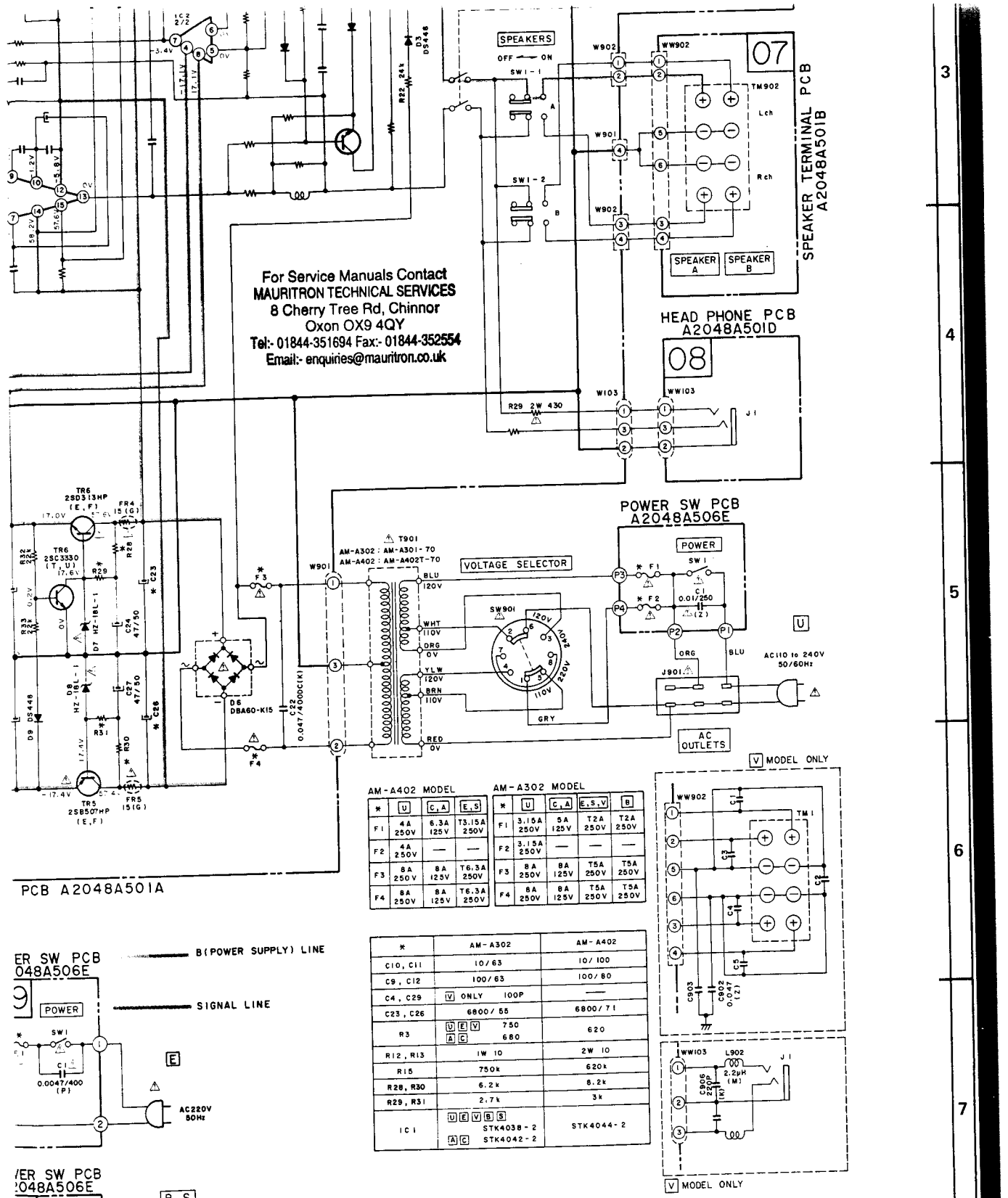

AM-A402 MODEL			
*	U	C,A	E,S
F1	4A 250V	6.3A 125V	T3.15A 250V
F2	4A 250V	—	—
F3	8A 250V	8A 125V	T6.3A 250V
F4	8A 250V	8A 125V	T6.3A 250V

AM-A302 MODEL				
*	U	C,A	E,S,V	B
F1	3.15A 250V	5A 125V	T2A 250V	T2A 250V
F2	3.15A 250V	—	—	—
F3	8A 250V	8A 125V	T5A 250V	T5A 250V
F4	8A 250V	8A 125V	T5A 250V	T5A 250V

*	AM-A302	AM-A402
C10, C11	10/63	10/100
C9, C12	100/63	100/80
C4, C29	V ONLY 100P	—
C23, C26	6800/55	6800/71
R3	U E V 750 A C 680	620
R12, R13	1W 10	2W 10
R15	750k	620k
R28, R30	6.2k	8.2k
R29, R31	2.7k	3k
IC1	U E V B S STK4038-2 A C STK4042-2	STK4044-2

WARNING: ⚠ INDICATES SAFETY CRITICAL COMPONENTS. FOR CONTINUED SAFETY REPLACE SAFETY CRITICAL COMPONENTS ONLY WITH MANUFACTURER'S RECOMMENDED PARTS.

AVERTISSEMENT: ⚠ IL INDIQUE LES COMPOSANTS CRITIQUES DE SÉCURITÉ. POUR MAINTENIR LE DEGRÉ DE SÉCURITÉ DE L'APPAREIL. NE REMPLACER QUE DES PIÈCES RECOMMANDÉES PAR LE FABRICANT

NOTE
UNLESS OTHERWISE SPECIFIED
ALL RESISTORS IN OHMS 1/4W(J)
ALL CAPACITORS IN μF 50WV(J)
POWER TRANSFORMER IS DIFFERENT ACCORDING TO AREA

INDICATED VOLTAGES ARE MEASURED AT CD AND NO INPUT.

AM-A302/402 SCHEMATIC DIAGRAM

NO. 860614A

For Service Manuals Contact
MAURITRON TECHNICAL SERVICES
8 Cherry Tree Rd, Chinnor
Oxon OX9 4QY
Tel:- 01844-351694 Fax:- 01844-352554
Email:- enquiries@mauritron.co.uk

For Service Manuals Contact
MAURITRON TECHNICAL SERVICES
8 Cherry Tree Rd, Chinnor
Oxon OX9 4QY
Tel:- 01844-351694 Fax:- 01844-352554
Email:- enquiries@mauritron.co.uk

TR1 ..... 2SC2240
TR2 ..... 2SA970
TR3, TR4 ..... 2SD313HP
TR5 ..... 2SB507HP
TR6 ..... 2SC3330

PNP TRANSISTOR
NPN TRANSISTOR

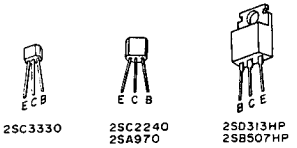

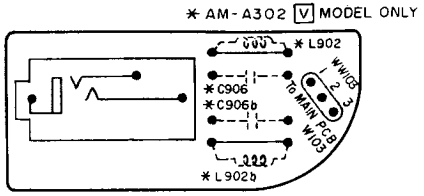

HEAD PHONE PCB A2048A501D

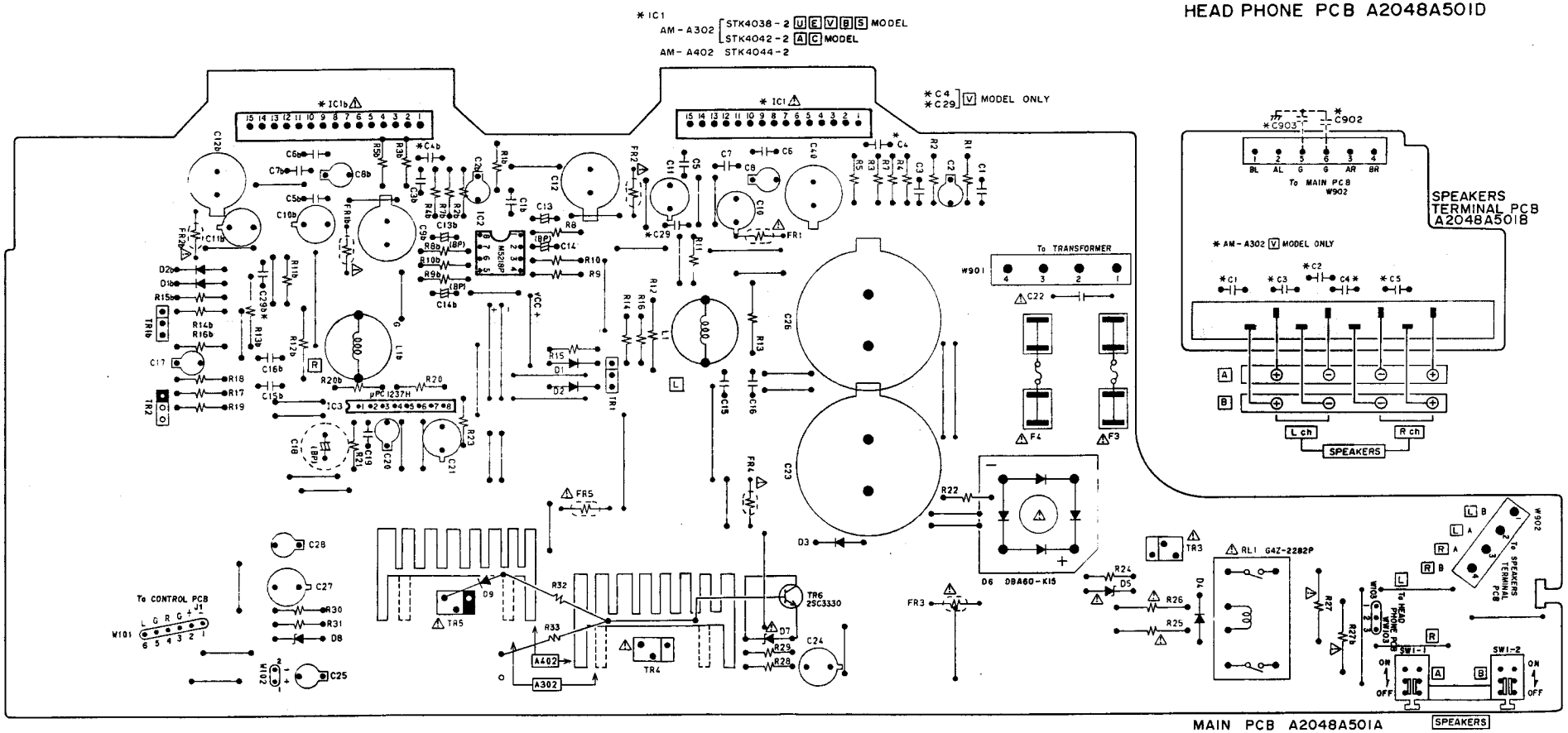

MAIN PCB A2048A501A

WARNING: ⚠ INDICATES SAFETY CRITICAL COMPONENTS FOR CONTINUED SAFETY, REPLACE SAFETY CRITICAL COMPONENTS ONLY WITH MANUFACTURER'S RECOMMENDED PARTS

AVERTISSEMENT: ⚠ IL INDIQUE LES COMPOSANTS CRITIQUES DE SÉCURITÉ. POUR MAINTENIR LE DEGRÉ DE SÉCURITÉ DE L'APPAREIL, NE REMPLACER QUE DES PIÈCES RECOMMANDEES PAR LE FABRICANT

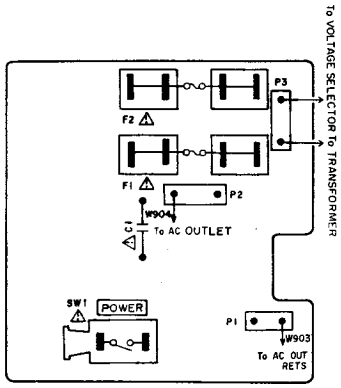

POWER SW PCB A2048A506E
AM - A302 U MODEL
AM - A402 U MODEL

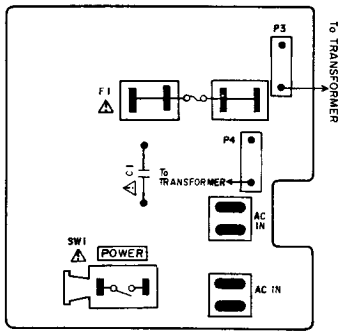

POWER SW PCB A2048A506E
AM - A302 E B S MODEL
AM - A402 E S MODEL

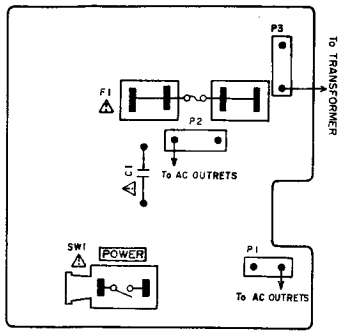

POWER SW PCB A2048A506E
AM - A302] A C MODEL
AM - A402]

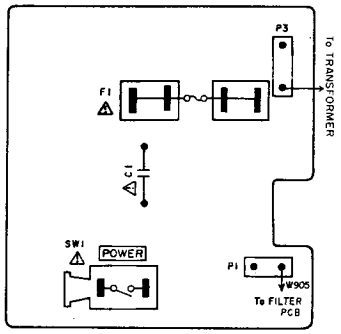

POWER SW PCB A2048A506E
AM - A302 V MODEL

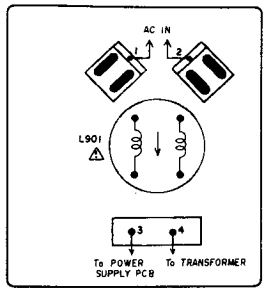

FILTER PCB A2048A501C
AM - A302 V MODEL ONLY

WARNING: ⚠ INDICATES SAFETY CRITICAL COMPONENTS FOR CONTINUED SAFETY. REPLACE SAFETY CRITICAL COMPONENTS ONLY WITH MANUFACTURER'S RECOMMENDED PARTS

AVERTISSEMENT: ⚠ IL INDIQUE LES COMPOSANTS CRITIQUES DE SÉCURITÉ. POUR MAINTENIR LE DEGRÉ DE SÉCURITÉ DE L'APPAREIL, NE REMPLACER QUE DES PIÈCES RECOMMANDEES PAR LE FABRICANT

For Service Manuals Contact
MAURITRON TECHNICAL SERVICES
8 Cherry Tree Rd, Chinnor
Oxon OX9 4QY
Tel:- 01844-351694 Fax:- 01844-352554
Email:- enquiries@mauritron.co.uk

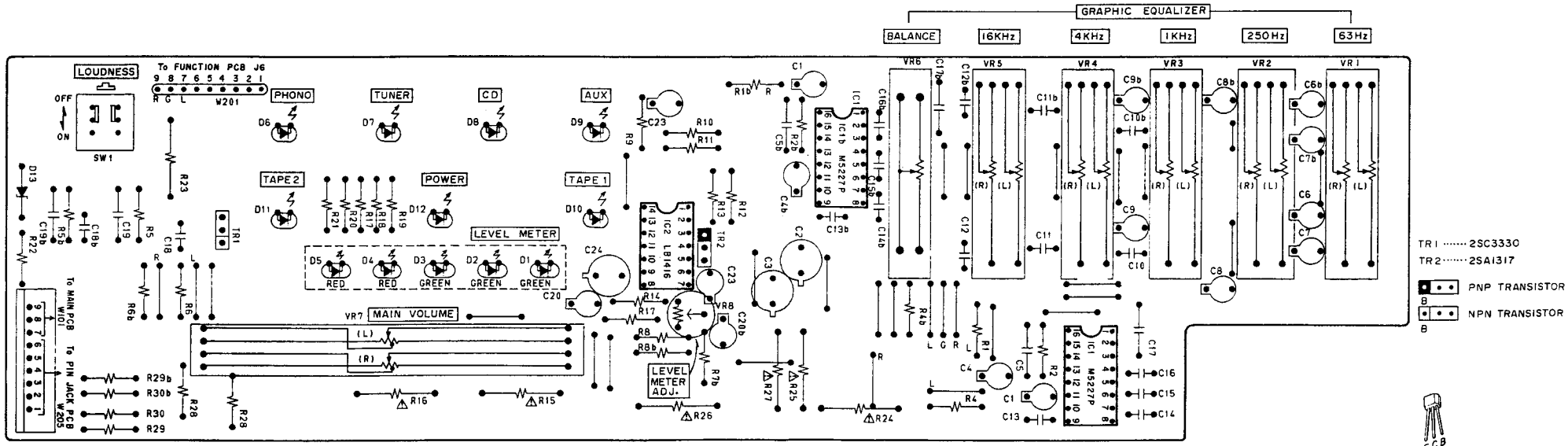

CONTROL PCB A2048A506A

For Service Manuals Contact
MAURITRON TECHNICAL SERVICES
8 Cherry Tree Rd, Chinnor
Oxon OX9 4QY
Tel:- 01844-351694 Fax:- 01844-352554
Email:- enquiries@mauritron.co.uk

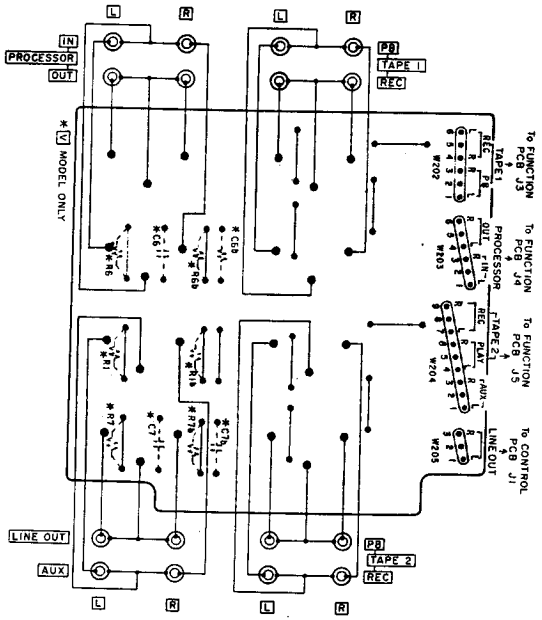

PIN JACA PCB A2048A506D

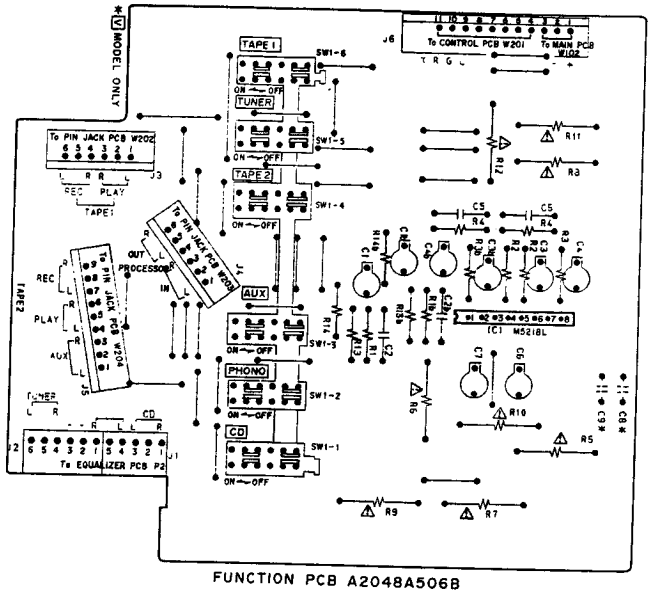

FUNCTION PCB A2048A506B

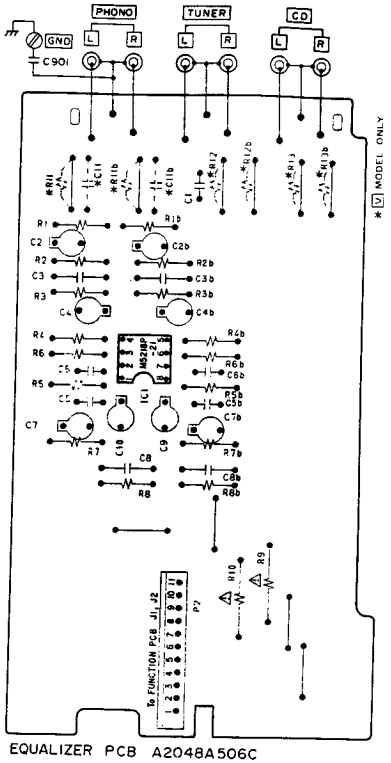

EQUALIZER PCB A2048A506C

WARNING: ⚠ INDICATES SAFETY CRITICAL COMPONENTS FOR CONTINUED SAFETY, REPLACE SAFETY CRITICAL COMPONENTS ONLY WITH MANUFACTURER'S RECOMMENDED PARTS

AVERTISSEMENT: ⚠ IL INDIQUE LES COMPOSANTS CRITIQUES DE SÉCURITÉ. POUR MAINTENIR LE DEGRÉ DE SÉCURITÉ DE L'APPAREIL, NE REMPLACER QUE DES PIÈCES RECOMMANDEES PAR LE FABRICANT

MODEL AM-A302
STK4038-2
STK4042-2

MODEL AM-A402
STK4044-2

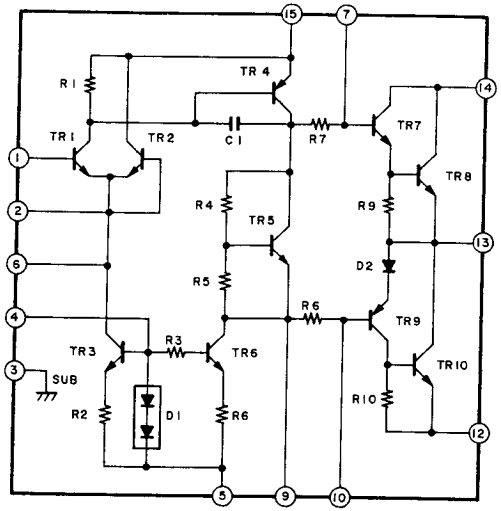

MODEL AM-A102
STK4141-2

MODEL AM-A202
STK4171-2
STK4152-2

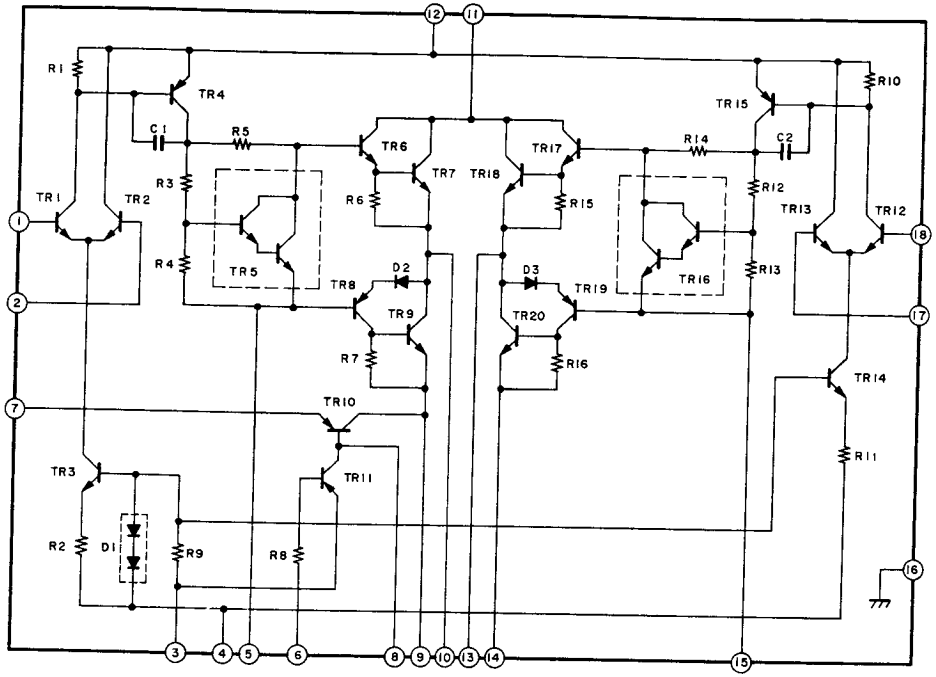

For Service Manuals Contact
MAURITRON TECHNICAL SERVICES
8 Cherry Tree Rd, Chinnor
Oxon OX9 4QY
Tel:- 01844-351694 Fax:- 01844-352554
Email:- enquiries@mauritron.co.uk