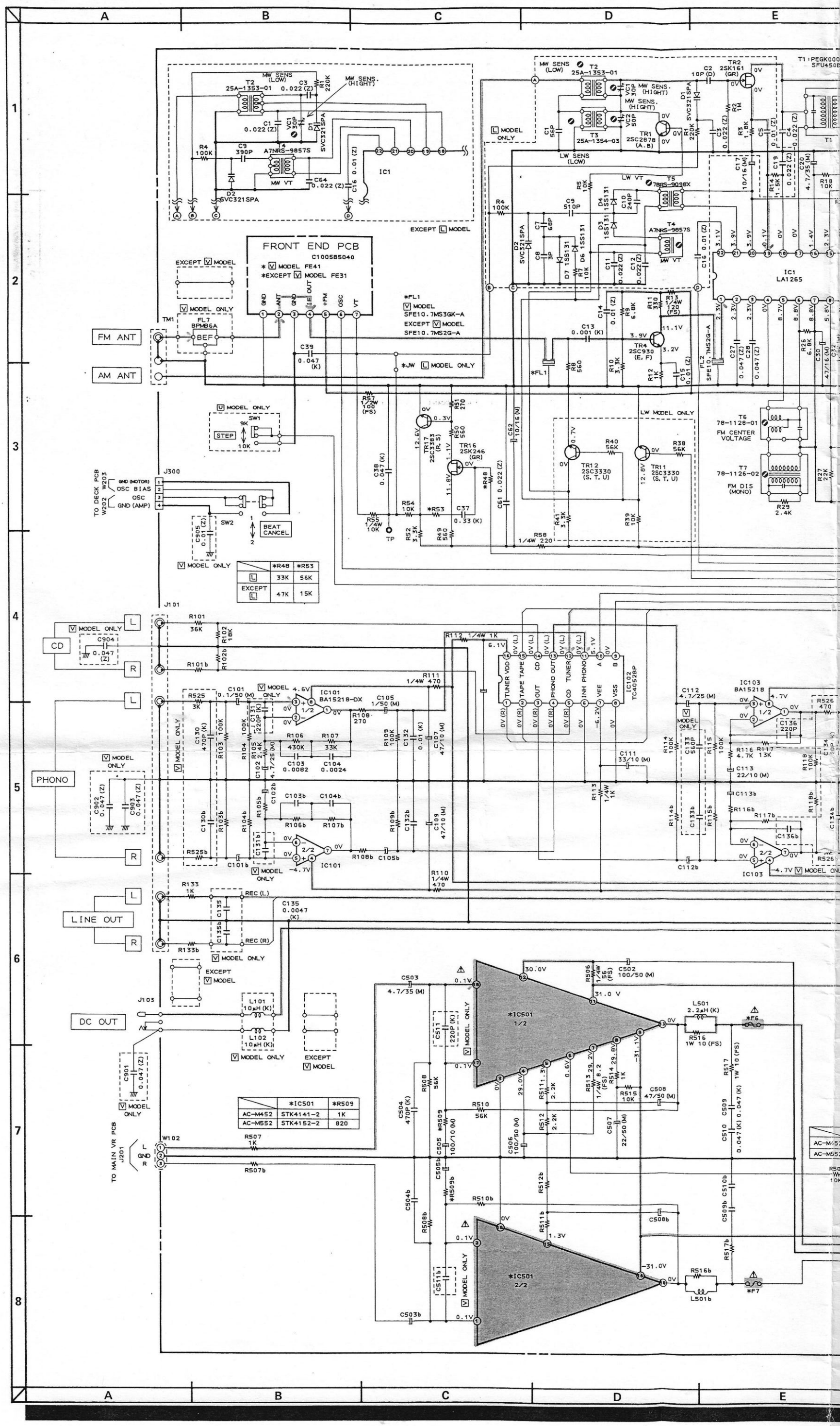
FRONT END PCB
C100585040
* V MODEL FE41
*EXCEPT V MODEL FE31
FM ANT
AM ANT
CD
PHONO
LINE OUT
DC OUT
IC1
LA1265
IC101
BA15218-DX
IC102
TC4052BP
IC103
BA15218
*IC501
1/2
*IC501
2/2
TO DECK PCB
TO MAIN VR PCB
LOCATION OF COMPONENT
IC'S
IC1 ..... D1
IC2 ..... F1
IC3 ..... B3
IC101 ..... B4
IC102 ..... C4
IC103 ..... D4
IC201 ..... C3
IC501 ..... E6
TRANSISTORS
TR1 ..... D1
TR2 ..... D1
TR4 ..... D2
TR6 ..... E1
TR8 ..... E2
TR9 ..... D2
TR10 ..... E2
TR11 ..... C2
TR12 ..... C2
TR13 ..... C3
TR14 ..... G1
TR15 ..... G1
TR16 ..... B3
TR17 ..... B3
TR18 ..... D3
TR19 ..... G2
TR20 ..... G2
TR21 ..... G2
TR103 ..... H2
TR104 ..... H2
TR105 ..... H3
TR301 ..... B6
TR302 ..... B6
TR303 ..... B6
TR304 ..... C6
TR305 ..... C6
TR306 ..... D6
TR307 ..... D6
CONNECTORS
J101 ..... A5
J103 ..... A6
J300 ..... A2, 4
J301 ..... F3
J303 ..... D3, 4
P300 ..... H1
P301 ..... G2, H2
P302 ..... H3

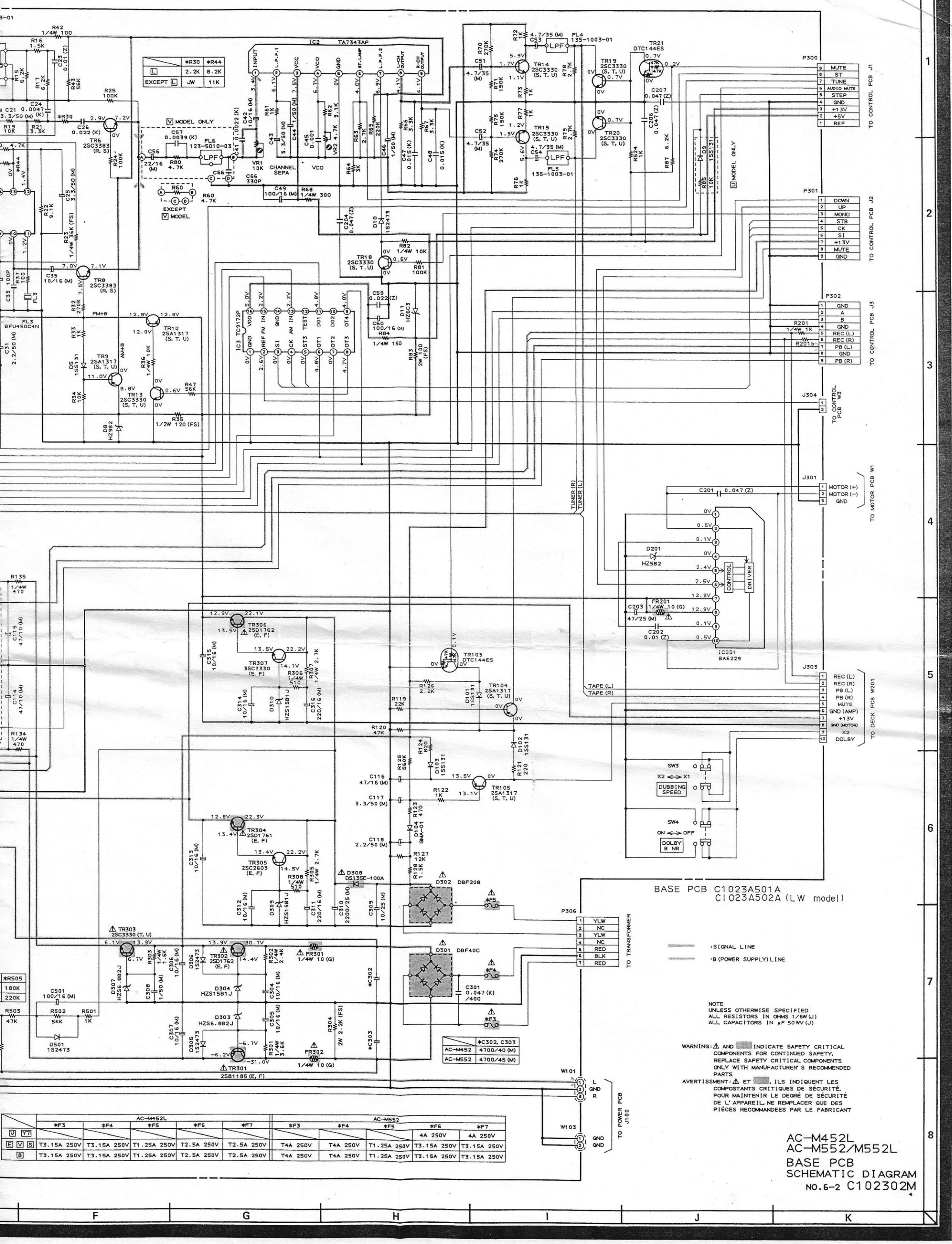

	*R30	*R44
L	2.2K	8.2K
EXCEPT L	JW	11K

	*C302, C303
AC-M452	4700/40 (M)
AC-M552	4700/45 (M)

	AC-M452L					AC-M552				
	*F3	*F4	*F5	*F6	*F7	*F3	*F4	*F5	*F6	*F7
U Y7									4A 250V	4A 250V
E V S	T3.15A 250V	T3.15A 250V	T1.25A 250V	T2.5A 250V	T2.5A 250V	T4A 250V	T4A 250V	T1.25A 250V	T3.15A 250V	T3.15A 250V
B	T3.15A 250V	T3.15A 250V	T1.25A 250V	T2.5A 250V	T2.5A 250V	T4A 250V	T4A 250V	T1.25A 250V	T3.15A 250V	T3.15A 250V

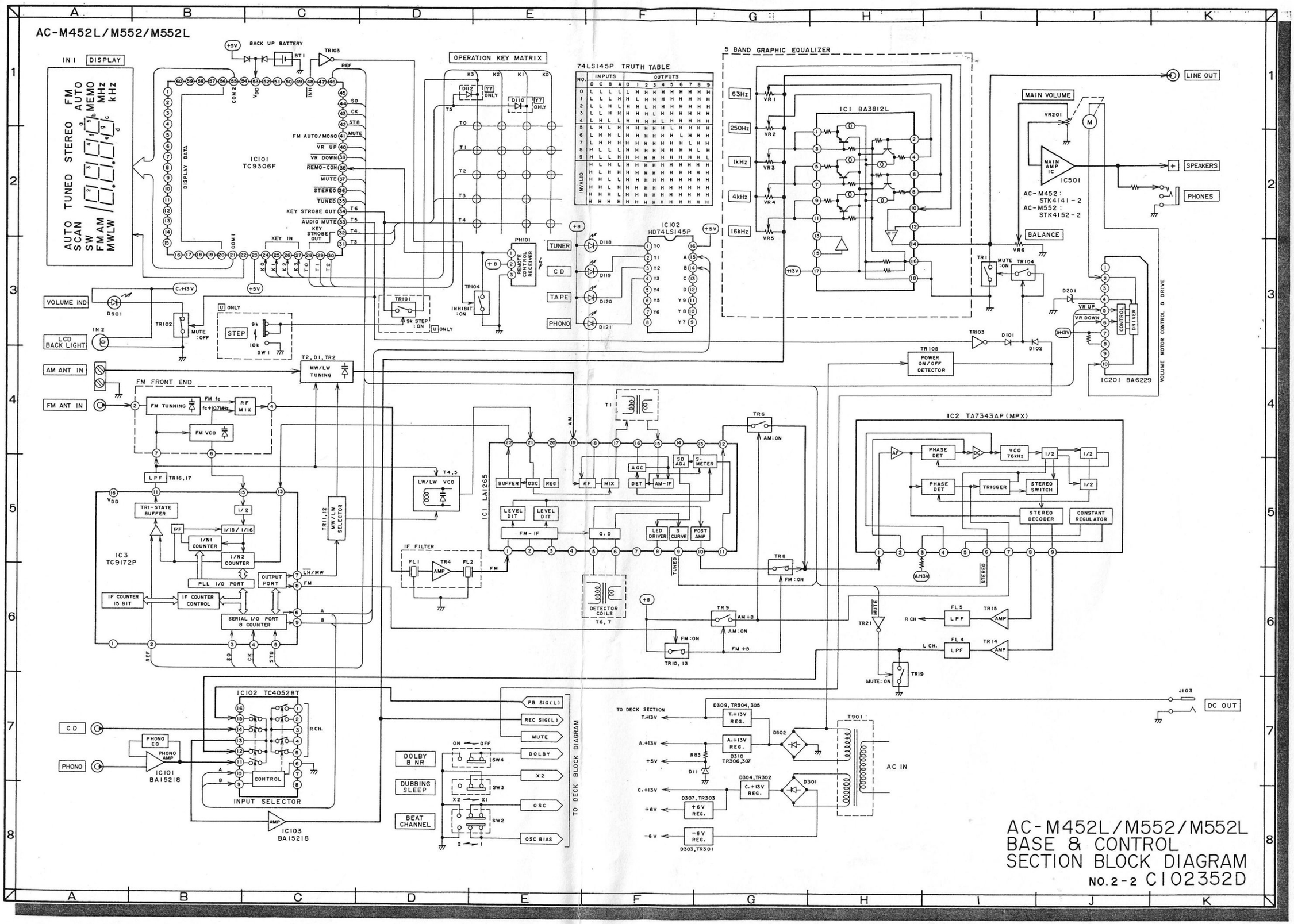
AC-M452L/M552/M552L
DISPLAY
IC101 TC9306F
DISPLAY DATA
BACK UP BATTERY
OPERATION KEY MATRIX
74LS145P TRUTH TABLE
IC102 HD74LS145P
5 BAND GRAPHIC EQUALIZER
IC1 BA3812L
MAIN VOLUME
MAIN AMP IC
IC501
AC-M452 : STK4141-2
AC-M552 : STK4152-2
LINE OUT
SPEAKERS
PHONES
BALANCE
VOLUME MOTOR CONTROL & DRIVE
IC201 BA6229
VOLUME IND
LCD BACK LIGHT
AM ANT IN
FM ANT IN
FM FRONT END
MW/LW TUNING
IC3 TC9172P
IC1 LA1265
IF FILTER
DETECTOR COILS
IC2 TA7343AP (MPX)
POWER ON/OFF DETECTOR
IC102 TC4052BT
INPUT SELECTOR
IC101 BA15218
IC103 BA15218
DOLBY B NR
DUBBING SLEEP
BEAT CHANNEL
TO DECK BLOCK DIAGRAM
DC OUT
AC IN
AC-M452L/M552/M552L
BASE & CONTROL
SECTION BLOCK DIAGRAM
NO.2-2 C102352D

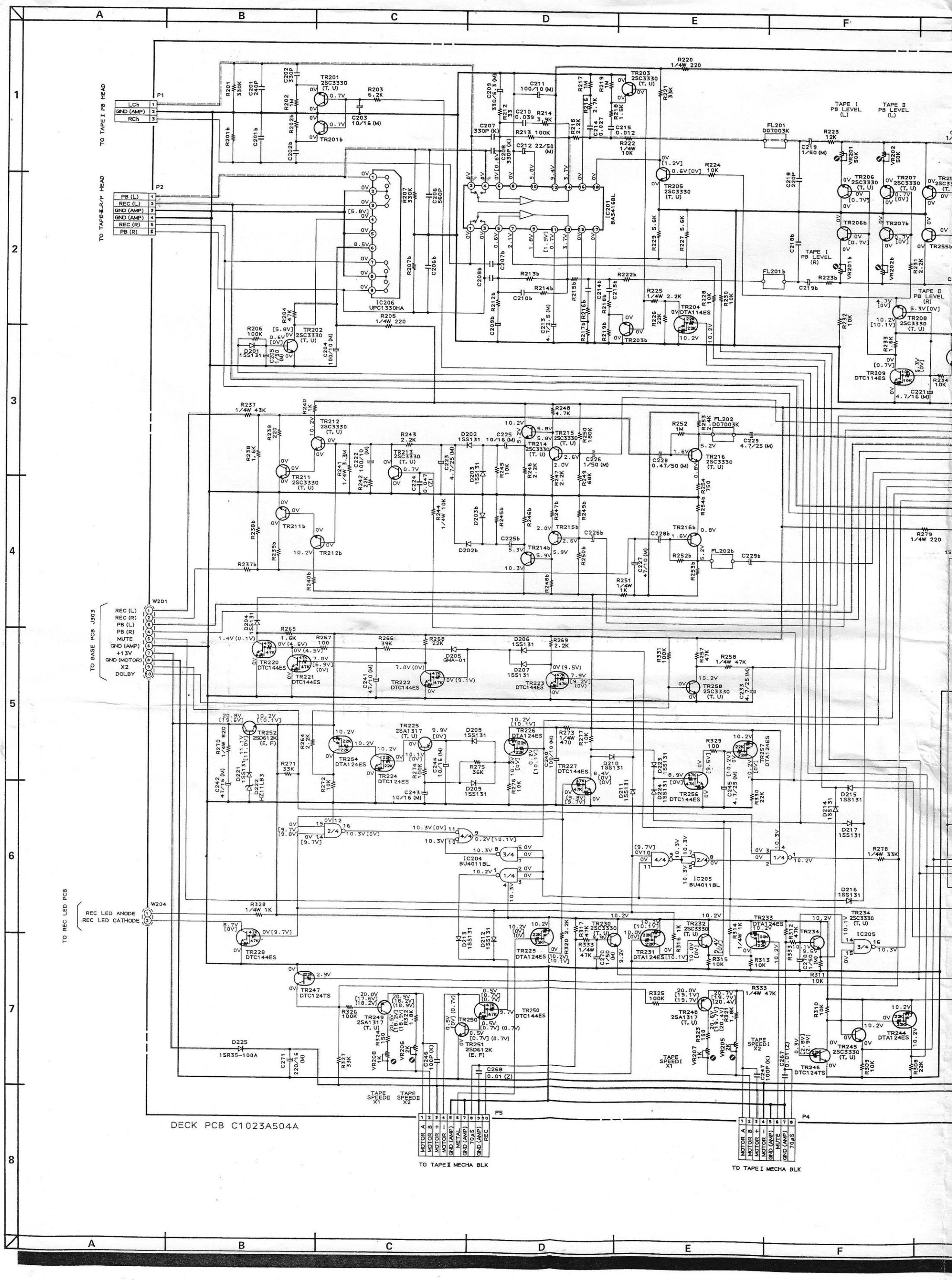
TO TAPE I PB HEAD
P1
LCh
GND (AMP)
RCh
TO TAPE II R/P HEAD
P2
PB (L)
REC (L)
GND (AMP)
GND (AMP)
REC (R)
PB (R)
IC206
UPC1330HA
IC201
BA3416BL
TAPE I PB LEVEL (L)
TAPE II PB LEVEL (L)
TAPE I PB LEVEL (R)
TAPE II PB LEVEL (R)
TO BASE PCB J303
W201
REC (L)
REC (R)
PB (L)
PB (R)
MUTE
GND (AMP)
+13V
GND (MOTOR)
X2
DOLBY
TO REC LED PCB
W204
REC LED ANODE
REC LED CATHODE
IC204
BU4011BL
IC205
BU4011BL
TAPE SPEEDI X1
TAPE SPEEDI X2
TAPE SPEEDII X1
TAPE SPEEDII X2
P5
MOTOR A
MOTOR B
MOTOR +
MOTOR -
GND (AMP)
METAL
GND (AMP)
70μS
GND (AMP)
REC
TO TAPE II MECHA BLK
P4
MOTOR A
MOTOR B
MOTOR +
MOTOR -
GND (AMP)
MUTE
GND (AMP)
70μS
TO TAPE I MECHA BLK
DECK PCB C1023A504A

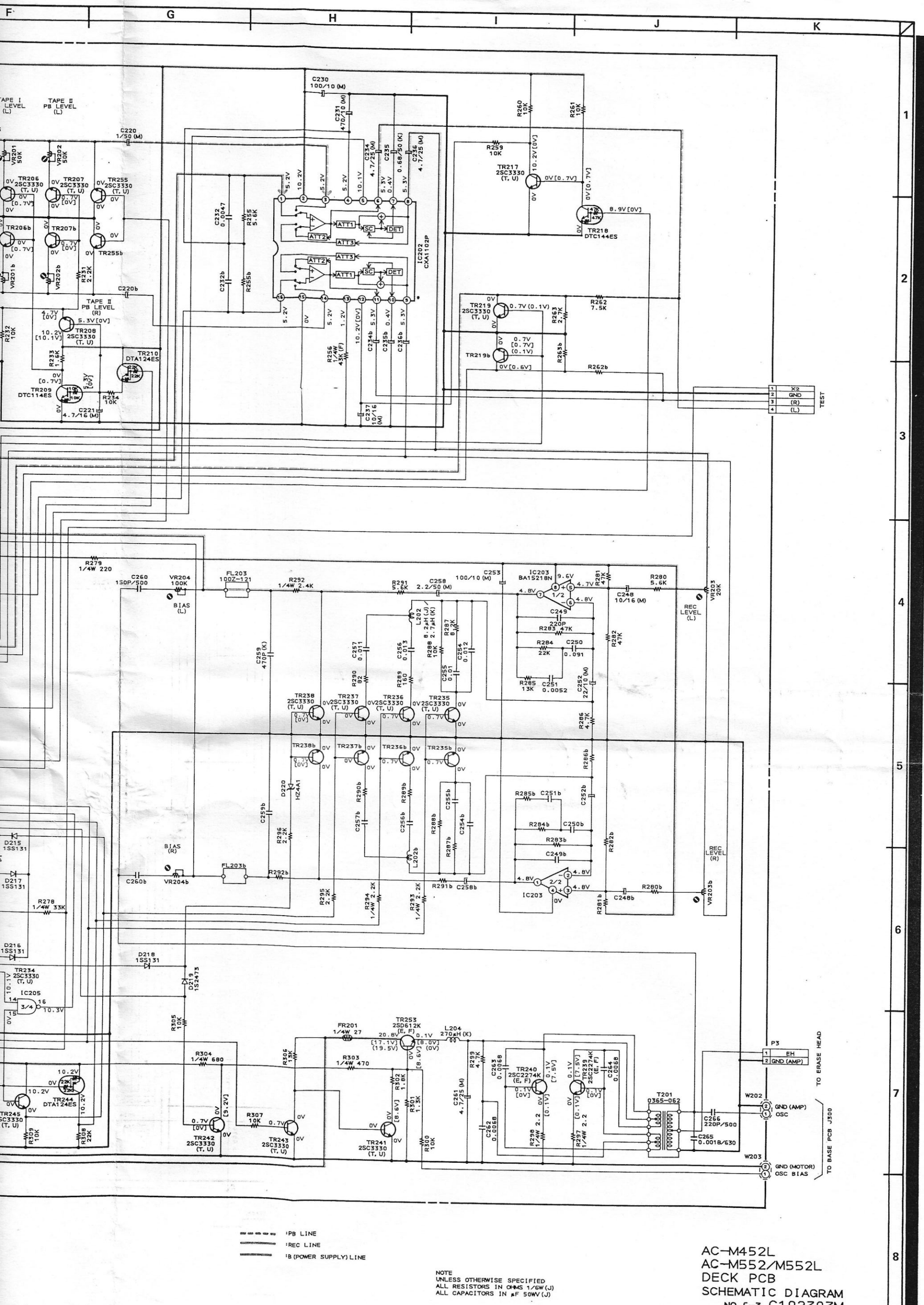

NOTE
UNLESS OTHERWISE SPECIFIED
ALL RESISTORS IN OHMS 1/6W (J)
ALL CAPACITORS IN μF 50WV (J)

AC-M452L
AC-M552/M552L
DECK PCB
SCHEMATIC DIAGRAM
NO.6-3 C102303M

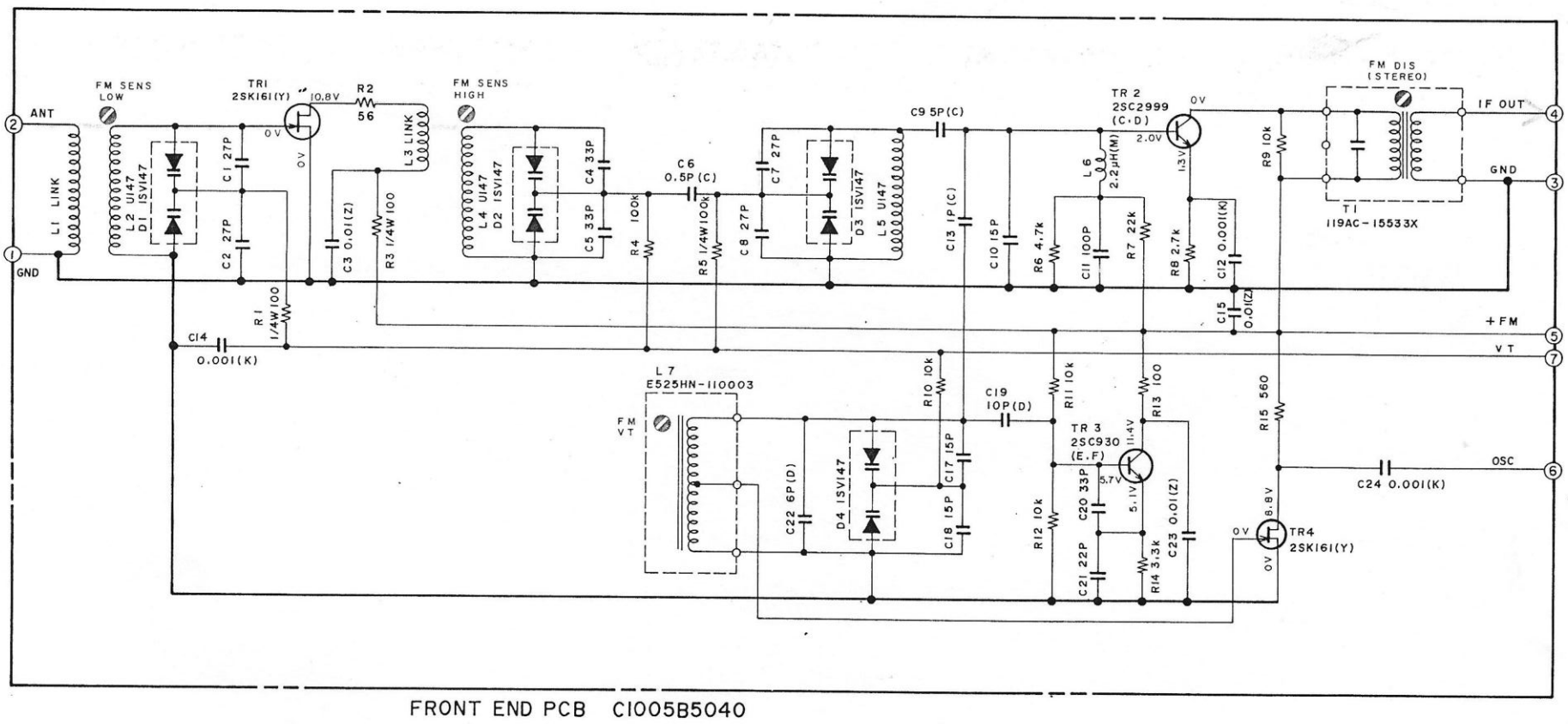

FRONT END PCB C1005B5040

NOTE
UNLESS OTHERWISE SPECIFIED
ALL RESISTORS IN OHMS 1/6W(J)
ALL CAPACITORS IN μF 50WV(J)

: SIGNAL LINE

FE41(V)/(U) FRONT END SCHEMATIC DIAGRAM

NO.6-5 861004A(A3)

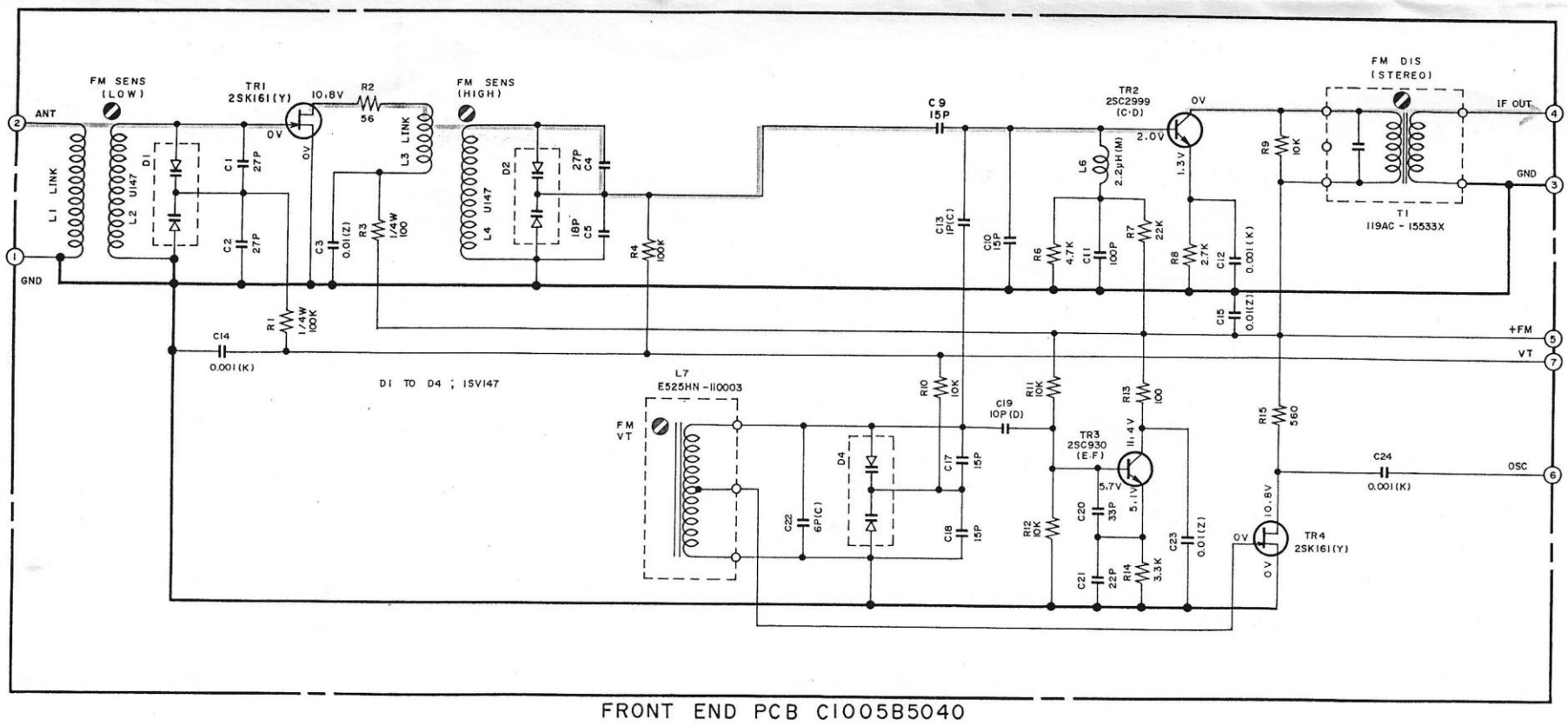

FRONT END PCB C1005B5040

: SIGNAL LINE

NOTE
UNLESS OTHERWISE SPECIFIED;
ALL RESISTORS IN OHMS 1/6W(J)
ALL CAPACITORS IN μF 50WV(J)

FE31(U) FRONT END SCHEMATIC DIAGRAM

NO.6-6 870716A

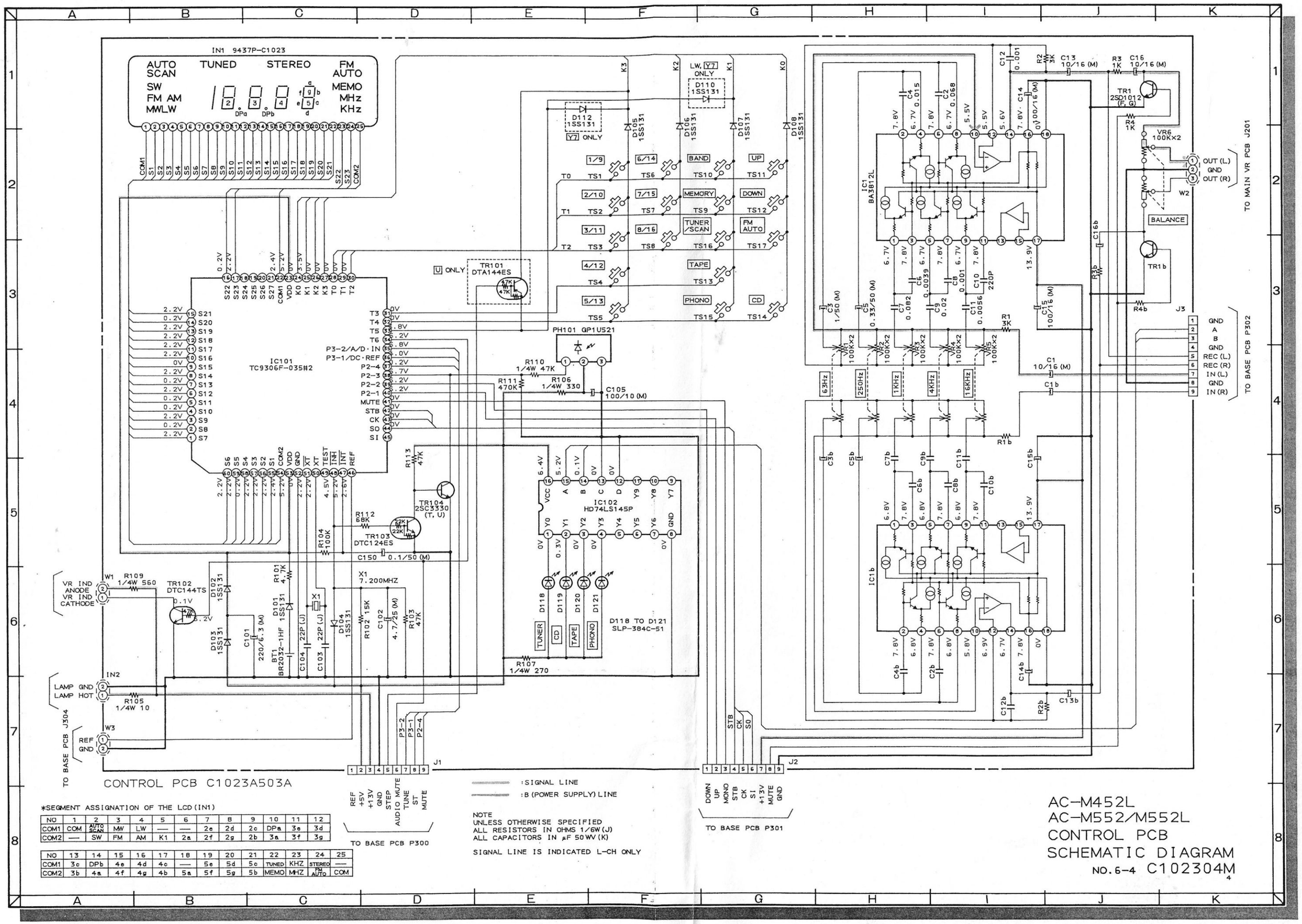

*SEGMENT ASSIGNATION OF THE LCD (IN1)

NO	1	2	3	4	5	6	7	8	9	10	11	12
COM1	COM	AUTO SCAN	MW	LW	—	—	2e	2d	2c	DPa	3e	3d
COM2	—	SW	FM	AM	K1	2a	2f	2g	2b	3a	3f	3g

NO	13	14	15	16	17	18	19	20	21	22	23	24	25
COM1	3c	DPb	4e	4d	4c	—	5e	5d	5c	TUNED	KHZ	STEREO	—
COM2	3b	4a	4f	4g	4b	5a	5f	5g	5b	MEMO	MHZ	FM AUTO	COM

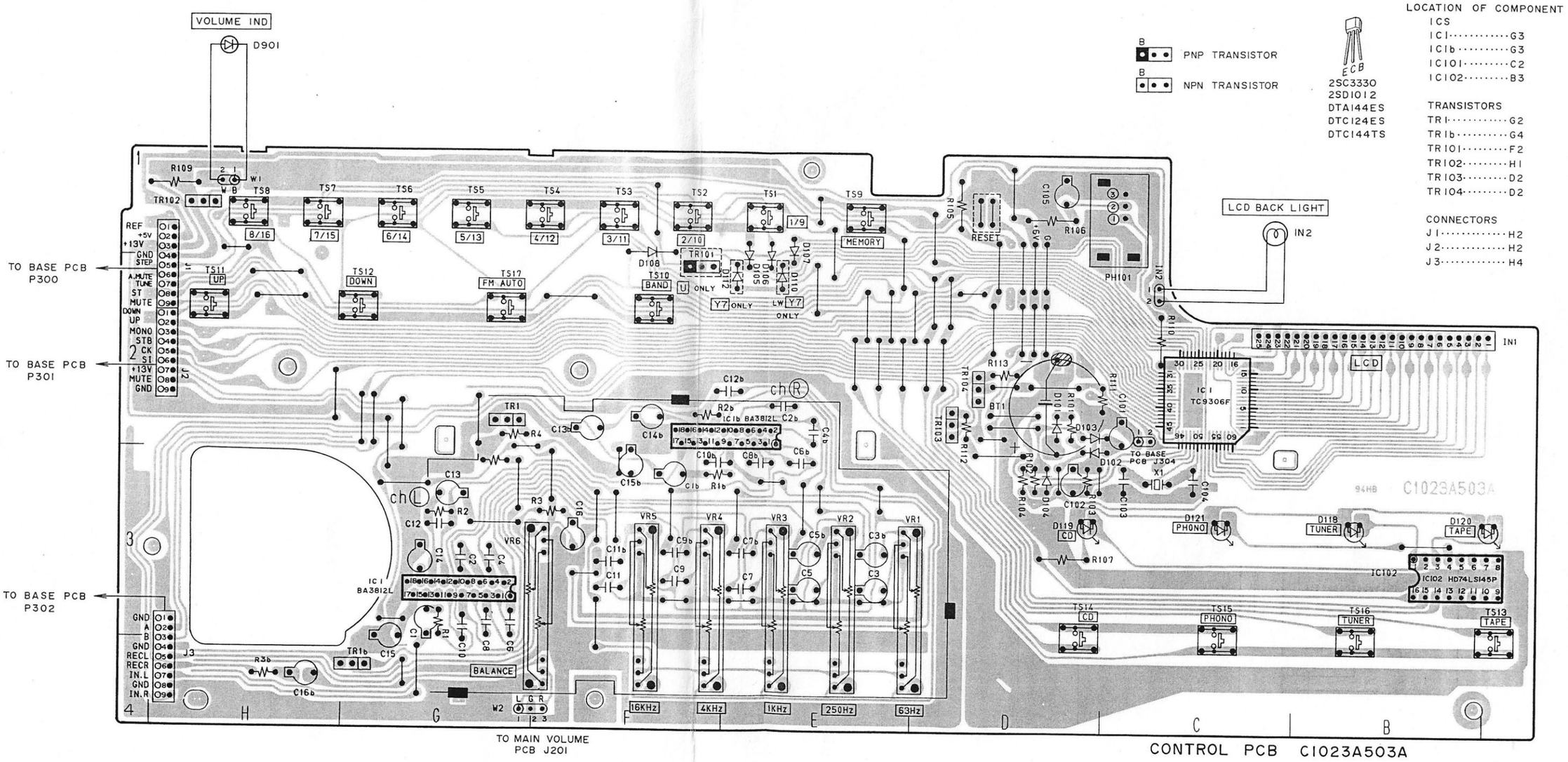

CONTROL PCB C1023A503A

PNP TRANSISTOR

NPN TRANSISTOR

2SC3330
2SD1012
DTA144ES
DTC124ES
DTC144TS

LOCATION OF COMPONENT

ICS
IC1 ····· G3
IC1b ····· G3
IC101 ····· C2
IC102 ····· B3

TRANSISTORS
TR1 ····· G2
TR1b ····· G4
TR101 ····· F2
TR102 ····· H1
TR103 ····· D2
TR104 ····· D2

CONNECTORS
J1 ····· H2
J2 ····· H2
J3 ····· H4

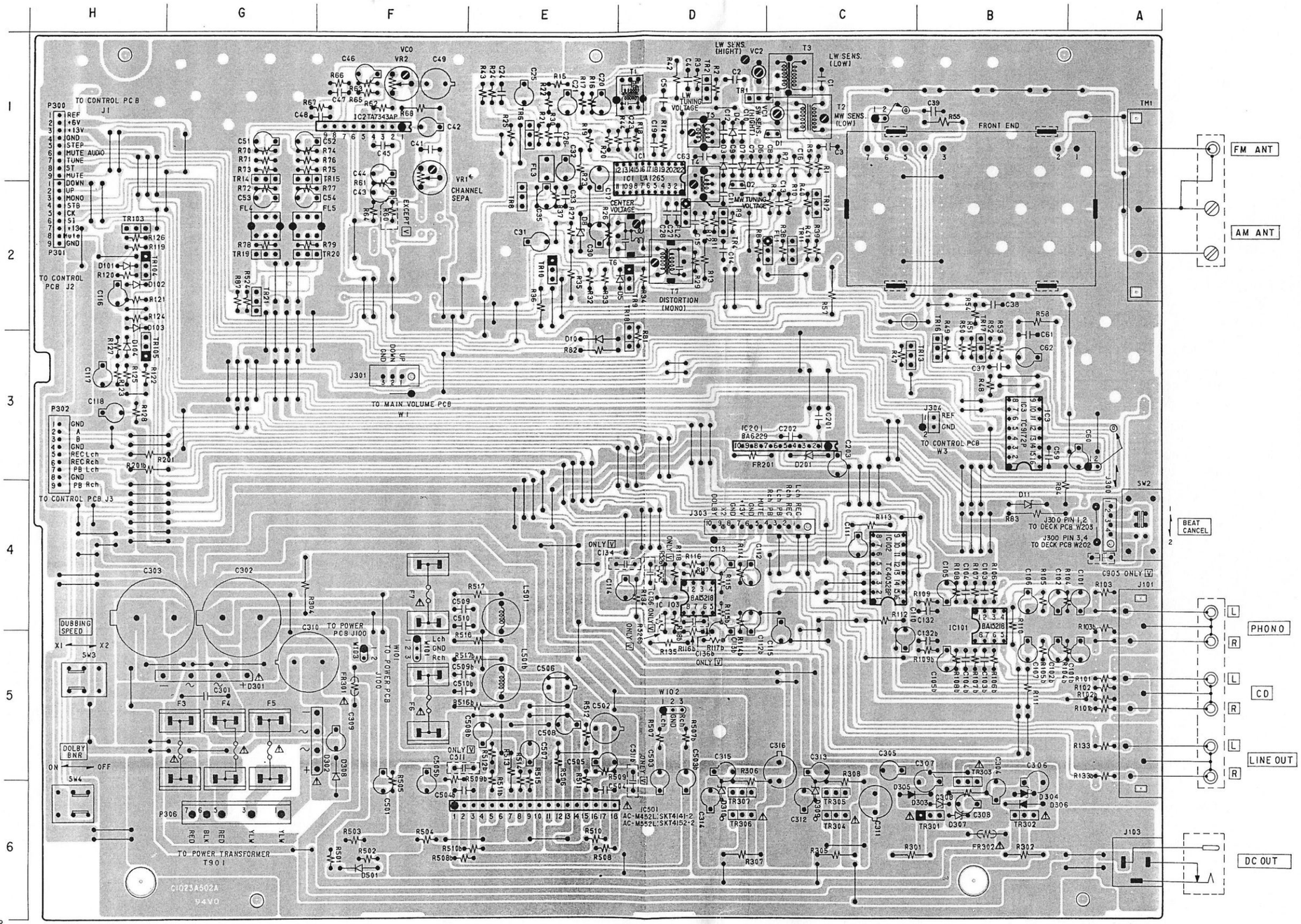

B • • • = NPN TRANSISTOR

B • • • = PNP TRANSISTOR

WARNING: ⚠ INDICATES SAFETY CRITICAL COMPONENTS FOR CONTINUED SAFETY. REPLACE SAFETY CRITICAL COMPONENTS ONLY WITH MANUFACTURER'S RECOMMENDED PARTS

AVERTISSEMENT: ⚠ IL INDIQUE LES COMPOSANTS CRITIQUES DE SÉCURITÉ. POUR MAINTENIR LE DEGRÉ DE SÉCURITÉ DE L'APPAREIL, NE REMPLACER QUE DES PIÈCES RECOMMANDÉES PAR LE FABRICANT

BASE PCB C1023A502A (LW model)

LOCATION OF COMPONENT

IC'S
IC1 ..... D1
IC2 ..... F1
IC3 ..... B3
IC101 ..... B4
IC102 ..... C4
IC103 ..... D4
IC201 ..... C3
IC501 ..... E6

TRANSISTORS
TR1 ..... D1
TR2 ..... D1
TR4 ..... D2
TR6 ..... E1
TR8 ..... E2
TR9 ..... D2
TR10 ..... E2
TR11 ..... C2
TR12 ..... C2
TR13 ..... C3
TR14 ..... G1
TR15 ..... G1
TR16 ..... B3
TR17 ..... B3
TR18 ..... D3
TR19 ..... G2
TR20 ..... G2
TR21 ..... G2
TR103 ..... H2
TR104 ..... H2
TR105 ..... H3
TR301 ..... B6
TR302 ..... B6
TR303 ..... B6
TR304 ..... C6
TR305 ..... C6
TR306 ..... D6
TR307 ..... D6

CONNECTORS
J101 ..... A5
J103 ..... A6
J300 ..... A2, 4
J301 ..... F3
J303 ..... D3, 4
P300 ..... H1
P301 ..... G2, H2
P302 ..... H3

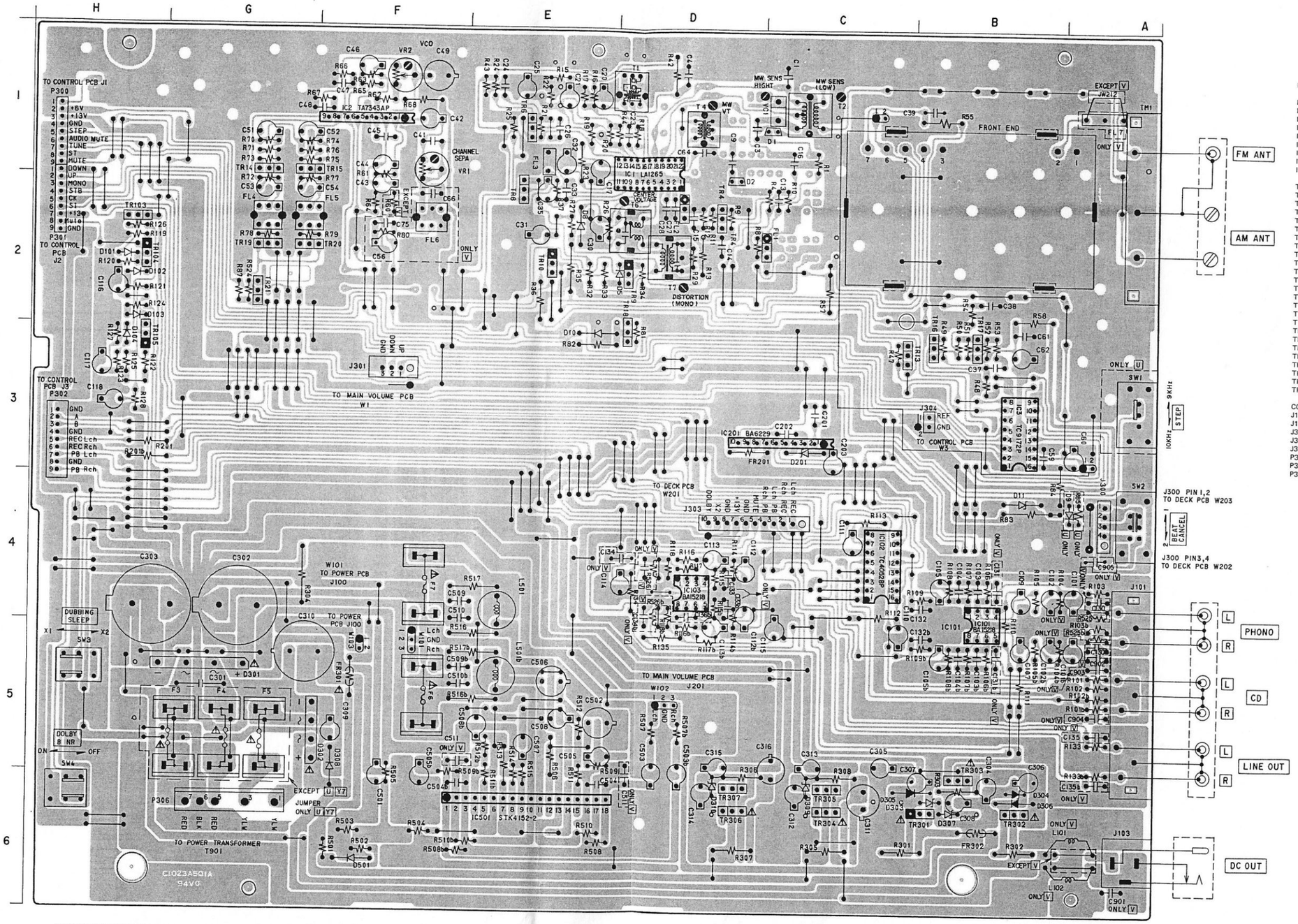

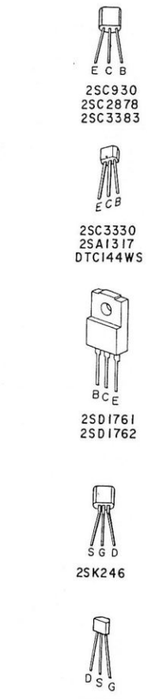

B = NPN TRANSISTOR

B = PNP TRANSISTOR

WARNING: ⚠ INDICATES SAFETY CRITICAL COMPONENTS FOR CONTINUED SAFETY. REPLACE SAFETY CRITICAL COMPONENTS ONLY WITH MANUFACTURER'S RECOMMENDED PARTS

AVERTISSEMENT: ⚠ IL INDIQUE LES COMPOSANTS CRITIQUES DE SÉCURITÉ. POUR MAINTENIR LE DEGRÉ DE SÉCURITÉ DE L'APPAREIL, NE REMPLACER QUE DES PIÈCES RECOMMANDEES PAR LE FABRICANT

BASE PCB C1023A501A

LOCATION OF COMPONENT

IC'S
IC1 ..... D1
IC2 ..... F1
IC3 ..... B3
IC101 ..... B4
IC102 ..... C4
IC103 ..... D4
IC201 ..... C3
IC501 ..... E6

TRANSISTORS
TR4 ..... D2
TR6 ..... E1
TR8 ..... E2
TR9 ..... D2
TR10 ..... E2
TR13 ..... C3
TR14 ..... G1
TR15 ..... G1
TR16 ..... B3
TR17 ..... B3
TR18 ..... D3
TR19 ..... G2
TR20 ..... G2
TR21 ..... G2
TR103 ..... H2
TR104 ..... H2
TR105 ..... H3
TR301 ..... B6
TR302 ..... B6
TR303 ..... B6
TR304 ..... C6
TR305 ..... C6
TR306 ..... D6
TR307 ..... D6

CONNECTORS
J101 ..... A5
J103 ..... A6
J300 ..... A4
J301 ..... F3
J303 ..... D4
P300 ..... H1
P301 ..... H2
P302 ..... H3

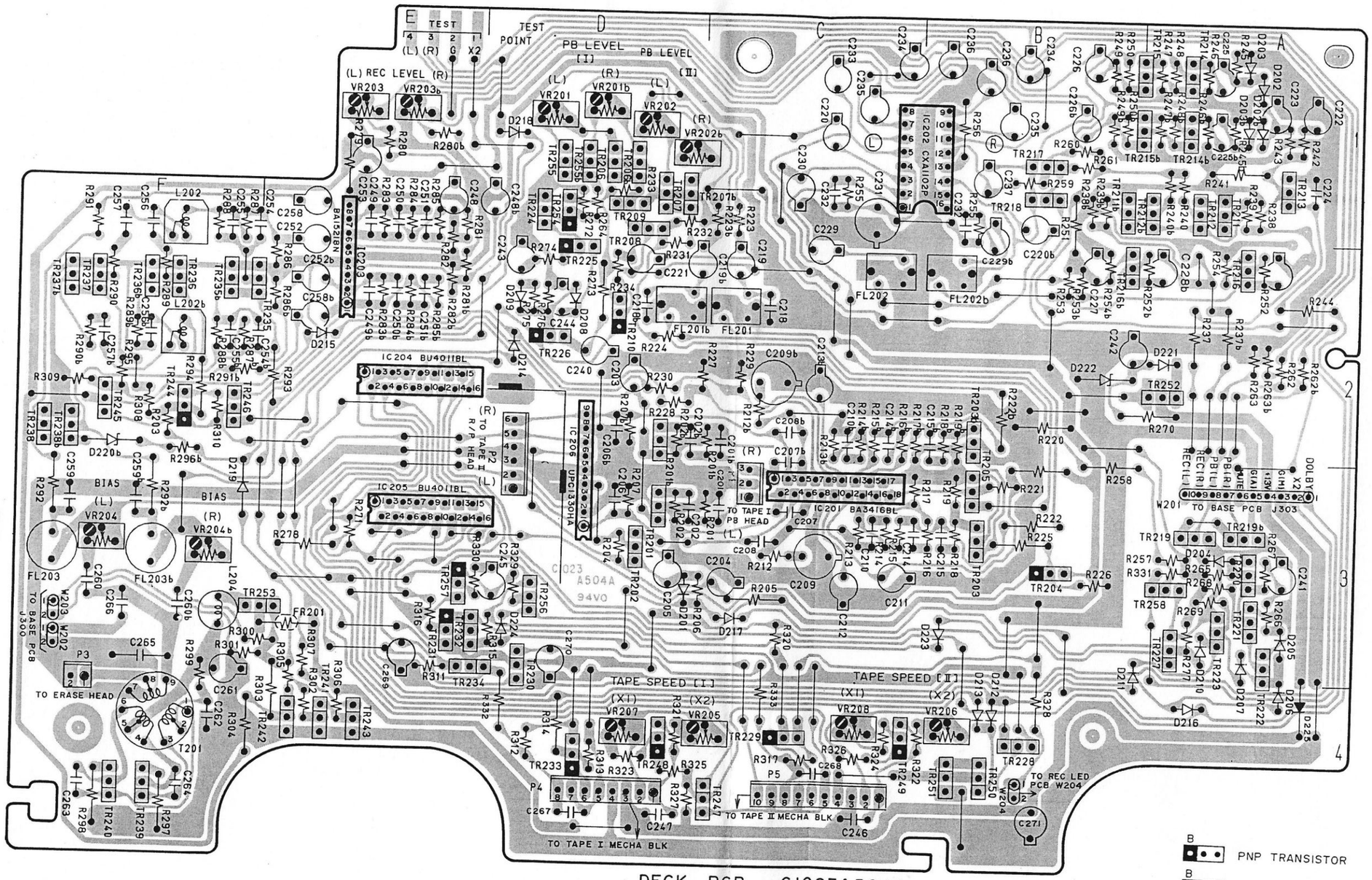

DECK PCB C1023A504A

LOCATION OF COMPONENT

ICS

IC201 ····· C3
IC202 ····· C1
IC203 ····· E2
IC204 ····· E2
IC205 ····· E3
IC206 ····· D2

CONNECTORS

P1 ····· C3
P2 ····· D3
P3 ····· F4
P4 ····· D4
P5 ····· C4

TRANSISTORS

TR201 ····· D3
TR201b ····· D3
TR202 ····· D3
TR203 ····· B3
TR203b ····· B2
TR204 ····· B3
TR205 ····· B3
TR206 ····· D1
TR206b ····· D1
TR207 ····· D1
TR207b ····· D1
TR208 ····· D1
TR209 ····· D1
TR211 ····· A1
TR211b ····· B1
TR212 ····· A1
TR212b ····· A1
TR213 ····· A1
TR214 ····· A1
TR214b ····· A1
TR215 ····· A1
TR215b ····· A1
TR216 ····· A2
TR216b ····· A2
TR217 ····· B1
TR218 ····· B1
TR218 ····· B1
TR219 ····· A3
TR219b ····· A3
TR220 ····· A3
TR221 ····· A3
TR222 ····· A3
TR223 ····· A3
TR224 ····· D1
TR225 ····· D2
TR226 ····· D2
TR227 ····· A3
TR228 ····· B4
TR229 ····· C4
TR230 ····· D4
TR231 ····· E3
TR232 ····· E3
TR233 ····· D4
TR234 ····· D4
TR235 ····· E3
TR235b ····· F2
TR236 ····· F2
TR236b ····· F2
TR237 ····· F2
TR237b ····· F2
TR238 ····· F2
TR238b ····· F2
TR239 ····· F4
TR240 ····· F4
TR241 ····· E4
TR242 ····· E4
TR243 ····· E4
TR244 ····· F2
TR245 ····· F2
TR246 ····· F2
TR247 ····· C4
TR248 ····· D4
TR249 ····· C4
TR250 ····· B4
TR251 ····· B4
TR252 ····· A2
TR253 ····· F3
TR254 ····· D1
TR255 ····· D1
TR255b ····· D1
TR256 ····· D3
TR257 ····· E3
TR258 ····· A3

B PNP TRANSISTOR

B NPN TRANSISTOR

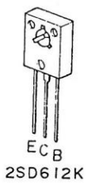

2SD612K

2SC3330
DTA114ES
DTA124ES
DTC114ES
DTC144ES