SERVICE MANUAL

PARTS LIST

AA-1135
MODEL AA-1150

AKAI

ALSO APPLICABLE TO BLACK MODEL

www.hifiengine.com

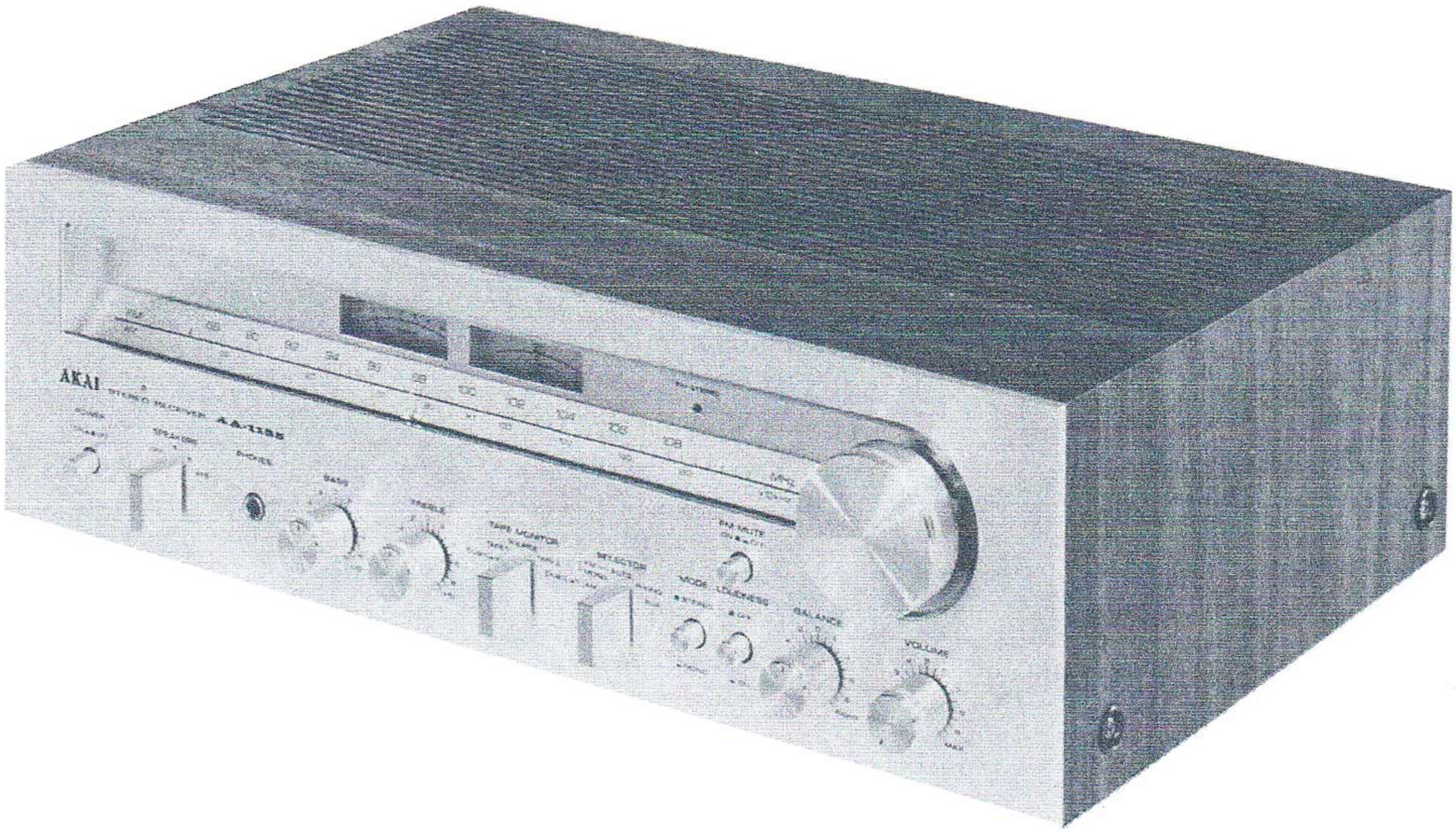

AKAI STEREO RECEIVER

MODEL AA-1135 AA-1150

SECTION 1 SERVICE MANUAL 2
SECTION 2 PARTS LIST 31
SECTION 3 SCHEMATIC DIAGRAM 48

SECTION 1

SERVICE MANUAL

TABLE OF CONTENTS

I. TECHNICAL DATA 3
II. DISMANTLING OF UNIT 5
III. CONTROLS 6
1. MODEL AA-1135 6
2. MODEL AA-1150 7
IV. PRINCIPAL PARTS LOCATION 8
1. MODEL AA-1135 8
2. MODEL AA-1150 9
V. OPERATING PRINCIPLES OF QUADRATURE DETECTION SYSTEM 10
VI. OPERATING PRINCIPLES OF PLL CIRCUIT EMPLOYED IN STEREO DEMODULATION CIRCUIT 12
1. PLL CIRCUIT OPERATION 12
2. STEREO DEMODULATION CIRCUIT 13
VII. LEVEL DIAGRAM 14
1. MODEL AA-1135 14
2. MODEL AA-1150 15
VIII. TUNER ADJUSTMENT 16
1. FM TUNER SECTION ADJUSTMENT 17
2. AM TUNER SECTION ADJUSTMENT 18
IX. MAIN AMPLIFIER ADJUSTMENT 19
X. TUNING CORD THREADING 20
XI. CLASSIFICATION OF VARIOUS P.C BOARDS 21
1. RELATION OF P.C. BOARD TITLE AND IDENTIFICATION NUMBER 21
2. MODEL AA-1135 COMPOSITION OF VARIOUS P.C BOARDS 22
3. MODEL AA-1150 COMPOSITION OF VARIOUS P.C BOARDS 25

For basic adjustments, measuring methods, and operating principles, refer to GENERAL OPERATING PRINCIPLES AND ADJUSTMENTS.

www.hifiengine.com

I. TECHNICAL DATA

AMPLIFIER SECTION

	AA-1135	AA-1150
POWER OUTPUT	35 watts per channel, min RMS, at 8 ohms from 20 to 20,000 Hz with no more than 0.2% T.H.D.	50 watts per channel, min RMS, at 8 ohms from 20 to 20,000 Hz with no more than 0.1% T.H.D.
POWER BAND WIDTH (IHF)	6 Hz to 50 kHz T.H.D. 0.2% at 8 ohms	6 Hz to 50 kHz T.H.D. 0.1% at 8 ohms
S/N RATIO PHONO AUX	Better than 80 dB Better than 90 dB	Better than 80 dB Better than 90 dB
RESIDUAL NOISE	Less than 0.8 mV at 8 ohms	Less than 0.5 mV at 8 ohms
CHANNEL SEPARATION (IHF) PHONO	Better than 55 dB at 1 kHz	Better than 55 dB at 1 kHz
DAMPING FACTOR	More than 30 (1 kHz, 8 ohms)	More than 30 (1 kHz, 8 ohms)
OUTPUT SPEAKER HEADPHONES	A, B (4 to 16 ohms)/A+B (8 to 16 ohms) 4 to 16 ohms	A, B (4 to 16 ohms)/A+B (8 to 16 ohms) 4 to 16 ohms
INPUT SENSITIVITY/IMPEDANCE PHONO AUX	 3 mV/47 kohms 150 mV/100 kohms	 3 mV/47 kohms 150 mV/100 kohms
TAPE MONITOR 1) INPUT OUTPUT 2) INPUT OUTPUT	PIN: 150 mV/100 kohms DIN: 150 mV/100 kohms PIN: 150 mV/4 kohms DIN: 30 mV/30 kohms PIN: 150 mV/100 kohms PIN: 150 mV/100 kohms	PIN: 150 mV/100 kohms DIN: 150 mV/100 kohms PIN: 150 mV/4 kohms DIN: 30 mV/30 kohms PIN: 150 mV/100 kohms PIN: 150 mV/100 kohms
FREQUENCY RESPONSE PHONO (RIAA) AUX/TAPE MONITOR	 30 Hz to 15 kHz ±1 dB 6 Hz to 70 kHz +0 dB, −2 dB	 30 Hz to 15 kHz ±1 dB 6 Hz to 70 kHz +0 dB, −2 dB
TONE CONTROL BASS TREBLE	±9 dB at 100 Hz ±9 dB at 10 kHz	±9 dB at 100 Hz ±9 dB at 10 kHz
LOUDNESS CONTROL	±10 dB at 100 Hz, +5 dB at 10 kHz (Volume control set −30 dB position)	+10 dB at 100 Hz, +5 dB at 10 kHz (Volume control set −30 dB position)
FILTER HIGH LOW		−6 dB at 10 kHz −6 dB at 50 Hz

TUNER SECTION

FM

	AA-1135	AA-1150
FREQUENCY RANGE	88 MHz to 108 MHz	88 MHz to 108 MHz
SENSITIVITY (IHF)	1.8 μV	1.7 μV
CAPTURE RATIO	1.3 dB	1.3 dB
SELECTIVITY (IHF)	More than 70 dB	More than 70 dB
IMAGE REJECTION	More than 65 dB (at 98 MHz)	More than 90 dB (at 98 MHz)
IF REJECTION	More than 90 dB (at 98 MHz)	More than 100 dB (at 98 MHz)
SPRIOUS REJECTION	More than 90 dB (at 98 MHz)	More than 100 dB (at 98 MHz)
AM SUPRESSION	50 dB	50 dB
S/N RATIO	65 dB	65 dB
HARMONIC DISTORTION MONO STEREO	Less than 0.2% (100% Mod.) Less than 0.4% (100% Mod.)	Less than 0.15% (100 Mod.) Less than 0.3% (100 Mod.)
STREO SEPARATION	More than 40 dB at 1 kHz	More than 42 dB at 1 kHz
SUBCARRIER SUPPRESSION	More than 52 dB	More than 75 dB

AM

FREQUENCY RANGE	520 kHz to 1,605 kHz	520 kHz to 1,605 kHz
SENSITIVITY (IHF)	180 μV/m (Bar antenna), 10 μV (External antenna)	180 μV/m (Bar antenna), 10 μV (External antenna)
SELECTIVITY (IHF)	More than 30 dB	More than 30 dB
IMAGE REJECTION	More than 65 dB at 1 MHz	More than 65 dB at 1 MHz
IF REJECTION	More than 45 dB	More than 45 dB
S/N RATIO	45 dB	45 dB

TUNING INDICATOR METER	FM center tuning/AM, FM signal strength meter	FM center tuning/AM, FM signal strength meter
MUTING LEVEL CONTROL	Switchable to ON/OFF	Switchable to ON/OFF, 3 to 300 μV Variable
ANTENNA INPUT IMPEDANCE	300 ohms balanced, 75 ohms unbalanced	300 ohms balanced, 75 ohms unbalanced

www.hifiengine.com

MISCELLANEOUS

	AA-1135	AA-1150
TRANSISTORS	37	39
DIODES	20	24
FET	1	1
ICs	4	4
POWER REQUIREMENTS	U.S.A. & Canada models: 120V, 60 Hz CEE models: 220V, 50 Hz Other models: 110/220/240 V switchable, 50/60 Hz	U.S.A. & Canada models: 120V, 60 Hz CEE models: 220V, 50 Hz Other models: 110/220/240V switchable, 50/60 Hz
DIMENSIONS	480(W) x 155(H) x 345(D) mm (18.9 x 6.1 x 13.6 inches)	480(W) x 155(H) x 345(D) mm (18.9 x 6.1 x 13.6 inches)
WEIGHT	10.8 kg (23.8 lbs)	11.7 kg (25.7 lbs)

* For improvement purposes, specifications and design are subject to change without notice.

www.hifiengine.com

II. DISMANTLING OF UNIT

In case of trouble, etc. necessitating disassembly, please desassemble in the order shown in photographs. Reassemble in reverse order.

1

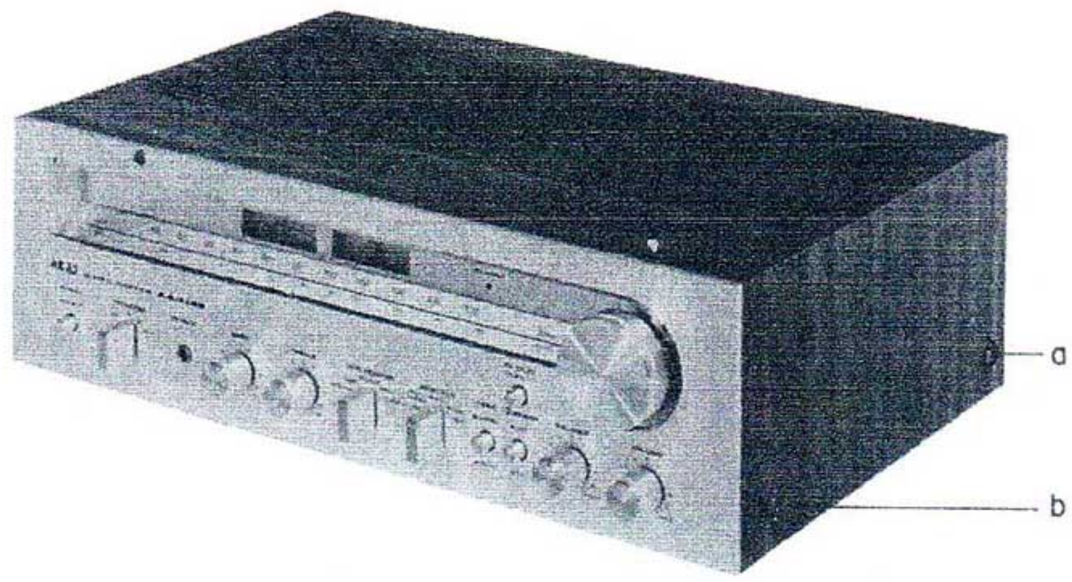

SCREWS

2

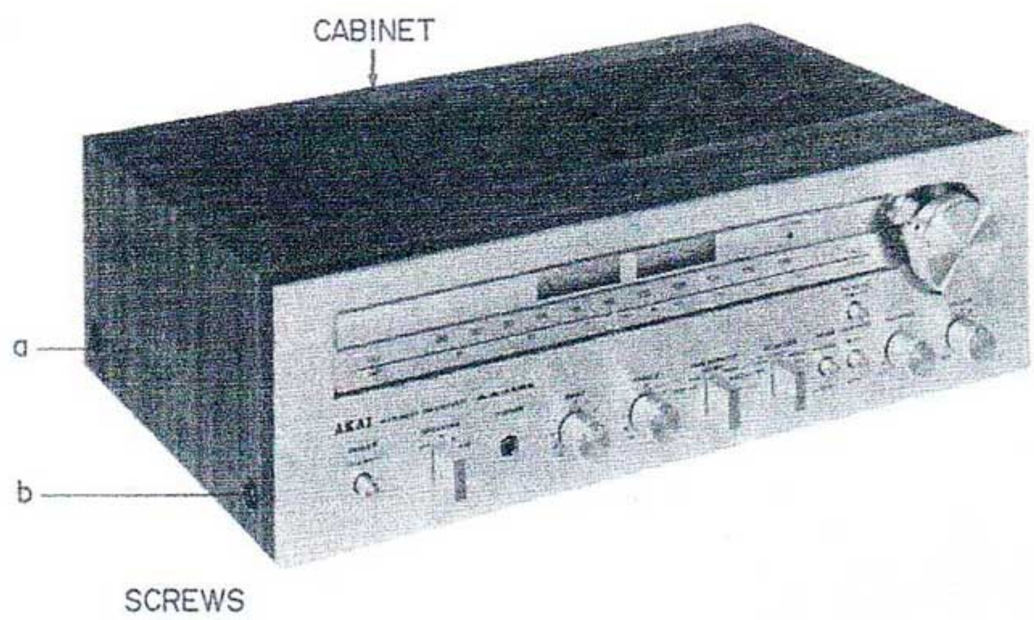

SCREWS

3

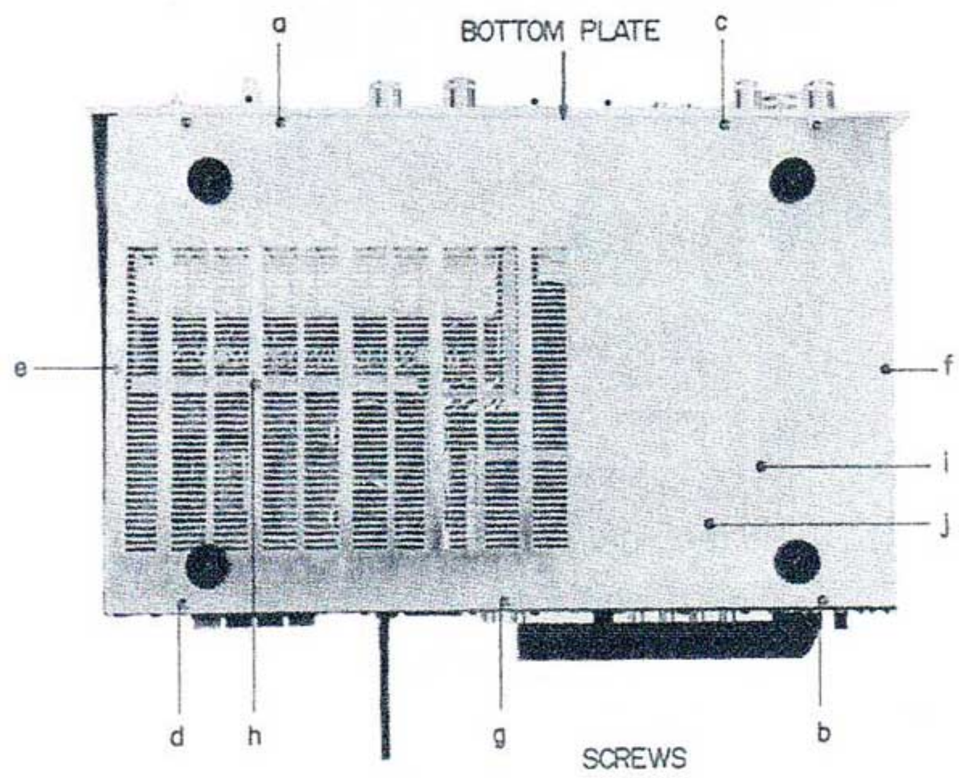

SCREWS

4

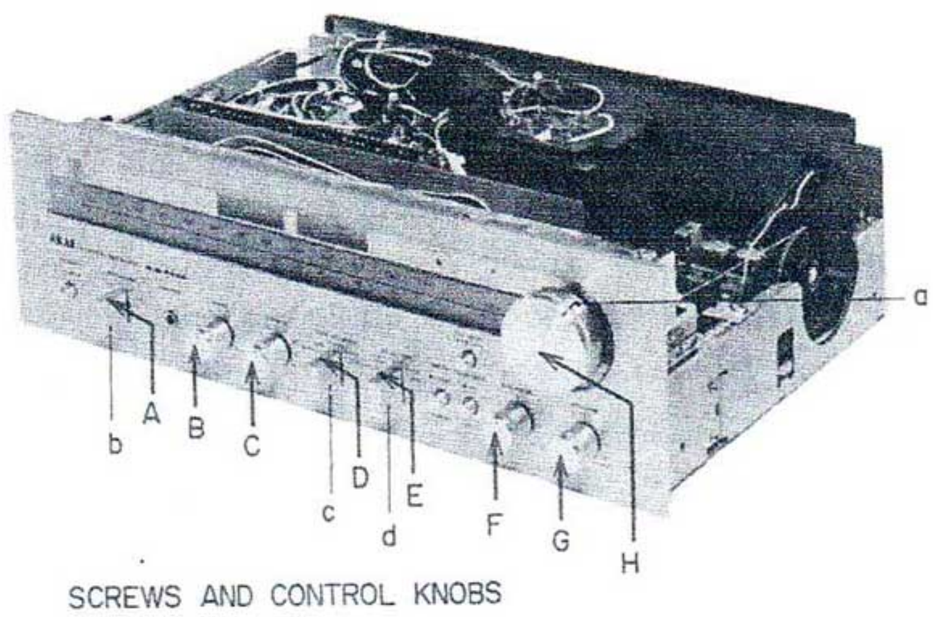

SCREWS AND CONTROL KNOBS

5

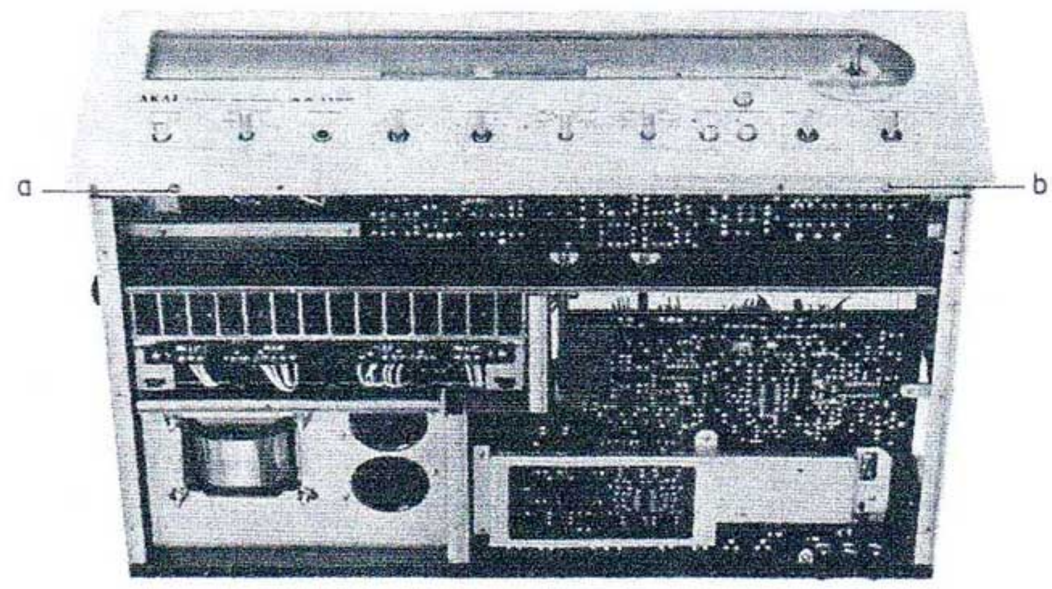

SCREWS

6

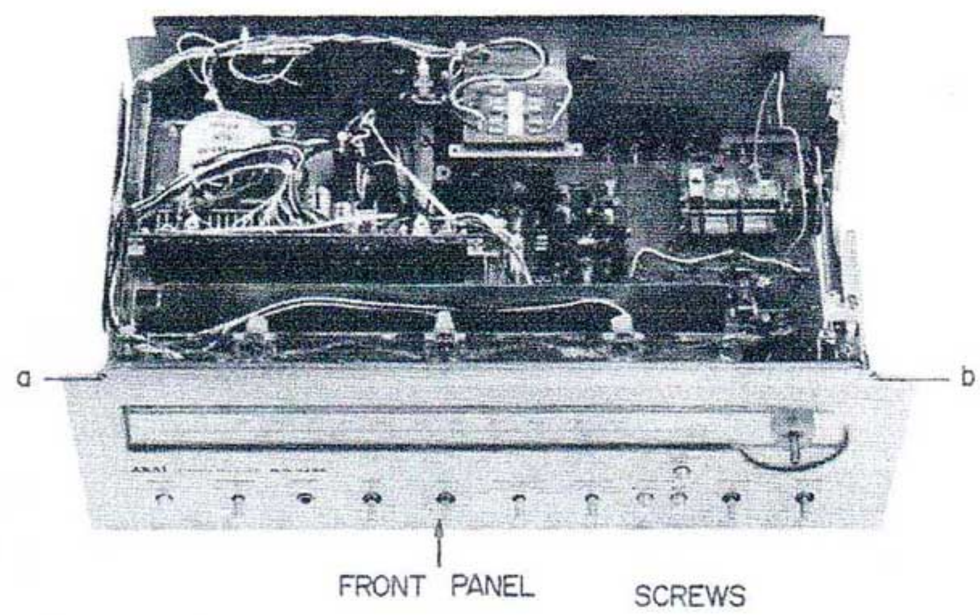

SCREWS

7

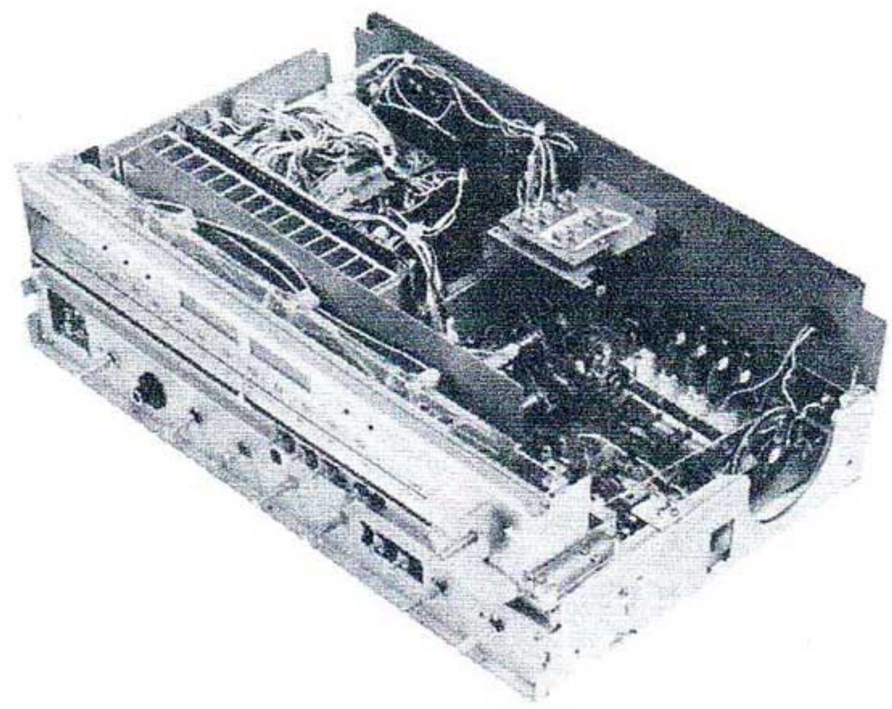

1. MODEL AA-1135

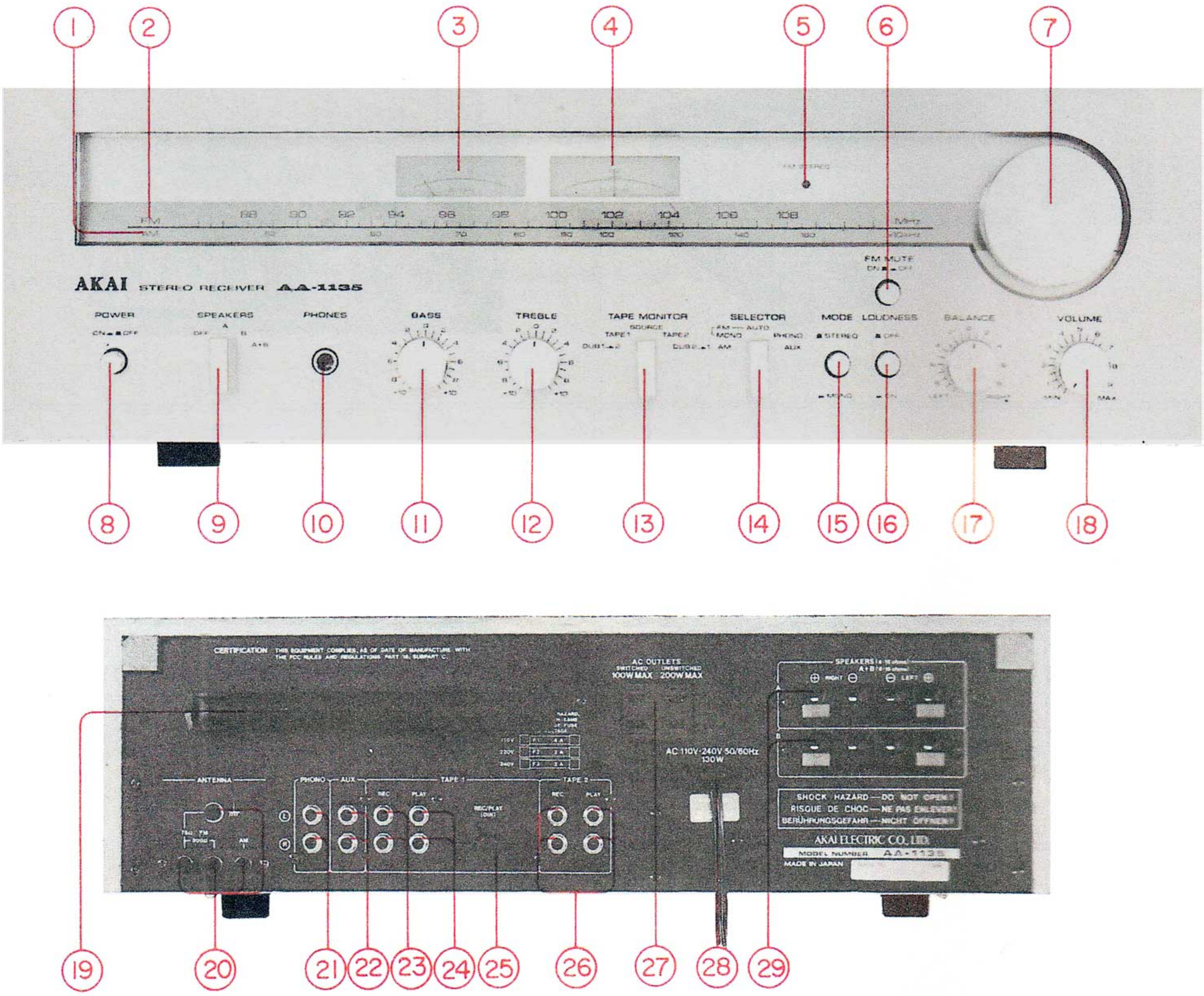

Fig. 1 Controls AA-1135

1. AM DIAL SCALE
2. FM DIAL SCALE
3. SIGNAL STRENGTH METER
4. FM TUNING METER
5. FM STEREO LAMP
6. FM MUTE SWITCH
7. TUNING KNOB
8. POWER SWITCH
9. SPEAKER SYSTEM SELECTOR
10. HEADPHONE JACK
11. BASS CONTROL KNOB
12. TREBLE CONTROL KNOB
13. TAPE MONITOR
14. SOURCE SELECTOR
15. MODE SWITCH
16. LOUDNESS SWITCH
17. STEREO BALANCE CONTROL
18. VOLUME CONTROL
19. AM FERRITE BAR ANTENNA
20. FM AND AM ANTENNA TERMINALS
21. PHONO JACK
22. AUX JACK
23. TAPE 1 SYSTEM REC JACKS
24. TAPE 1 SYSTEM PLAY JACKS
25. TAPE 1 SYSTEM DIN JACK
26. TAPE 2 SYSTEM REC/PLAY JACKS
27. AC OUTLETS (CEE models not equipped with this facility)
28. AC CORD (CEE model is equipped with an AC Inlet instead of an AC cord. Connect with an appropriate power cord)
29. A AND B SYSTEM SPEAKER TERMINALS

2. MODEL AA-1150

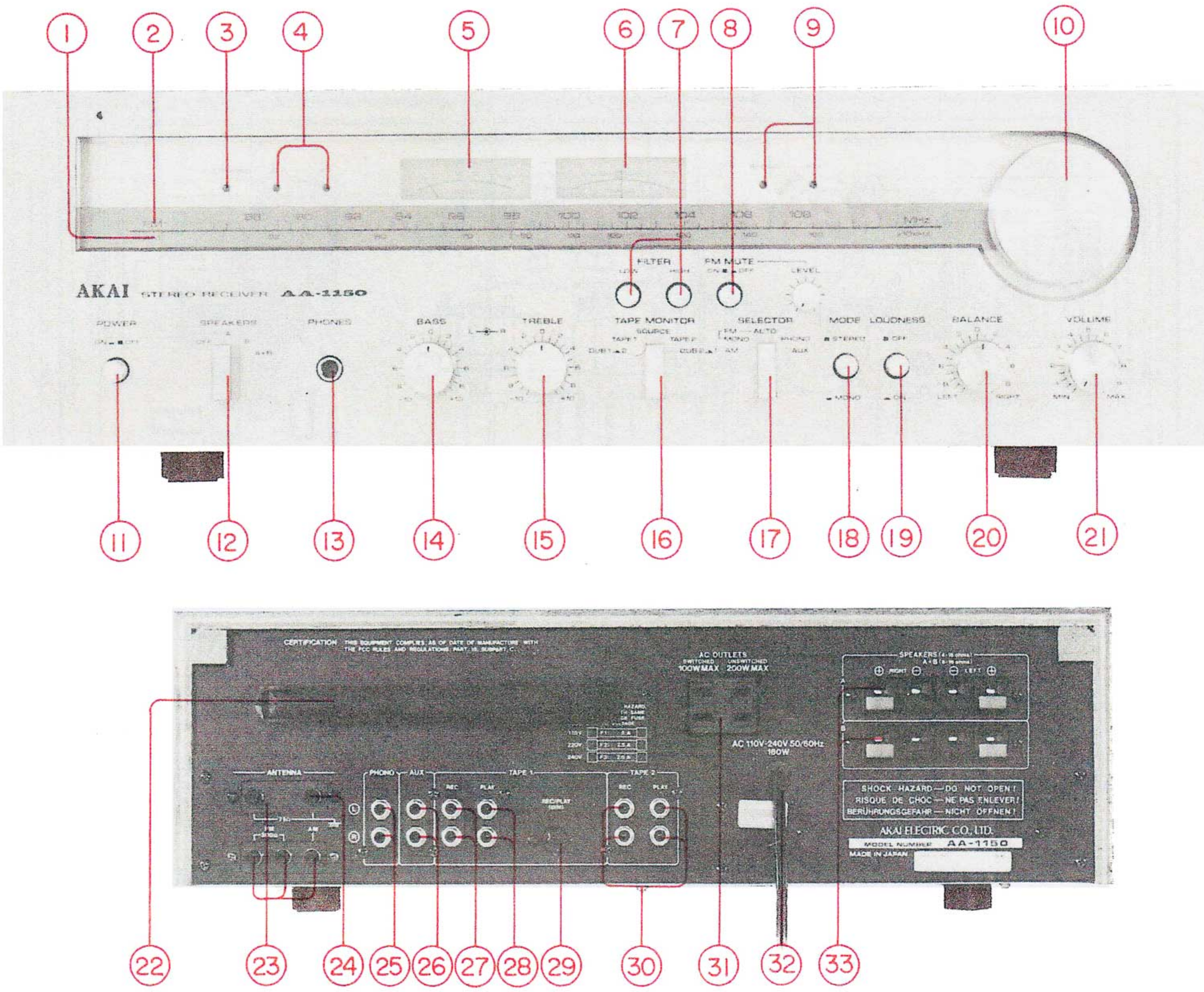

Fig. 2 Controls AA-1150

1. AM DIAL SCALE
2. FM DIAL SCALE
3. FM STEREO INDICATOR LAMP
4. AM AND FM INDICATOR LAMPS
5. SIGNAL STRENGTH METER
6. FM TUNING METER
7. LOW AND HIGH FILTER SWITCH
8. FM MUTE SWITCH AND LEVEL ADJUSTER
9. PHONO AND AUX INDICATOR LAMPS
10. TUNING KNOB
11. POWER SWITCH
12. SPEAKER SYSTEM SELECTOR
13. HEADPHONE JACK
14. BASS CONTROL KNOB (Left and Right)
15. TREBLE CONTROL KNOB (Left and Right)
16. TAPE MONITOR
17. SOURCE SELECTOR
18. MODE SWITCH
19. LOUDNESS SWITCH
20. BALANCE CONTROL
21. VOLUME CONTROL
22. AM FERRITE BAR ANTENNA
23. AM AND FM ANTENNA TERMINALS
24. GROUND TERMINAL
25. PHONO JACK
26. AUX JACK
27. TAPE 1 SYSTEM REC JACKS
28. TAPE 1 SYSTEM PLAY JACKS
29. TAPE 1 SYSTEM DIN JACK
30. TAPE 2 SYSTEM REC/PLAY JACKS
31. AC OUTLETS (CEE models not equipped with this facility)
32. AC CORD (CEE models is equipped with an AC Inlet instead of an AC cord. Connect with an appropriate power cord.)
33. 'A AND B SYSTEM SPEAKER TERMINALS

www.hifiengine.com

1. MODEL AA-1135

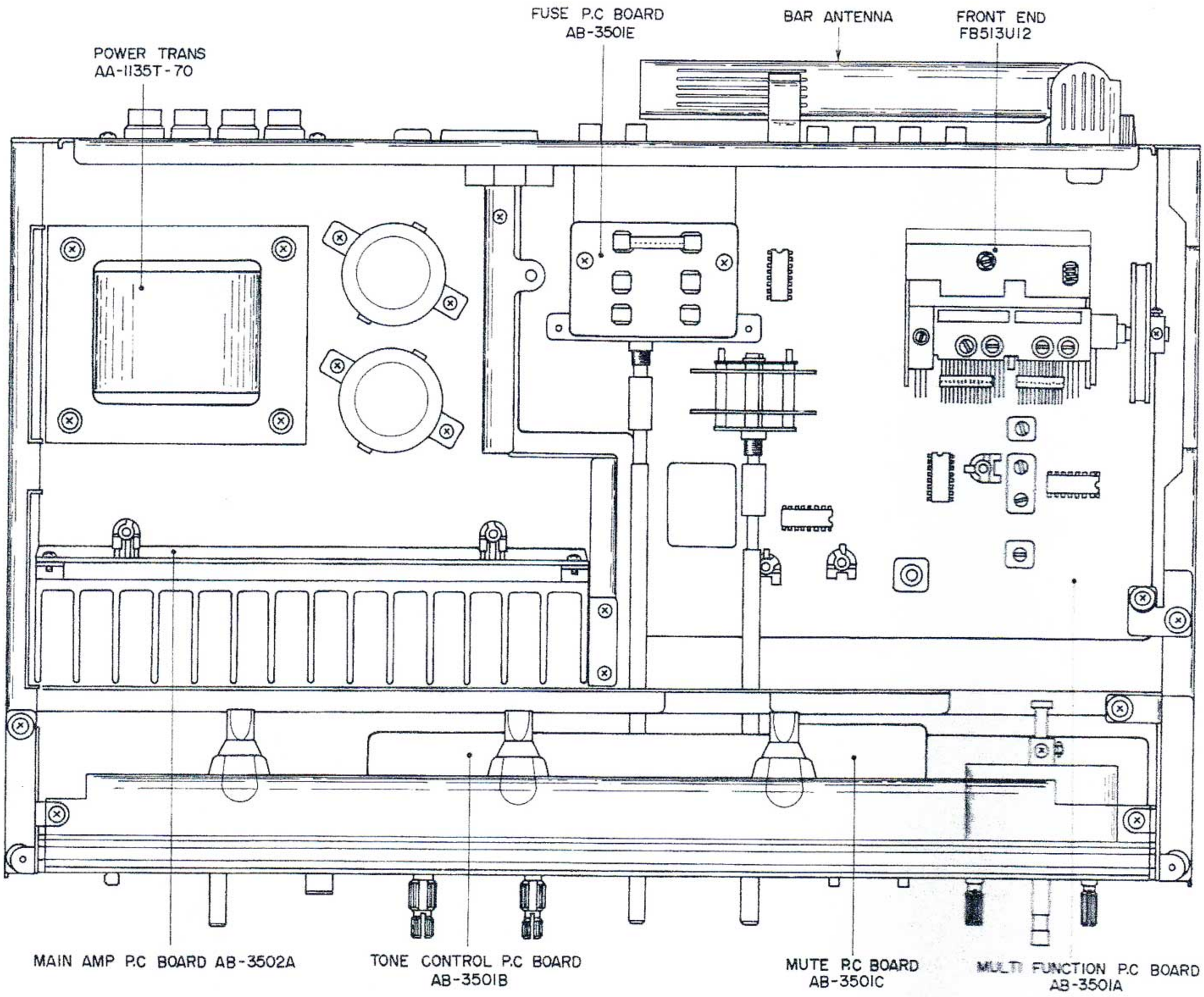

Fig. 3 Top View (AA-1135)

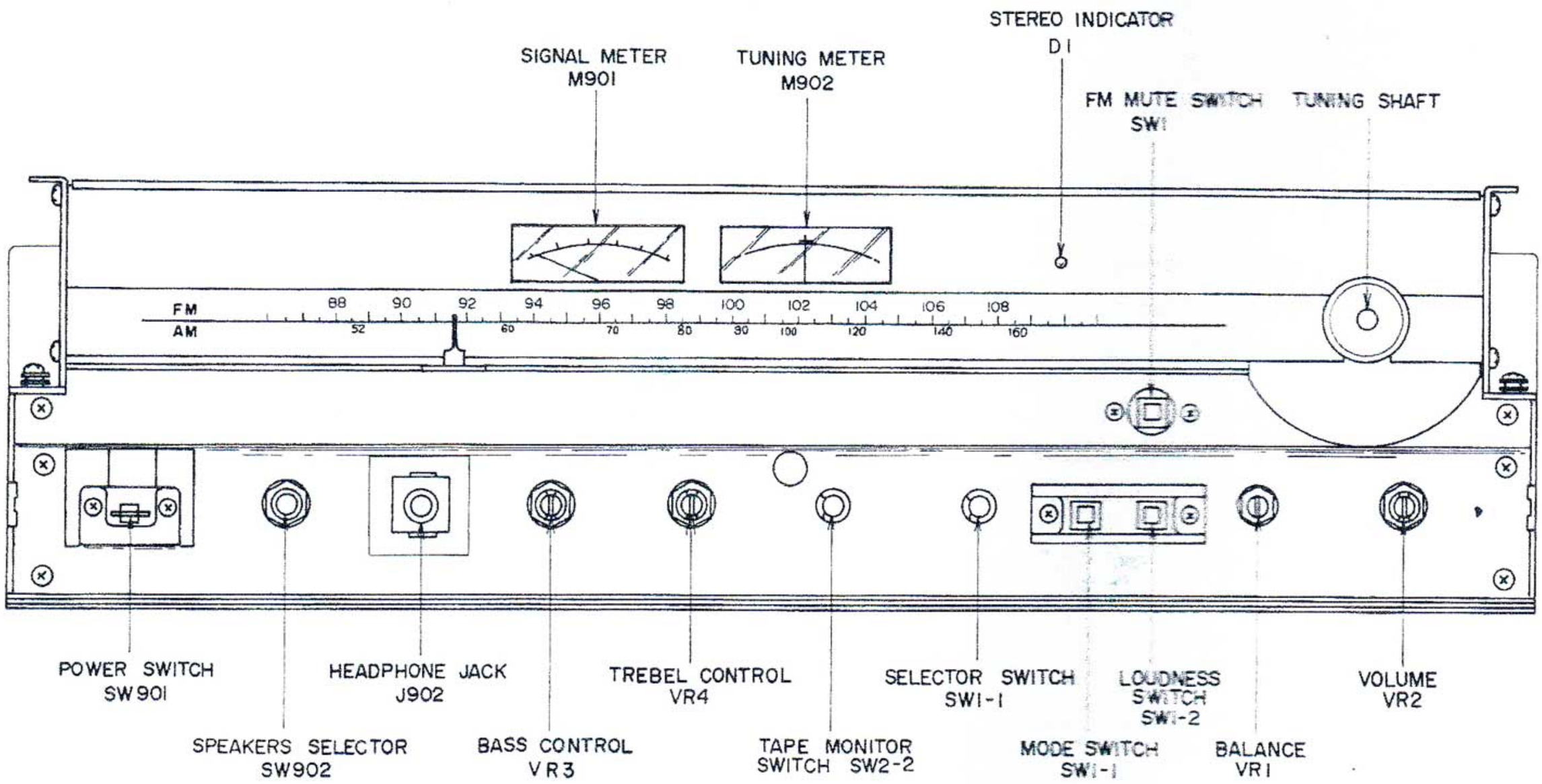

Fig. 4 Front View (AA-1135)

2. MODEL AA-1150

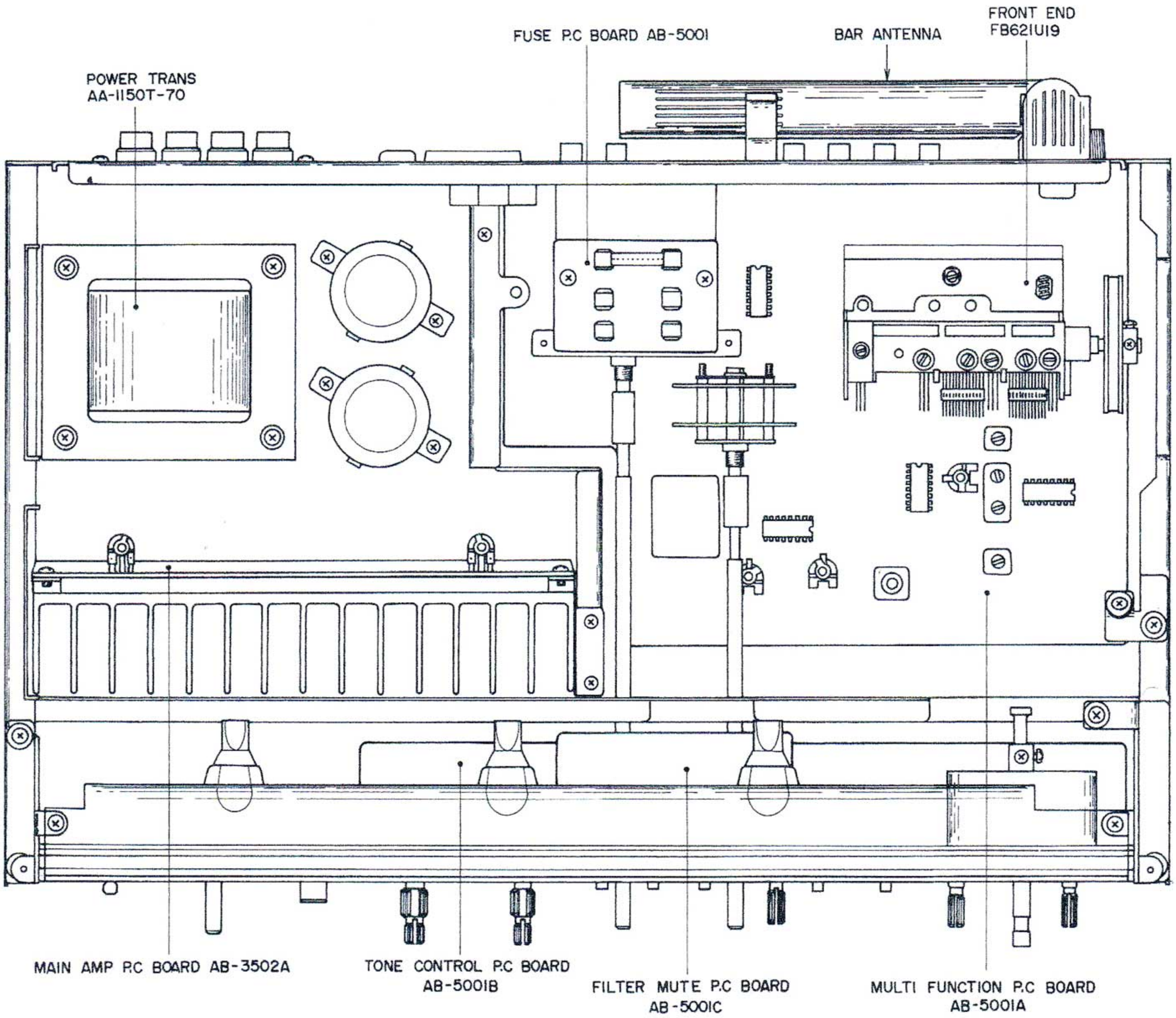

Fig. 5 Top View (AA-1150)

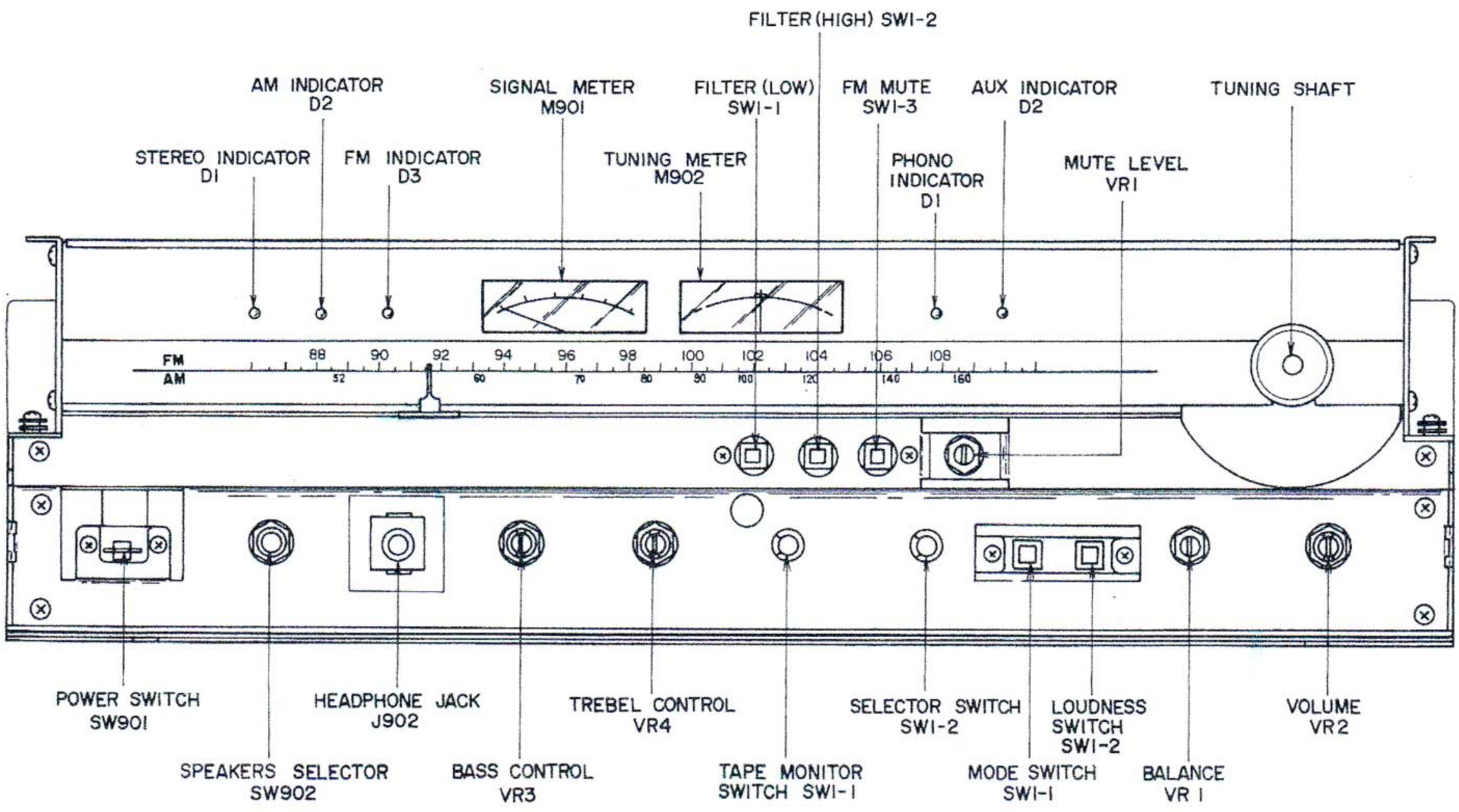

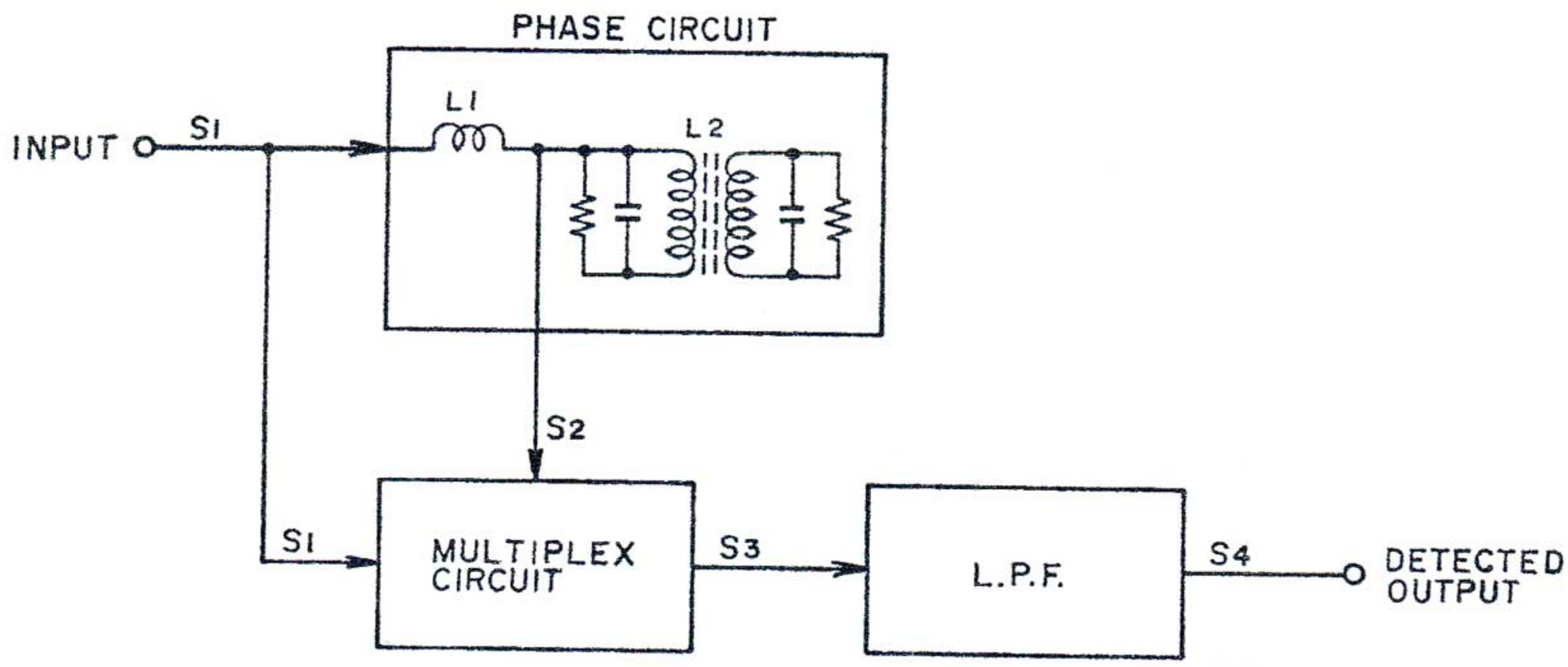

Fig. 7 Quadrature Detection Block Diagram

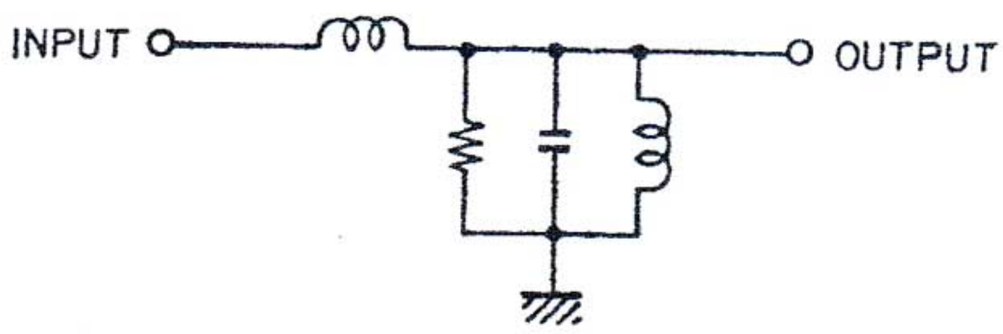

Fig. 8 Single Tuning Type

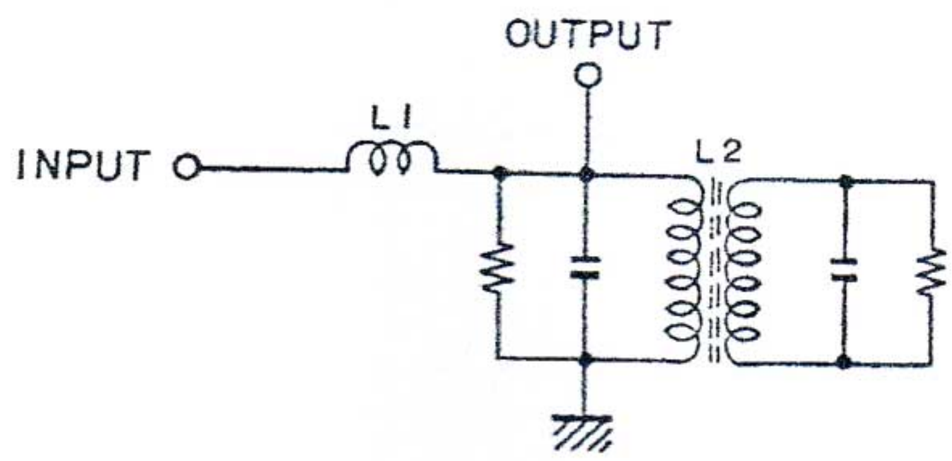

Fig. 9 Double Tuning Type

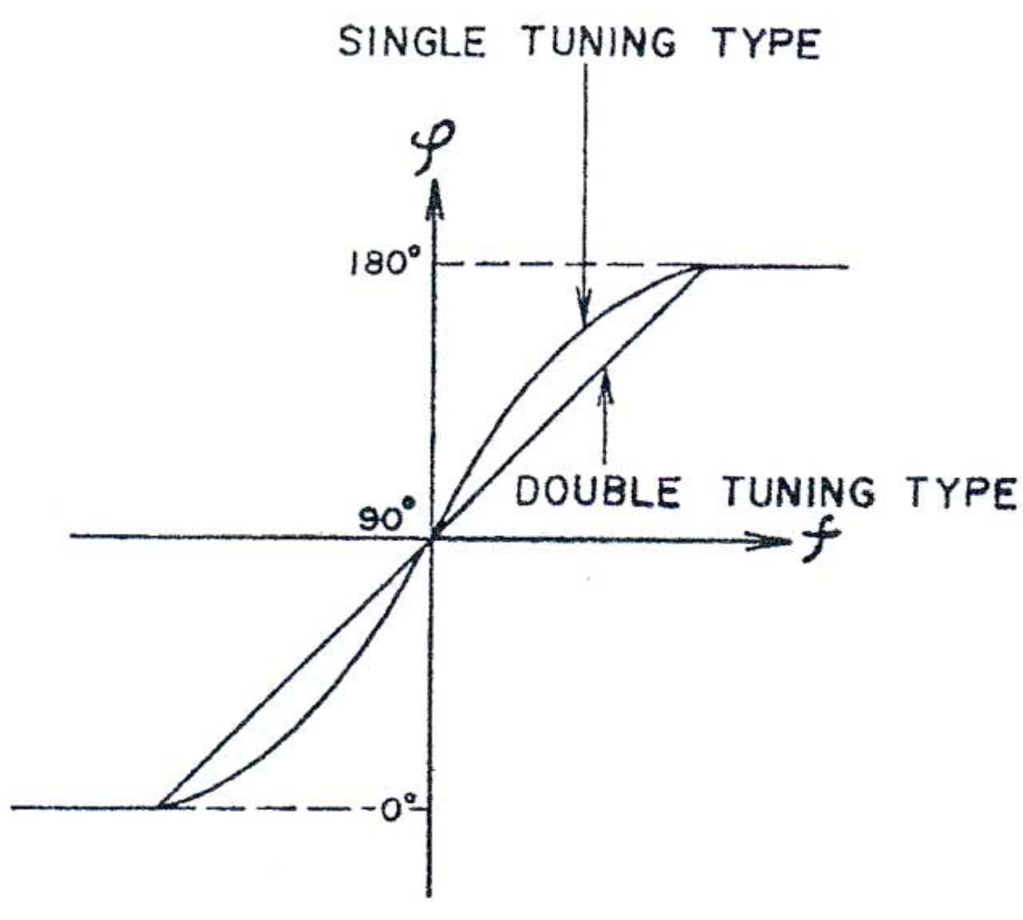

Fig. 10 Tuning Curve

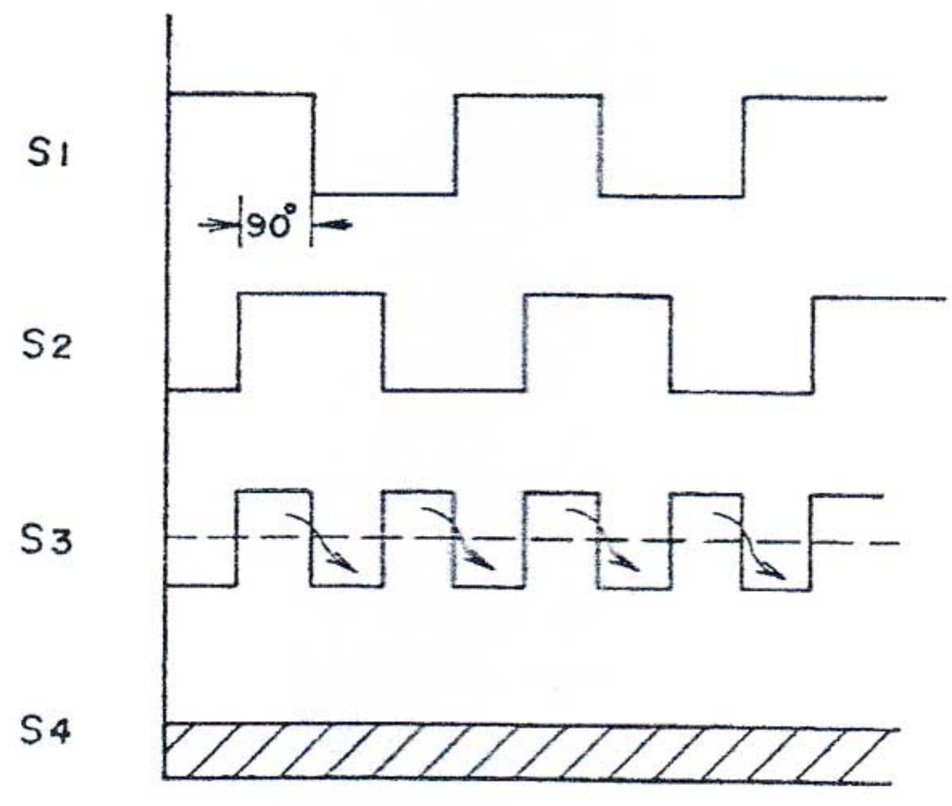

Fig. 11 Output at Non-modulation

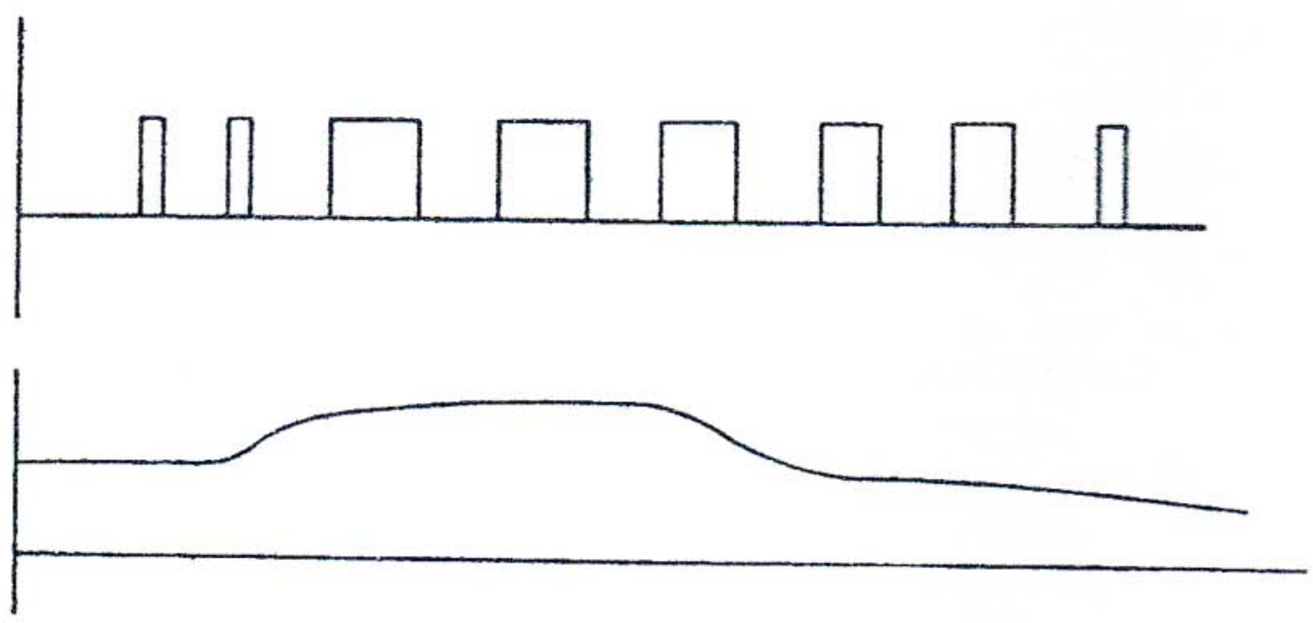

Fig. 12 Output at Modulation Time

The Quadrature Detection Circuit is comprised of a Phase Circuit, a Multiplier Circuit and a Low Pass Filter (L.P.F.) as shown in Fig. 7.

There are two types of Phase Circuits, the Single tuning type shown in Fig. 8 and the Double tuning type shown in Fig. 9. However, because with the double tuning type there is less frequency deviation in relation to carrier frequency, linearity is improved as shown in Fig. 10 and phase distortion is reduced this type phase circuit is employed in the AA-1135 and AA-1150.

Input signal S1 in divided into the part which enters the direct multiplier circuit and the part which passes the phase circuit and enters the multiplier circuit. The signal supplied to the phase circuit is always 90° phase delayed at L1. Also because at Non-modulation time, L2 is tuned to 10.7 MHz, if modulation is applied and S1 is changed from 10.7 MHz, phase deviation at L2 will take place proportionately in relation to this changed part and this becomes S2 signal which is delayed in relation to S1.

At Non-modulation, because as shown in Fig. 11 input signal S1 and 90° phase delayed (by means of L1) signal S2 are switched by means of the multiplier circuit, the output signal becomes S3. Because this S3 passses the low pass filter and becomes S4 fixed direct current, the detector output is zero. Then, when modulation is applied, because the switched output is varied according to the degree of modulation, and the output which passed the low pass filter becomes the pulsating current part as shown in Fig. 12 detector output is obtained.

www.hifiengine.com

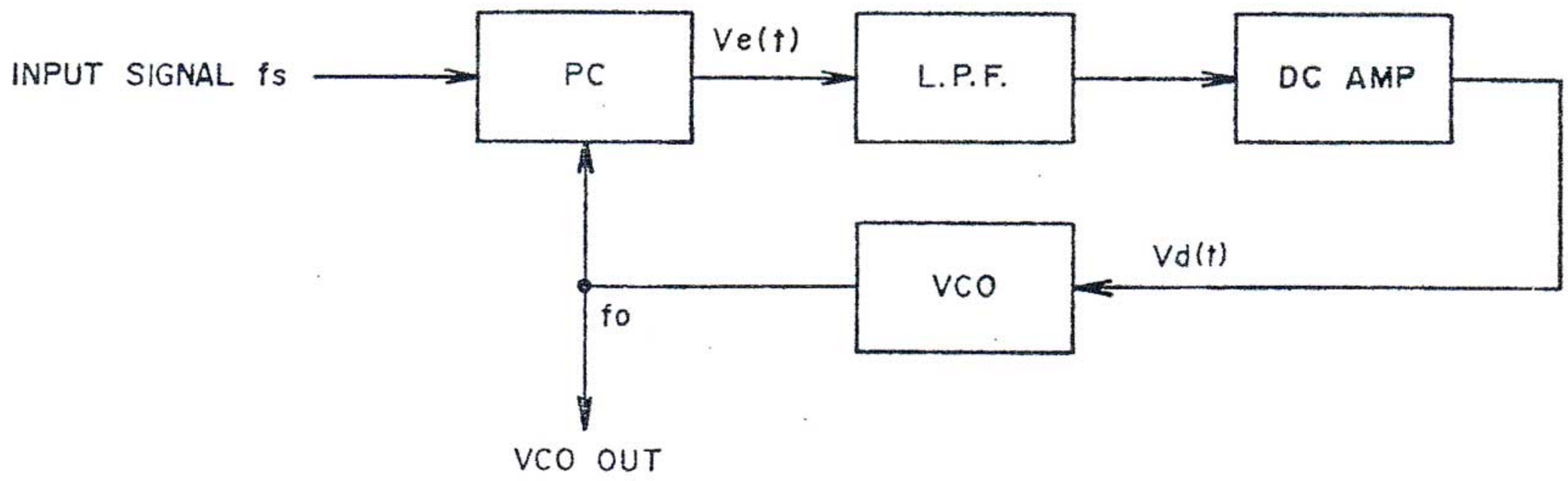

Fig. 13 PLL Circuit

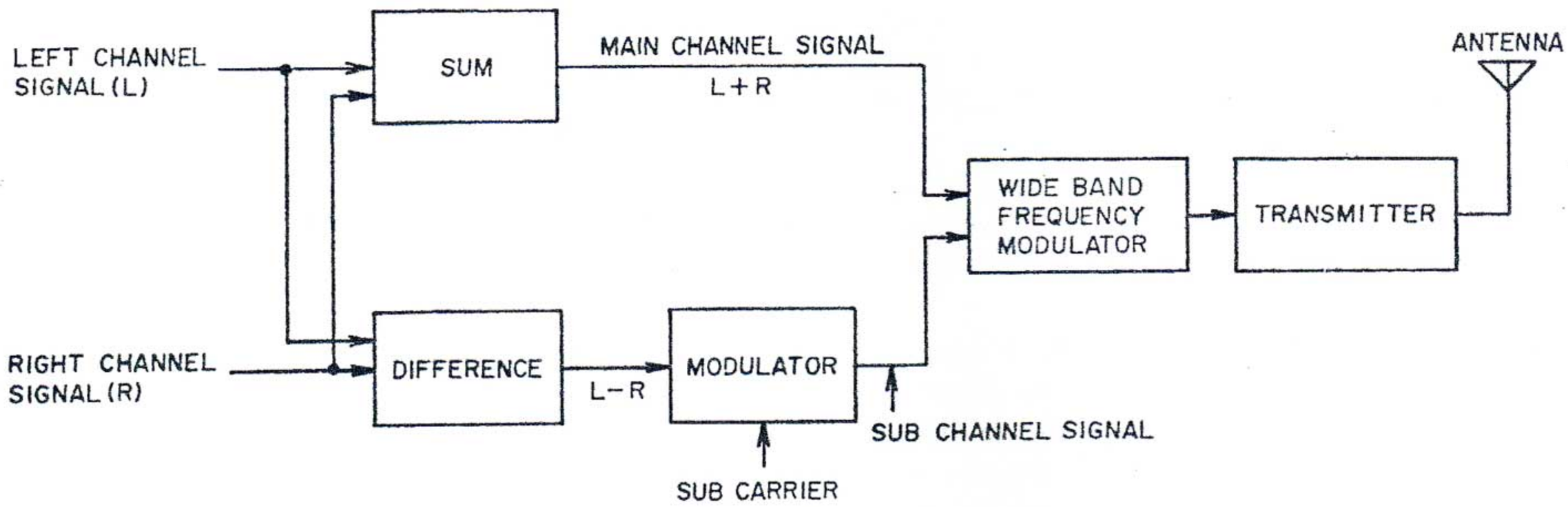

Fig. 14 FM Broadcasting System Diagram

To separate FM stereo broadcast signal received to data into left and right signals, a 19 kHz pilot signal was successively multiplied to form a 38 kHz signal and stereo separation was effected from this. However, with this multiplier system, change in coils due to wear occurred and adjustment points were numerous, etc. Therefore, this model employs a newly developed PLL circuit which produces an exceedingly accurate 38 kHz switching signal.

1. PLL CIRCUIT OPERATION

PLL circuit is a king of feedback circuit and is comprised of a Phase Comparator (PC), a Low Pass Filter (LPF), a Direct Current Amplifier (DC Amp), and a Voltage Control Oscillator (VCO) as shown in Fig. 13.

The PC compares input signal Fs and VCO oscillator output and generates the difference in signal voltage Ve(t) proportionately to this phase deviation. This Ve(t) passes LPF and the DC Amp and becomes control voltage. This control voltage supplied to VCO and VCO oscillation frequency is DC controlled. When there is no input signal Fs, because there is also no Ve(t), control voltage Vd(t) becomes zero, and VCO maintains a *free-running oscillation frequency. When a signal enters, VCO oscillation frequency fo is controlled to narrow the difference between Fs by means of feedback as described above, and the PLL circuit assumes a synchronous condition. This is referred to as input signal lock. (In case the difference between Fo and Fs is too large, the differential signal frequency becomes high and is reduced at the LPF. However, because the VCO control voltage does not change, PLL will not stay within the *lock range).

Because of the ability of the signal interference removing LPF to accumulate the previous voltage in case the PLL deviates from within the lock range due to certain interference, the original condition is quickly reinstated.

* Free running frequency:
  Oscillating frequency when there is no input signal.
* Lock range:
  At the condition in which the VCO oscillation frequency is locked to the input signal, the lock range is the oscillating frequency in which when the input signal changes, the PLL maintains it's input signal lock condition. Accordingly, in case Fs is changed inside the PLL lock range, VCO oscillation frequency always follows this, and a no frequency deviation and no phase difference signal is obtained. In other words, VCO oscillation frequency can be locked to Fs.

2. STEREO DEMODULATION CIRCUIT

As shown in Fig. 14 for FM broadcasts, the sum signal (L+R) consists of left signal (L) and right signal (R) and the audio frequency band of this signal in its original form is frequency modulated. On the other hand, the difference signal of both (L–R) is changed to high frequency through the use of the sub carrier, and is referred to as the sub channel signal. The carrier is further frequency modulated and sent to the FM stereo transmitter.

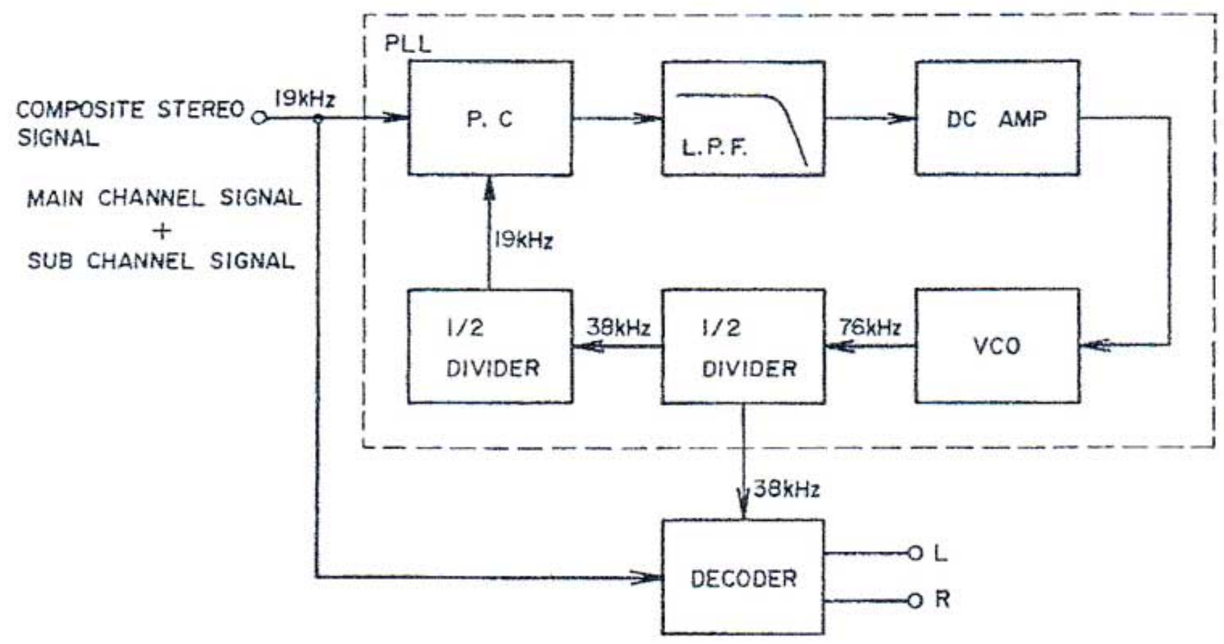

Fig. 15 MPX IC Function

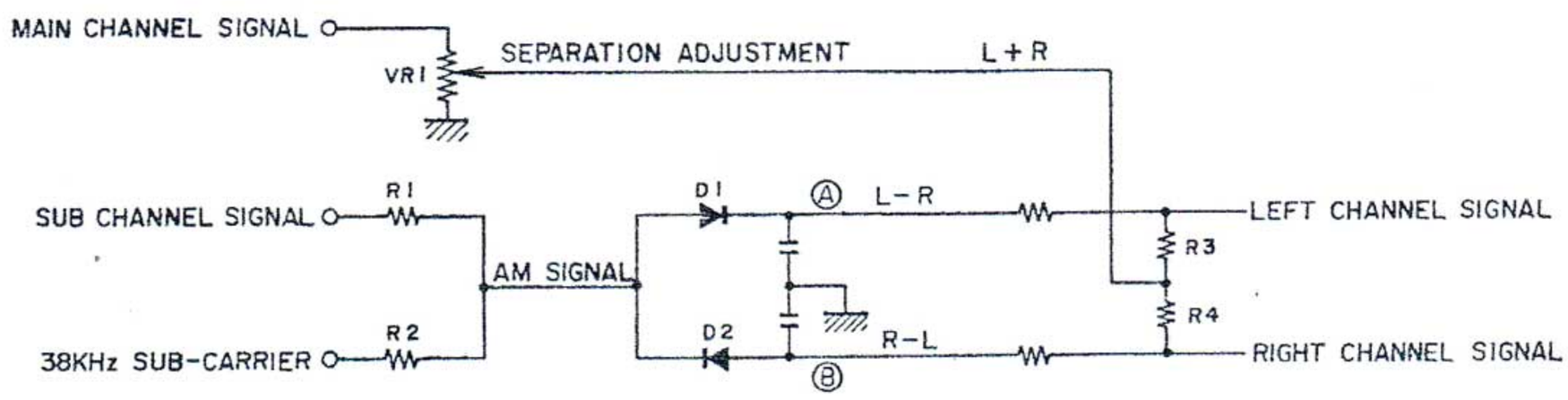

Fig. 16 Multiplex Decoder

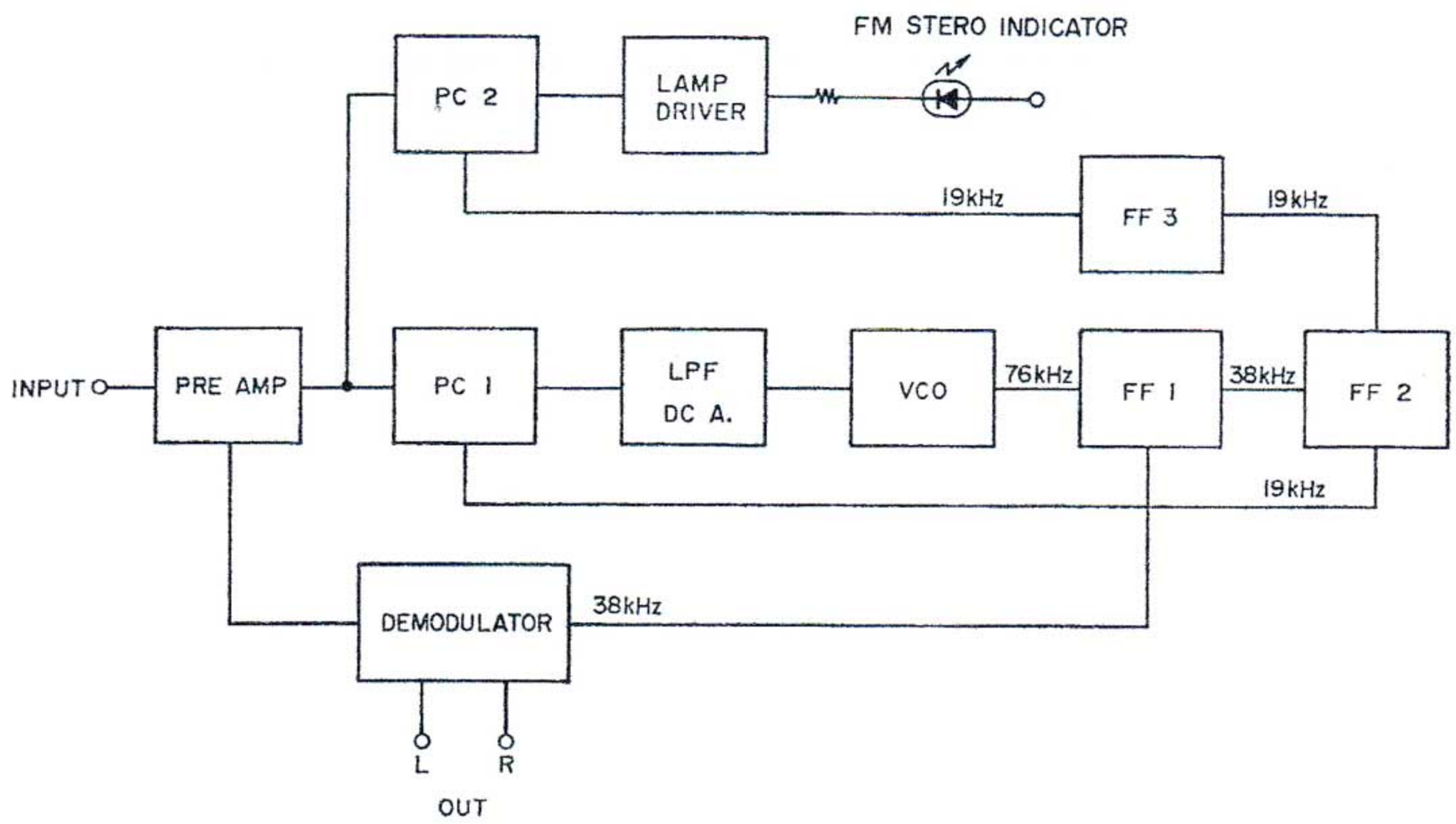

Fig. 17 LA-3350 Function System Diagram

Accordingly, for composite stereo signal demodulation, the sub carrier used for demodulation at the transmitter must be the same uniform 38 kHz signal as the frequency and phase. If the 38 kHz waveform is asymmetrical, channel separation will become poor. At the PLL employed MPX stereo demodulator circuit, as shown in Fig. 13 first a 76 kHz signal is oscillated and when this passes the divider, a symmetrical 38 kHz signal is obtained. This 38 kHz sub carrier is supplied to the multiplex decoder together with the sub channel of the composite stereo signal. At the multiplex decoder, left and right channel audio signals are separated in order as shown in Fig. 16.

The 38 kHz sub carrier composited with the sub removed when sub channel signal and sub carrier passed R1, R2 produces the regular AM wave. Then, because this envelope is detected by mutually reverse polarity connected diodes D1 and D2, L–R signal is emitted at point Ⓐ and R–L signal at point Ⓑ.

Also, because main channel signal (L+R) is supplied to R3, R4 center point, ⒶⒷpoint voltage is added and subtracted and becomes

(L+R) + (L–R) = 2L (left channel)

(L+R) + (R–L) = 2R (right channel)

The level of the main channel signal (L+R) can be adjusted by means of variable resistor VR (VR1) for optimum separation. Thus, the function of actually employed PLL IC LA-3350 is a shown in

1. MODEL AA-1135

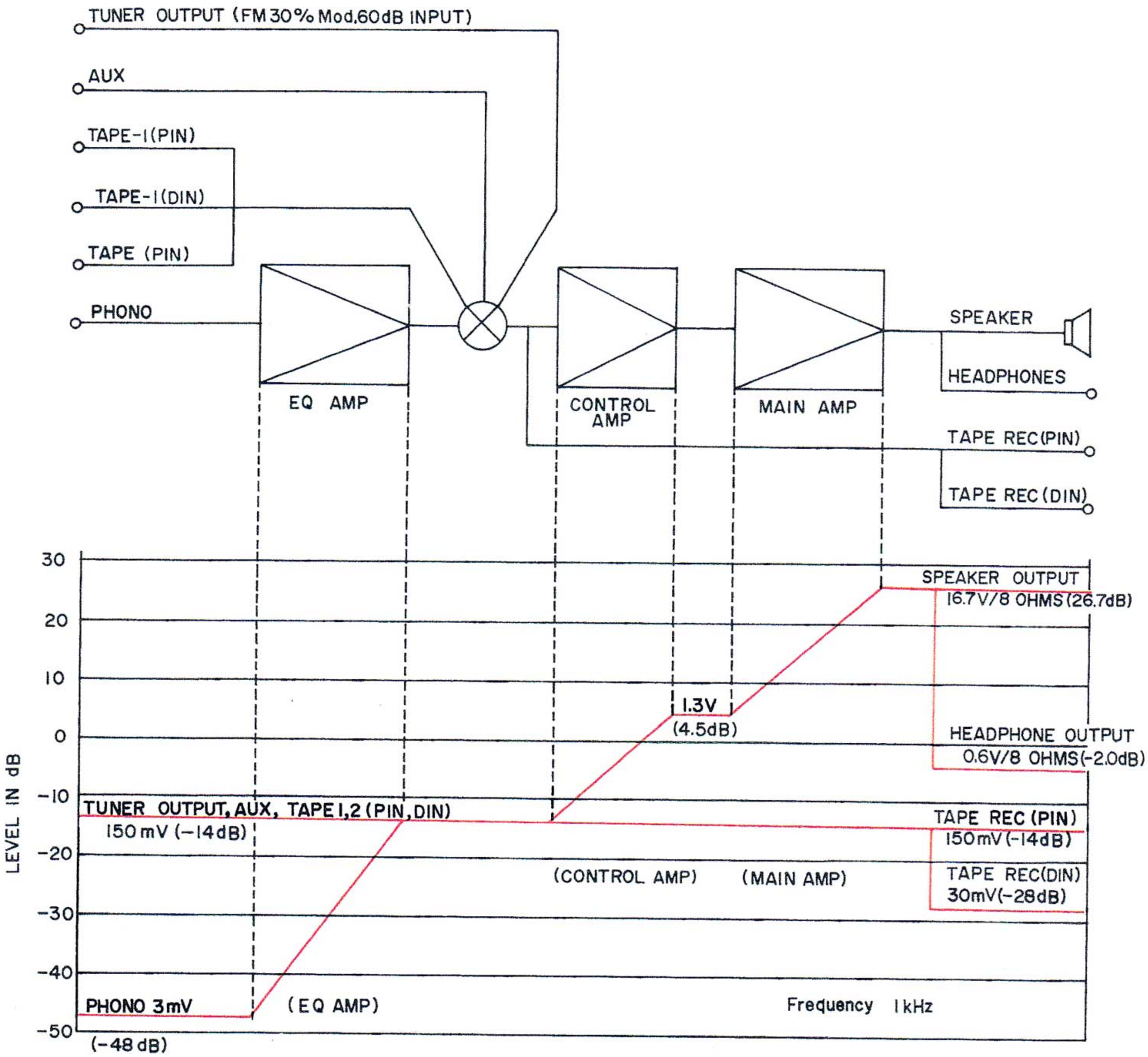

Fig. 18 Level Diagram of Model AA-1135

2. MODEL AA-1150

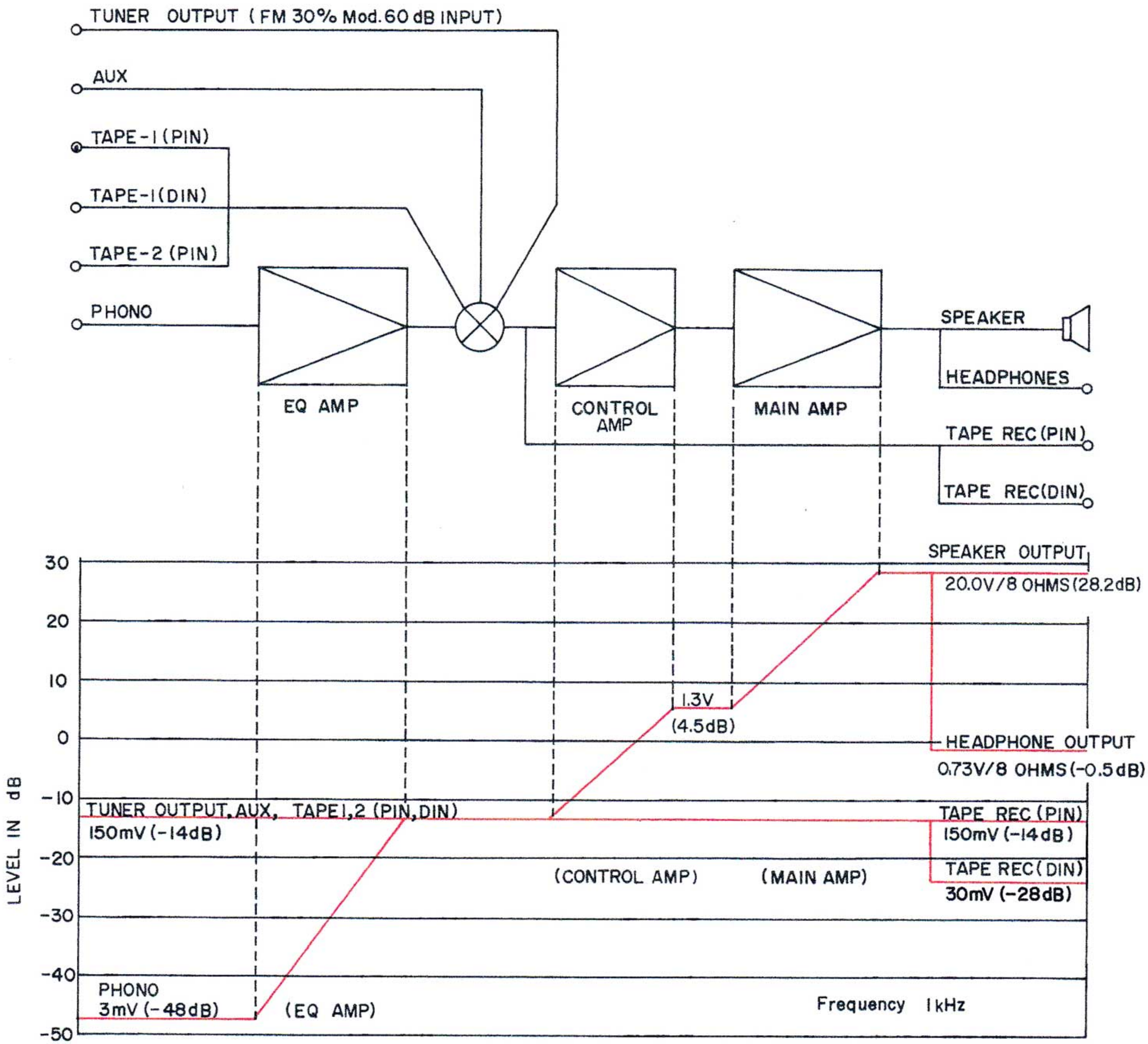

Fig. 19 Level Diagram of Model AA-1150

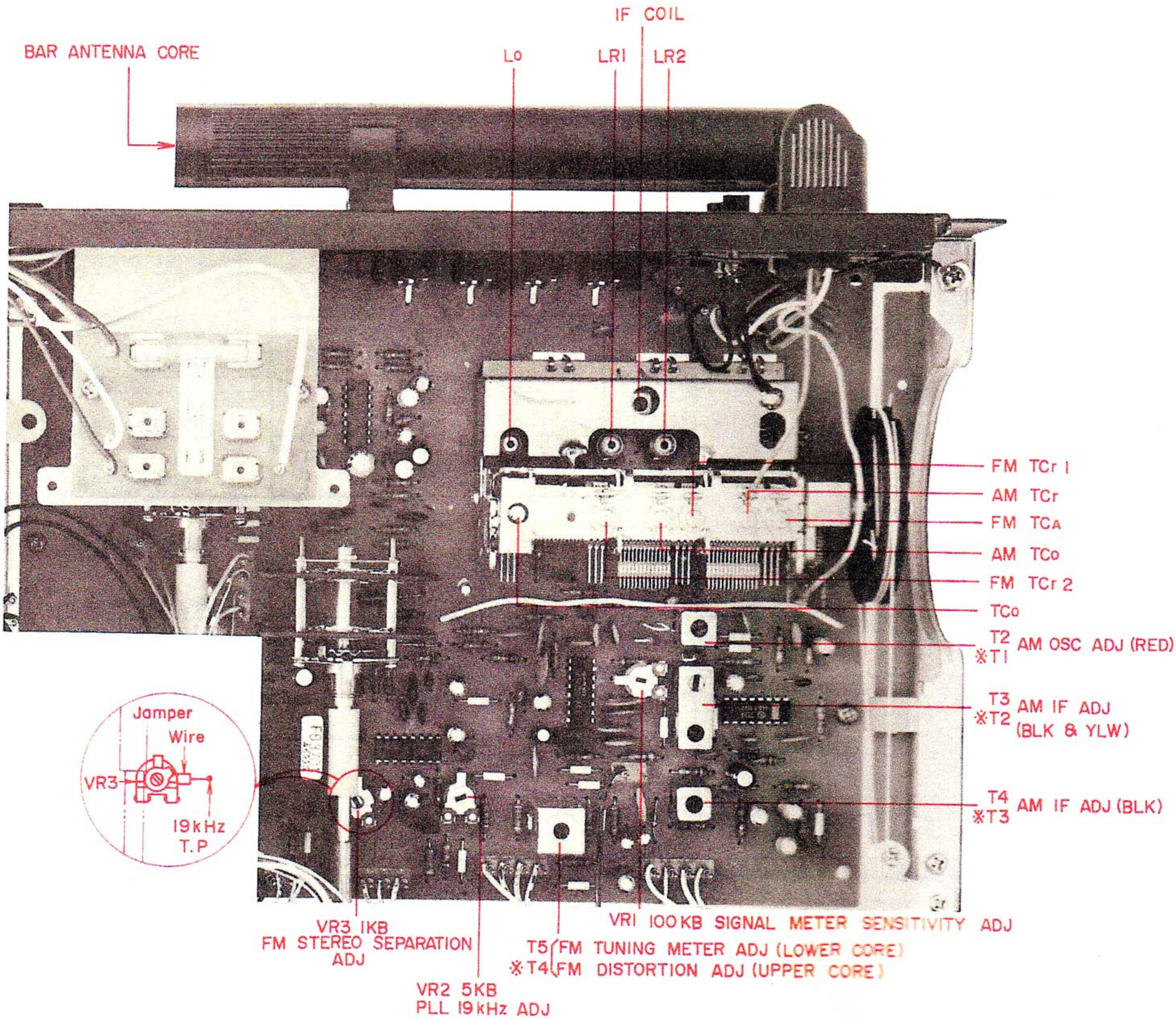

Fig. 20 Multi Function P.C Board AB-3501A (AA-1135)
AB-5001A (AA-1150)

Notes; 1. Schematic Numbers of AA-1135 indicated by * mark.
2. Please refer to Fig. 21 for Front End of AA-1135.

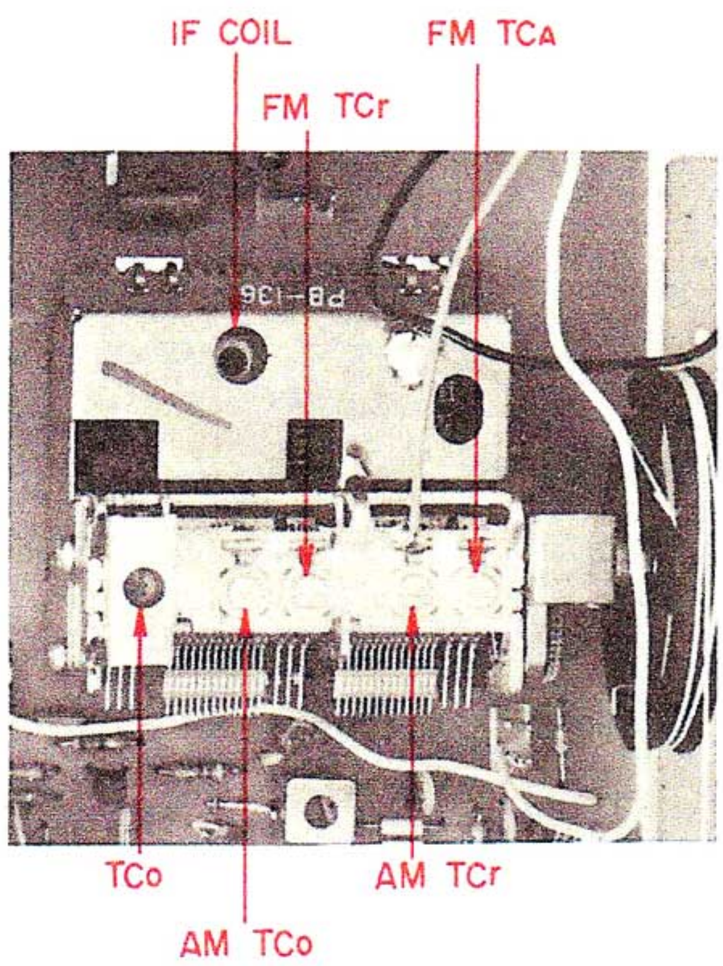

Fig. 21 Front End (AA-1135)

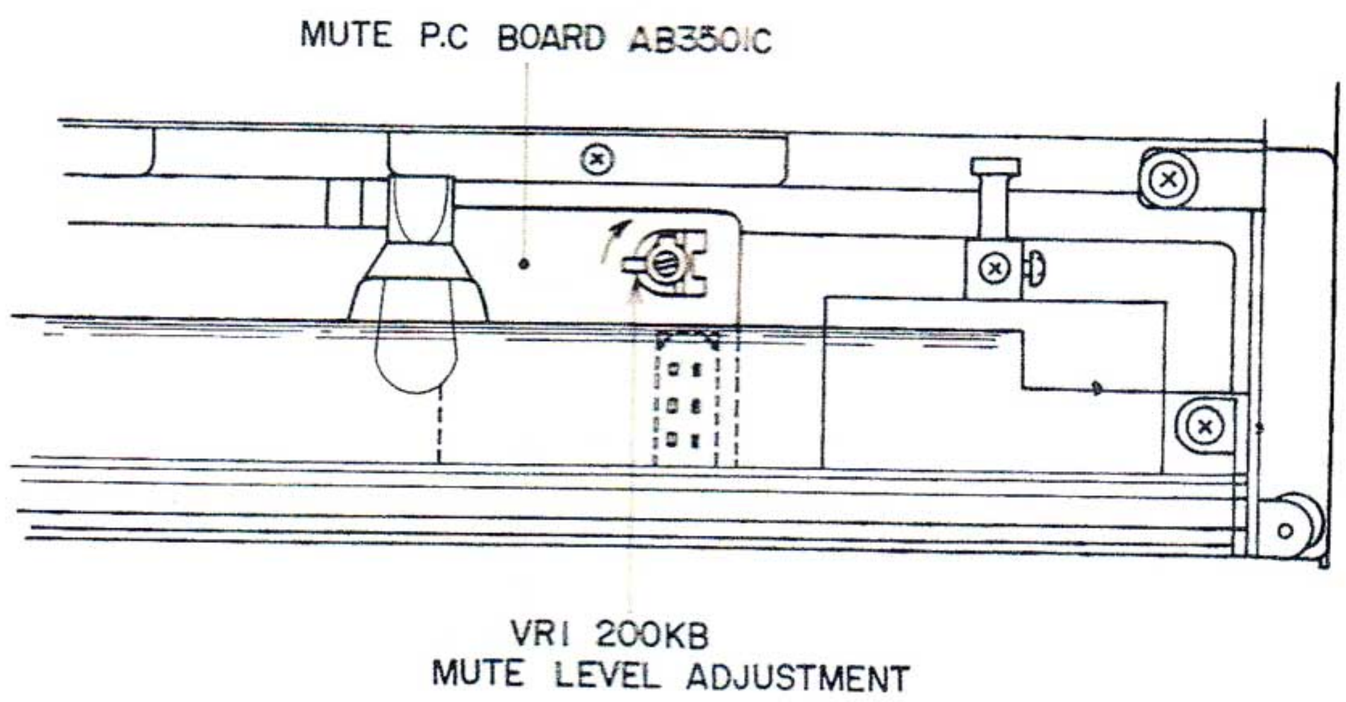

Fig. 22 Mute Level Adjustment (Only AA-1135)

1. FM TUNER SECTION ADJUSTMENT (Refer to Fig. 20, 21 and 22)

Step	Adjustment Item	Adjustment Point	Result	Remarks
1	Front End IF Coil	IF Coil (Front End)	Maximum Noise Level	Selector to FM. FM Mute to OFF. Tune only noise without interference of broadcasting.
2	Tuning Meter Centering	T5 *T4 Lower Side core (Multi Function P.C Board)	Center Tuning Meter Indication	Same as above
3	Distortion Factor	T5 *T4 Upper Side core (Multi Function P.C Board)	Less than 0.15% *0.2% Distortion Factor	98 MHz, 60 dB (mono) input. Less than 0.15% *0.2% on both channels.
4	Confirmation of Tuning Meter Indication			If Tuning Meter Indication is not at center position, re-adjust STEP 2 and 3 above.
5	High Range Frequency Coverage	TCo (Front End)	error: within ±300 kHz	108 MHz, 60 dB (mono) input.
6	Low Range Frequency Coverage	Lo (Front End)	error: within ±300 kHz	88 MHz, 60 dB (mono) input. (only AA-1150)
7	High Range Sensitivity	FM TCr, FM TCA (Front End)	Less than 3% Distortion Factor	FM Mute to OFF. 108 MHz, Less than 10 dB, *12 dB (mono) input.
8	Low Range Sensitivity	LR1, LR2 (Front End)	Less than 3% Distortion Factor	FM Mute to OFF. 88 MHz, Less than 10 dB (mono) input. (For AA-1135: confirmation only)
9	Mid Range Sensitivity Confirmation		Less than 3% Distortion Factor	FM Mute to OFF. 98 MHz, Less than 10 dB, *12 dB (mono) input.
10	Mute Level	VR1 200 kB (Mute P.C Board)	No signal emitted from output	FM Mute to OFF. 88 MHz, 20 dB (mono) input. (Refer to Fig. 22) (only AA-1135)
11	PLL IC Free Running Frequency	VR2 5 kB (Multi Function P.C Board)	19.00 kHz	Frequency Counter to Test Point (Multi Function P.C Board) See NOTE 3.
12	Stereo Indicator Lighting Confirmation			98 MHz, 60 dB (stereo) input. No lighting of stereo indicator indicates no stereo separation.
13	Stereo Separation	VR 3 1 kB (Multi Function P.C Board)	More than 42 dB, *40 dB (1 kHz)	98 MHz, 60 dB (stereo) L ch input. Distortion Factor must be less than 0.3%, *0.4%.

www.hifiengine.com

Step	Adjustment Item	Adjustment Point	Result	Remarks
14	Stereo Separation		More than 42 dB, *40 dB (1 kHz)	98 MHz, 60 dB (stereo) R ch input. Distortion Factor must be less than 0.3%, *0.4%. If it exceeds 0.3% *0.4% adjust the coil in STEP 1 within 1/2 turn.
15	Signal Meter Sensitivity	VR1 100 kB (Multi Function P.C Board)	Indicator at "5".	98 MHz, 100 dB (mono) input.

Chart 1

NOTES: 1. AA-1135 specifications are indicated by * marks.
2. When the distortion factor of less than 3% cannot be obtained at Step 9, repeat Front End IF Coil and Step 7 through 9 adjustments several times.
3. Free Running Frequency of the PLL IC must be an exact 19.00 kHz.

2. AM TUNER SECTION ADJUSTMENT (Refer to Fig. 20 and 21)

Step	Adjustment Item	Adjustment Point	Result	Remarks
1	Low Range Scale Indication	T2 *T1 (RED) (Multi Function P.C Board)	Maximum Output	Selector to AM. 520 kHz 50 dB input. Tuning Indicator to 520 kHz. Error within 2%.
2	Low Range Sensitivity	T3 *2 (BLK and YLW) T4 *T3 (BLK) (Multi Function P.C Board) Bar Antenna Core (Rear Panel)	Maximum Output Minimum Distortion Factor	520 kHz, 50 dB input. Less than 10% Distortion Factor.
3	High Range Scale Indication	AM TCo (Front End)	Maximum Output	1,400 kHz, 50 dB input. Tuning Indicator to 1,400 kHz. Error within 2%.
4	High Range Sensitivity	AM TCr (Front End)	Maximum Output Minimum Distortion Factor	1,400 kHz, 50 dB input. Less than 10% Distortion Factor.

Chart 2

NOTES: 1. AA-1135 specifications are indicated by * mark.
2. For best results, repeat Steps 1 through 4 two or three times.

www.hifiengine.com

IX. MAIN AMPLIFIER ADJUSTMENT

MODEL AA-1135 and AA-1150

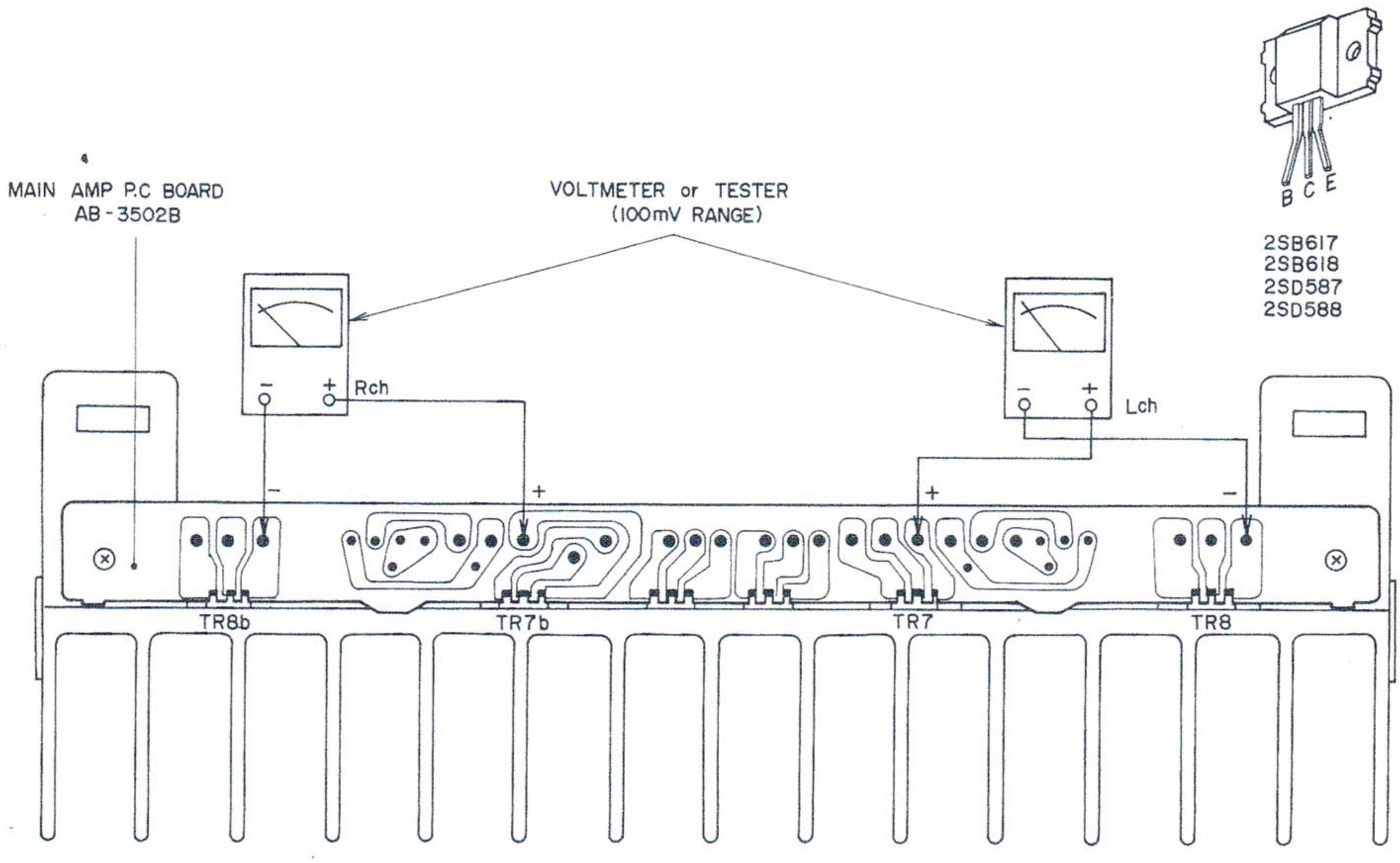

Fig. 23 Instrument Connection

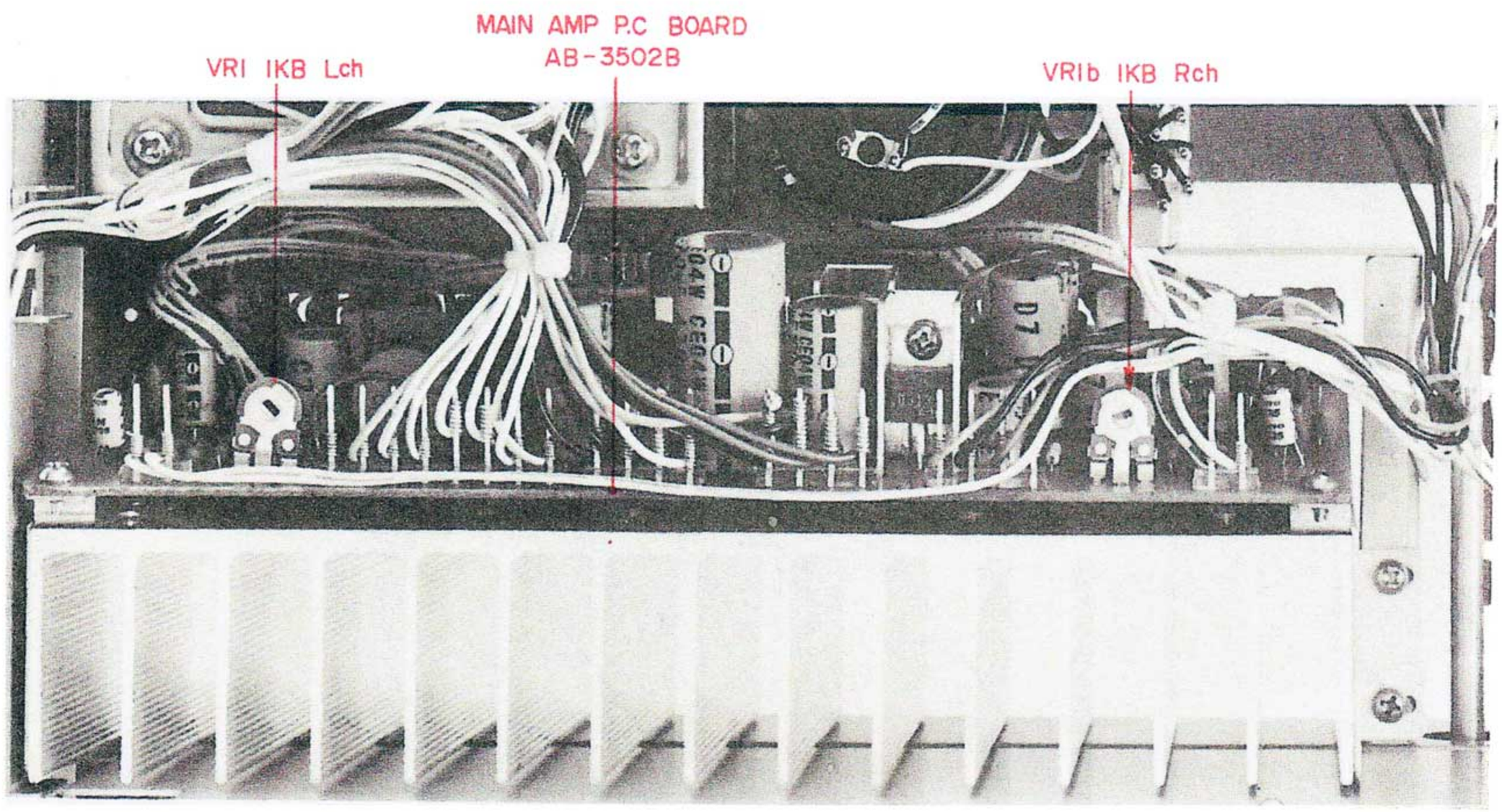

Fig. 24 Adjustment Point

Step	Adjustment Item	Adjustment Point	Result	Remarks
1	Idling Current (Left channel)	VR1 1 kB (Main Amp P.C Board)	25 mV	Use a Voltmeter or Tester with DC 100 mV range.
2	Idling Current (Right channel)	VR1b 1 kB (Main Amp P.C Board)	25 mV	

Chart 3

2) MAIN AMP (A/B) P.C BOARD AB-3502A/B (2ED) & FUSE P.C BOARD AB-3501E

WARNING: ⚠INDICATES SAFETY CRITICAL COMPONENTS. FOR CONTINUED SAFETY, REPLACE SAFETY CRITICAL COMPONENTS ONLY WITH MANUFACTURER'S RECOMMENDED PARTS

AVERTISSEMENT: ⚠IL INDIQU LES COMPOSANTS CRITIQUES DE SÛRETÉ. POUR MAINTENIR LE DEGRÉ DE SÉCURITÉ DE L'APPAREIL NE REMPLACER LES CONPOSANTS DONT LE FONCTIONNEMENT EST CRITIQUE POUR LA SÉCURITÉ QUE PAR DES PIÈCES RECOMMANDÉES PAR LE FABRICANT

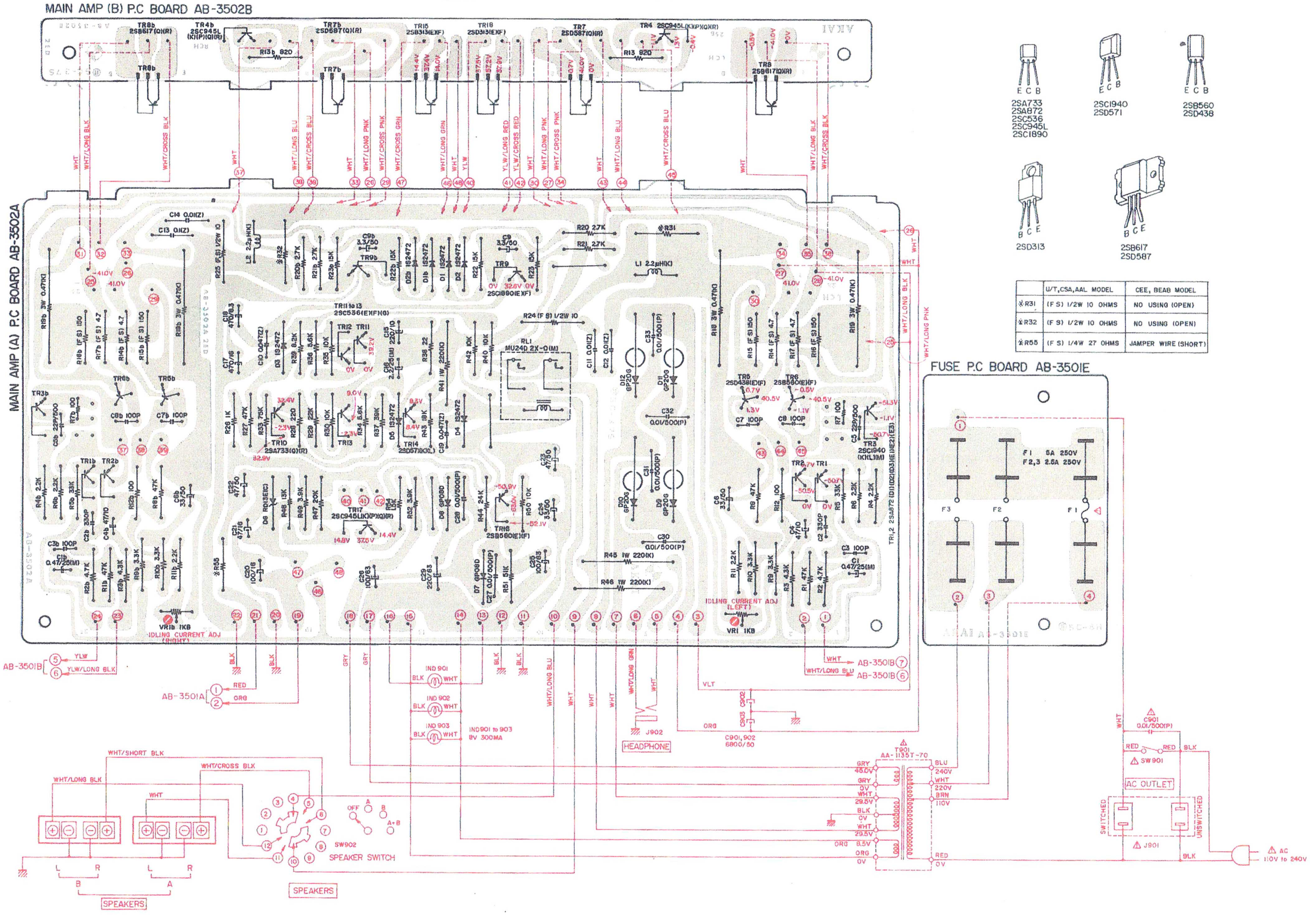

	U/T,CSA,AAL MODEL	CEE, BEAB MODEL
※R31	(F S) 1/2W 10 OHMS	NO USING (OPEN)
※R32	(F S) 1/2W 10 OHMS	NO USING (OPEN)
※R55	(F S) 1/4W 27 OHMS	JAMPER WIRE (SHORT)

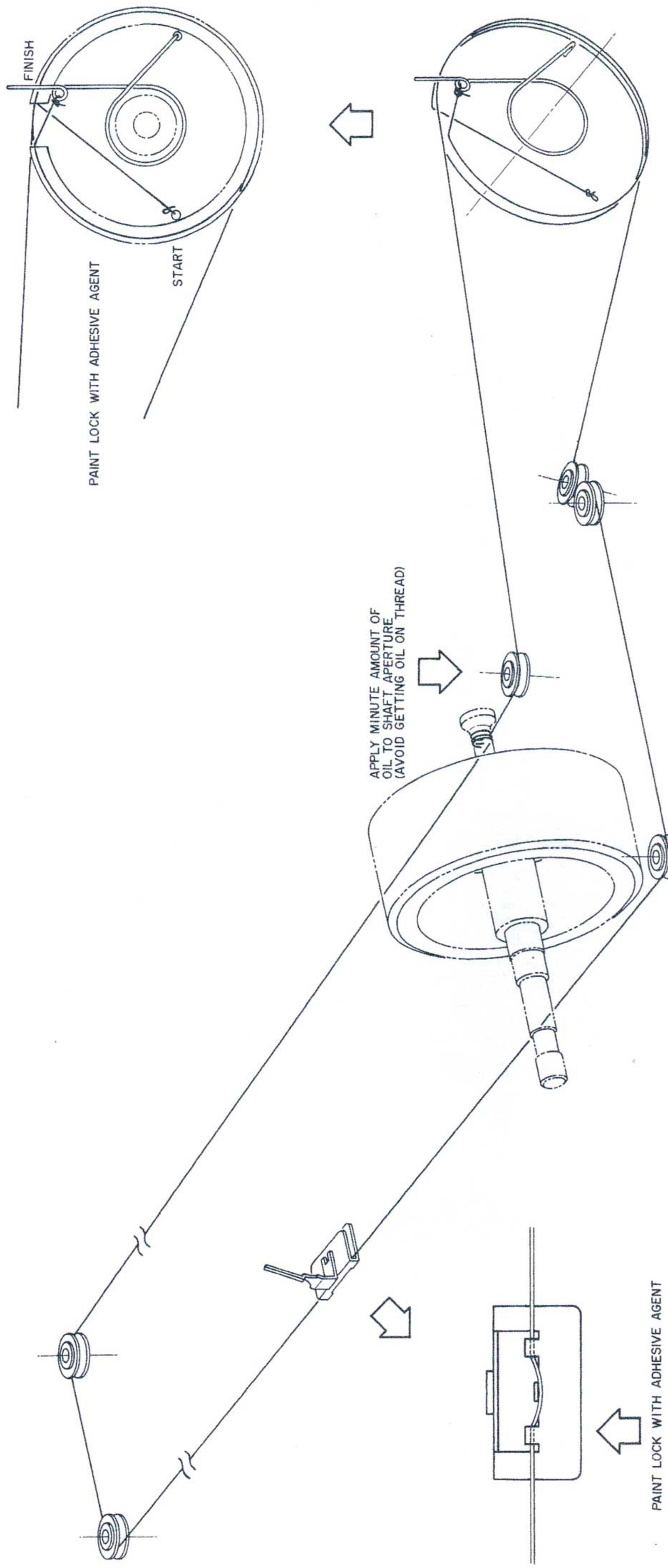

Fig. 25 Tuning Cord Threading

XI. CLASSIFICATION OF VARIOUS P.C BOARDS

1. RELATION OF P.C BOARD TITLE AND IDENTIFICATION NUMBER

1) Model AA-1135

P.C Board Title	P.C Board Number
Multi Function P.C Board	AB-3501A
Tone Control P.C Board	AB-3501B
Mute P.C Board	AB-3501C
LED P.C Board	AB-3501D
Fuse P.C Board	AB-3501E
Main Amp (A) P.C Board	AB-3502A
Main Amp (B) P.C Board	AB-3502B

Chart 4

2) Model AA-1150

P.C Board Title	P.C Board Number
. Multi Function P.C Board	AB-5001A
Tone Control P.C Board	AB-5001B
Filter Mute P.C Board	AB-5001C
LED (A) P.C Board	AB-5001D
LED (B) P.C Board	AB-5001E
Fuse P.C Board	AB-5001F
Main Amp (A) P.C Board	AB-3502A
Main Amp (B) P.C Board	AB-3502B

Chart 5

www.hifiengine.com

2. MODEL AA-1135 COMPOSITION OF VARIOUS P.C BOARDS

1) MULTI FUNCTION P.C BOARD AB-3501A (3 ED) & LED P.C BOARD AB-3501D

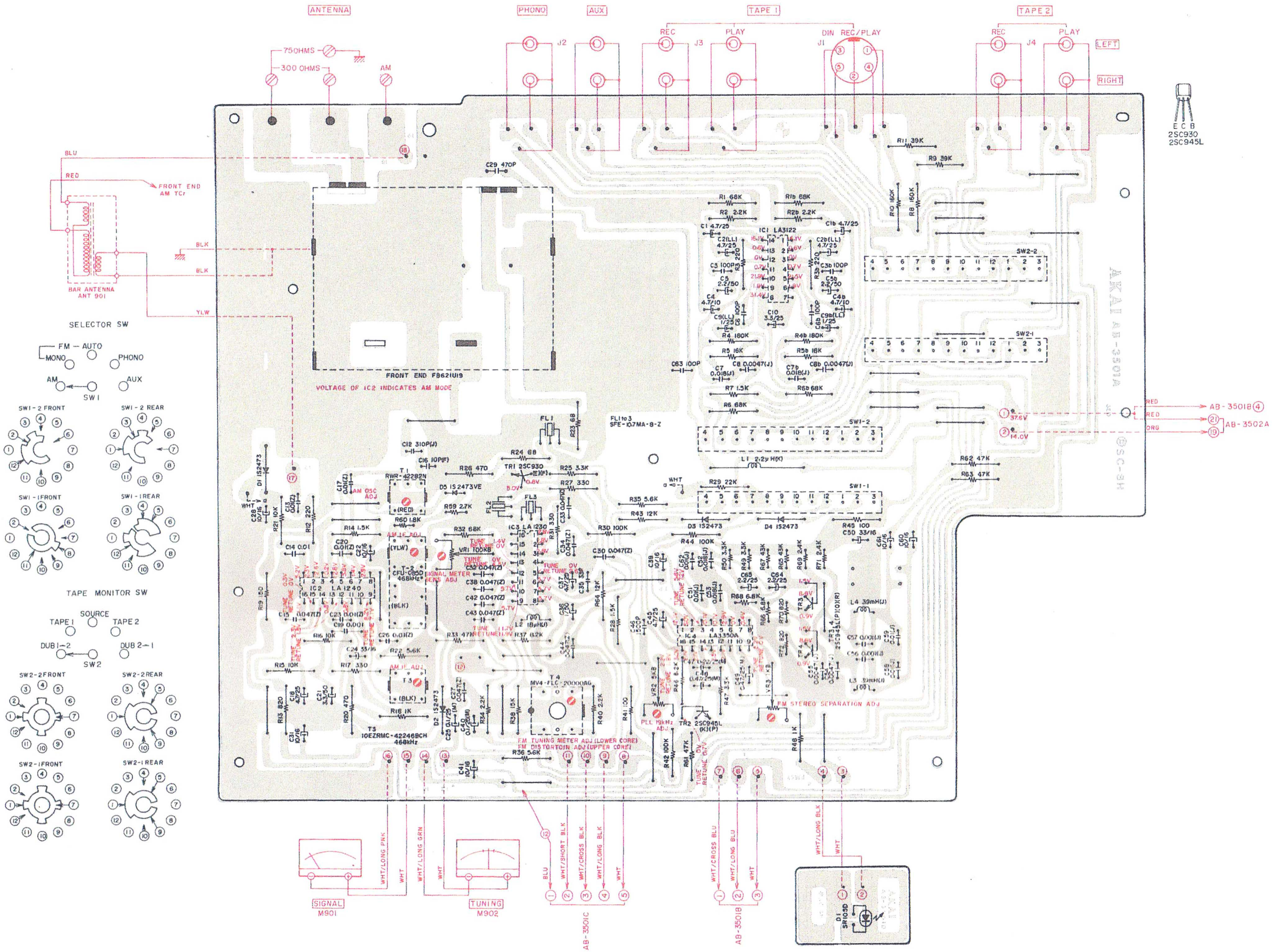

3) TONE CONTROL P.C BOARD AB-3501B

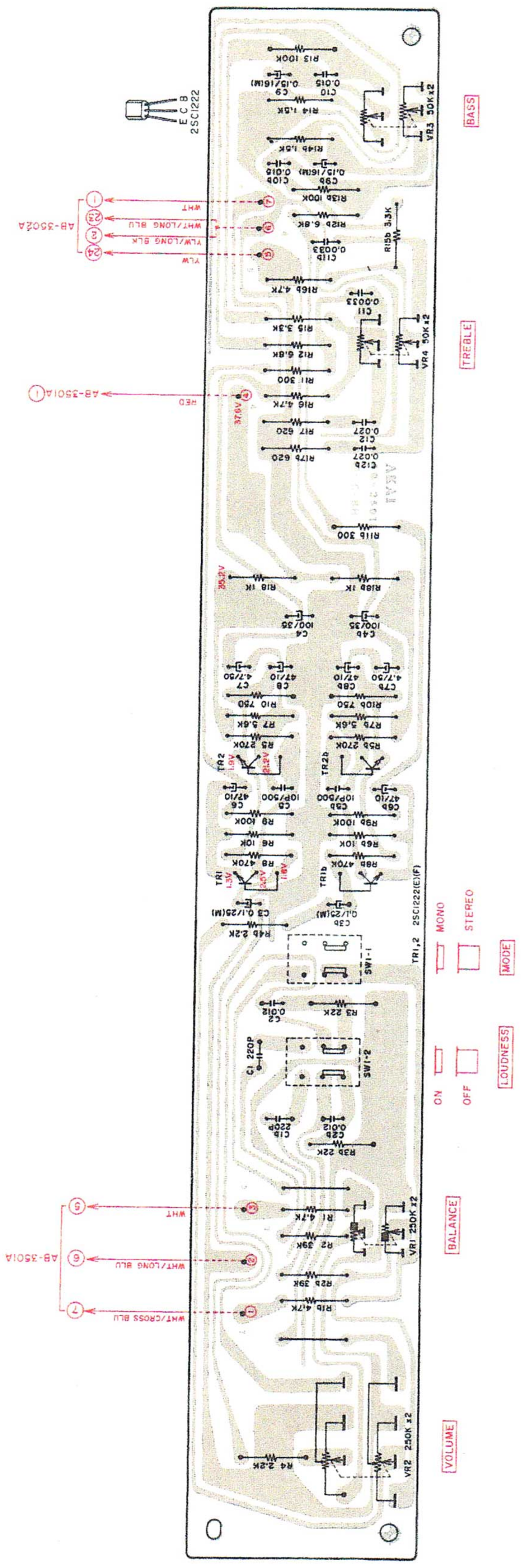

4) MUTE P.C BOARD AB-3501C

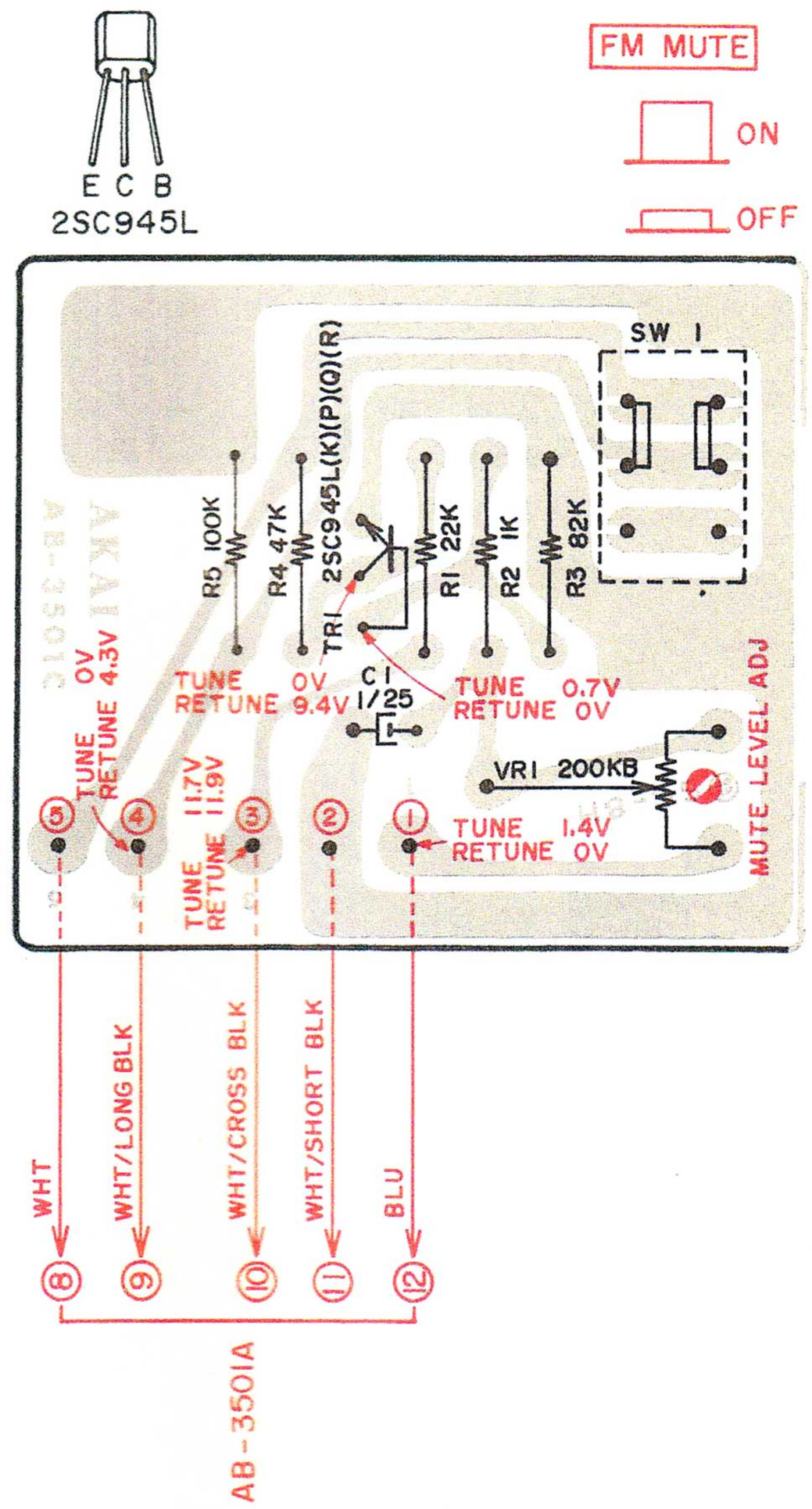

3. MODEL AA-1150 COMPOSITION OF VARIOUS P.C BOARDS

1) MULTI FUNCTION P.C BOARD AB-5001A (3 ED)

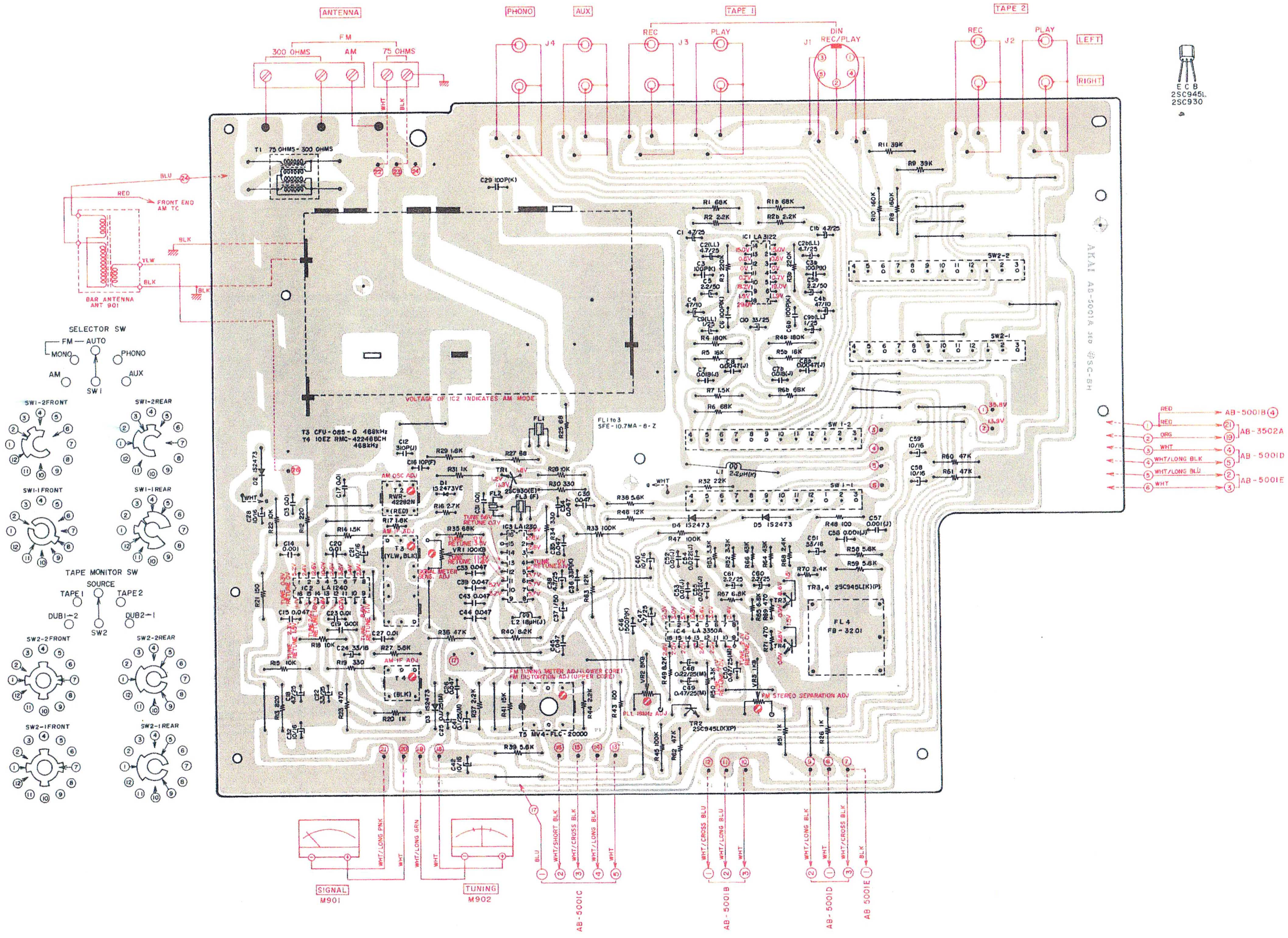

2) MAIN AMP (A/B) P.C BOARD AB-3502A/B (2ED) & FUSE P.C BOARD AB-5001F

WARNING: ⚠INDICATES SAFETY CRITICAL COMPONENTS. FOR CONTINUED SAFETY, REPLACE SAFETY CRITICAL COMPONENTS ONLY WITH MANUFACTURER'S RECOMMENDED PARTS

AVERTISSEMENT: ⚠IL INDIQU LES COMPOSANTS CRITIQUES DE SÛRETÉ. POUR MAINTENIR LE DEGRE DE SECURITE DE L'APPAREIL NE REMPLACER LES CONPOSANTS DONT LE FONCTIONNEMENT EST CRITIQUE POUR LA SECURITE QUE PAR DES PIECES RECOMMANDEES PAR LE FABRICANT

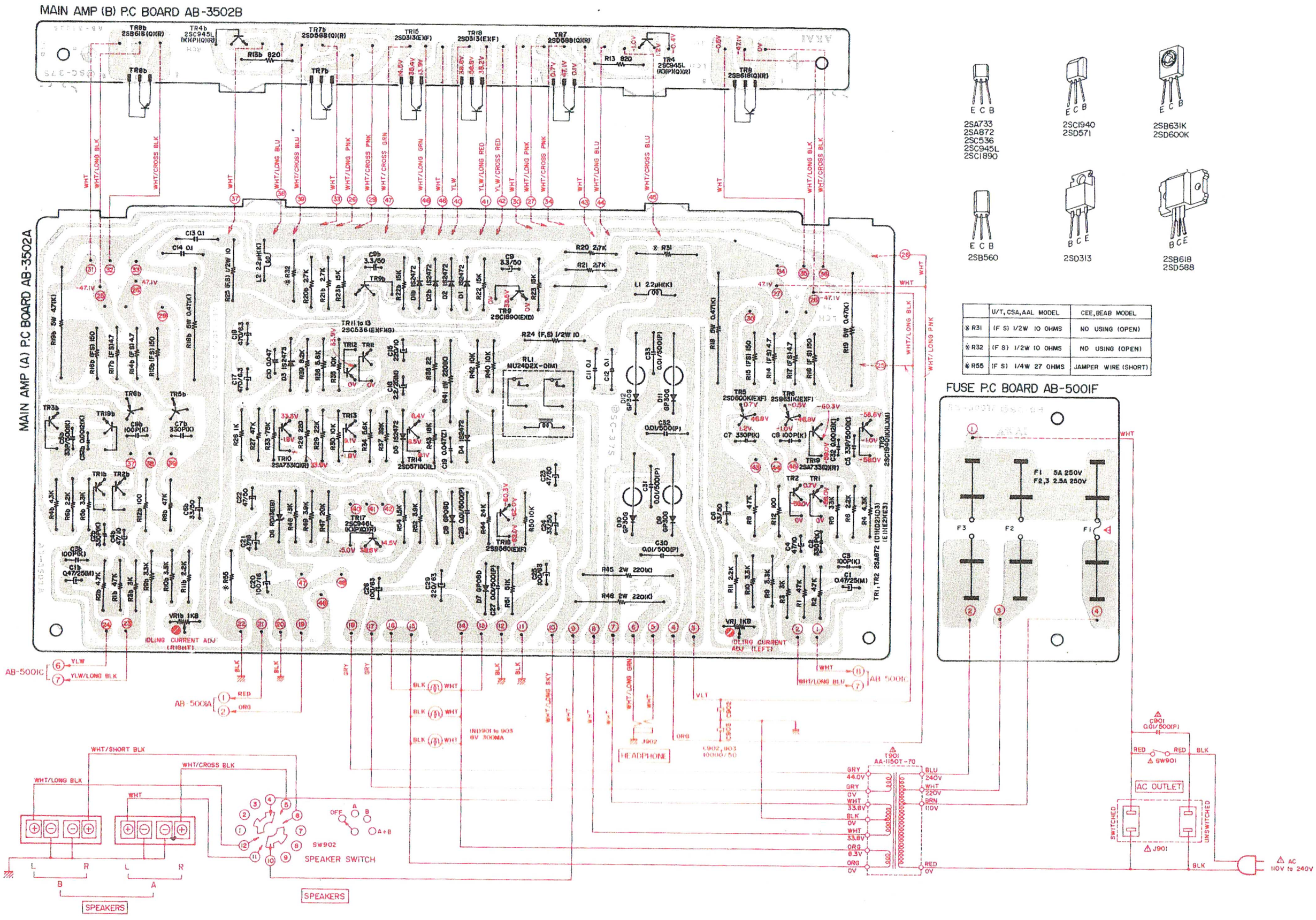

	U/T, CSA, AAL MODEL	CEE, BEAB MODEL
※R31	(F S) 1/2W 10 OHMS	NO USING (OPEN)
※R32	(F S) 1/2W 10 OHMS	NO USING (OPEN)
※R55	(F S) 1/4W 27 OHMS	JAMPER WIRE (SHORT)

3) TONE CONTROL P.C BOARD AB-5001B

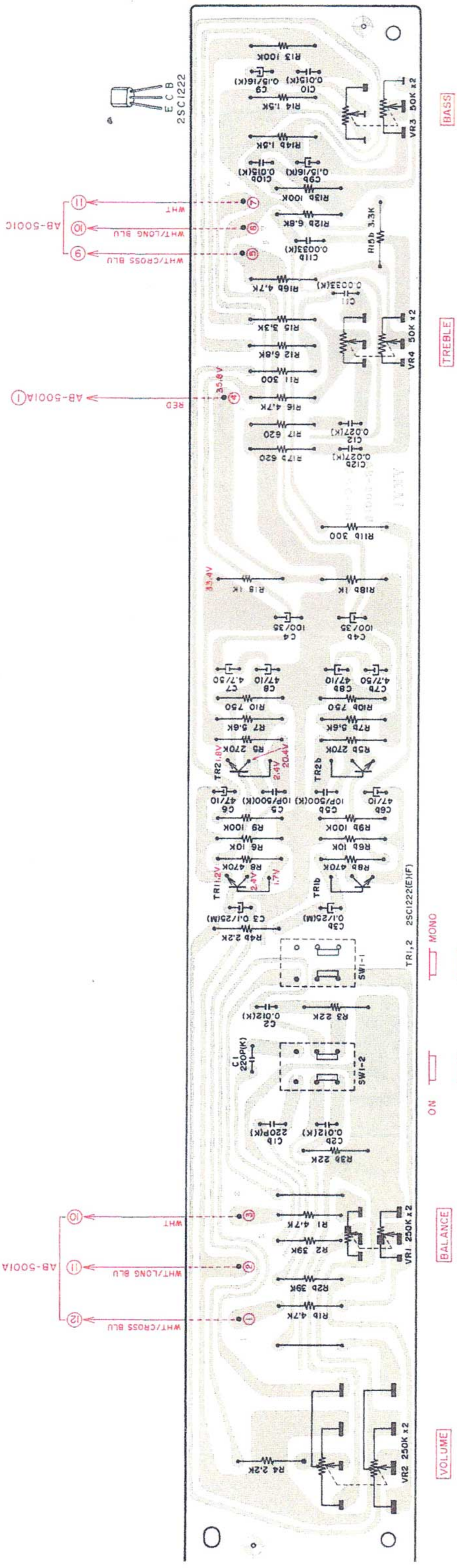

4) FILTER MUTE P.C BORAD AB-5001C

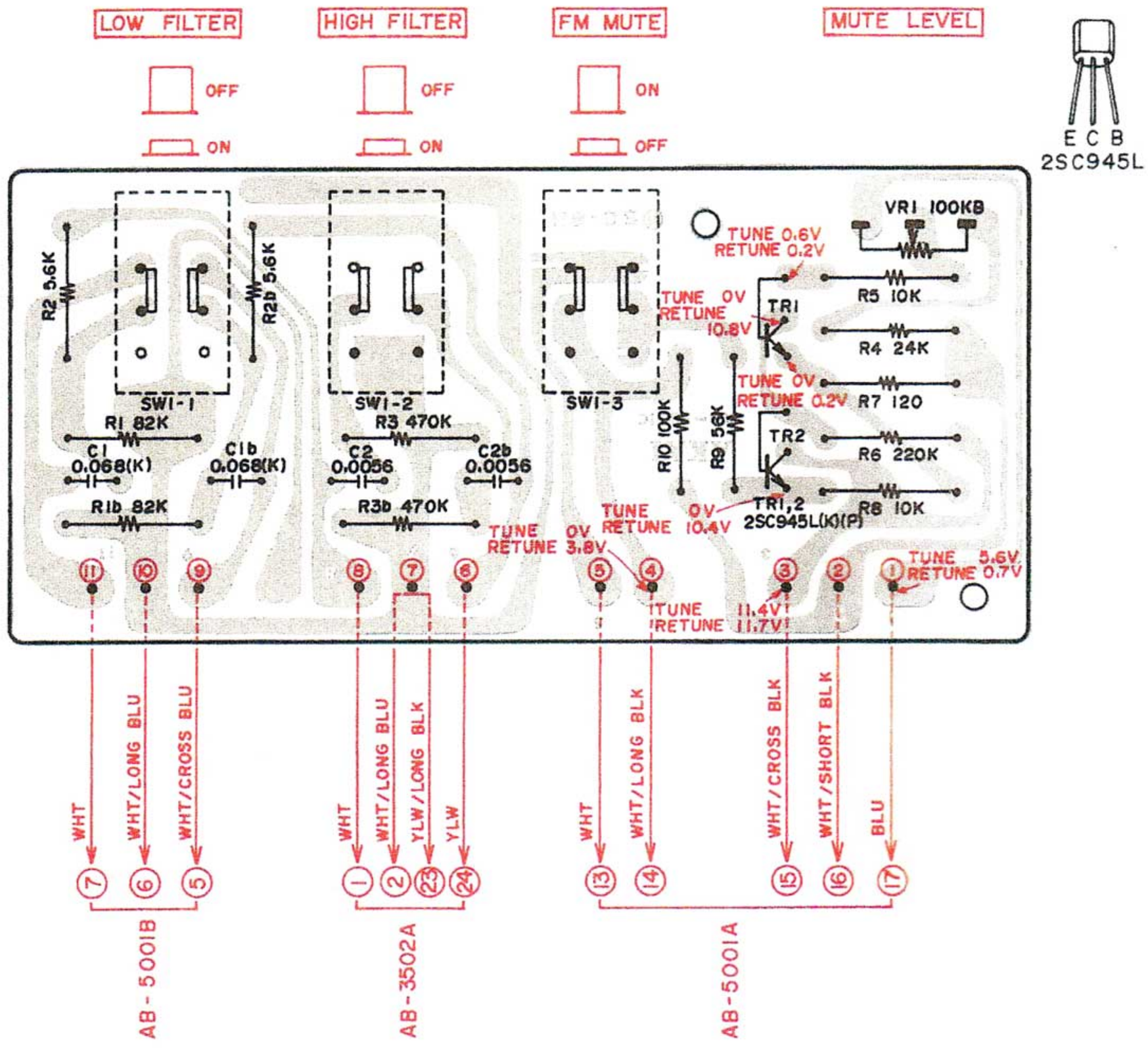

5) LED (A/B) P.C BOARD AB-5001D/E

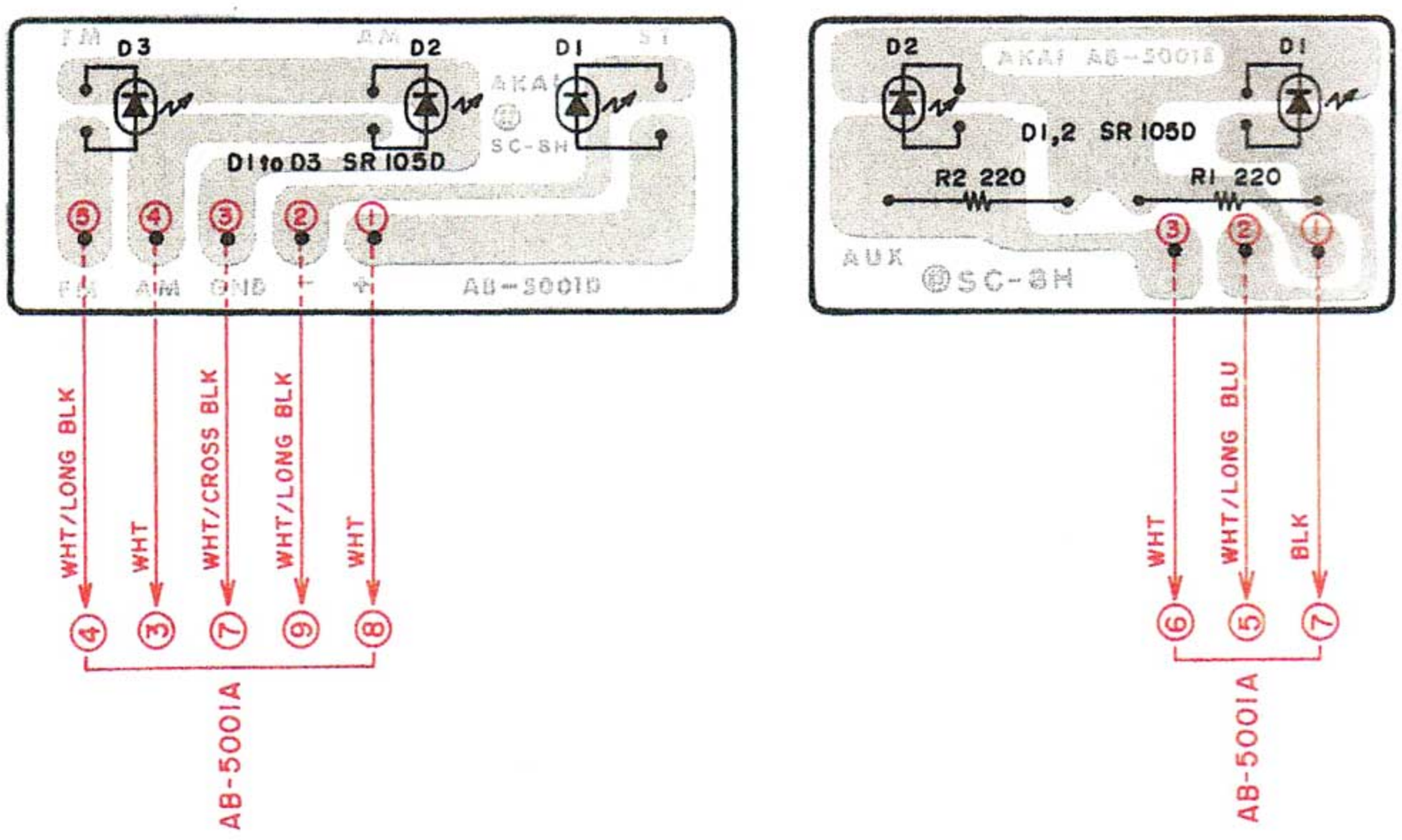

SECTION 2

PARTS LIST

TABLE OF CONTENTS

RECOMMENDED SPARE PARTS LIST 34

[1] AA-1135/BL

1. MULTI FUNCTION P.C BOARD (AB-3501A) BLOCK 36
2. TONE CONTROL P.C BOARD (AB-3501B) BLOCK 36
3. MUTE P.C BOARD (AB-3501C) BLOCK 37
4. MAIN AMP P.C BOARD (A) (AB-3502A)/(B) (AB-3502B) BLOCK 37
5. ASSEMBLY BLOCK 38
6. FINAL ASSEMBLY BLOCK 40

[2] AA-1150/BL

7. MULTI FUNCTION P.C BOARD (AB-5001A) BLOCK 41
8. TONE CONTROL P.C BOARD (AB-5001B) BLOCK 41
9. FILTER MUTE P.C BOARD (AB-5001C) BLOCK 41
10. MAIN AMP P.C BOARD (A) (AB-3502A)/(B) (AB-3502B) BLOCK 41
11. ASSEMBLY BLOCK 42
12. FINAL ASSEMBLY BLOCK 44

LIST OF INTERCHANGEABLE SEMICONDUCTORS 45

INDEX 47

Resister and Capacitor which is not listed in this parts list, please refer to COMMON LIST FOR SERVICE PARTS.

www.hifiengine.com

HOW TO USE THIS PARTS LIST

1. This parts list is compiled by various individual blocks based on assembly process.
2. When ordering parts, please describe parts number, serial number, and model number in detail.
3. How to read list.

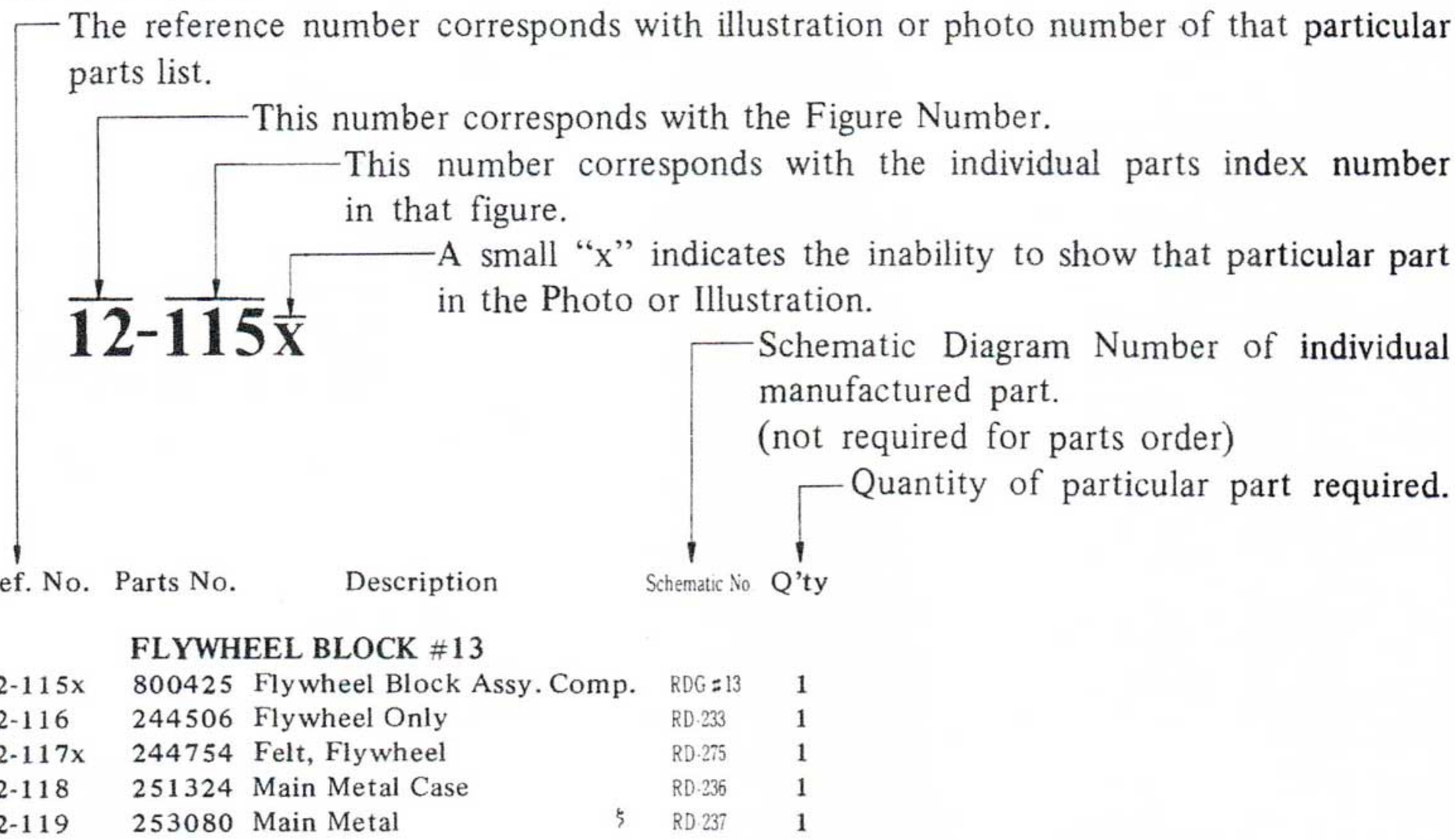

4. The symbol numbers shown on the P.C. Board list can be matched with the Composite Views of components of the Schematic Diagram or Service Manual.
5. The indications of Resistors and Capacitors in the photos of P.C. Board are being eliminated.
6. The shape of the parts and parts name, etc. can be confirmed by comparing them with the parts shown on the Electrical Parts Table of P.C. Board.
7. Both the kind of part and installation position can be determined by the Parts Number. To determine where a parts number is listed, utilize Parts Index at end of Parts List. It is necessary first of all to find the Parts Number. This can be accomplished by using the Reference Number listed at right of parts number in the Parts Index. (meaning of ref. no. outlined in Item 3 above).
8. Utilize separate "Price List for Parts" to determine unit price. The most simple method of finding parts Price is to utilize the reference number.

CAUTION:

1. When placing an order for parts, be sure to list the parts no. model no., and description. There are instances in which if any of this information is omitted, parts cannot be shipped or the wrong parts will be delivered.
2. Please be careful not to make a mistake in the parts no. If the parts no. is in error, a part different from the one ordered may be delivered.
3. Because parts number and parts unit supply in the Preliminary Service Manual (Basic Parts List) may be partially changed, please use this parts list for all future reference.

WARNING: ⚠ INDICATES SAFETY CRITICAL COMPONENTS. FOR CONTINUED SAFETY, REPLACE SAFETY CRITICAL COMPONENTS ONLY WITH MANUFACTURER'S RECOMEMNDED PARTS.

AVERTISSEMENT: ⚠ IL INDIQU LES COMPOSANTS CRITIQUES DE SURETE. POUR MAINTENIR LE DEGRE DE SECURITE DE L'APPAREIL NE REMPLACER LES COMPOSANTS DONT LE FONCTIONNEMENT EST CRITIQUE POUR LA SECURITE QUE PAR DES PIECES RECOMMANDEES PAR LE FABRICANT.

www.hifiengine.com

AC INLET SYSTEM

This model is equipped with an AC INLET SYSTEM. Please refer to the AC INLET SYSTEM CHART below for the specific type. By the AC INLET SYSTEM, AC (mains) cord can be connected to and disconnected from the model because the model is provided with socket exclusively for AC (mains) cord on its main body.
Please note, however, that certain models are not equipped with this system and has a built-in AC (mains) cord as before.

AC INLET SYSTEM CHART

CLASS I

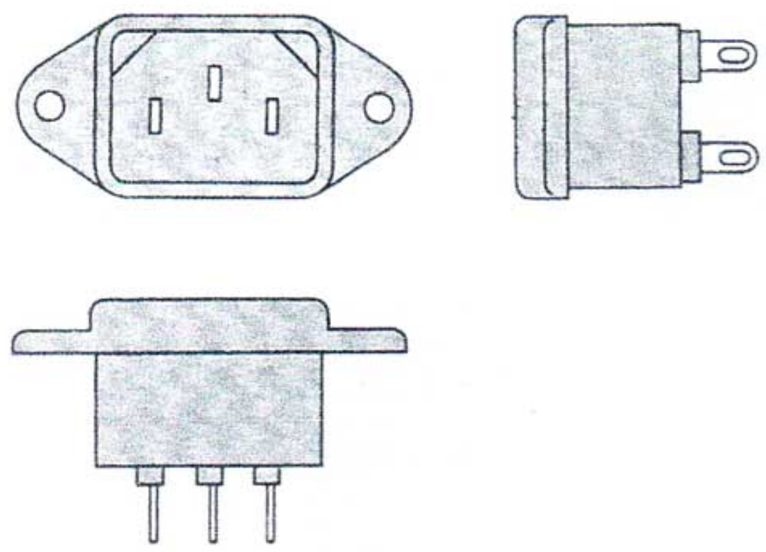

CLASS II

This mark indicating double insulation will be attached to machine's rear panel

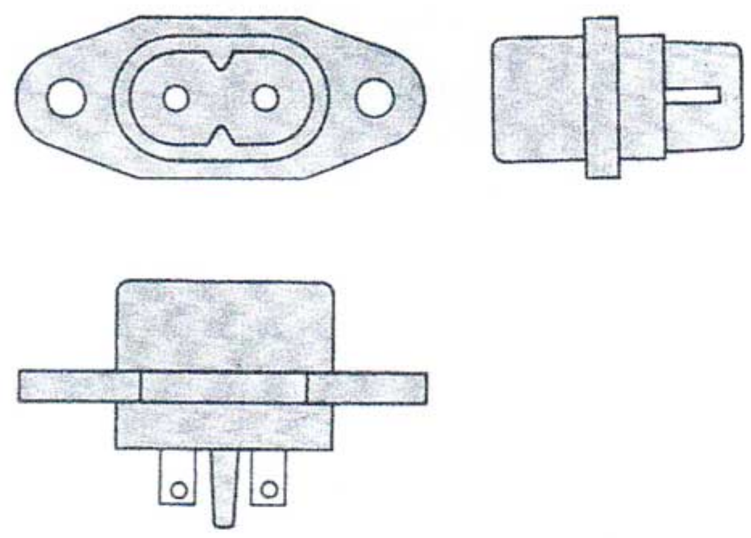

Picture 1

AC INLET to be installed on machines

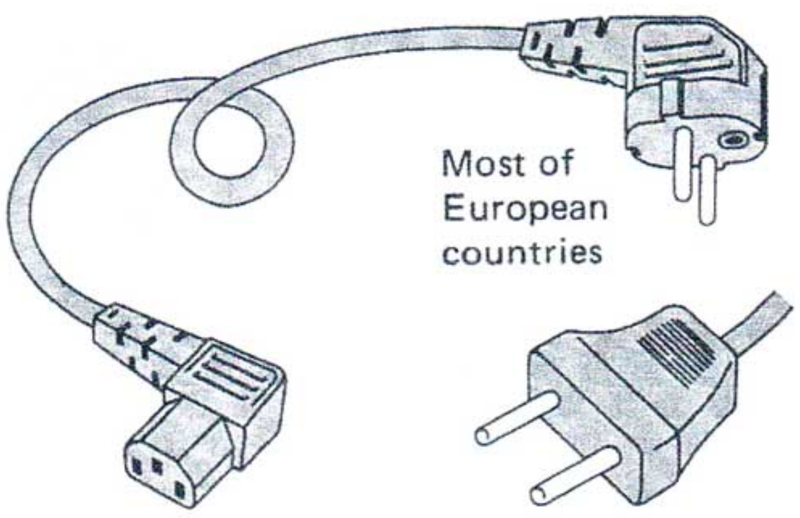

Connects to machine's AC Inlet

Denmark

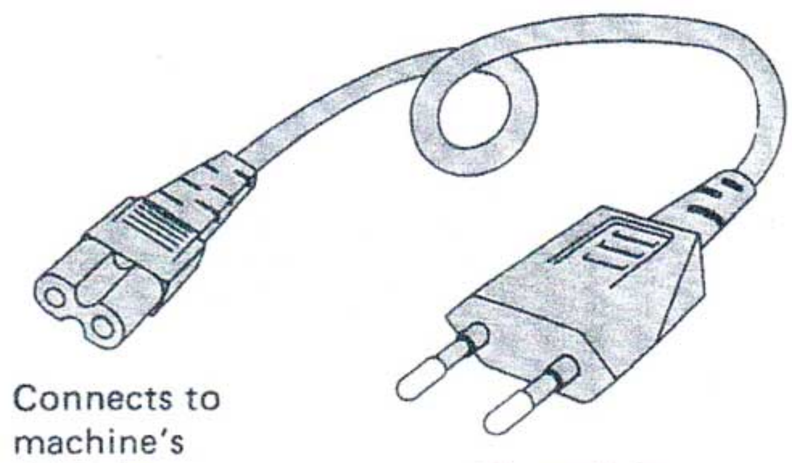

Connects to machine's AC Inlet

Most of the European countries

Picture 2

AC (mains) cord

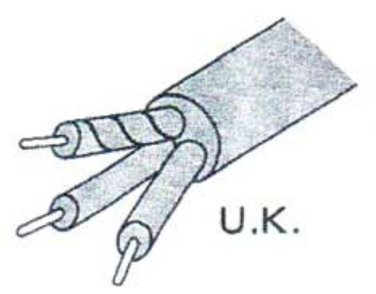

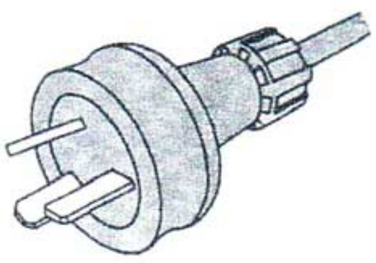

Australia differs according to wall socket

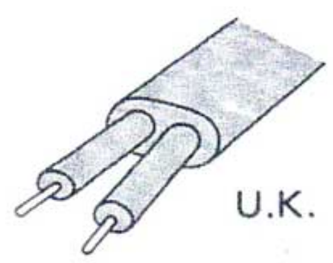

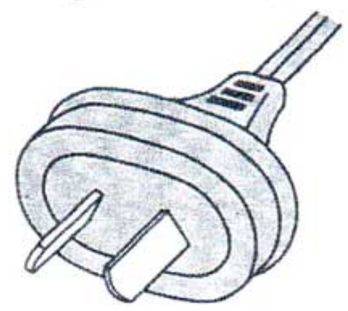

Australia differs according to wall socket

Parts List for AC (mains) Cord Set

Standard		Description	Type of AC Inlet	Parts No.
Class I	CEE	Cord Set CEE (3 cores)	3P	EW302993
	BEAB	Cord Set BEAB (3 cores)	3P	EW302994
	SAA	Cord Set SAA (3 cores)	3P	EW302996
	U/T	Cord Set U/T (3 cores)	3P	EW302646
Class II	CEE	Cord Set CEE (2 cores)	2P	EW638144
	BEAB	Cord Set BEAB (2 cores)	2P	EW302995
	SAA	Cord Set SAA (2 cores)	2P	EW302991
	U/T	Cord Set U/T (2 cores)	2P	EW302999

www.hifiengine.com

RECOMMENDED SPARE PARTS LIST

Because, if the parts listed below are on hand, almost any repair can be accomplished, we suggest that you stock these Recommended Spare Parts Items.

Parts No.	Description	Note
BA300377	Multi Function P.C Board Comp. AB-3501A	U/T, CSA, AAL AA-1135 Only
BA303317	Multi Function P.C Board Comp. AB-3501A	CEE, BEAB AA-1135 Only
BA300375	Tone Control P.C Board Comp. AB-3501B	AA-1135 Only
BA300371	Mute P.C Board Comp. AB-3501C	AA-1135 Only
BA300387	Main Amp P.C Board (A) Comp. AB-3502A	U/T, CSA, AAL AA-1135 Only
BA304137	Main Amp P.C Board (A) Comp. AB-3502A	CEE, BEAB AA-1135 Only
BA300732	Multi Function P.C Board Comp. AB-5001A	U/T, CSA, AAL AA-1150 Only
BA303319	Multi Function P.C Board Comp. AB-5001A	CEE, BEAB AA-1150 Only
BA301548	Tone Control P.C Board Comp. AB-5001B	AA-1150 Only
BA300728	Filter Mute P.C Board Comp. AB-5001C	AA-1150 Only
BA301654	Main Amp P.C Board (A) Comp. AB-3502A	U/T, CSA, AAL AA-1150 Only
BA304138	Main Amp P.C Board (A) Comp. AB-3502A	CEE, BEAB AA-1150 Only
BA300389	Main Amp P.C Board (B) Comp. AB-3502B	
BT301177	⚠ Power Trans. AA-1135T-70	T901 U/T AA-1135 Only
BT301171	⚠ Power Trans. AA-1135T-30	T901 CSA
BT301172	⚠ Power Trans. AA-1135T-20	T901 AAL
BT301174	⚠ Power Trans. AA-1135T-40	T901 CEE
BT301175	⚠ Power Trans. AA-1135T-50	T901 BEAB
BT301239	⚠ Power Trans. AA-1150T-70	T901 U/T AA-1150 Only
BT301236	⚠ Power Trans. AA-1150T-30	T901 CSA
BT301234	⚠ Power Trans. AA-1150T-20	T901 AAL
BT301237	⚠ Power Trans. AA-1150T-40	T901 CEE
BT301238	⚠ Power Trans. AA-1150T-50	T901 BEAB
ED300924	Silicon Diode GP08D	
ED245417	Silicon Diode GP20G	AA-1135 Only
ED245428	Silicon Diode GP30G	AA-1150 Only
ED300829	Zener Diode RD13E (C)	
ED698826	LED SR-105D	
EE301419	Front End FB513U12	AA-1135 Only
EE301242	Front End FB621U19	AA-1150 Only
EI697871	IC LA3122S	
EI293185	IC LA1240	AA-1150 Only
EI299700	IC HA1197	AA-1135 Only
EI650586	IC LA1230	
EI293207	IC LA3350A	
EM204344	Signal Meter KL-243X-9	M901
EM300355	Signal Meter KL-243X-26 (BL)	M901 (BL) Model Only

www.hifiengine.com

Parts No.	Description	Note
EM204355	Tuning Meter KL-243X-10	M902
EM300354	Tuning Meter KL-243X-27 (BL)	M902 (BL) Model Only
EP300917	Relay MU24D2X-0 (M)	RL1
ES224436	⚠ Push SW. JP01	SW901 U/T
ES239218	⚠ Push SW. JP01 (TV-4)	SW901 CSA, AAL
ES242346	⚠ Push SW. JP17	SW901 CEE, BEAB
ET557965	Transistor 2SA733 (Q) (R)	
ET293218	Transistor 2SA872 (D1) (D2) (D3) (E1) (E2) (E3)	
ET219868	Transistor 2SB560 (E) (F)	
ET302713	Transistor 2SB617 (Q) (R)	AA-1135 Only
ET302716	Transistor 2SB618 (Q) (R)	AA-1150 Only
ET301165	Transistor 2SB631K (E) (F)	AA-1150 Only
ET240660	Transistor 2SB560 (E) (F) RED	AA-1135 Only
ET621235	Transistor 2SC536 (E) (F) (G)	
ET618873	Transistor 2SC930 (E) (F)	
ET635220	Transistor 2SC945L (K) (P)	
ET635218	Transistor 2SC945L (K) (P) (Q) (R)	
ET459810	Transistor 2SC1222 (E) (F)	
ET300928	Transistor 2SC1890 (E) (D)	
ET240636	Transistor 2SC1940 (K) (L) (M)	
ET452531	Transistor 2SD313 (E) (F)	
ET240671	Transistor 2SD438 (E) (F) RED	AA-1135 Only
ET666404	Transistor 2SD571 (K) (L)	
ET302714	Transistor 2SD587 (Q) (R)	AA-1135 Only
ET302715	Transistor 2SD588 (Q) (R)	AA-1150 Only
ET300931	Transistor 2SD600K (E) (F)	AA-1150 Only

www.hifiengine.com

3. MUTE P.C BOARD (AB-3501C) BLOCK

Symbol No.	Parts No.	Description	Schematic No.	Q'ty
3-1	BA300371	Mute P.C Board Comp. AA-1135	AB-3558	1
3-TR1	ET635218	Transistor 2SC945L (K)(P)(Q)(R)	45-1-85	1
3-VR1	EV648527	Semi-fixed/Vol. V10K8-4-2 200 kB	36-10-250	1
3-SW1	ES301180	Push SW. J-P7104#04	25-5-262	1

4. MAIN AMP P.C BOARD (A)(AB-3502A)/ (B)(AB-3502B) BLOCK

Symbol No.	Parts No.	Description	Schematic No.	Q'ty
4-1	BA300387	Main Amp P.C Board (A) Comp. AA-1135	AB-3557	1
4-2	BA304137	Main Amp P.C Board (A) Comp. AA-1135 (CEE)		1
4-TR1,2	ET293218	Transistor 2SA872(D1,2,3) (E1,2,3)	45-1-260	4
4-TR3	ET240636	Transistor 2SC1940(K)(L)(M)	45-1-241	2
4-TR5	ET240671	Transistor 2SD438(E)(F) RED	45-1-252	2
4-TR6	ET240660	Transistor 2SB560(E)(F) RED	45-1-251	2
4-TR9	ET300928	Transistor 2SC1890(E)(D)	45-1-279	2
4-TR10	ET557965	Transistor 2SA733(Q)(R)	45-1-124	1
4-TR11to13	ET621235	Transistor 2SC536(E)(F)(G)	45-1-55	3
4-TR14	ET666404	Transistor 2SD571(K)(L)	45-1-218	1
4-TR16	ET219868	Transistor 2SB560(E)(F)	45-1-232	1
4-TR17	ET635218	Transistor 2SC945L (K)(P)(Q)(R)	45-1-85	1
4-D1to5	ED214457	Silicon Diode 1S2472	45-3-41	4
4-D6	ED300829	Zener Diode RD-13E(C)	45-6-72	1
4-D7,8	ED300924	Silicon Diode GP08D	45-2-68	2
4-D9to12	ED245417	Silicon Diode GP20G	45-2-70	4
4-VR1	EV300921	Semi-fixed/Vol. V10K8-1-2 1 kB	36-10-255	2
4-L1,2	EO650823	Phase Compensation Coil 2.2μH(K)	23-1-239	2
4-RL1	EP300917	Relay MU24D2X-0(M)	47-1-34	1
4-R14	ER293580	Carbon/R.(F) 1/4W 4.7 ohms(J)	35-11-12	2
4-R15,16	ER663614	Carbon/R.(F) 1/4W 150 ohms(J)	35-11-12	4
4-R17	ER293580	Carbon/R.(F) 1/4W 4.7 ohms(J)	35-11-12	2
4-R18	ER301762	Cement/R. (Wire Wound Type) 3W 0.47 ohms(K)	35-16-58	2
4-R19	ER300925	Cement/R. (Wire Wound Type) 3W 0.47 ohms(K)	35-16-2	2
4-R24,25	ER666224	Carbon/R.(F) 1/2W 10 ohms(J)	35-11-13	2
4-R31,32	ER666224	Carbon/R.(F) 1/2W 10 ohms(J)	35-11-13	2
4-R41	ER389687	Metal Oxide Film/R. 1W 220 ohms(K)	35-15-10	1
4-R45,46	ER389687	Metal Oxide Film/R. 1W 220 ohms(K)	35-15-10	2
4-R55	ER223525	Carbon/R.(F) 1/4W 27 ohms(J)	35-11-12	1
4-C1	EC621257	Solid Aluminum/C.(Vert. Type) 0.47μF(M) 25WV	24-19-2	2
4-C16	EC662128	Solid Aluminum/C.(Vert. Type) 2.2μF(M) 25WV	24-19-2	1
4-C27,28	EC204671	Ceramic/C. DD31-6 0.01μF(P) 500WV	24-5-66	2
4-C30to33	EC204671	Ceramic/C. DD31-6 0.01μF(P) 500WV	24-5-66	4
4-3	BA300389	Main Amp P.C Board (B) Comp. AA-1135	AB-3557	1
4-TR4	ET635218	Transistor 2SC945L (K)(P)(Q)(R)	45-1-85	2

www.hifiengine.com

5. ILLUSTRATION OF ASSEMBLY BLOCK

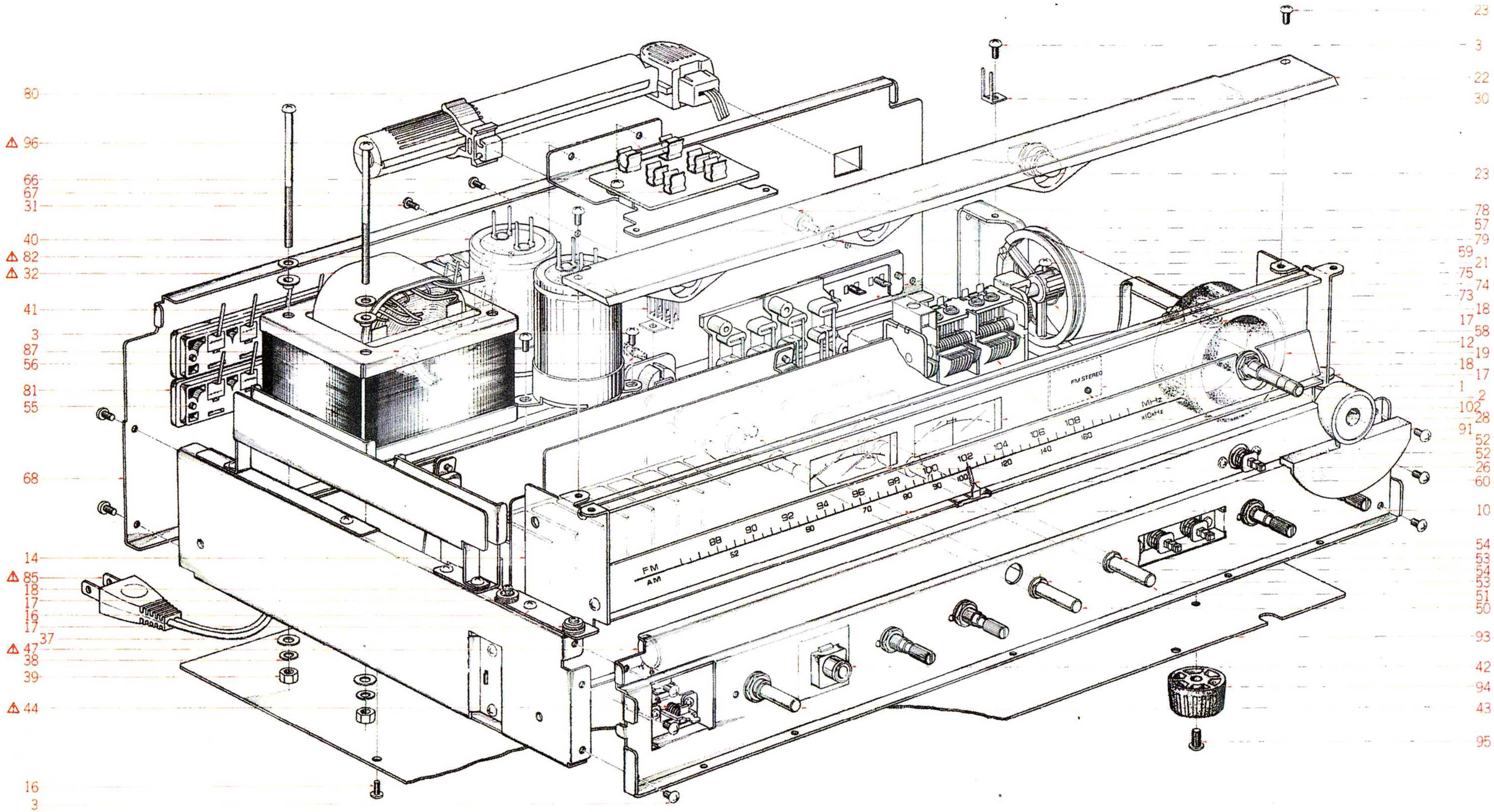

5) ASSEMBLY BLOCK

Ref. No.	Parts No.	Description	Schematic No.	Q'ty
		LED P.C BOARD BLOCK		
5-1	BA300378	LED P.C Board Comp. AA-1135	AB-3559	1
5-2	ED698826	LED SR-105D	45-15-16	1
		MAIN AMP P.C BOARD BLOCK		
5-3	ZS325495	Tapping Screw #2, 3x6(BR)		47
5-4x	ET302714	Transistor 2SD587(Q)(R)	45-1-274	2
5-5x	ET302713	Transistor 2SB617(Q)(R)	45-1-273	2
5-6x	ET452531	Transistor 2SD313(E)(F)	45-1-105	1
5-7x	ET452531	Transistor 2SD313(E)(F)	45-1-105	1
5-8x	ZW632226	Insulator Washer, Bush M	45-16-27	2
5-9x	ZS421806	Screw, pan head 3x8		10
		SCALE PLATE BLOCK		
5-10	TA301023	Scale Plate (A)	AB-3525/3526	1
5-11x	TA303289	Scale Plate (C)(BL)	AB-3525/3526	1
5-12	TA300904	Scale Holder (A)	AB-3512	1
5-13x	TA301650	Scale Holder (A-BL)	AB-3512	1
5-14	TA300905	Scale Holder (B)	AB-3513	1
5-15x	TA301649	Scale Holder (B-BL)	AB-3513	1
5-16	ZS447840	Tapping Screw #2, 3x8(BR)		8
5-17	MR530662	Roller B	91-5009	6
5-18	ZS530673	Roller Screw A	91-5010	6
5-19	TA301772	Tuning Wheel Part-G	13-2-34	1
5-20x	ZW259514	Washer (Nylon) D3.1x8x1t		7
5-21	ZS379350	Screw, pan head 3x6		13
5-22	SM300915	Illumination Plate	AB-3524	1
5-23	EL301185	Lamp 8V 300MA(400MMx2)	28-2-60	1
5-24	EL301191	Lamp 8V 300MA(500MMx2)	28-2-60	1
5-25	EL301204	Lamp 8V 300MA(600MMx2)	28-2-60	1
5-26	EM204344	Signal Meter KL-243X-9	46-1-127	1
5-27x	EM300355	Signal Meter KL-243X-26 (BL)	46-1-165	1
5-28	EM204355	Tuning Meter KL-243X-10	46-1-128	1
5-29x	EM300354	Tuning Meter KL-243X-27 (BL)	46-1-163	1
		ASSEMBLY BLOCK		
5-30	EJ539447	Earth Terminal 2P, T4460	32-1-32	1
5-31	ZS447761	Tapping Screw #2, 3x6(BR) (Black)		8
5-32	BT301177	⚠ Power Trans. AA-1135T-70	38-4-519	1
5-33x	BT301171	⚠ Power Trans. AA-1135T-30 (CSA)	38-4-539	1
5-34x	BT301172	⚠ Power Trans. AA-1135T-20 (AAL)	38-4-553	1
5-35x	BT301174	⚠ Power Trans. AA-1135T-40 (CEE)	38-4-517	1
5-36x	BT301175	⚠ Power Trans. AA-1135T-50 (BEAB)	38-4-518	1
5-37	ZW575774	Washer (SPC) D4.5x9.8x0.7t		4
5-38	ZW273914	Spring Washer		4
5-39	ZW273960	Nut M4		4
5-40	EC301170	Elect./C. 6800μF 50WV	24-10-118	2
5-41	EJ551035	Wrapping Terminal, 4P T-5251	32-1-36	1
5-42	EJ301199	Headphone Jack 3P64M	31-2-83	1
5-43	ES301166	Rotary SW. SR321N1-2-4	25-7-48	1
5-44	ES224436	⚠ Push SW. JP01	25-5-221	1
5-45x	ES239218	⚠ Push SW. JP01 (TV-4) (CSA)	25-5-222	1
5-46x	ES242346	⚠ Push SW. JP17 (CEE)	25-5-224	1
5-47	EC684720	⚠ Ceramic/C. CLD16YE 0.01μF(P) 500WV	24-5-61	1
5-48x	EC286198	⚠ Ceramic/C. AL-10 0.01μF(Z) 125WV (CSA)	24-5-69	1
5-49x	EC301320	⚠ MP/C. PME271Y447 4700PF 250WV(CEE)	24-9-118	2
5-50	MS300898	Relay Shaft (B)	AB-3538	1
5-51	MS300899	Relay Shaft (C)	AB-3538	1
5-52	TA646773	Joint	AA-5240	2
5-53	ZW270123	'E' Ring 4M	6-1-9	4
5-54	ZW322110	Washer (Nylon) D6.1x10.3x1.0t		2

Ref. No.	Parts No.	Description	Schematic No.	Q'ty
5-57	MI301149	Dial Wheel AA-1135	2-15-17	1
5-58	ZG300891	Dial Wheel Spring	AB-3533	1
5-59	TA207347	Thread D0.5 2m		1
5-60	TA300414	Pointer Part AA-1135	AB-3534	1
5-61x	ZW288786	Earth Lug M3 (BSP) 0.8t (CSA, AAL)		1
5-62x	ZS417150	Screw, pan head 4x6 (CEE, BEAB)		1
5-63x	ZW273892	Toothed Lock Washer (CEE, BEAB)		1
5-64x	ZW273881	Earth Lug (CEE, BEAB)		1
5-65x	ZW416698	Nut M4 (CEE, BEAB)		1
		FUSE P.C BOARD BLOCK		
5-66	BA300381	Fuse P.C Board Comp. AA-1135 (only U/T)	AB-3561	1
5-67	EJ514822	Fuse Holder, P.C Board S-N5051	40-1-28	6
		REAR PANEL BLOCK		
5-68	SP300952	Rear Panel (1)	AB-3520	1
5-69x	SP300953	Rear Panel (2) (CSA)	AB-3520	1
5-70x	SP300954	Rear Panel (3) (AAL)	AB-3521	1
5-71x	SP300948	Rear Panel (4) (CEE)	AB-3522	1
5-72x	SP300949	Rear Panel (5) (BEAB)	AB-3522	1
5-73	EJ293646	3P Antenna Terminal Plate	32-1-78	1
5-74	ML300879	Earth Parts	AB-3517	1
5-75	ZS355522	Screw, pan head 3x6		4
5-76x	ZW288786	Earth Lug M3 (BSP) 0.8t		1
5-77x	ZW562476	Earth Lug M3		1
5-78	SK652397	Knob 0512-2	34-1-4	1
5-79	ZW652408	Washer (SPC) D3.2x10x0.5t		1
5-80	EE299621	Bar Antenna	55-1-49	1
5-81	EJ240581	4P Push Terminal	32-1-72	2
5-82	EZ225145	⚠ 2 throw AC Outlet	31-1-166	1
5-83x	EJ296853	⚠ 3P Inlet CM-3 (CEE, BEAB)	31-1-199	1
5-84x	ZS463353	Tapping Screw #2, 3x8 (BR) (CEE, BEAB)		2
5-85	EW374894	⚠ AC Cord CUL 3M	26-3-19	1
5-86x	EW207742	⚠ AC Cord CUL (CSA, AAL)	26-3-45	1
5-87	EZ631945	Strain Relief SR-4N-4	2-7-49	1
5-88x	EJ301197	Fuse Holder AA-35L (CSA, AAL)	40-1-150	1
5-89x	EJ303141	Fuse Holder AA-35S1 (CEE)	40-1-151	1
5-90x	EJ303140	Fuse Holder AA-35S2 (BEAB)	40-1-160	1
5-91	SE300910	Nut Cover	AB-3518	1
5-92x	SE301680	Nut Cover (BL)	AB-3518	1
5-93	SP300914	Bottom Plate	AB-3523	1
5-94	SZ645243	Circular Foot A CA	CA-6014	4
5-95	ZS565942	Tapping Screw #2, 4x8 (pan)		4
5-96	EF575212	⚠ Fuse 4A 250V	39-1-50	1
5-97x	EF277402	⚠ Fuse ST-2 1A (CSA, AAL)	39-1-63	1
5-98x	EF378595	⚠ Fuse ST-2 4A (CSA, AAL)	39-1-63	1
5-99x	EF623103	⚠ Fuse (SEMKO T Type) 1AT (CEE, BEAB)	39-1-53	2
5-100x	EF668474	⚠ Fuse (SEMKO T Type) 400MAT (CEE, BEAB)	39-1-53	1
5-101x	EF690996	⚠ Fuse (SEMKO T Type) 4AT (CEE, BEAB)	39-1-53	2
5-102	EE301419	Front End FB513U12	57-2-44	1

www.hifiengine.com

6. PHOTO OF FINAL ASSEMBLY BLOCK

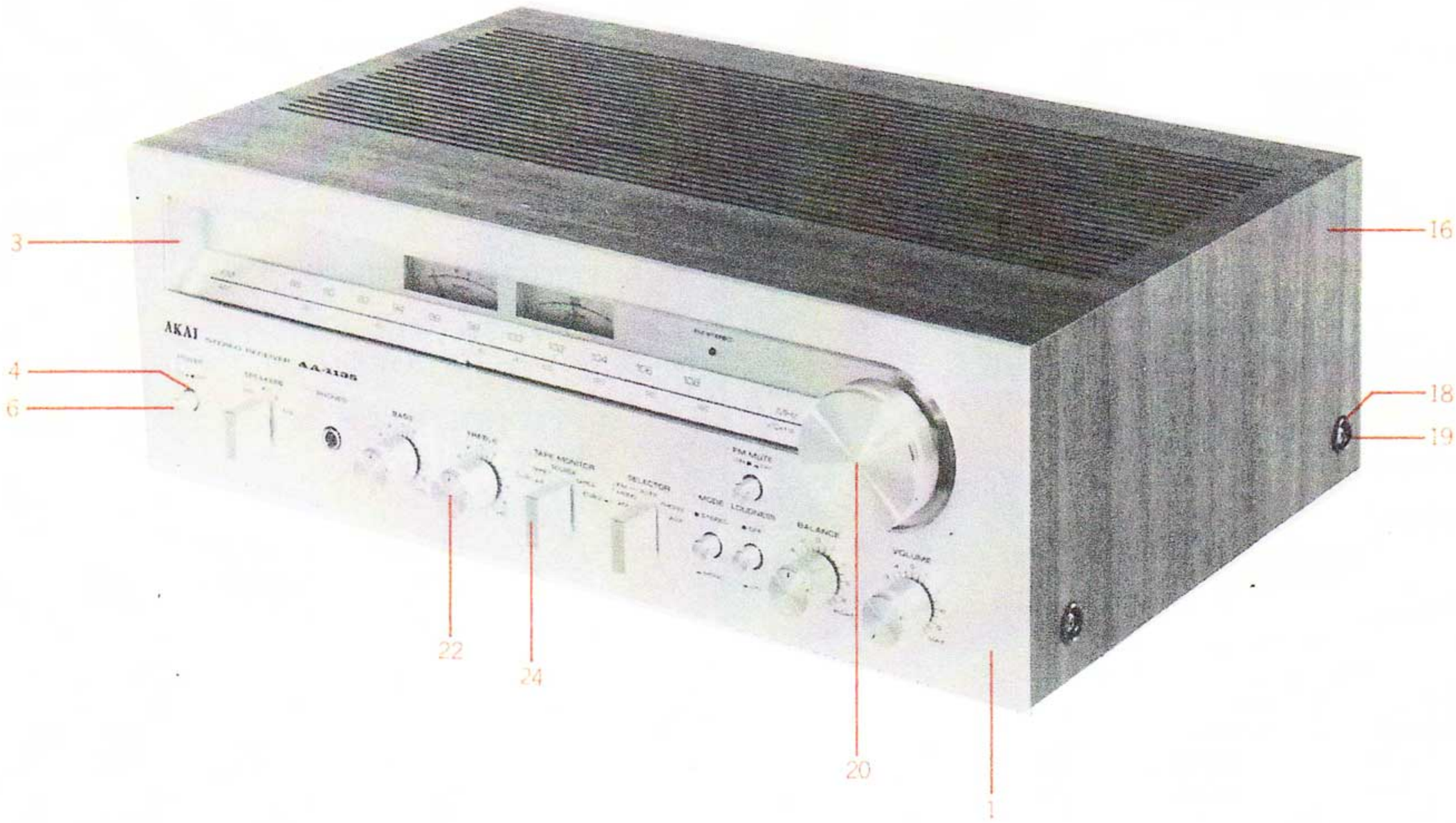

6) FINAL ASSEMBLY BLOCK

Ref. No.	Parts No.	Description	Schematic No.	Q'ty
		FRONT PANEL BLOCK		
6-1	BD300383	Front Panel Block Comp. AA-1135		1
6-2x	BD303296	Front Panel Block Comp. AA-1135-BL		1
6-3	SP300938	Front Plate	AB-3536	1
6-4	SE286560	Button Escutcheon (B)	AC-3538	2
6-5x	ZG286435	Taper Spring	AC-3536	4
6-6	SK301969	Push Button Knob (B)	AC-3537	4
6-7x	SK301807	Push Button Knob (D) (BL)	AC-3562	4
		FINAL ASSEMBLY BLOCK		
6-8x	ZS447840	Tapping Screw #2, 3x8 (BR)		2
6-9x	ZS379350	Screw, pan head 3x6		2
6-10x	ZW330412	Adjust, Washer (U) D4x13x0.13t		2
6-11x	ZW330423	Adjust, Washer (U) D4x13x0.25t		2
6-12x	ZW603797	Adjust. Washer (U) D4x13x0.5t		2
6-13x	ZW413190	Adjust. Washer (U) D4x13x0.8t		2
6-14x	ZW330456	Adjust. Washer (U) D4x13x1t		2
6-15x	ZW439547	Adjust. Washer (U) D4x13x1.5t		2
6-16	BC300940	Cabinet	AB-3529	1
6-17x	BC301651	Cabinet BL	AB-3529	1
6-18	ZW548010	Spot Facing Washer	MU-6028	4
6-19	ZS510344	Screw, binding head 4x12		4
6-20	SK300889	Tuning Knob	AB-3530	1
6-21x	SK301682	Tuning Knob (BL)	AB-3530	1
6-22	SK646817	Single Knob	AA-5250	4
6-23x	SK281564	Single Knob (BL)	AA-5250	4
6-24	SK646830	Selector Knob	AA-5253	3
6-25x	SK281586	Selector Knob (BL)	AA-5253	3

When ordering parts, please describe Parts Number, Description, and Model Number in detail.

www.hifiengine.com

[2] AA-1150/BL

7. MULTI FUNCTION P.C BOARD (AB-5001A) BLOCK

Symbol No.	Parts No.	Description	Schematic No.	Q'ty
7-1	BA300732	Multi Function P.C Board Comp. AA-1150	AB-5007	1
7-2	BA303319	Multi Function P.C Board Comp. AA-1150 (CEE)	AB-5007	1
7-IC1	EI697871	IC LA-3122S	45-8-185	1
7-IC2	EI293185	IC LA-1240	45-8-220	1
7-IC3	EI650586	IC LA-1230	45-8-152	1
7-IC4	EI293207	IC LA-3350A	45-8-153	1
7-TR1	ET618873	Transistor 2SC930(E)(F)	45-1-185	1
7-TR2to4	ET635220	Transistor 2SC945L(K)(P)	45-1-85	3
7-D1	ED560913	Silicon Diode 1S2473 VE	45-3-23	1
7-D2to6	ED624903	Silicon Diode 1S2473	45-3-28	5
7-T1	BT444137	Balum Trans. 75 ohms–300 ohms	23-1-129	1
7-T2	EO293387	Osc Coil RWR-42282N	23-4-41	1
7-T3	BT650384	AM-IF Trans. CFU-085-D 468 kHz	23-1-241	1
7-T4	BT293398	AM-IF Trans. 10EZ RMC-42246BCH 468 kHz	23-1-276	1
7-T5	EO650608	Discri Coil MV4-FLC-20000	23-1-243	1
7-L1	EO539820	Peaking Coil 2.2μH(K)	23-1-187	1
7-L2	EO650610	Inductor 144LZ 18μH(J)	23-1-240	1
7-FL1to3	ER650430	Ceramic Filter SFE-10.7 MA-8-Z	53-1-102	3
7-FL4	ER656908	Block Filter FB3201	53-1-103	1
7-VR1	EV550023	Semi-fixed/Vol. V10K8-4-2 100 kB	36-10-250	1
7-VR2	EV499364	Semi-fixed/Vol. V10K8-4-2 5 kB	36-10-250	1
7-VR3	EV484863	Semi-fixed/Vol. V10K8-4-2 1 kB	36-10-250	1
7-SW1	ES301188	Rotary SW. SR26(PH-2)N 2-5-5	25-6-113	1
7-SW2	ES245733	Rotary SW. SR26N 1-2-5 20 kC	25-6-98	1
7-J1	EJ698051	Din Jack	31-1-158	1
7-J2to4	EJ293365	4P Pin Jack	31-1-197	3
7-C12	EC650406	Styrol/C. (Vert. Type) 310PF(J) 50WV	24-11-3	1
7-C25	EC523282	Solid Aluminum/C. (Vert. Type) 0.1μF(M) 25WV	24-19-2	1
7-C41	EC523282	Solid Aluminum/C. (Vert. Type) 0.1μF(M) 25WV	24-19-2	1
7-C46	EC666494	Styrol/C. (Vert. Type) 1500PF(K) 50WV	24-11-3	1
7-C48	EC522167	Solid Aluminum/C. (Vert. Type) 0.22μF(M) 25WV	24-19-2	1
7-C49,50	EC621257	Solid Aluminum/C. (Vert. Type) 0.47μF(M) 25WV	24-19-2	2

8. TONE CONTROL P.C BOARD (AB-5001B) BLOCK

Symbol No.	Parts No.	Description	Schematic No.	Q'ty
8-1	BA301548	Tone Control P.C Board Comp. AA-1150	AB-5012	1
8-TR1,2	ET459810	Transistor 2SC1222(E)(F)	45-1-110	4
8-VR1	EV301168	Single axial 2 throw Vol. V16L4G1Z 250kx2	36-22-29	1
8-VR2	EV301200	Single axial 2 throw Vol. V24L5G3BM 250kx2	36-1-54	1
8-VR3,4	EV301294	Double axial 2 throw Vol. V16L4DG 15C 50kx2	36-18-6	2
8-SW1	ES301169	Push SW. J-P7164#01	25-5-264	1

9. FILTER MUTE P.C BOARD (AB-5001C) BLOCK

Symbol No.	Parts No.	Description	Schematic No.	Q'ty
9-1	BA300728	Filter Mute P.C Board Comp. AA-1150	AB-5009	1
9-TR1,2	ET635220	Transistor 2SC945L(K)(P)	45-1-85	2
9-SW1	ES301299	Push SW.	25-5-263	1
9-VR1	EV301233	Vol. V16L4 100 kB	36-6-27	1

10. MAIN AMP P.C BOARD (A)(AB-3502A)/(B)(AB-3502B) BLOCK

Symbol No.	Parts No.	Description	Schematic No.	Q'ty
10-1	BA301654	Main Amp P.C Board (A) Comp. AA-1150	AB-3557	1
10-2	BA304138	Main Amp P.C Board (A) Comp. AA-1150 (CEE)	AB-3557	1
10-TR1,2	ET293218	Transistor 2SA872(D1,2,3)(E1,2,3)	45-1-260	4
10-TR3	ET240636	Transistor 2SC1940(K)(L)(M)	45-1-241	2
10-TR5	ET300931	Transistor 2SD600K(E)(F)	45-1-278	2
10-TR6	ET301165	Transistor 2SB631K(E)(F)	45-1-277	2
10-TR9	ET300928	Transistor 2SC1890(E)(D)	45-1-279	2
10-TR10	ET557965	Transistor 2SA733(Q)(R)	45-1-124	1
10-TR11to13	ET621235	Transistor 2SC536(E)(F)(G)	45-1-55	3
10-TR14	ET666404	Transistor 2SD571(K)(L)	45-1-218	1
10-TR16	ET219868	Transistor 2SB560(E)(F)	45-1-232	1
10-TR17	ET635218	Transistor 2SC945L(K)(P)(Q)(R)	45-1-85	1
10-TR19	ET557965	Transistor 2SA733(Q)(R)	45-1-124	2
10-D1to5	ED214457	Silicon Diode 1S2472	45-3-41	7
10-D6	ED300829	Zener Diode RD-13E(C)	45-6-72	1
10-D7,8	ED300924	Silicon Diode GP08D	45-2-68	2
10-D9to12	ED245428	Silicon Diode GP30G	45-2-69	4
10-VR1	EV300921	Semi-fixed/Vol. V10K8-1-2 1 kB	36-10-255	2
10-L1,2	EO650823	Phase Compensation Coil 2.2μH(K)	23-1-239	2
10-RL1	EP300917	Relay MU24D2X-O(M)	47-1-34	1
10-R14	ER293580	Carbon/R. (F) 1/4W 4.7 ohms(J)	35-11-12	2
10-R15,16	ER663614	Carbon/R. (F) 1/4W 150 ohms(J)	35-11-12	4
10-R17	ER293580	Carbon/R. (F) 1/4W 4.7 ohms(J)	35-11-12	2
10-R18,19	ER653567	Cement/R. (Wire-wound Type) 5W 0.47 ohms(K)	35-16-3	4
10-R24,25	ER666224	Carbon/R. (F) 1/2W 10 ohms(J)	35-11-13	2
10-R31,32	ER666224	Carbon/R. (F) 1/2W 10 ohms(J)	35-11-13	2
10-R41	ER389687	Metal Oxide Film/R. 1W 220 ohms(K)	35-15-10	1
10-R45,46	ER409814	Metal Oxide Film/R. 2W 220 ohms(K)	35-15-8	2
10-C1	EC621257	Solid Aluminum/C. (Vert. Type) 0.47μF(M) 25WV	24-19-2	2
10-C16	EC662128	Solid Aluminum/C. (Vert. Type) 2.2μF(M) 25WV	24-19-2	1
10-C27,28	EC204671	Ceramic/C. DD31-6 0.01μF(P) 500WV	24-5-66	2
10-C30to33	EC204671	Ceramic/C. DD31-6 0.01μF(P) 500WV	24-5-66	4
10-3	BA300389	Main Amp P.C Board (B) Comp. AA-1135	AB-3557	1

www.hifiengine.com

11. ILLUSTRATION OF ASSEMBLY BLOCK

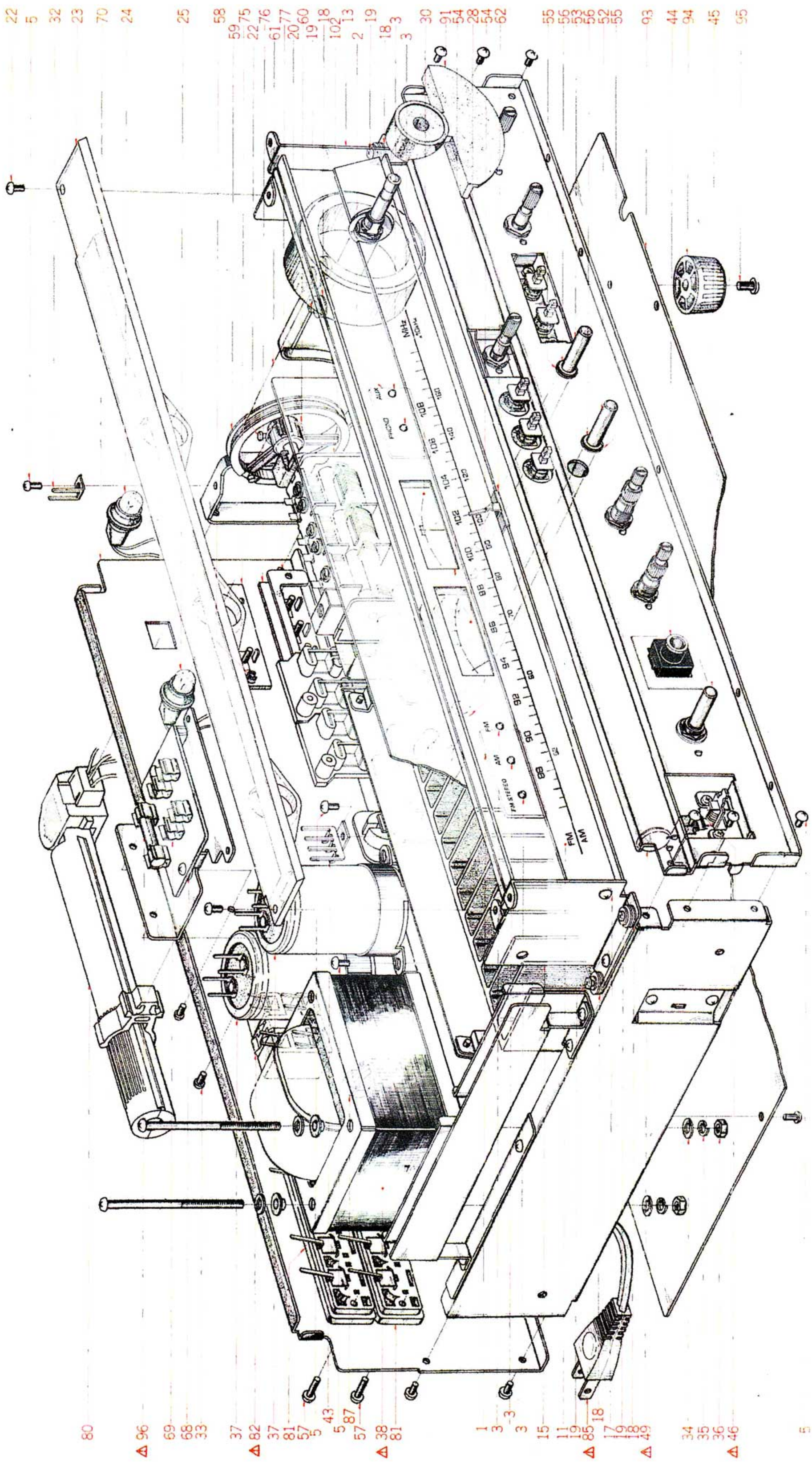

11) ASSEMBLY BLOCK

Ref. No.	Parts No.	Description	Schematic No.	Q'ty
		LED P.C BOARD BLOCK		
11-1	BA300729	LED P.C Board Comp. AA-1150(A)	AB-5010	1
11-2	BA300730	LED P.C Board Comp. AA-1150(B)	AB-5011	1
11-3	ED698826	LED SR-105D	45-15-16	5
11-4x	ZW632226	Insulator Washer, Bush M	45-16-27	5
		MAIN AMP BLOCK		
11-5	ZS325495	Tapping Screw #2, 3x6(BR)		55
11-6x	ET302715	Transistor 2SD588(Q)(R)	45-1-276	2
11-7x	ET302716	Transistor 2SB618(Q)(R)	45-1-275	2
11-8x	ET452531	Transistor 2SD313(E)(F)	45-1-105	2
11-9x	ZW632226	Insulator Washer, Bush M	45-16-27	2
11-10x	ZS421806	Screw, pan head 3x8		10
		SCALE PLATE BLOCK		
11-11	TA301024	Scale Plate (B)	AB-3525/3526	1
11-12x	TA303290	Scale Plate (D) (BL)	AB-3525/3526	1
11-13	TA300904	Scale Holder (A)	AB-3512	1
11-14x	TA301650	Scale Holder (A-BL)	AB-3512	1
11-15	TA300905	Scale Holder (B)	AB-3513	1
11-16x	TA301649	Scale Holder (B-BL)	AB-3513	1
11-17	ZS447840	Tapping Screw #2, 3x8 (BR)		6
11-18	MR530662	Roller B	91-5009	6
11-19	ZS530673	Roller Screw A	91-5010	6
11-20	TA301772	Tuning Wheel Part-G	13-2-34	1
11-21x	ZW259514	Washer (Nylon) D3.1x8x1t		2
11-22	ZS379350	Screw, panhead 3x6		14
11-23	SM300915	Illumination Plate	AB-3524	1
11-24	EL301185	Lamp 8V 300MA(400MMx2)	28-2-60	1
11-25	EL301191	Lamp 8V 300MA(500MMx2)	28-2-60	1
11-26x	EL301204	Lamp 8V 300MA(600MMx2)	28-2-60	1
11-27x	ZW259514	Washer (Nylon) D3.1x8x1t		4
11-28	EM204344	Signal Meter KL-243X-9	46-1-127	1
11-29x	EM300355	Signal Meter KL-243X-26 (BL)	46-1-165	1
11-30	EM204355	Tuning Meter KL-243X-10	46-1-128	1
11-31x	EM300354	Tuning Meter KL-243X-27 (BL)	46-1-163	1
		ASSEMBLY BLOCK		
11-32	EJ539447	Earth Terminal 2P, T4460	32-1-32	1
11-33	ZS447761	Tapping Screw #2, 3x6 (BR) (Black)		14
11-34	ZW575774	Washer (SPC) D4.5x9.8x0.7t		4
11-35	ZW273914	Spring Washer		4
11-36	ZW273960	Nut M4		4
11-37	EC301298	Elect./C. 10,000μF 50WV	24-10-119	2
11-38	BT301239	⚠ Power Trans. AA-1150T-70	38-4-524	1
11-39x	BT301236	⚠ Power Trans. AA-1150T-30 (CSA)	38-4-521	1
11-40x	BT301234	⚠ Power Trans. AA-1150T-20 (AAL)	38-4-520	1
11-41x	BT301237	⚠ Power Trans. AA-1150T-40 (CEE)	38-4-522	1
11-42x	BT301238	⚠ Power Trans. AA-1150T-50 (BEAB)	38-4-523	1
11-43	EJ551035	Wrapping Terminal, 4P T-5251	32-1-36	1
11-44	EJ301199	Headphone Jack 3P64M	31-2-83	1
11-45	ES301166	Rotary SW. SR321N1-2-4	25-7-48	1
11-46	ES224436	⚠ Push SW. JP01	25-5-221	1
11-47x	ES239218	⚠ Push SW. JP01 (TV-4)(CSA)	25-5-222	1
11-48x	ES242346	⚠ Push SW. JP17 (CEE)	25-5-224	1
11-49	EC684720	⚠ Ceramic/C. CLD16YE 0.01μF(P) 500WV	24-5-61	1
11-50x	EC286198	⚠ Ceramic/C. AL-10 0.01μF(Z) 125WV (CSA)	24-5-69	1
11-51x	EC301320	⚠ MP/C. PME271Y447 4700PF 250WV (CEE)	24-9-118	2
11-52	MS300898	Relay Shaft (B)	AB-3538	1

Ref. No.	Parts No.	Description	Schematic No.	Q'ty
11-56	ZW270123	'E' Ring 4M	6-1-9	4
11-57	ZS522865	Tapping Screw #2, 3x12(BR)		10
11-58	ZW698308	Nylon Rivet (FNPR) 3x5.5 (Black)	2-7-54	3
11-59	MI301149	Dial Wheel AA-1135	2-15-17	1
11-60	ZG300891	Dial Wheel Spring	AB-3533	1
11-61	TA207347	Thread D0.5 2m		1
11-62	TA300414	Pointer Part AA-1135	AB-3534	1
11-63x	ZW288786	Earth Lug M3, (BSP) 0.8t (CSA, AAL)		1
11-64x	ZS417150	Screw, pan head 4x6 (CEE, BEAB)		1
11-65x	ZW273892	Toothed Lock Washer (CEE, BEAB)		1
11-66x	ZW273881	Earth Lug (CEE, BEAB)		1
11-67x	ZW416698	Nut M4 (CEE, BEAB)		1
		FUSE P.C BOARD BLOCK		
11-68	BA301554	Fuse P.C Board Comp. AA-1150 (U/T)	AB-5013	1
11-69	EJ514822	Fuse Holder, P.C Board S-N5051	40-1-28	6
		REAR PANEL BLOCK		
11-70	SP300955	Rear Panel (6)	AB-5002	1
11-71x	SP300956	Rear Panel (7) (CSA)	AB-5002	1
11-72x	SP300957	Rear Panel (8) (AAL)	AB-5003	1
11-73x	SP300950	Rear Panel (9) (CEE)	AB-5003	1
11-74x	SP300951	Rear Panel (10) (BEAB)	AB-5004	1
11-75	EJ293646	3P Antenna Terminal Plate	32-1-78	1
11-76	EJ302685	2P Antenna Terminal Plate	32-1-82	1
11-77	ML300879	Earth Parts	AB-3517	1
11-78x	ZS355522	Screw, pan head 3x6		4
11-79x	ZW562476	Earth Lug M3		1
11-80	EE299621	Bar Antenna	55-1-49	1
11-81	EJ240581	4P Push Terminal	32-1-72	2
11-82	EZ225145	⚠ 2 throw AC Outlet (U/T, CSA, AAL)	31-1-166	1
11-83x	EJ296853	⚠ 3P Inlet CM-3 (CEE, BEAB)	31-1-199	1
11-84x	ZS463353	Tapping Screw #2, 3x8 (BR) (CEE, BEAB)		2
11-85	EW374894	⚠ AC Cord CUL 3M	26-3-19	1
11-86	EW207742	⚠ AC Cord CUL (CSA, AAL)	26-3-45	1
11-87	EZ631945	Strain Relief SR-4N-4	2-7-49	1
11-88x	EJ301150	Fuse Holder AA-50L (CSA, AAL)	40-1-152	1
11-89x	EJ303142	Fuse Holder AA-50S1 (CEE)	40-1-153	1
11-90x	EJ303143	Fuse Holder AA-50S2 (BEAB)	40-1-159	1
11-91	SE300910	Nut Cover	AB-3518	1
11-92x	SE301680	Nut Cover (BL)	AB-3518	1
11-93	SP300914	Bottom Plate	AB-3523	1
11-94	SZ645243	Circular Foot A CA	CA-6014	4
11-95	ZS565942	Tapping Screw #2, 4x8 (Pan)		4
11-96	EF575223	⚠ Fuse 5A 250V	39-1-50	1
11-97x	EF277402	⚠ Fuse ST-2 1A (CSA, AAL)	39-1-63	2
11-98x	EF459843	⚠ Fuse ST-2 5A (CSA, AAL)	39-1-63	1
11-99x	EF623103	⚠ Fuse (SEMKO T Type) 1AT	39-1-53	2
11-100x	EF668474	⚠ Fuse (SEMKO T Type) 400MAT (CEE, BEAB)	39-1-53	1
11-101x	EF249851	⚠ Fuse (SEMKO T Type) 5AT (CEE, BEAB)	39-1-53	2
11-102	EE301242	Front End FB621U19	57-2-45	1

www.hifiengine.com

INDEX

Parts No.	Ref. No. & Symbol No.	Parts No.	Ref. No. & Symbol No.	Parts No.	Ref. No. & Symbol No.	Parts No.	Ref. No. & Symbol No.	Parts No.	Ref. No. & Symbol No.
ZW439547	12-15x								
ZW562476	5-77x								
ZW562476	11-79x								
ZW548010	6-18								
ZW548010	12-18								
ZW575774	5-37								
ZW575774	11-34								
ZW603797	6-12x								
ZW603797	12-12x								
ZW632226	5-8x								
ZW632226	11-4x								
ZW632226	11-9x								
ZW652408	5-79								
ZW698308	5-56								
ZW698308	11-58								

SECTION 3

SCHEMATIC DIAGRAM

1. AA-1135 SCHEMATIC DIAGRAM No. 2-1 1542442A
2. AA-1150 SCHEMATIC DIAGRAM No. 2-2 1542443A

www.hifiengine.com

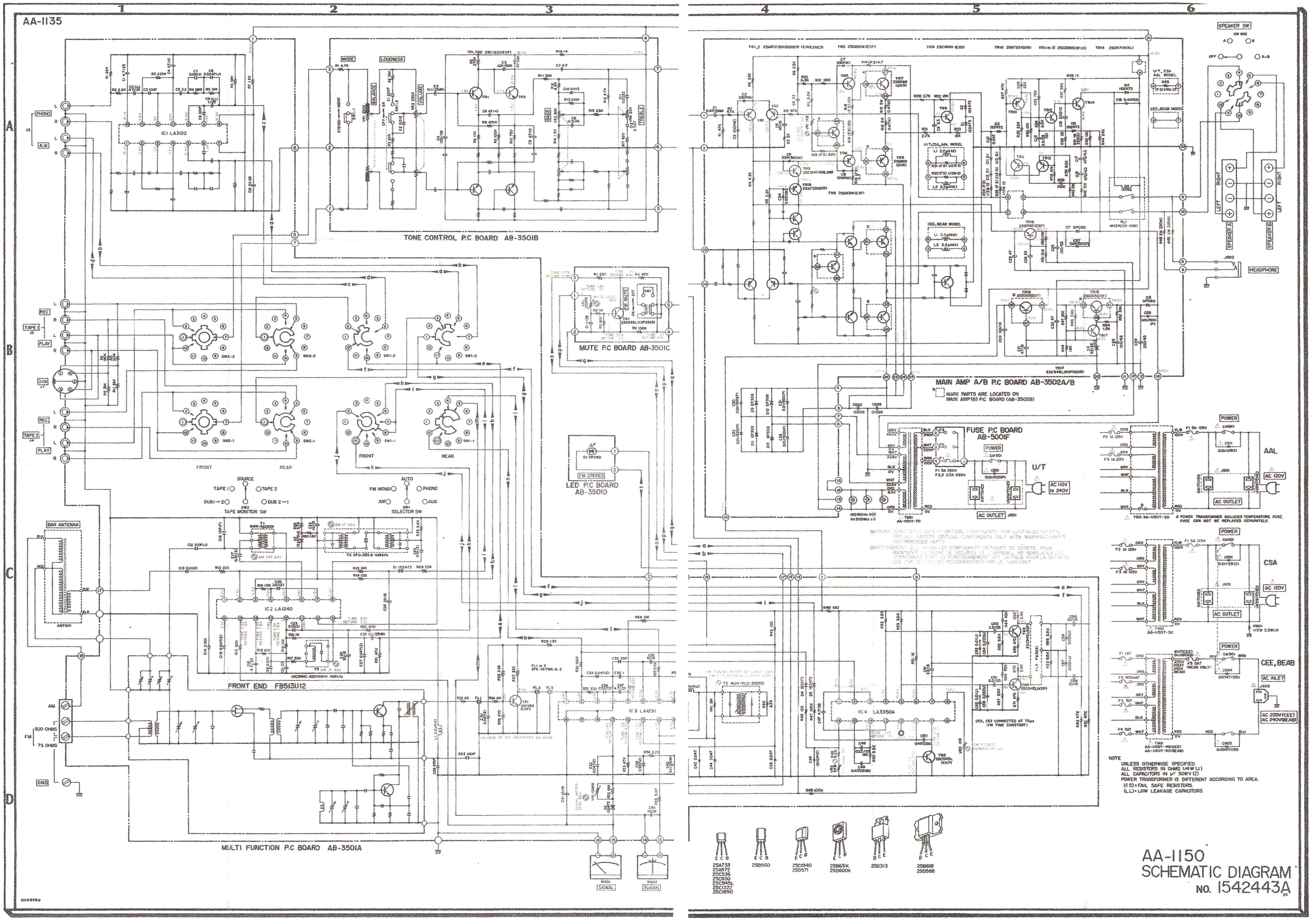
AA-1135
TONE CONTROL P.C BOARD AB-3501B
MUTE P.C BOARD AB-3501C
LED P.C BOARD AB-3501D
MAIN AMP A/B P.C BOARD AB-3502A/B
MARK PARTS ARE LOCATED ON MAIN AMP(B) P.C BOARD (AB-3502B)
FUSE P.C BOARD AB-5001F
MULTI FUNCTION P.C BOARD AB-3501A
FRONT END FB513U12
IC1 LA3122
IC2 LA1240
IC3 LA1230
IC4 LA3350A
SPEAKER SW
HEADPHONE
AAL
CSA
CEE, BEAB
AC OUTLET
AC INLET
U/T
BAR ANTENNA
SOURCE
TAPE TAPE MONITOR SW
SELECTOR SW
NOTE
UNLESS OTHERWISE SPECIFIED
ALL RESISTORS IN OHMS 1/4W (J)
ALL CAPACITORS IN μF 50W (Z)
POWER TRANSFORMER IS DIFFERENT ACCORDING TO AREA.
(F.S)=FAIL SAFE RESISTORS.
(L.L)=LOW LEAKAGE CAPACITORS.
2SA733 2SA872 2SC536 2SC930 2SC945L 2SC1222 2SC1890
2SB560
2SC1940 2SD571
2SB631K 2SD600K
2SD313
2SB618 2SD598
AA-1150
SCHEMATIC DIAGRAM
No. 1542443A

AA-1135/1150 (0072)

To improve performance, Multi Function P.C Board resistor R7 RD1/4W 1.5 kohms(J) has been changed to RD1/4W 2.7 kohms(J).

Change from: Serial No. 30251-0001

AA-1135/BL, AA-1150/BL (0073)

To improve Tuning Meter function, Resistor RD1/4W 1.5 kohms(J) has been added to the Multi Function P.C Board.

Change from: AA-1135/BL Serial No. 30450-00001

AA-1150/BL Serial No. 30455-00001

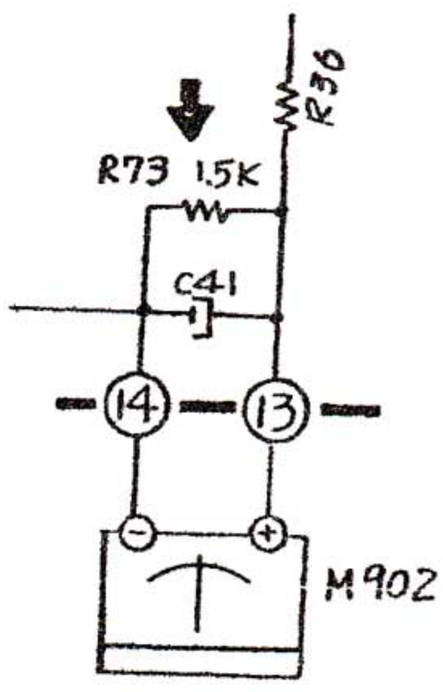

AA-1135/BL

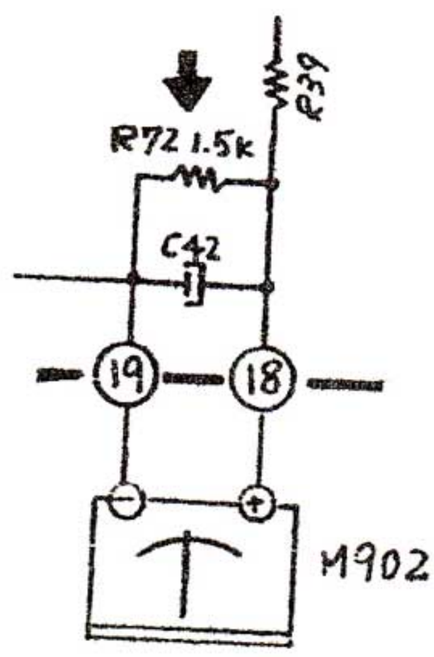

AA-1150/BL

AA-1150/BL (0079)

To conform to the CSA Safety Regulation, the power switch in the CSA model has been changed as follows.

Old: ES239218 Push SW. JP01 (TV-4) ¥120.

New: ES293703 Push SW. SDV1P (TV-5) ¥100.

Interchangeability: Yes.

Change from: Serial No. 30922-00101.

www.hifiengine.com

AA-1135L (0079)

To prevent damaging of IC4 (LA5630) on the Touch Sensor P.C Board, an additional silicon diode D2 1S2473, and resisotr R37 Carbon/R. 1/4W, 33 kohms (J) have been placed as shown below.

Change form: Serial No. 30941-16101.

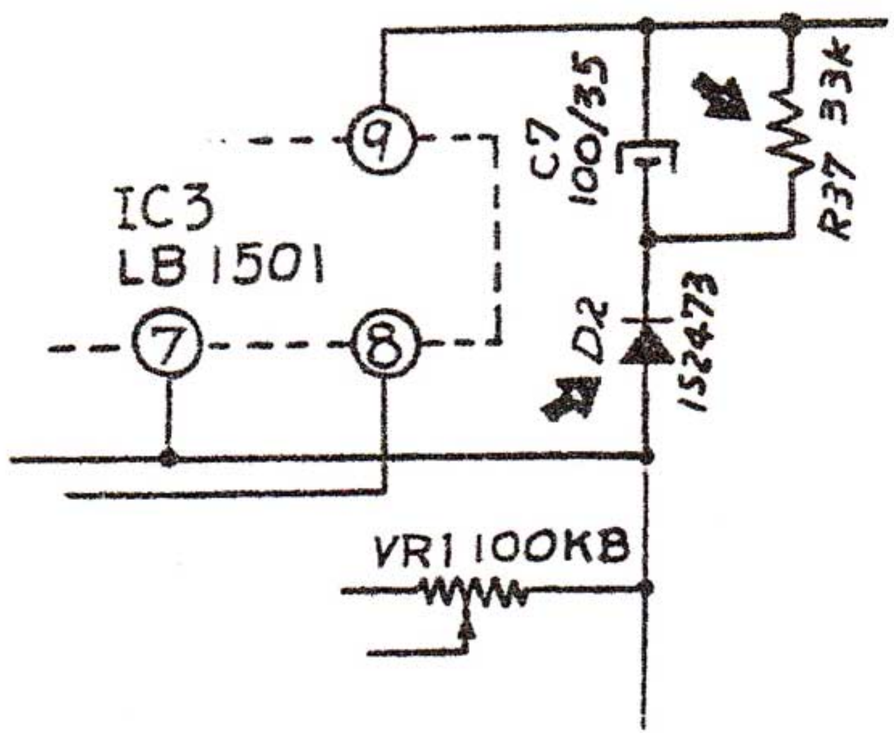

www.hifiengine.com