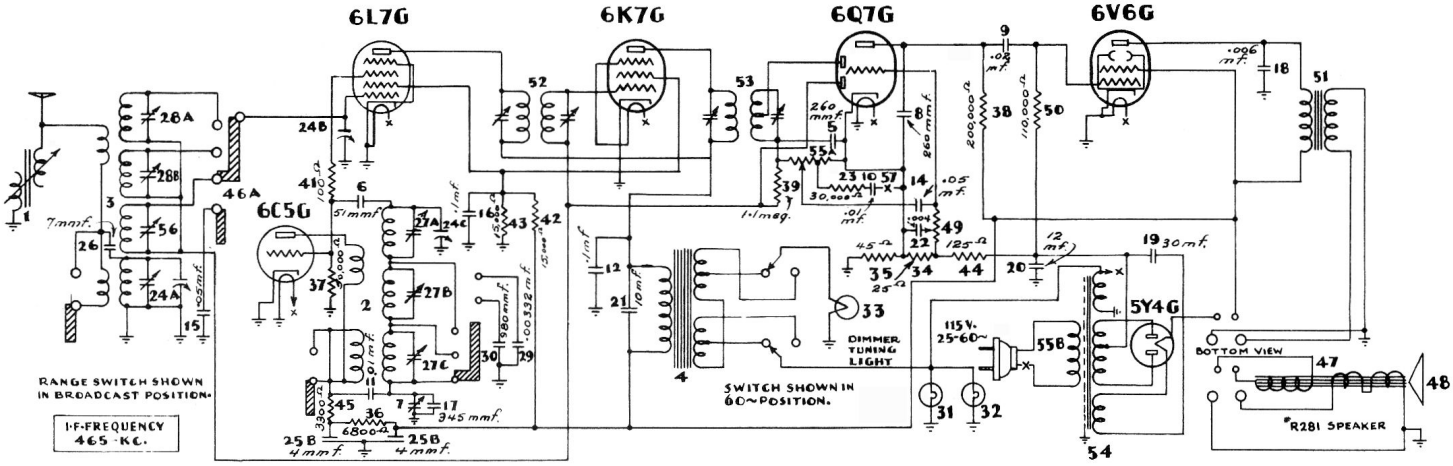

MODEL R-412 "MAJOR

I.F. = 465 Kc. 1938-39

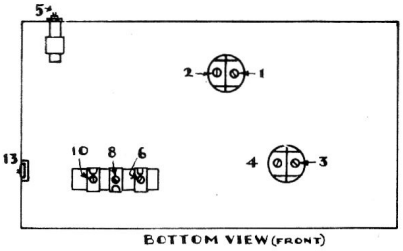

ALIGNMENT EQUIPMENT & PROCEDURE

For alignment, an output meter and an accurately calibrated signal generator with a tuning range from 465 KC. to 16.0 MC. are required.

1. Connect the output meter across the voice coil or between the plate of the 6V6G tube and ground, depending on the type of meter. (The more sensitive type should be connected across the voice coil.)
2. Connect the ground lead of the signal generator to the chassis of the receiver.
3. Turn the volume control to the maximum volume position and keep it in this position throughout the entire alignment procedure.
4. With the gang condenser in full mesh set the pointer on the last scale division on the low frequency end of the dial. This may be accomplished by releasing the clip on the pointer slider; where it attaches to the dial cord.

IMPORTANT:—THE BROADCAST BAND MUST BE ALIGNED AFTER THE SHORT-WAVE BAND.

DUMMY ANT. IN SERIES WITH SIG. GEN.	CONNECTION OF SIG. GENERATOR OUTPUT TO RECEIVER	SIGNAL GENERATOR FREQUENCY	RANGE SWITCH POSITION	RECEIVER DIAL SETTING	TRIMMER NUMBER	TRIMMER DESCRIPTION	TYPE OF ADJUSTMENT
.1 MFD CONDENSER	CONTROL GRID OF 6L7G TUBE	465 KC.	BROADCAST (Clockwise)	ANY POINT WHERE IT DOES NOT AFFECT THE SIGNAL	1 - 2	1ST I.F.	ADJUST FOR MAXIUM OUTPUT. THEN REPEAT ADJUSTMENT.
					3 - 4	2ND I.F.	
400 OHM CARBON RESISTOR	ANTENNA TERMINAL	465 KC.	BROADCAST (Clockwise)	ANY POINT WHERE IT DOES NOT AFFECT THE SIGNAL	5	WAVE TRAP	ADJUST FOR MINIMUM OUTPUT USING A STRONG GENERATOR SIGNAL.
400 OHM CARBON RESISTOR	ANTENNA TERMINAL	16 MC.	SHORT-WAVE (Counter-clockwise)	16 MC.	6	SHORT-WAVE OSCILLATOR	ADJUST TO BRING IN SIGNAL. CHECK TO SEE IF PROPER PEAK WAS OBTAINED BY TUNING IN IMAGE AT APPROX. 15.1 KC. IF IMAGE DOES NOT APPEAR REALIGN AT 16 MC. WITH TRIMMER SCREW FARTHER OUT. RECHECK IMAGE.
400 OHM CARBON RESISTOR	ANTENNA TERMINAL	16 MC.	SHORT-WAVE (Counter-clockwise)	TUNE TO 16 MC. GENERATOR SIGNAL	7	SHORT-WAVE ANTENNA	ADJUST FOR MAXIMUM OUTPUT. TRY TO INCREASE OUTPUT BY DETUNING TRIMMER AND RETUNING RECEIVER DIAL UNTIL MAXIMUM OUTPUT IS OBTAINED.
400 OHM CARBON RESISTOR	ANTENNA TERMINAL	5.0 MC.	POLICE (Center)	5.0 MC.	8	POLICE OSCILLATOR	ADJUST TO BRING IN SIGNAL. CHECK TO SEE IF PROPER PEAK WAS OBTAINED BY TUNING IN IMAGE AT APPROX. 4.1 MC. IF IMAGE DOES NOT APPEAR REALIGN AT 5.0 MC. WITH TRIMMER SCREW FARTHER OUT. RECHECK IMAGE
400 OHM CARBON RESISTOR	ANTENNA TERMINAL	5.0 MC.	POLICE (Center)	TUNE TO 5.0 MC. GENERATOR SIGNAL	9	POLICE ANTENNA	ADJUST FOR MAXIMUM OUTPUT. TRY TO INCREASE OUTPUT BY DETUNING TRIMMER AND RETUNING RECEIVER DIAL UNTIL MAXIMUM OUTPUT IS OBTAINED.
400 OHM CARBON RESISTOR	ANTENNA TERMINAL	1500 KC.	BROADCAST (Clockwise)	1500 KC.	10	BROADCAST OSCILLATOR (Shunt)	ADJUST TRIMMER TO BRING IN SIGNAL.
400 OHM CARBON RESISTOR	ANTENNA TERMINAL	1500 KC.	BROADCAST (Clockwise)	TUNE TO 1500 KC. GEN.SIG.	11	ANTENNA	ADJUST FOR MAXIMUM OUTPUT.
					12	DETECTOR	
400 OHM CARBON RESISTOR	ANTENNA TERMINAL	600 KC.	BROADCAST (Clockwise)	TUNE TO 600 KC. GENERATOR SIGNAL	13	BROADCAST OSCILLATOR (Series Pad)	ADJUST FOR MAXIMUM OUTPUT. TRY TO INCREASE OUTPUT BY DETUNING TRIMMER AND RETUNING RECEIVER DIAL UNTIL MAXIMUM OUTPUT IS OBTAINED.

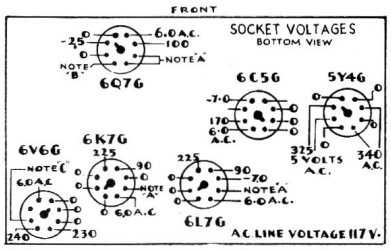

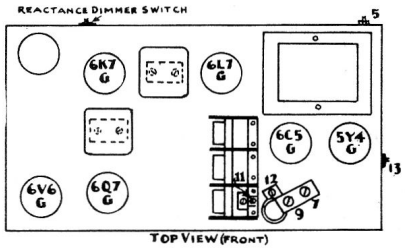

IMPORTANT: USE A HIGH RESISTANCE VOLTMETER OF 1,000 OHMS PER VOLT

NOTE "A": THE BIAS FOR THE CONTROL GRIDS OF THE 6L7G, 6K7G, & THE DIODE PLATES OF THE 6Q7G IS -2.5 VOLTS MEASURED ACROSS RESISTOR 35.

NOTE "B": THE BIAS FOR THE CONTROL GRID OF THE 6Q7G IS -4 VOLTS MEASURED ACROSS RESISTORS 34+35.

NOTE "C": THE BIAS FOR THE CONTROL GRID OF THE 6V6G TUBE (OUTPUT) IS -14 VOLTS MEASURED ACROSS RESISTORS 34, 35, +44.

VOLTAGES MEASURED BETWEEN SOCKET TERMINALS AND CHASSIS.

DATA SHEET STEWART-WARNER-54