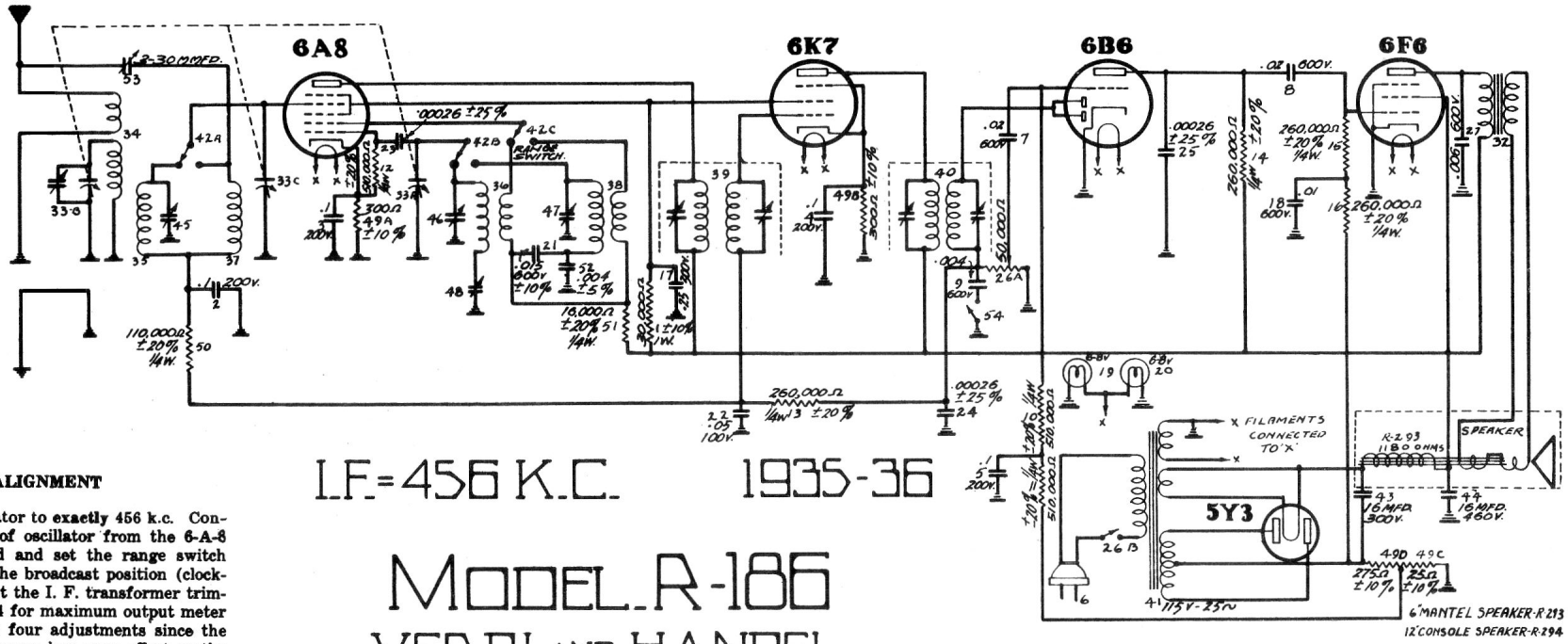


# I.F.=456 K.C. 1935-36

# MODEL R-186

## VERDI AND HANDEL

### I. F. ALIGNMENT

1. Set the test oscillator to **exactly** 456 k.c. Connect the output leads of oscillator from the 6-A-8 control grid to ground and set the range switch (right-hand knob) to the broadcast position (clockwise). Carefully adjust the I. F. transformer trimmers Nos. 1, 2, 3, and 4 for maximum output meter deflection. Repeat the four adjustments since the adjustment of each trimmer has some effect on the others.

### BROADCAST BAND ALIGNMENT

1. Check the position of the dial on the condenser shaft by pushing the rotor plates of the gang condenser to full mesh. The dial should then read 530 k.c. Please note that the plates should be pushed with the fingers and not turned by means of the dial for this check.

2. Turn the range switch (right-hand knob) to the maximum clockwise position, which is the broadcast setting.

3. Whenever possible, use a broadcast station signal between 1300 and 1420 k.c. to calibrate the receiver dial. If no such station can be heard, you can use a 1400 k.c. signal from your oscillator, provided that it is properly calibrated. To calibrate the set, turn its dial to the exact frequency setting of the signal (either a station or the oscillator) then carefully adjust trimmer No. 5 (broadcast oscillator shunt trimmer) until the signal is tuned in with maximum volume at its correct frequency setting.

4. Connect a 400 or 500 ohm, 1 watt carbon resistor in series with the test oscillator output and the receiver antenna lead. **This resistor must remain connected for all broadcast and short-wave adjustments in order to secure proper alignment of the antenna stage. Ground the receiver chassis and connect the oscillator ground lead to the chassis.**

5. Set the test oscillator to approximately 1400 k.c. and carefully tune the receiver to the signal. Adjust trimmer No. 6 (broadcast detector shunt trimmer) and trimmer No. 7 (broadcast pre-selector shunt trimmer) for maximum meter reading. Retune the receiver and check the adjustments. Do not touch trimmer No. 5 since this will change the calibration.

6. Set the test oscillator to approximately 600 k.c. and tune the receiver to the signal. Adjust trimmer No. 8 (broadcast oscillator padding trimmer) to get maximum output meter deflection. Retune the receiver dial to a peak and readjust the trimmer. Continue this procedure of adjusting the trimmer and retuning the set until the output meter reading cannot be increased. **This procedure must be followed or the receiver will not be properly aligned.**

7. With a 1400 k.c. test oscillator signal, check alignment of trimmers No. 6 and 7.

### SHORT-WAVE BAND ALIGNMENT

1. Turn the receiver range switch to the short-wave band position (counter-clockwise).

2. Set the test oscillator to give a 20 meter (15,000 k.c.) signal. If your oscillator cannot reach this frequency, use the second harmonic of 7,500 k.c., the third harmonic of 5,000 k.c., or the fourth harmonic of 3,500 k.c.. all of which will give a 15,000 k.c. signal (or 20 metres).

| LINE VOLTAGE 115 A.C. | VOLTAGE TABLE | | | VOLUME CONTROL FULL ON. | |
|---|---|---|---|---|---|
| TUBE | POSITION IN CIRCUIT | FILAMENT | PLATE | SCREEN GRID | CATHODE (BIAS) |
| 6A8 | OSC. DET. | 6.25 | 180 DET. 115 OSC. | 100 | 2.8 |
| 6K7 | I.F. | 6.25 | 250 | 100 | 2.8 |
| 6B6 | 2ND A.V.C. AUDIO | 6.25 | 125 | 0 | 0 |
| 6F6 | OUTPUT | 6.25 | 240 | 250 | 17.5 |
| 5Y3 | RECT. | 4.95 | — | — | — |

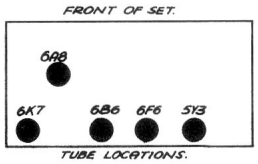

TUBE LOCATIONS.

3. To calibrate this point, turn the receiver dial to 15 meters on the inner dial scale and adjust trimmer No. 9 (shortwave oscillator shunt trimmer) to give maximum output. Generally two peaks will be found. Align on the peak secured with the trimmer screw farthest out. Then adjust trimmer No. 10 (short-wave detector shunt trimmer) to a peak. After this is done, try detuning No. 10 in either direction and retune the receiver dial. If this gives a higher output, continue detuning No. 10 and retuning the dial until the maximum output meter reading is reached. If this procedure results in a lower output, detune the trimmer in the opposite direction and retune the dial, etc.

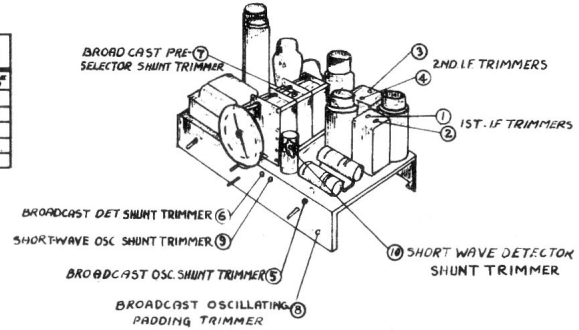


4. Tune the receiver to about 21 meters, and check for the image signal which should be weaker than the 20 meter signal. If the image is as strong as the signal it shows that trimmer No. 10 is not properly adjusted. No signal at 21 meters but one at 19 meters shows that trimmer No. 9 is aligned on the image frequency and thus both No. 9 and 10 must be readjusted at the proper frequency.

**Note:** After completing the alignment, all of the trimmers except the padding trimmers should be locked in place with Ambroid or some similar type cement in order that they will not be jarred out of adjustment.

If the 6-A-8 and 6-K-7 type tubes are interchanged with the all-metal type, it is usually necessary to realign the receiver. Other tubes can be interchanged without realignment.

COURTESY STEWART-WARNER-30 ALEMITE CORP. LTD.
DATA SHEET
PRINTED IN CANADA

RCC - Stewart-Warner Data Sheet 30 - 1935 - 36