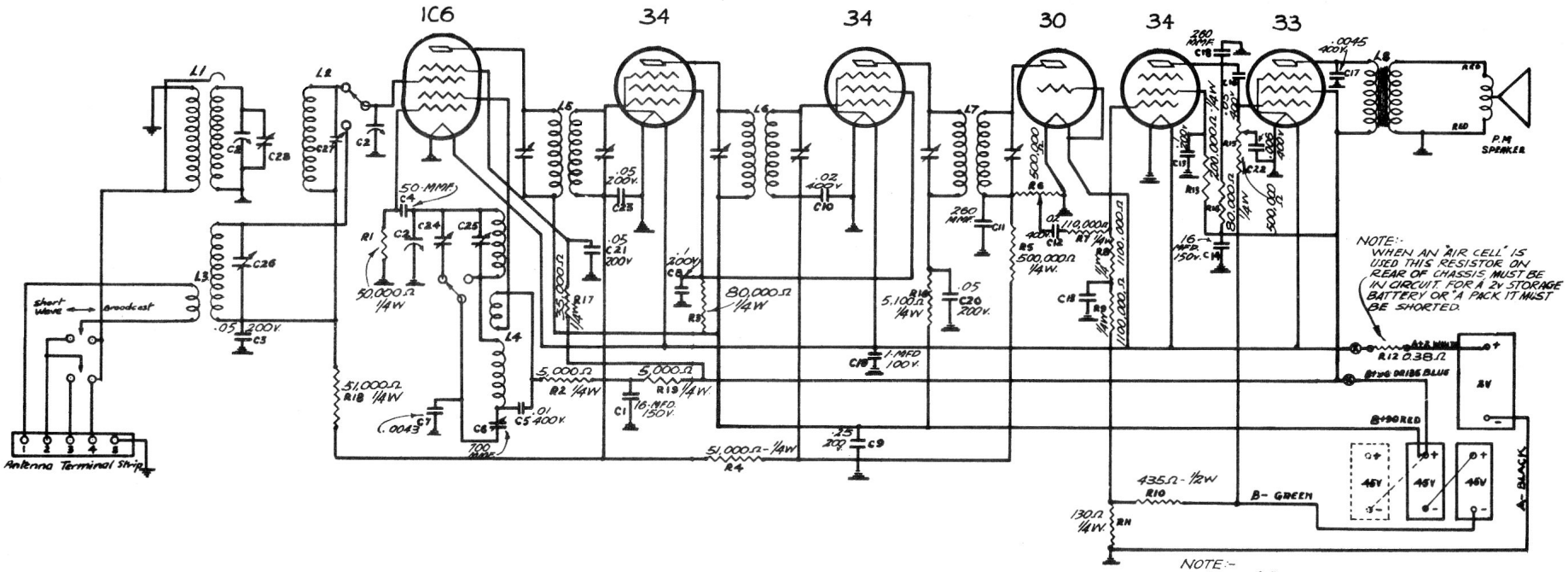

NOTE:- WHEN AN "AIR CELL" IS USED THIS RESISTOR ON REAR OF CHASSIS MUST BE IN CIRCUIT FOR A 2V STORAGE BATTERY OR "A" PACK IT MUST BE SHORTED.

NOTE:- IF THREE "B" BATTERIES ARE USED, CONNECT THE THIRD BATTERY AS SHOWN IN DOTTED LINES & MOVE THE (B+90 OR 136) LEAD OVER TO ITS POSITIVE TERMINAL OF THE SECOND BATTERY.

MODEL R-182X

BATTERY-OPERATED DOVER AND CALAIS

-ALIGNMENT INSTRUCTIONS-

Service Data—The following data is placed in this instruction book for the service man's use in case, on some occasion, he may not be supplied with a copy thereof.

If the receiver lacks sensitivity and the tubes and their voltages have checked O.K. (see voltage chart accompanying circuit diagram) proceed to check the alignment as follows.

Alignment—The alignment operation can all be performed **without removing** the chassis from the cabinet.

(a) Connect an output meter to the speaker terminals or between plate and screen of the output tube.

(b) Connect a 370 K.C. oscillator between the **grid cap** of the 1C6 first detector and ground. Make sure that there is a condenser (approximately .02mfd) in the oscillator leads so that the 1-C-6 grid is not shorted to the ground and the bias upset.

(c) With the volume control full on, align the I.F. stages beginning with the last and working forward, keeping the input signal low enough so that the lowest practical output reading is obtained. Particular care must be taken in aligning the I.F. because these circuits are very selective. If the alignment was very far out repeat the above operation. This alignment should be carried out with the range switch in the "broadcast band" position and the gang condenser set about 1400 K.C.

(d) Transfer the oscillator leads to the antenna and ground and tune it to 1400 K.C. With the range switch in the "broadcast position" set the dial on the receiver to 1400 K.C. and adjust C24, C27 and C28 in that order for maximum output. Keep the input from the oscillator as low as possible as before.

(e) Adjust the receiver and oscillator in tune at 550 K.C. and align C6 for maximum output, rocking the tuning condenser back and forth slightly while aligning.

(f) If an appreciable change in C6 was necessary operation (d) should be repeated.

(g) Turn the range switch to the short wave position and adjust the oscillator and tuning condenser in tune at 15 megacycles (20 meters). A fairly strong 20 meter signal will be received at two points on the dial: set the dial at the lowest wave length point.

(h) Adjust C25 and C26 in that order for maximum output.

NOTE—A bakelite screw driver must be used for adjusting C24 and C25.

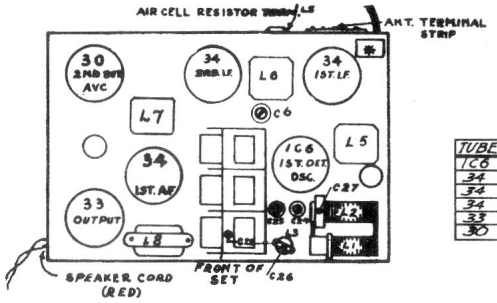

I.F. = 370 K.C.

1935-36

TUBE	CIRCUIT LOCATION	FIL	PLATE	SCREEN	BIAS
1C6	1ST. DET. OSC.	2	81-OSC 65	40	0
34	1ST. I.F.	2	81	25	0
34	2ND. I.F.	2	76	25	0
34	1ST. AUDIO	2	27	20	-2≠
33	OUTPUT	2	76	82	-8.5*
30	2ND. DET.	2	—	—	+2

MEASURED WITH A 1000 OHMS PER VOLTMETER.
≠ MEASURED ACROSS R11.
* MEASURED FROM (B-) TO GROUND.
ALL VOLTAGES MEASURED FROM TUBE SOCKET TO GROUND USING 90 VOLTS OF "B" BATTERY AND ANTENNA SHORTED TO GROUND.
"A" BATTERY CURRENT = .62 AMP.
"B" BATTERY CURRENT - 15 MA. WITH 90V & 23 MA. WITH 135V.

PRINTED IN CANADA

COURTESY-

DATA SHEET STEWART-WARNER-26

ALNITE CORP. LTD.

RCC - Stewart-Warner Data Sheet 26 - 1935 - 36