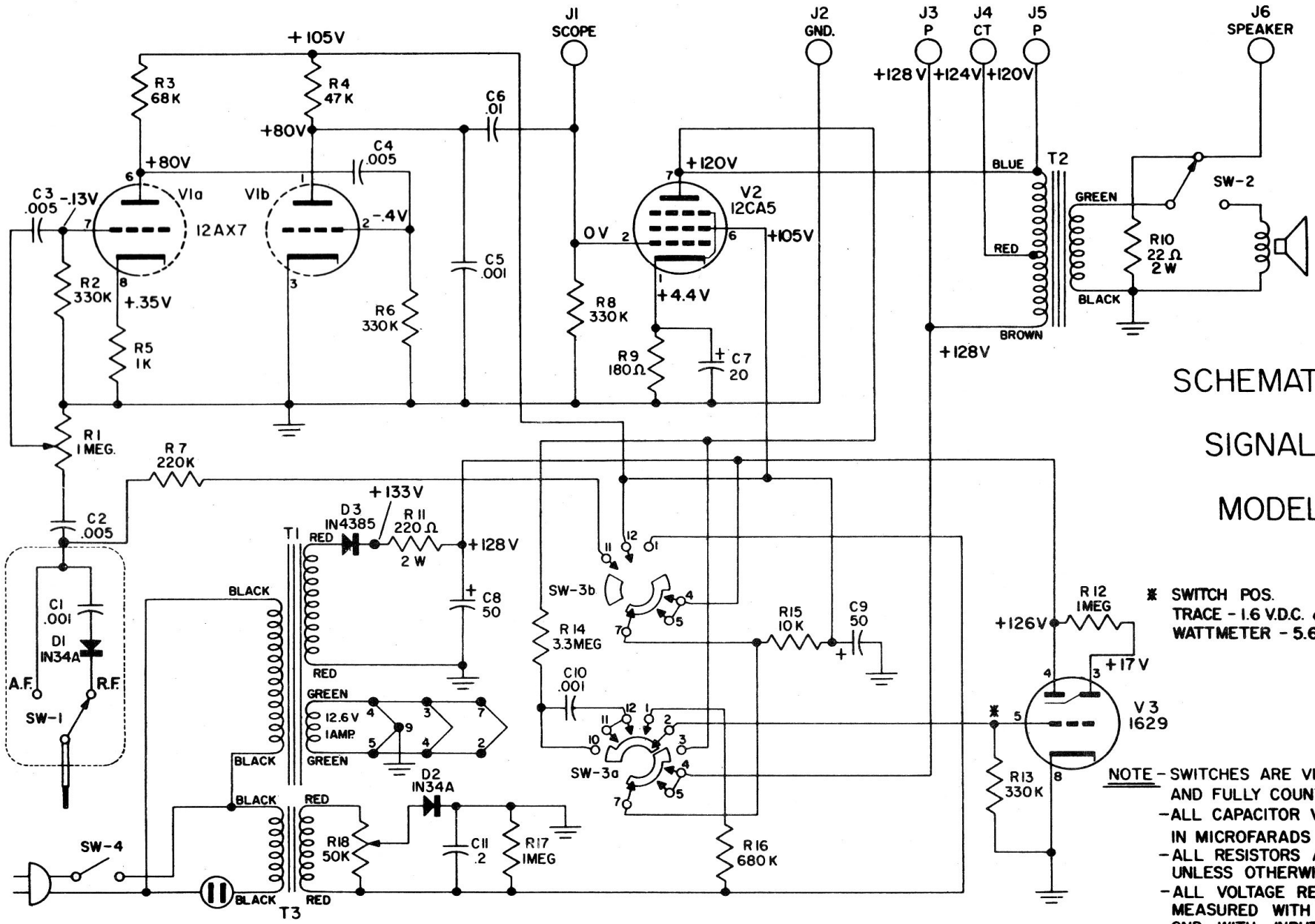
+105V
R3 68K
R4 47K
+80V
C6 .01
C4 .005
+80V
C3 .005
-.13V
V1a
V1b
12AX7
-.4V
R2 330K
+.35V
R5 1K
R6 330K
C5 .001
J1 SCOPE
J2 GND.
J3 P
J4 CT
J5 P
J6 SPEAKER
+128V
+124V
+120V
+120V
V2 12CA5
0V
+105V
+4.4V
R8 330K
R9 180Ω
C7 20
BLUE
T2
GREEN
RED
BROWN
BLACK
R10 22Ω 2W
SW-2
+128V
R1 1MEG.
R7 220K
C2 .005
+133V
D3 IN4385
R11 220Ω 2W
T1
RED
+128V
C8 50
BLACK
C1 .001
D1 IN34A
A.F.
R.F.
SW-1
RED
GREEN
12.6V 1AMP.
GREEN
BLACK
D2 IN34A
BLACK
RED
SW-4
R18 50K
C11 .2
R17 1MEG
BLACK
RED
T3
SW-3b
R14 3.3MEG
C10 .001
SW-3a
R15 10K
C9 50
R16 680K
R12 1MEG
+126V
+17V
V3 1629
R13 330K
SCHEMATIC DIAGRAM
SIGNAL TRACER
MODEL ST-2
* SWITCH POS.
TRACE - 1.6 V.D.C. at 0° SHADOW ANGLE
WATTMETER - 5.6 V.D.C. at 0° SHADOW ANGLE
NOTE - SWITCHES ARE VIEWED FROM FRONT AND FULLY COUNTERCLOCKWISE (OFF POS.)
- ALL CAPACITOR VALUES ARE IN MICROFARADS
- ALL RESISTORS ARE 1/2 WATT UNLESS OTHERWISE NOTED
- ALL VOLTAGE READINGS ARE D.C. ± 10%, MEASURED WITH A V.T.V.M. TO CHASSIS GND. WITH INPUT SHORTED.