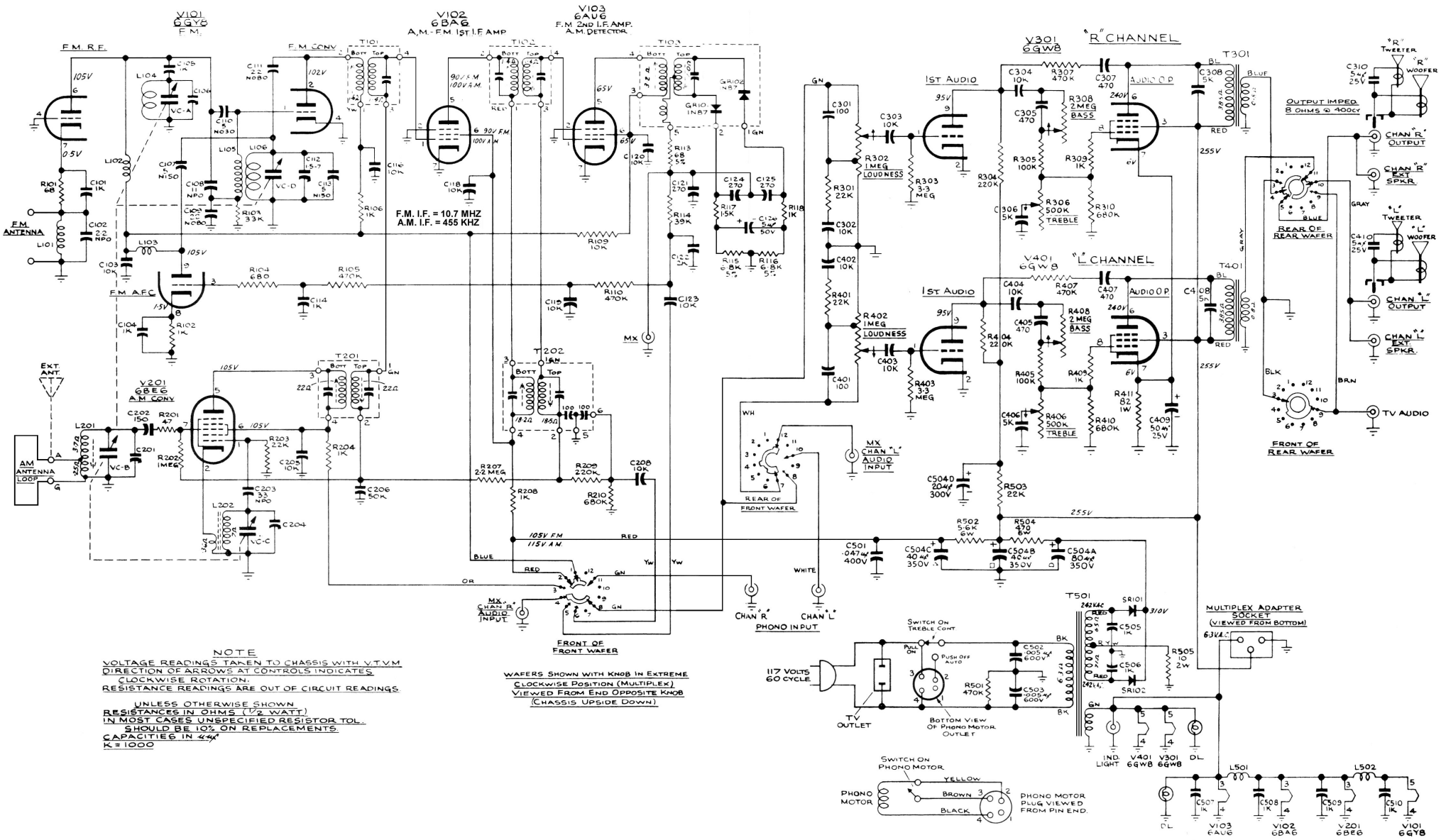

Sparton 2307 (Used in 3 Way Combinations 2301, 2302, 2304)