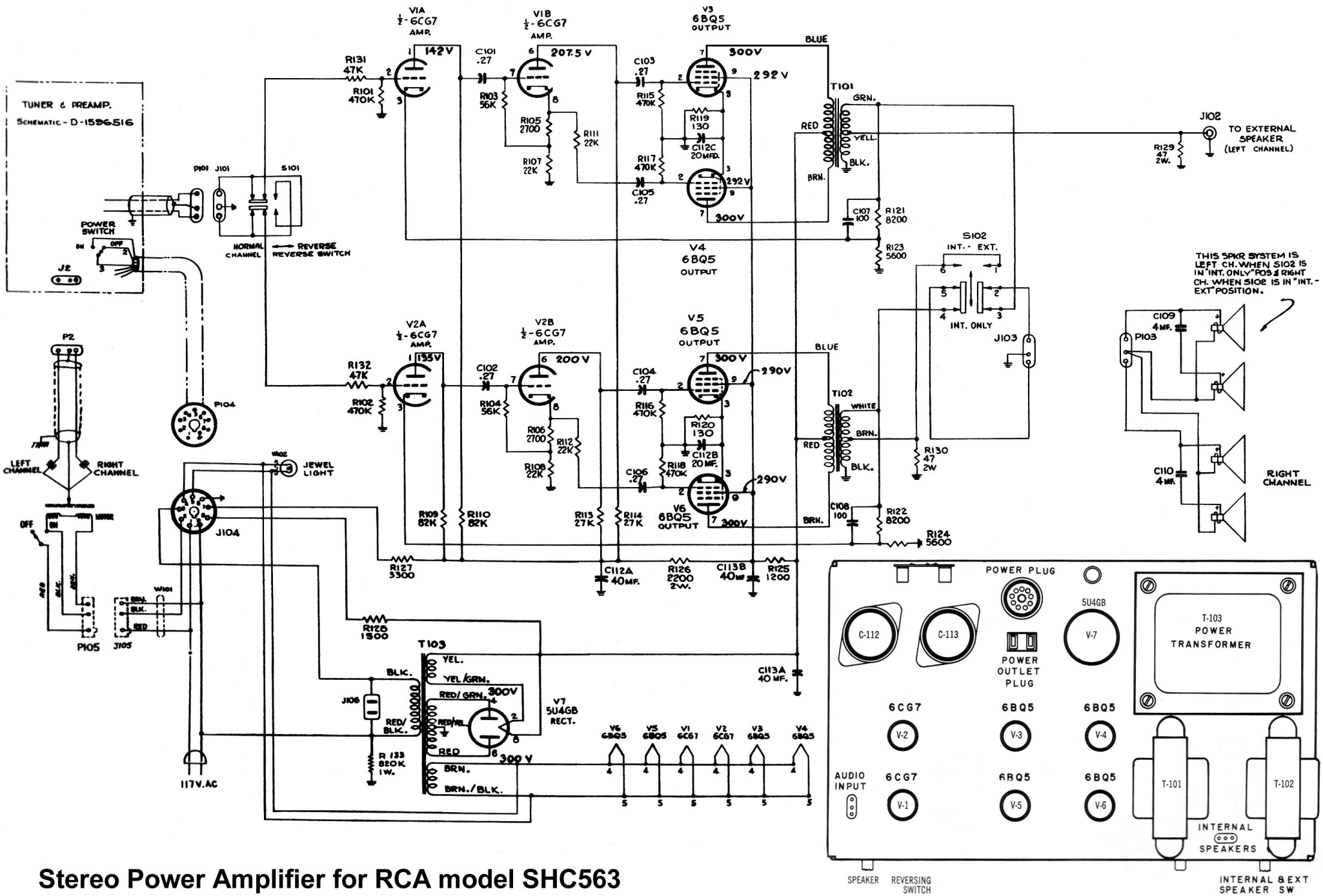

Stereo Power Amplifier for RCA model SHC563