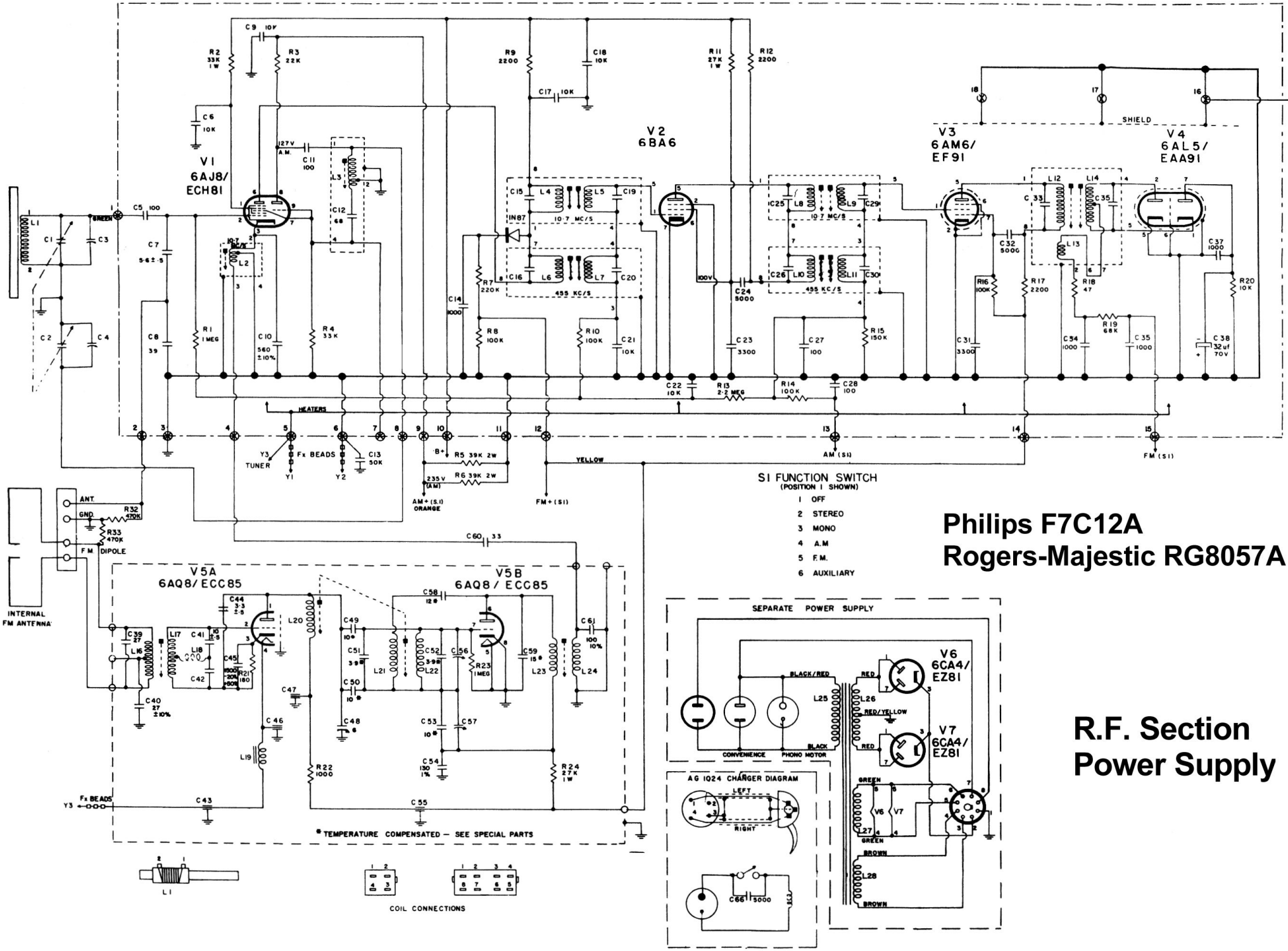

Philips F7C12A
Rogers-Majestic RG8057A

R.F. Section
Power Supply

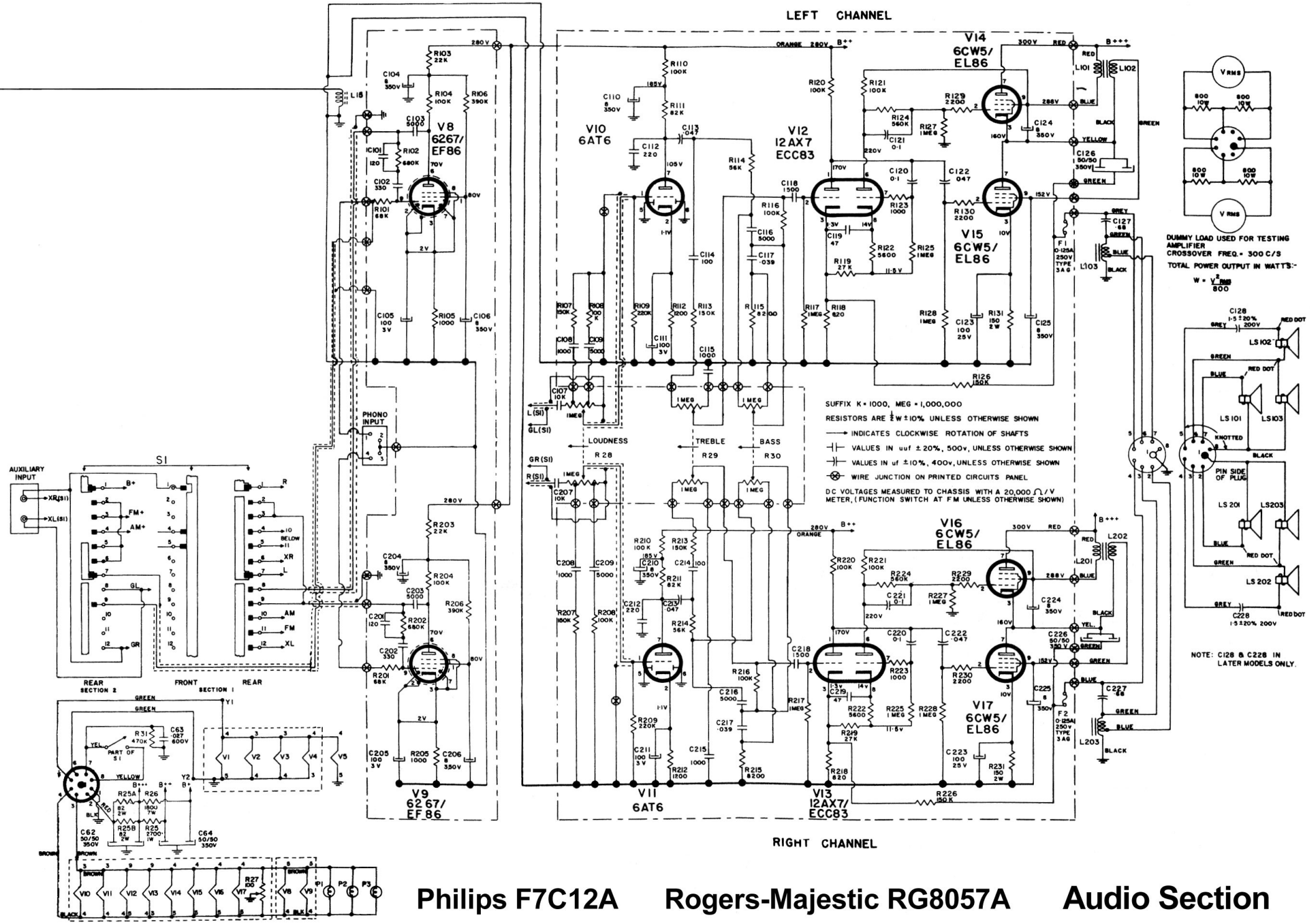

Philips F7C12A Rogers-Majestic RG8057A Audio Section