* A number of circuit changes were made on chassis of run No. 5 and above. This run number is rubber stamped in a star on the back of the chassis. Refering to Figs 2 and 3, the condenser (27) connects to the B- end of resistor (36) instead of to ground. The bucking coil - that section of (30) in series with the voice coil - is shorted out. The 10 mfd. dry electrolytic condenser (37) is eliminated, and replaced with a substitute .015 section combined with (32), part 3793R. The .01 mfd. condenser (38) is eliminated. The positions of (19) (26) and (36) are changed in the chassis from that shown in Fig. 3.

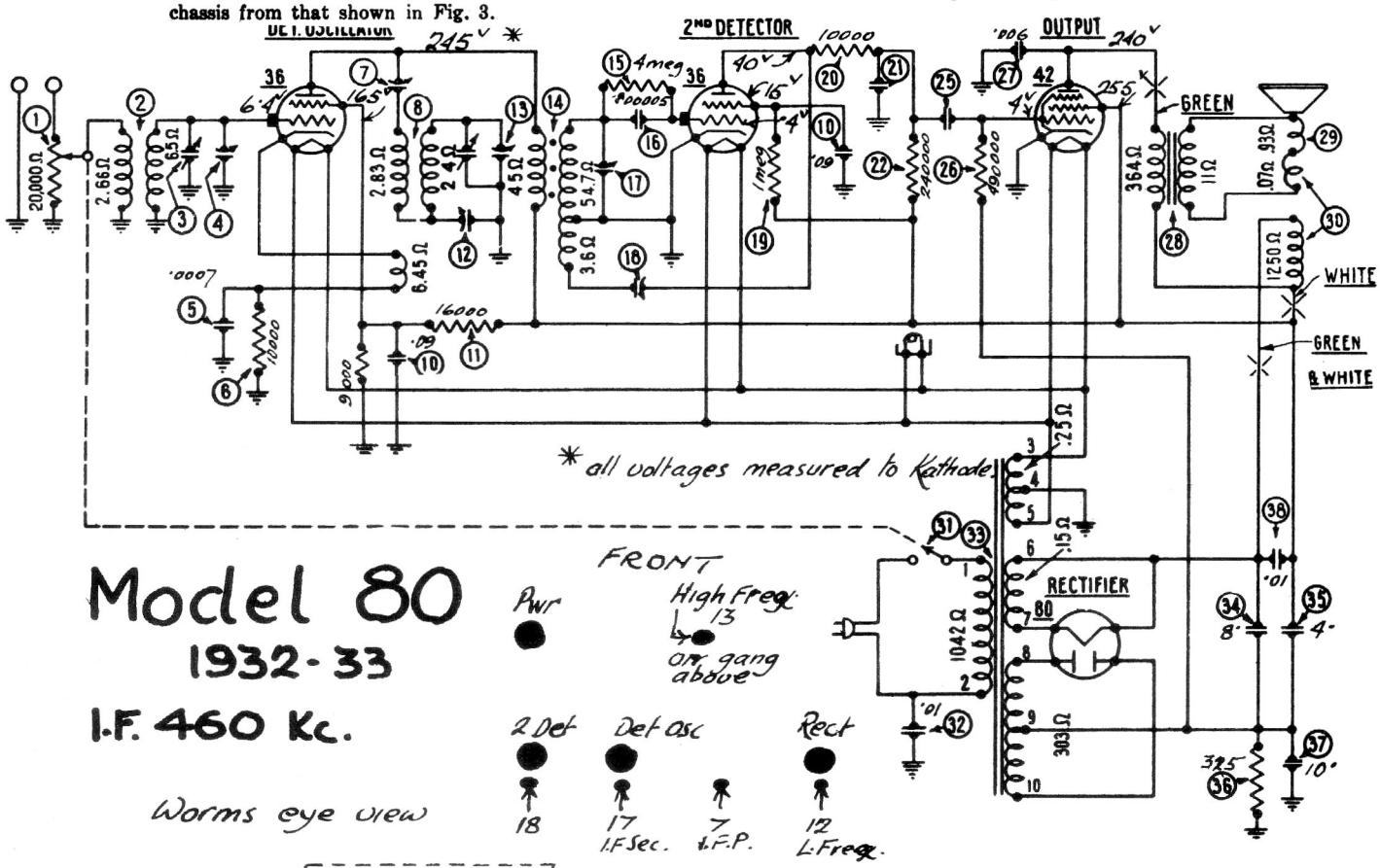

Model 80

1932-33

I.F. 460 Kc.

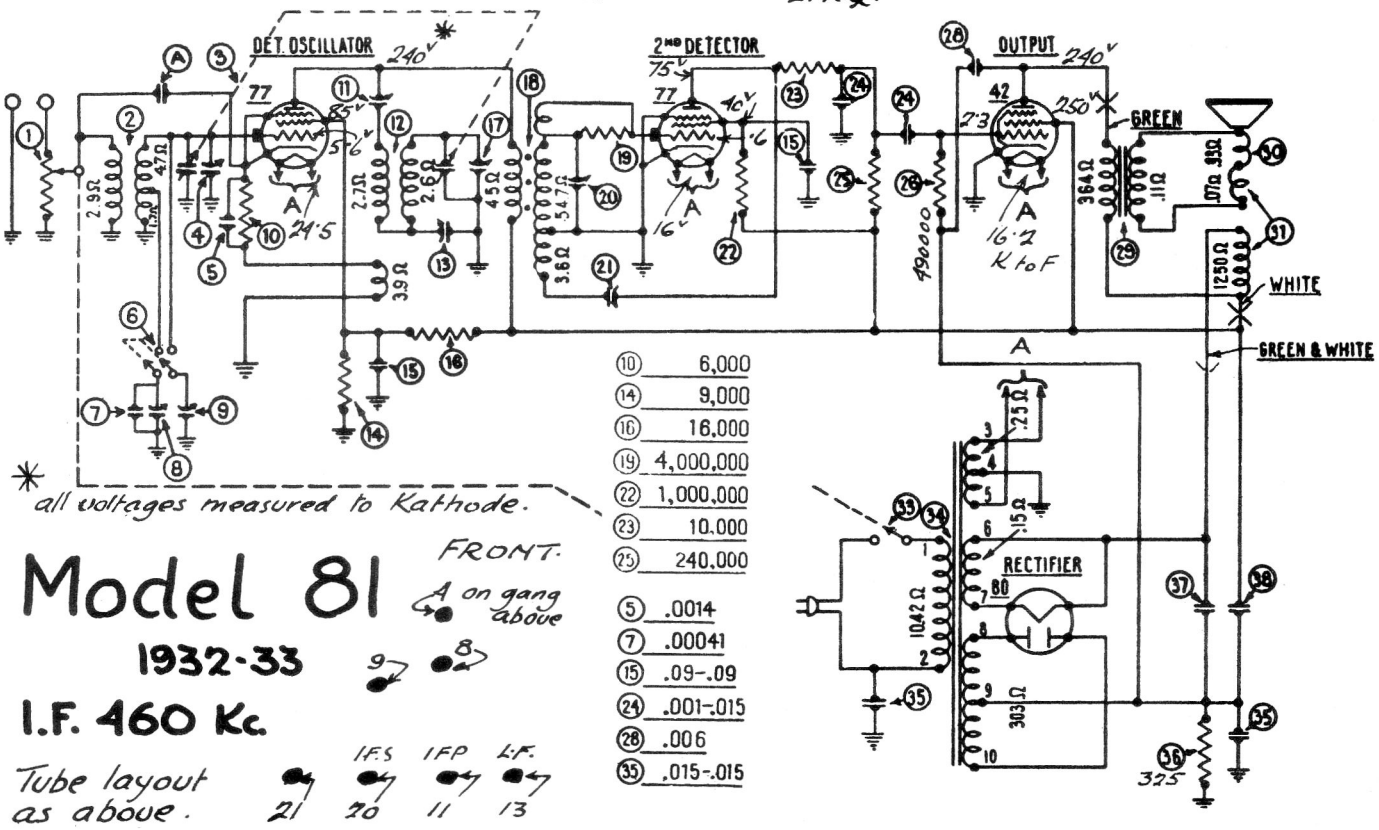

(10)	6,000
(14)	9,000
(16)	16,000
(19)	4,000,000
(22)	1,000,000
(23)	10,000
(25)	240,000
(5)	.0014
(7)	.00041
(15)	.09-.09
(24)	.001-.015
(28)	.006
(35)	.015-.015

Model 81

1932-33

I.F. 460 Kc.

DATA SHEET

PRINTED IN CANADA

COURTESY PHILCO-24 PRODUCTS LTD.