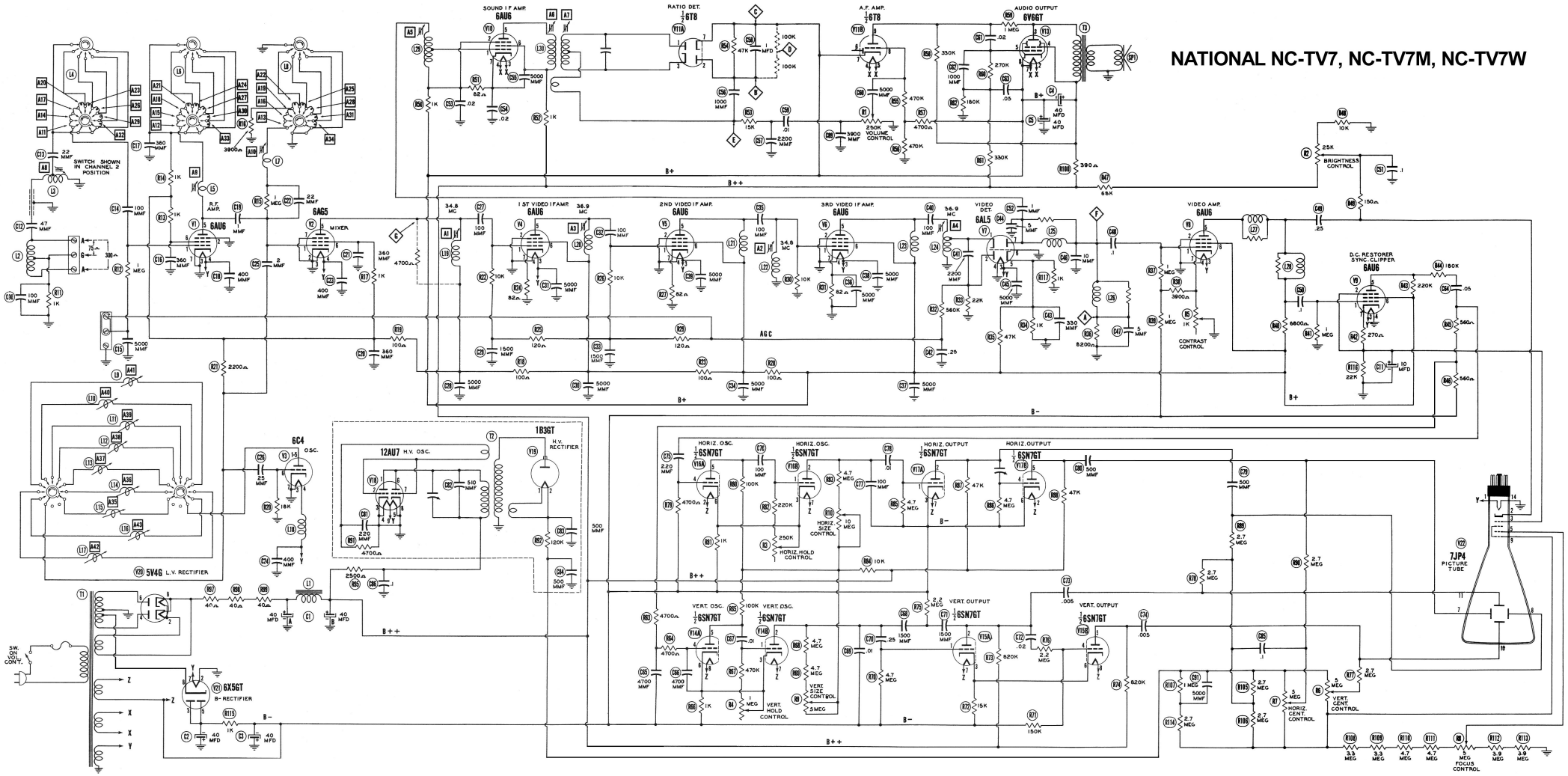NATIONAL NC-TV7, NC-TV7M, NC-TV7W